US007577703B2

(12) **United States Patent**
Boucher et al.

(10) **Patent No.: US 7,577,703 B2**
(45) **Date of Patent: Aug. 18, 2009**

(54) **STORE AND FORWARD ARCHITECTURE**

(75) Inventors: **Antoine Boucher**, London (CA); **Peter Coumans**, London (CA); **Peter Scheyen**, London (CA); **Brent Elphick**, London (CA); **Vasanthan Gunaratnam**, Toronto (CA); **Allan Lodberg**, London (CA)

(73) Assignee: **TVWorks, LLC**, Philadelphia, PA (US)

(*) Notice: Subject to any disclaimer, the term of this patent is extended or adjusted under 35 U.S.C. 154(b) by 115 days.

(21) Appl. No.: **11/318,892**

(22) Filed: **Dec. 27, 2005**

(65) **Prior Publication Data**

US 2006/0101153 A1 May 11, 2006

Related U.S. Application Data

(63) Continuation of application No. 10/142,553, filed on May 9, 2002, now abandoned.

(51) **Int. Cl.**
G06F 15/16 (2006.01)

(52) **U.S. Cl.** **709/203**; 725/68; 725/110

(58) **Field of Classification Search** 709/203, 709/230; 725/68, 110
See application file for complete search history.

(56) **References Cited**

U.S. PATENT DOCUMENTS

6,327,625 B1 * 12/2001 Wang et al. 709/235
6,529,932 B1 * 3/2003 Dadiomov et al. 718/101
6,622,925 B2 * 9/2003 Carner et al. ..... 236/46 R
6,704,768 B1 * 3/2004 Zombek et al. 709/201
2002/0019848 A1 * 2/2002 Sugawara et al. 709/206
2002/0052968 A1 * 5/2002 Bonefas et al. 709/231
2002/0147645 A1 * 10/2002 Alao et al. 705/14
2002/0152299 A1 * 10/2002 Traversat et al. 709/223
2002/0169885 A1 * 11/2002 Alao et al. 709/230
2003/0172181 A1 * 9/2003 Sharma 709/238

OTHER PUBLICATIONS

Qayyum H., Using IVDS and VBI for Interactive Television, Consumer Electronic, IEEE Transactions on vol. 42, issue 3, Aug. 1996, pp. 657-666.*
Sermersheim, J. Lightweight Directory Access Protocol (v3). Jan. 2001.*

* cited by examiner

Primary Examiner—Andrew Caldwell
Assistant Examiner—John M MacIlwinen
(74) *Attorney, Agent, or Firm*—Banner & Witcoff

(57) **ABSTRACT**

A store and forward (S&F) architecture is provided that supports multiple applications within an extensible network to direct information of various formats to any of multiple destinations. In the presently preferred embodiment of the invention, Java applications running on a client send non-priority data to any server on the application network or, alternatively, anywhere on a global telecommunications network such as the Internet, at some time in the future. In the preferred embodiment, S&F allows a client application to send usage statistics to a database on the application network. It also enables T-commerce purchases to be made by the user, where the purchase and other relevant information is sent to a destination web server as if the purchase had taken place on the web via a full web browser on an Internet-connected PC.

21 Claims, 11 Drawing Sheets

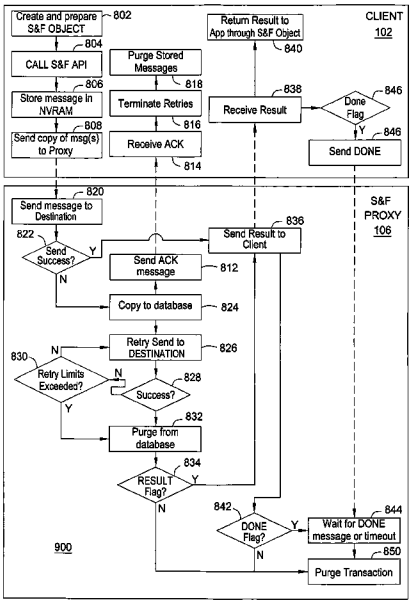

EX1068
Roku v. Media Chain
U.S. Patent No. 9,898,590

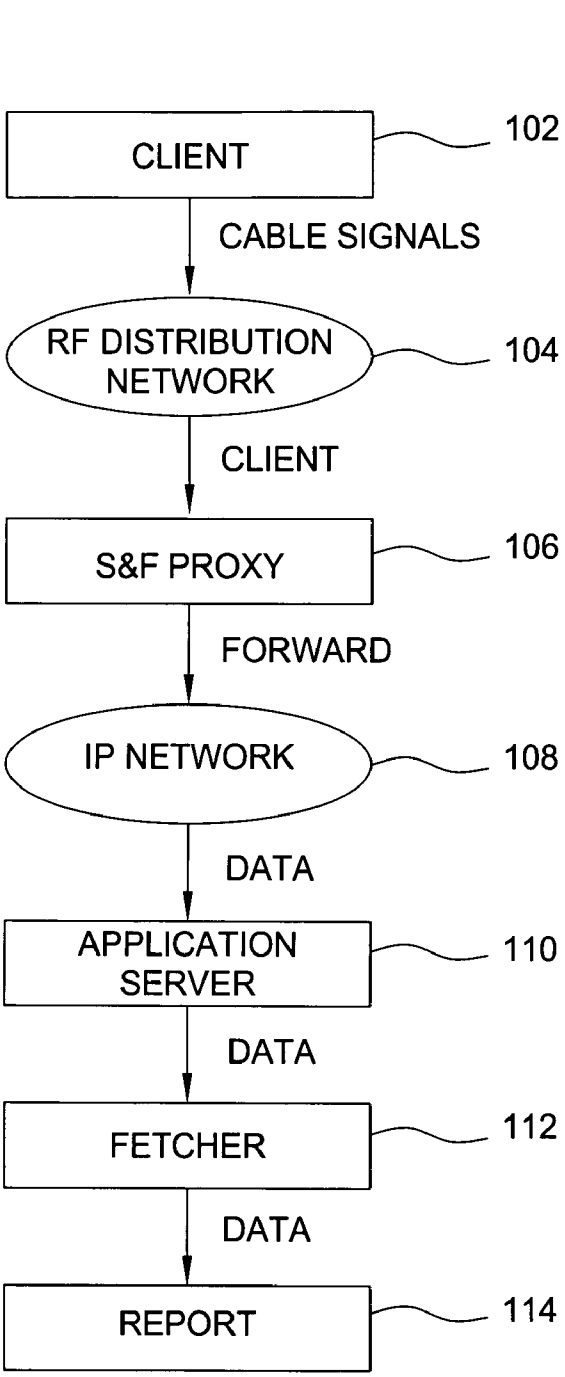
100
CLIENT
102
CABLE SIGNALS
RF DISTRIBUTION NETWORK
104
CLIENT
S&F PROXY
106
FORWARD
IP NETWORK
108
DATA
APPLICATION SERVER
110
DATA
FETCHER
112
DATA
REPORT
114

FIG. 1A

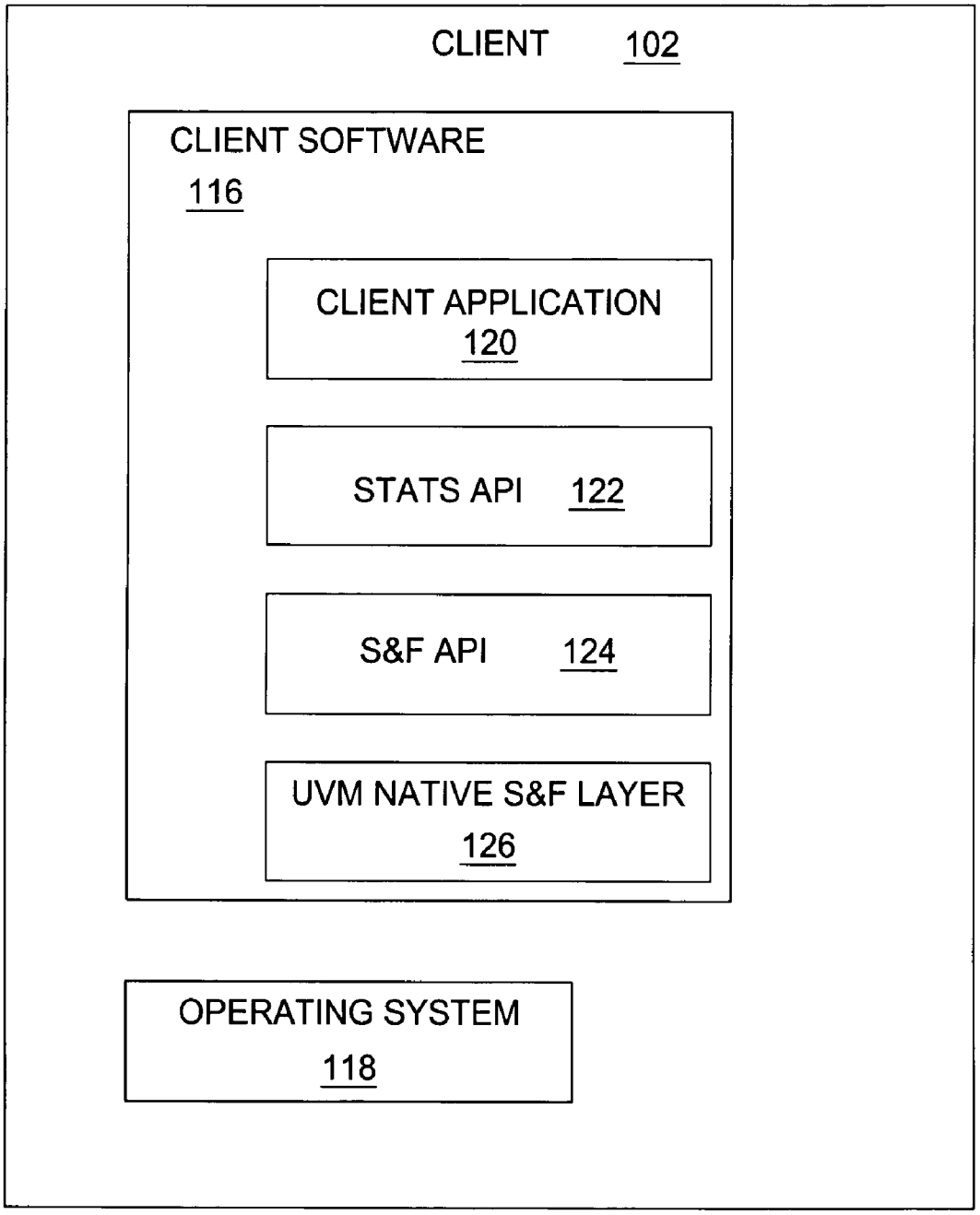
CLIENT 102
CLIENT SOFTWARE
116
CLIENT APPLICATION
120
STATS API 122
S&F API 124
UVM NATIVE S&F LAYER
126
OPERATING SYSTEM
118

FIG. 1B

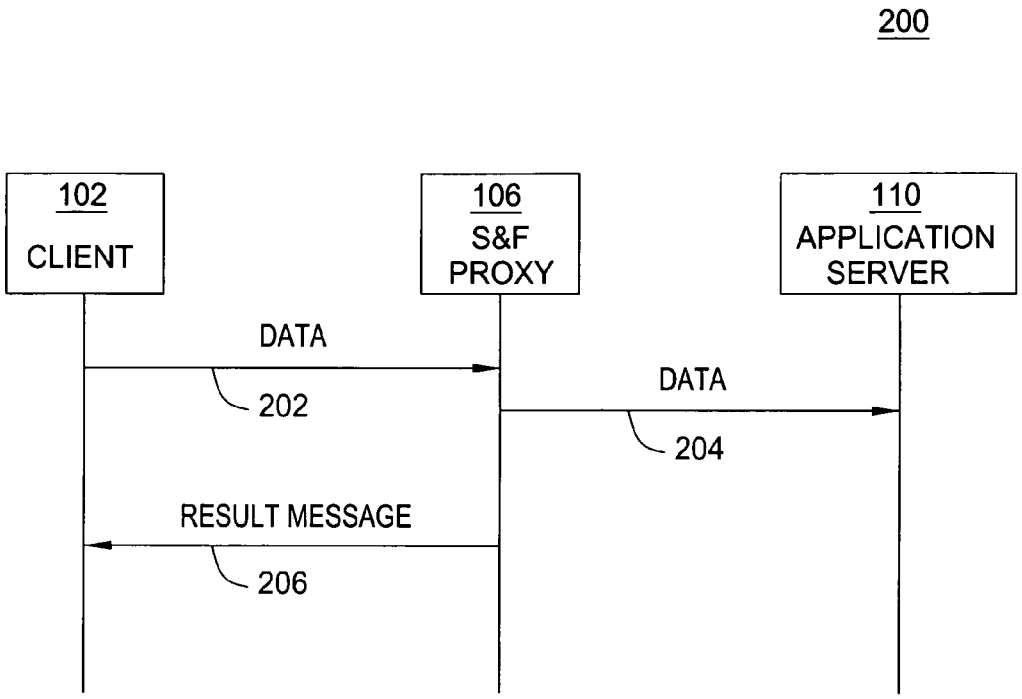
200
102
CLIENT
106
S&F
PROXY
110
APPLICATION
SERVER
DATA
202
DATA
204
RESULT MESSAGE
206

FIG. 2

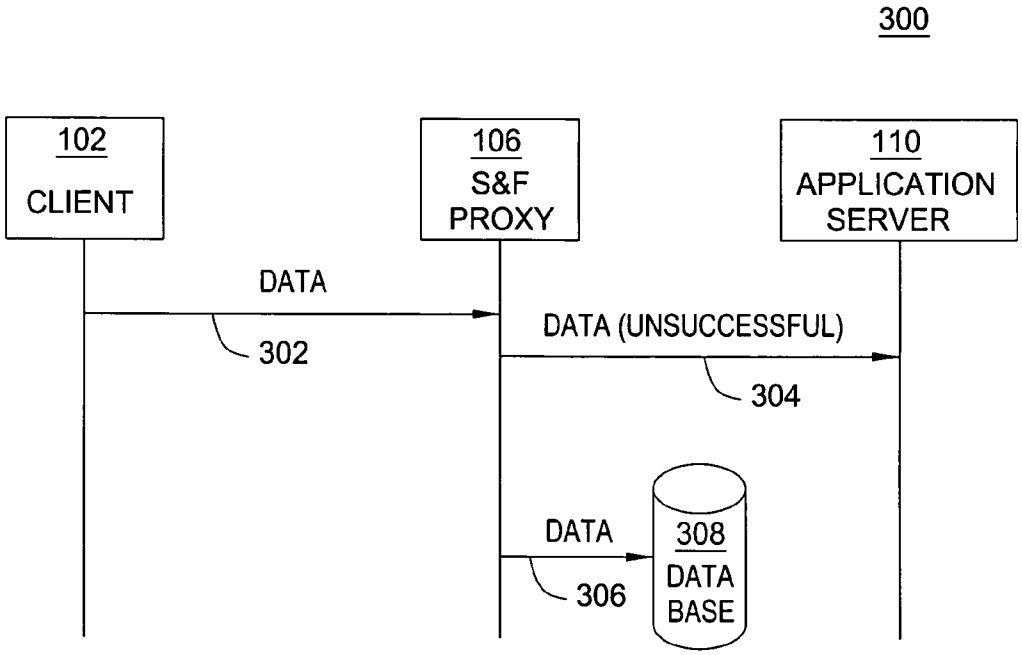
300
102
CLIENT
106
S&F
PROXY
110
APPLICATION
SERVER
DATA
302
DATA (UNSUCCESSFUL)
304
DATA
306
308
DATA
BASE

FIG. 3A

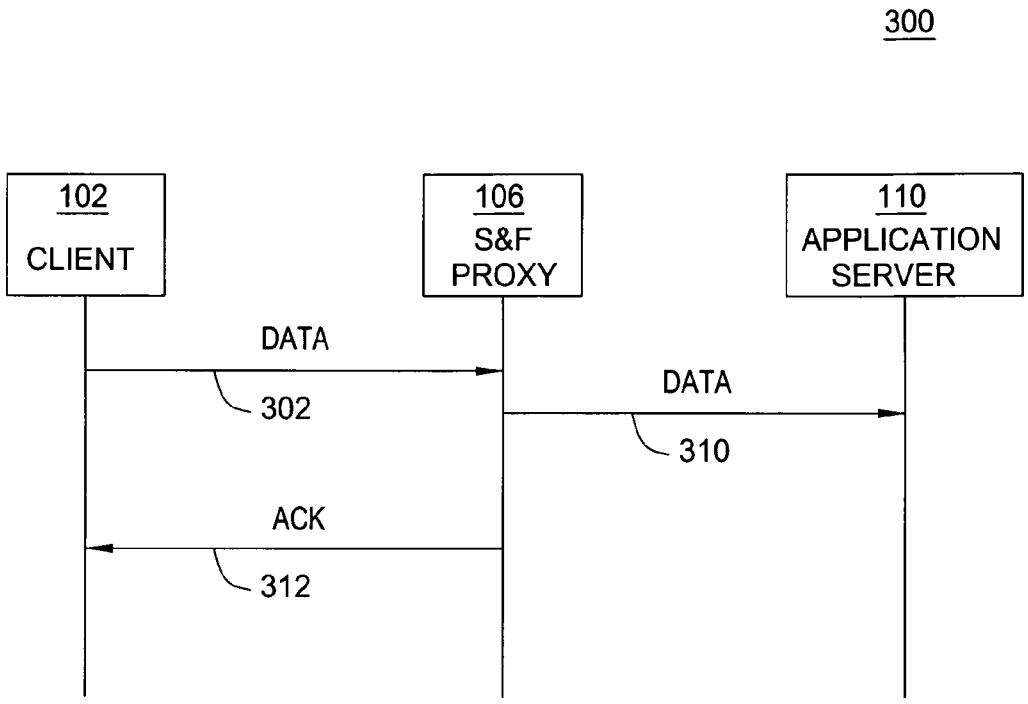
300
102
CLIENT
106
S&F
PROXY
110
APPLICATION
SERVER
DATA
302
DATA
310
ACK
312

FIG. 3B

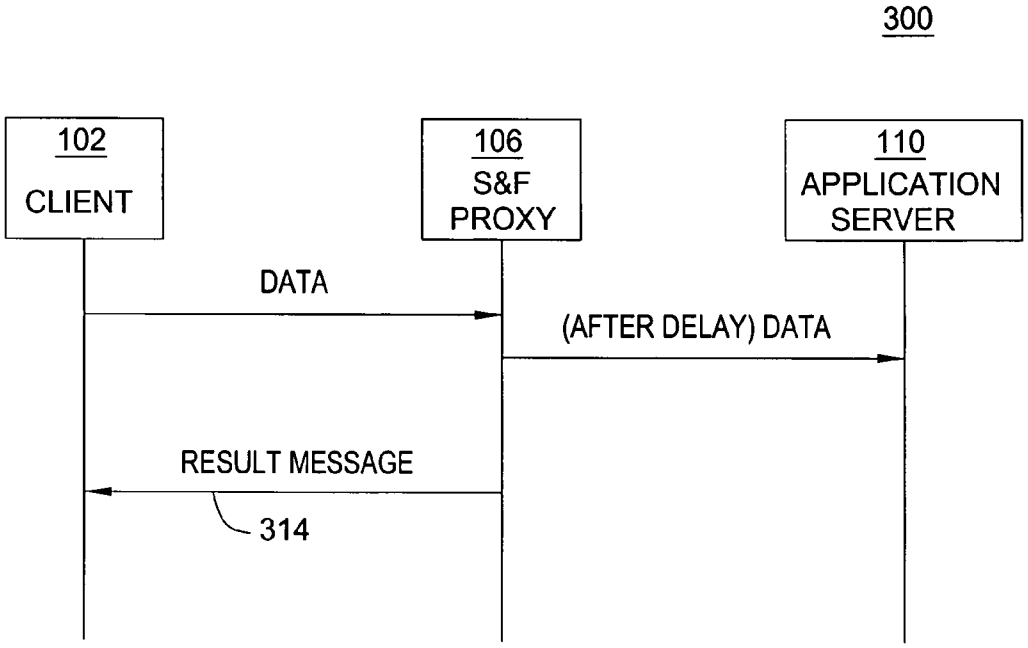
300
102
CLIENT
106
S&F
PROXY
110
APPLICATION
SERVER
DATA
(AFTER DELAY) DATA
RESULT MESSAGE
314

FIG. 3C

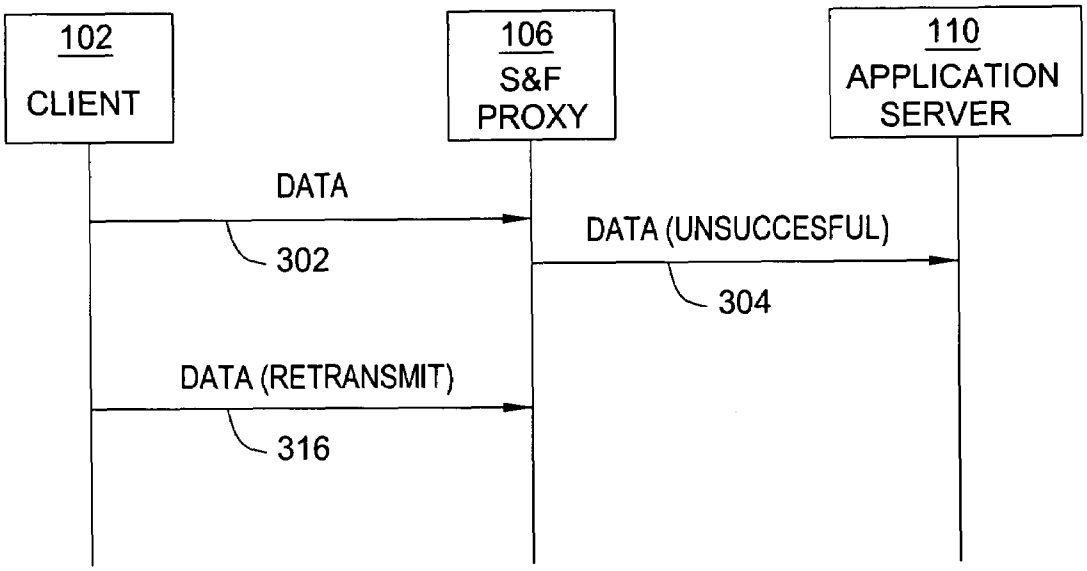
102
CLIENT
106
S&F
PROXY
110
APPLICATION
SERVER
DATA
302
DATA (UNSUCCESFUL)
304
DATA (RETRANSMIT)
316

FIG. 3D

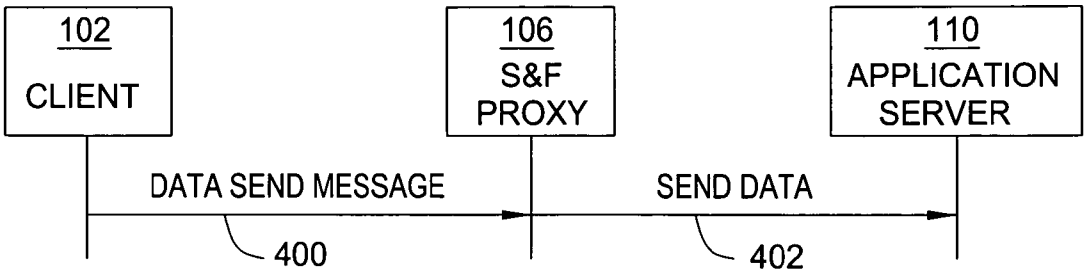

FIG. 4A

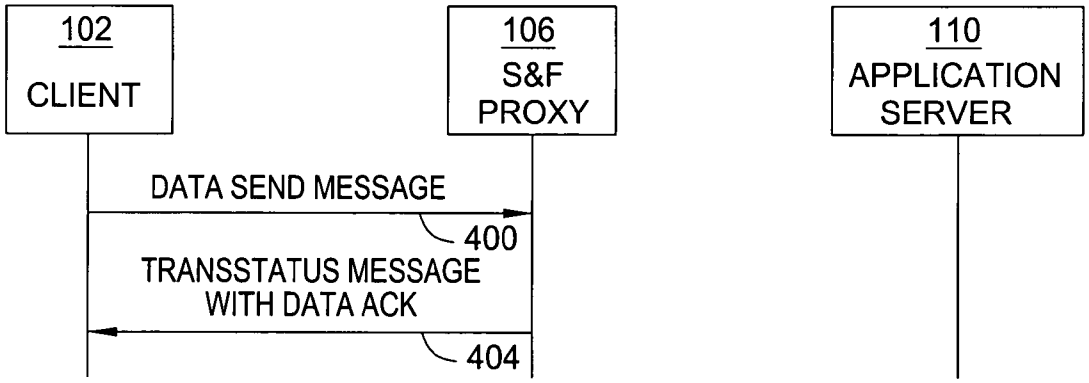

FIG. 4B

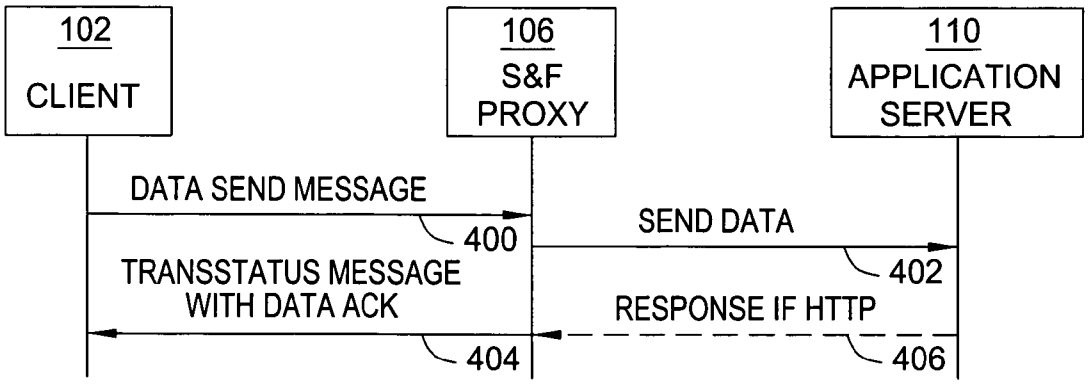

FIG. 4C

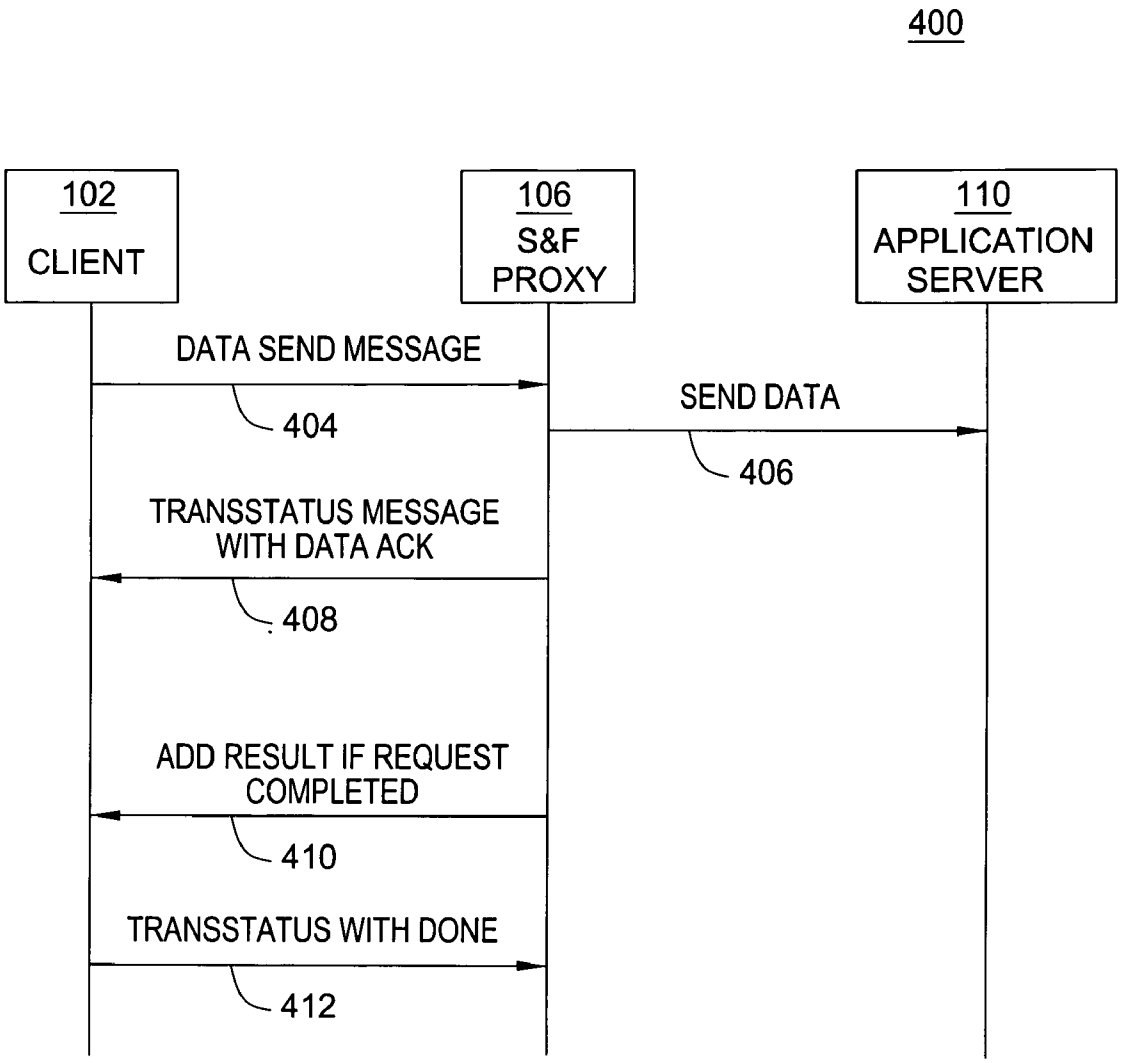
400
102
CLIENT
106
S&F
PROXY
110
APPLICATION
SERVER
DATA SEND MESSAGE
404
SEND DATA
406
TRANSSTATUS MESSAGE
WITH DATA ACK
408
ADD RESULT IF REQUEST
COMPLETED
410
TRANSSTATUS WITH DONE
412

FIG. 4D

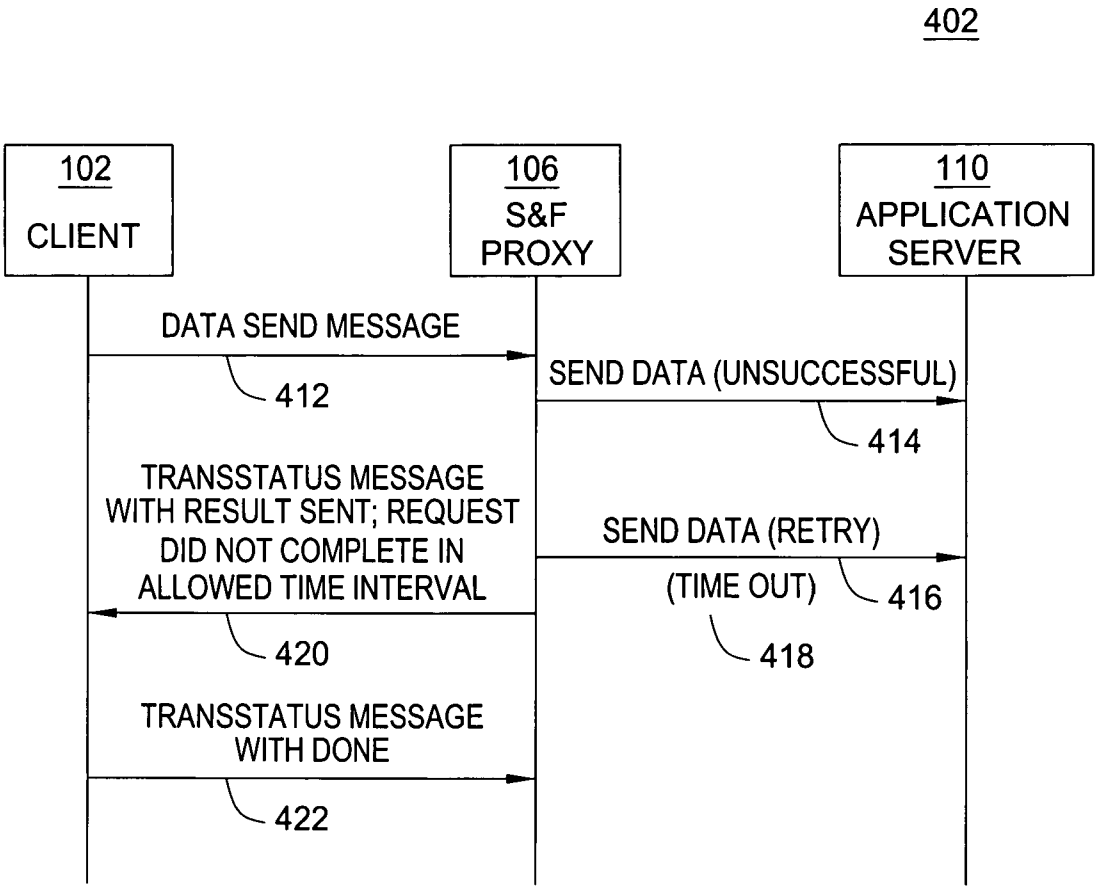
402
102
CLIENT
106
S&F
PROXY
110
APPLICATION
SERVER
DATA SEND MESSAGE
412
SEND DATA (UNSUCCESSFUL)
414
TRANSSTATUS MESSAGE
WITH RESULT SENT; REQUEST
DID NOT COMPLETE IN
ALLOWED TIME INTERVAL
SEND DATA (RETRY)
(TIME OUT)
416
420
418
TRANSSTATUS MESSAGE
WITH DONE
422

FIG. 4E

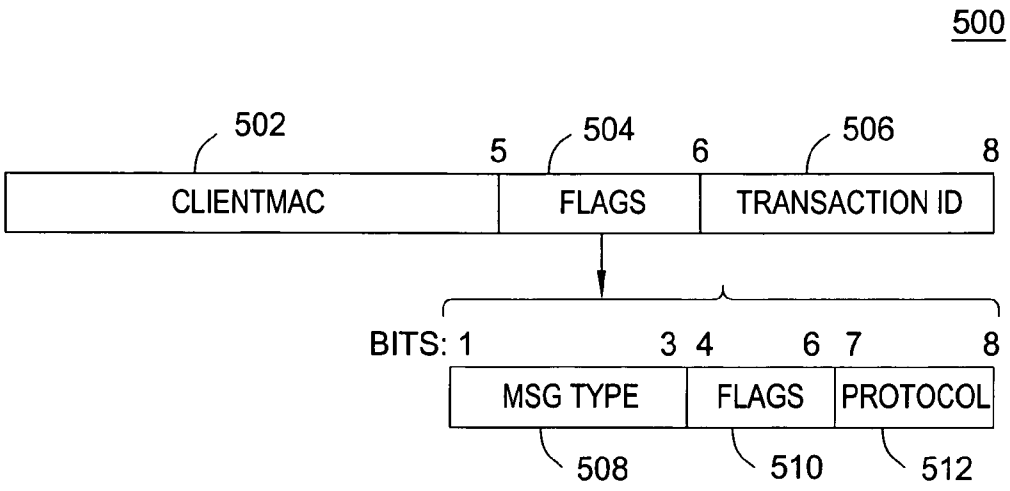

FIG. 5

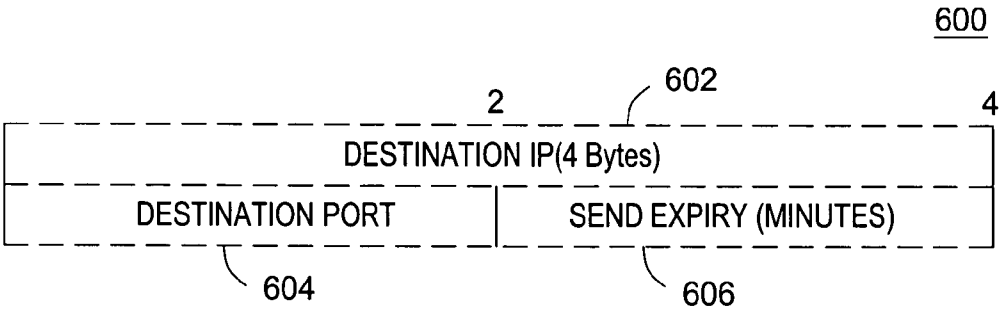

FIG. 6

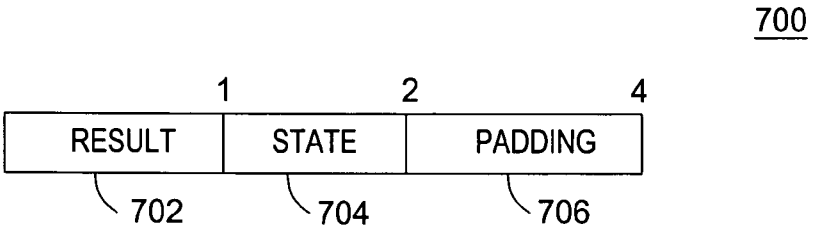

FIG. 7

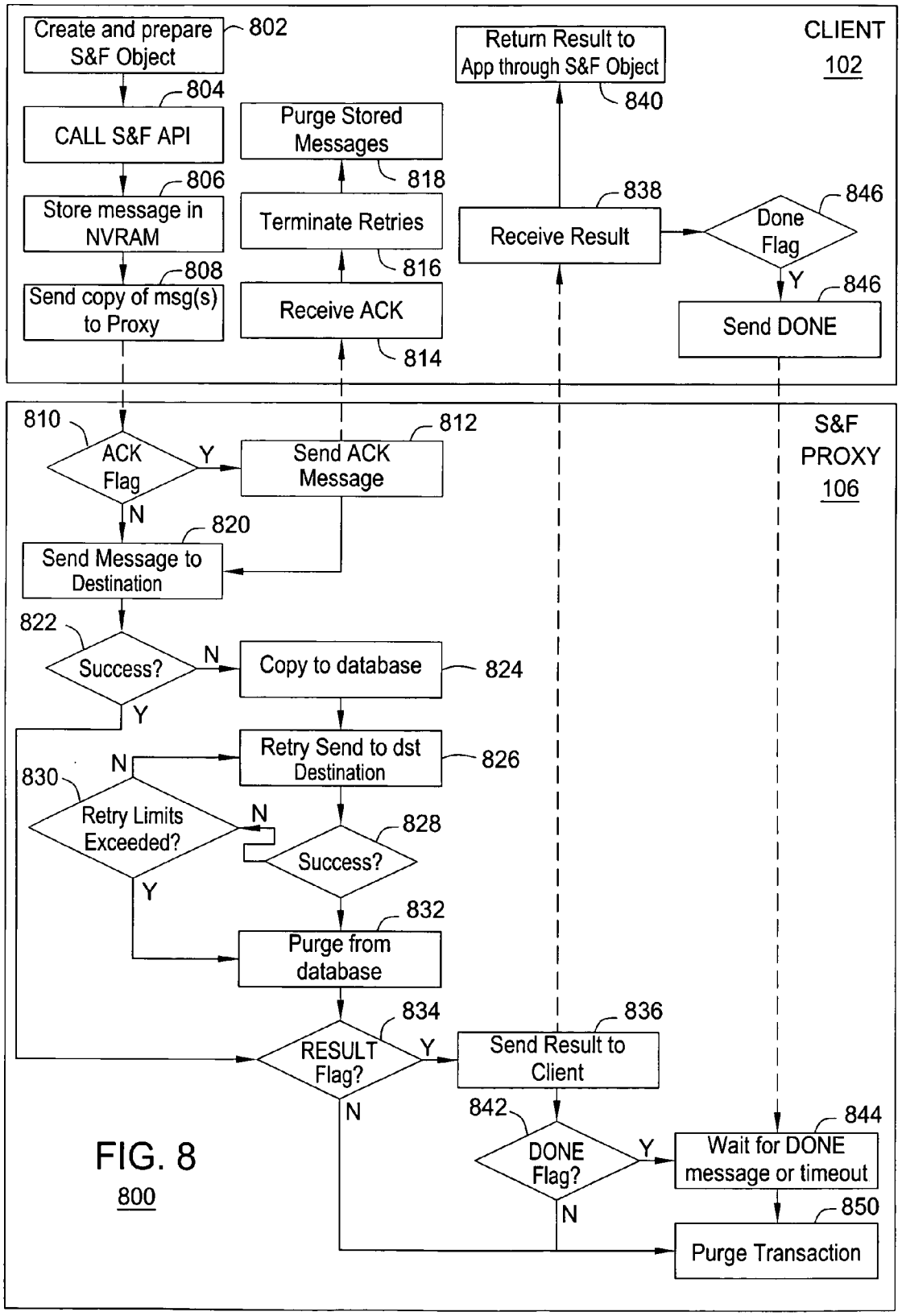
CLIENT
102
Create and prepare S&F Object
802
CALL S&F API
804
Store message in NVRAM
806
Send copy of msg(s) to Proxy
808
Purge Stored Messages
818
Terminate Retries
816
Receive ACK
814
Return Result to App through S&F Object
840
Receive Result
838
Done Flag
846
Y
Send DONE
846
S&F PROXY
106
ACK Flag
810
Y
N
Send ACK Message
812
Send Message to Destination
820
Success?
822
N
Y
Copy to database
824
Retry Send to dst Destination
826
Retry Limits Exceeded?
830
N
Y
Success?
828
Purge from database
832
RESULT Flag?
834
Y
N
Send Result to Client
836
DONE Flag?
842
Y
N
Wait for DONE message or timeout
844
Purge Transaction
850

FIG. 8
800

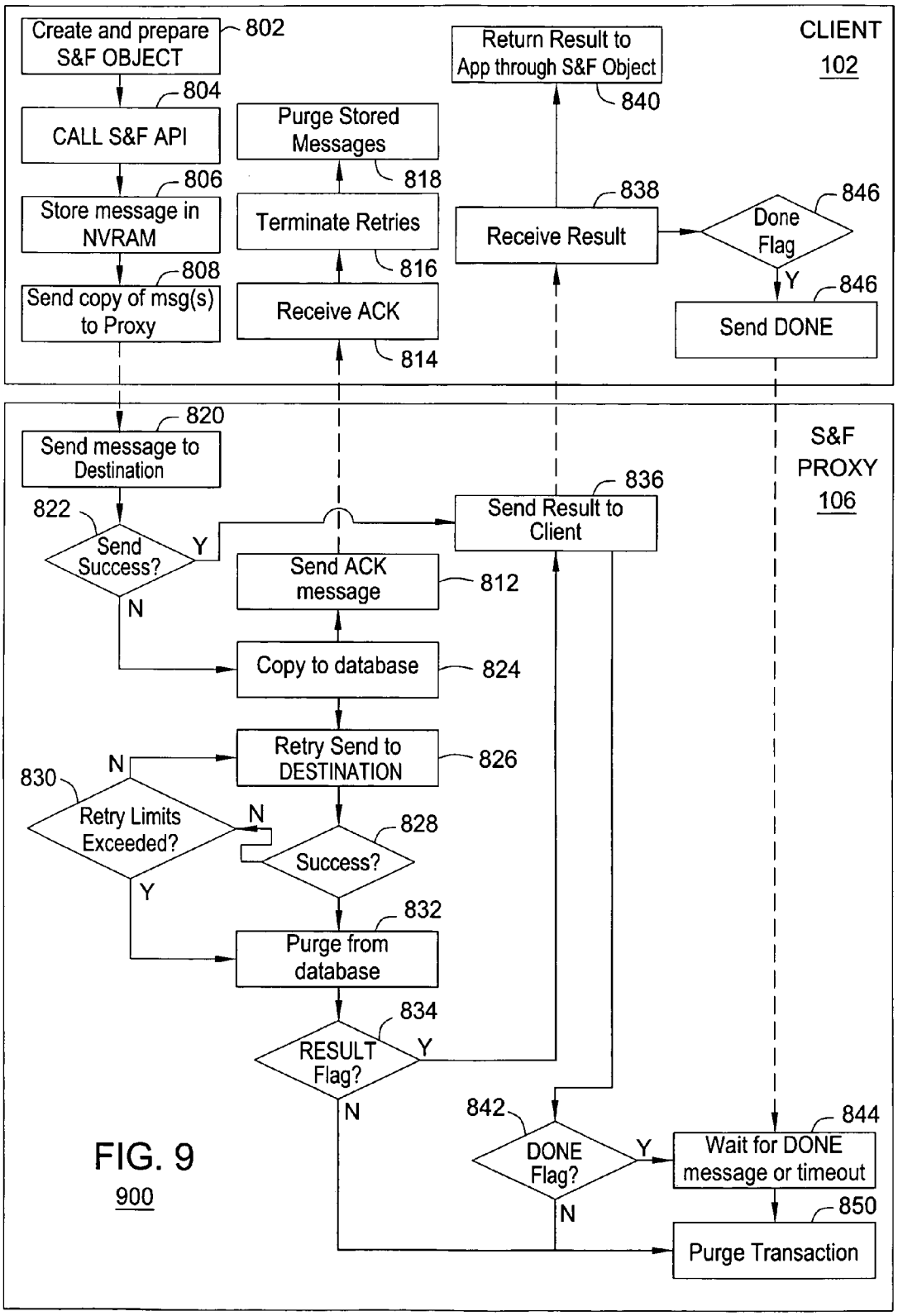
CLIENT
102
Create and prepare S&F OBJECT
802
CALL S&F API
804
Store message in NVRAM
806
Send copy of msg(s) to Proxy
808
Purge Stored Messages
818
Terminate Retries
816
Receive ACK
814
Return Result to App through S&F Object
840
Receive Result
838
Done Flag
846
Y
Send DONE
846
S&F PROXY
106
Send message to Destination
820
Send Success?
822
Y
N
Send Result to Client
836
Send ACK message
812
Copy to database
824
Retry Send to DESTINATION
826
Retry Limits Exceeded?
830
N
Y
Success?
828
Purge from database
832
RESULT Flag?
834
Y
N
DONE Flag?
842
Y
N
Wait for DONE message or timeout
844
Purge Transaction
850

FIG. 9
900

STORE AND FORWARD ARCHITECTURE

CROSS REFERENCE TO RELATED APPLICATIONS

This application is a continuation of U.S. patent application Ser. No. 10/142,553, filed May, 9, 2002 now abandoned.

BACKGROUND OF THE INVENTION

1. Technical Field

The invention generally relates to communications systems. More particularly, the invention generally relates to store and forward architecture.

2. Description of the Prior Art

The term "store and forward architecture" pertains to communications systems in which messages are received at intermediate routing points and recorded (i.e., stored) and then transmitted (i.e., forwarded) to the next routing point or to the ultimate recipient. Such systems are commonly used in the cable and satellite television industry. For example, DirecTV operates a satellite television system that offers such services as Pay-Per-View. In Pay-Per-View mode, a subscriber to DirecTV selects a program to be purchased and viewed. The subscriber typically has a set top box (e.g., a satellite receiver in the case of DirecTV) that contains information about the subscriber's privileges and, if the subscriber is authorized to purchase Pay-Per-View broadcasts, the set top box decodes the program selected by the subscriber for viewing when it is broadcast (e.g., via the DirecTV satellite). The set top box captures information with regard to the purchase (i.e., it stores purchase information for billing purposes). At an appropriate time, (e.g., during a regularly scheduled upstream communication from the set top box to DirecTV, such as a telephone call) the set top box sends this purchase information to the Pay-Per-View service (i.e., it forwards this stored information to DirecTV to allow the subscriber's account to be billed for their purchase of the program which they selected and viewed).

While such systems provide an effective approach to a dedicated application, (e.g., Pay-Per-View services) they are not useful or readily configurable for execution of multiple applications (e.g., Pay-Per-View and messaging and shopping). Further, such known systems operate within the confines of a well-defined network architecture (e.g. the Pay-Per-View server and associated network elements). Thus, they are not easily reconfigured to provide disparate services over an extended or extensible network. They cannot discern whether one destination within the network is more appropriate than another, because they are set to communicate with a specified destination for a dedicated purpose. They are, therefore, not agile at routing information among multiple destinations. Finally, such known systems operate within specified parameters that treat all communications in a similar fashion because all communications relate to the same thing, (e.g., Pay-Per-View). Thus, there is no notion of scheduling events, such as upward communication, based upon the nature of information to be communicated, nor are different information formats or protocols handled well within such known systems.

It would be advantageous to provide a store and forward system that supported multiple applications within an extensible network to direct information of various formats to any of multiple destinations.

SUMMARY OF THE INVENTION

Exemplary embodiments include methods and systems for a store and forward (S&F) architecture that supports multiple applications within an extensible network to direct information of various formats to any of multiple destinations. In one embodiment of the invention, Java applications running on a client send non-priority data to any server on the application network or, alternatively, anywhere on a global telecommunications network (e.g., the Internet), at some time in the future.

One embodiment is a method for an S&F system that allows a client application to send usage statistics to a database on the application network. It also enables television-based commerce (T-commerce) purchases of products via interaction with the T.V. to be made by the user, where the purchase and other relevant information is sent to a destination web server as if the purchase had taken place on the web via a full web browser on an Internet-connected personal computer (PC).

One exemplary embodiment is an S&F system, including: client-side code in a micro Java virtual machine, a Java byte code execution engine (i.e., a user space virtual machine, (UVM)), and a server-side proxy server process, communications networks, and a server-side Application server process. One communications network transports information from the client to the S&F proxy (e.g., a real-time two-way radio frequency (RF) network). Another communications network transports information from the S&F proxy to the Application Server process (e.g., an Internet protocol (IP) network).

BRIEF DESCRIPTION OF THE DRAWINGS

FIG. **1**A is a block schematic diagram that shows an exemplary embodiment of a store and forward logical architecture and data flow, according to the invention;

FIG. **1**B is a block schematic diagram showing the client of FIG. **1**A in more detail;

FIG. **2** is a flow diagram showing an exemplary embodiment of a method of providing communication sessions between the client and the application server via the S&F proxy;

FIGS. **3**A-**3**D are flow diagrams showing an exemplary embodiment of a method of providing communication sessions;

FIG. **4**A is a flow diagram showing the messages that are exchanged when no flags are set, in an exemplary embodiment;

FIG. **4**B is a flow diagram showing the messages that are exchanged when the SEND_DATA_ACK flag is set, in an exemplary embodiment;

FIG. **4**C is a flow diagram showing the messages that are exchanged when the SEND_RESULT flag is set, in an exemplary embodiment;

FIG. **4**D is a flow diagram showing the messages that are exchanged with the DATA_ACK, SEND_RESULT, and SEND_DONE flags are set, in an exemplary embodiment;

FIG. **4**E is a flow diagram showing the messages that are exchanged with the DATA_ACK, SEND_RESULT, and SEND_DONE flags are set when the send is unsuccessful and times out after retrying, in an exemplary embodiment;

FIG. **5** is a block schematic diagram that shows an exemplary embodiment of a header that is sent at the start of every message, both from the client to the proxy and from the proxy down to the client, according to the invention;

FIG. **6** is a block schematic diagram that shows an exemplary embodiment of a data request message that is included after the common data header, according to the invention;

FIG. **7** is a block schematic diagram that shows an exemplary embodiment of a message that is sent by the proxy to the client for the purposes of an acknowledgement and to send the result of the transaction;

FIG. **8** is a block schematic diagram that shows an exemplary embodiment of a method of implementing a no delayed acknowledgement (ACK) scheme; and

FIG. **9** is a block schematic diagram that shows an exemplary embodiment **900** of a method of implementing a delayed acknowledgement (ACK) scheme.

DETAILED DESCRIPTION OF THE INVENTION

Exemplary embodiments of the invention provide a store and forward (S&F) system and methods to support multiple applications within an extensible network to direct information of various formats to any of multiple destinations. In one embodiment, Java applications running on a client send non-priority data to any server on the application network or, alternatively, anywhere on a global telecommunications network such as the Internet, at some time in the future. The S&F system has many applications, including collecting statistics and T-commerce.

In one embodiment, the S&F system allows a client application to send usage statistics to a database on the application network. It also enables T-commerce purchases to be made by the user, where the purchase and other relevant information is sent to a destination web server as if the purchase had taken place on the web via a full web browser on an Internet-connected PC. This embodiment includes two distinct parts: client-side code in the UVM; and a server-side proxy server process.

Architectural Overview

FIG. **1**A is a block schematic diagram showing an exemplary embodiment **100** of a store and forward logical architecture and data flow, according to the invention. In this exemplary embodiment **100**, a client **102** (e.g., a set top box (STB)) sends cable signals to an RF distribution network **104**. The RF distribution network **104** sends client messages, (e.g., user datagram protocol (UDP) messages) to an S&F proxy **106** at a headend. The S&F proxy **106** sends forwarded messages (e.g., UDP, TCP/IP or HTTP messages) to an IP network **108**. The IP network **108** sends data to an application server **110**. The application server **110** sends data to a fetcher **112** to further process messages. The fetcher **112** uses the data to generate a report **114**. While only one client **102** and application server **110** are shown in FIG. **1**A, this exemplary embodiment may include any number of clients **102**, and/or application servers **110**.

FIG. **1**B is a block schematic diagram showing the client **102** of FIG. **1**A in more detail. The client **102** includes client software **116** and an operating system **118**. The client software **116** includes a client application **120**, a statistics (stats) application program interface (API) **122**, an S&F API **124**, and a UVM native S&F layer **126**.

In this exemplary embodiment, the client application **120** is a Java applet running on the client **102**. The client application **120** uses the services provided by the stats API **122** and the S&F API **124** to send statistics or application-specific data to the application server **110**.

In this exemplary embodiment, the stats API **122** is middleware that resides on the client **102**. It facilitates the gathering of user events from client applications **120** on different clients **102**. For example, when a user starts an application from the main navigation screen (NavShell), the stats API **122** records the time and the application that was started. The stats API **122** then uses the S&F API **124** to send the statistics data to the S&F proxy **106** and ultimately to an application server **110** to collect usage statistics.

In this exemplary embodiment, the stats API **122** provides to the S&F API **124** the IP address and port number of the application server **110** to which the statistics data is sent to the S&F API **124**. In one embodiment, the client software **116** can be configured with default values for the application server **110**.

In one embodiment, each client **102** can be configured to send statistics without identifying the sender. This allows statistics to be collected anonymously, which protects individual subscribers' privacy. In addition, the client **102** can be configured with the amount of memory to use for storing statistics. Configuration can also specify that statistics are sent after a fixed period of time or after a certain amount of data has been collected.

In one embodiment, the S&F API **124** is used by the stats API **122**, but the S&F API **124** can also be used by the client application **120** directly. The S&F API **124** allows the user to specify several attributes that affect how, when and where the data is sent. The user of the S&F API **124** is required to provide the IP address and port number of the application server **110** that receives the data. The user also provides the transmission protocol that the S&F proxy **106** uses to send the data to the application server **110**. Internet protocols are supported, e.g., UDP, transmission control protocol (TCP) and hypertext transfer protocol (HTTP). When the S&F API **124** receives a request to send, the data and all optional and required parameters are passed to the UVM native S&F layer **126**.

In one embodiment, the S&F API **124** allows the user to specify when the initial attempt to send the data occurs, how long this transaction has to complete and how many times to retry sending the data to the S&F proxy **106**.

In one embodiment, when the UVM native S&F layer **126** receives data to send, it formats a message that contains the address of the application server **110** as well as the data. For more information about the structure of the message, see FIGS. **5** and **6**.

In one embodiment, the UVM native S&F layer **126** stores data in non-volatile read-only memory (NVRAM) to ensure that the data will be saved if the power is lost. In one embodiment, the S&F proxy **106** can be configured to not send S&F data during certain times of the day, called blackout periods. These blackout periods are used when the client **102** is being polled to retrieve PPV purchase information. Any additional traffic during these times would affect the reliability of retrieving this information. Alternatively, data can be sent from the client **102** to the S&F proxy **106** and stored in a database.

One exemplary embodiment is a scheduling algorithm that includes transaction lifetime, initial send delay, and the blackout schedule. In order to avoid having all the clients **102** on a network attempt to send at the same time (which would result in severe data loss), a random element is also added to the scheduling algorithm.

In one embodiment, each client **102** is also configured with the amount of memory to use for S&F data, the maximum number of messages to store before sending, and the IP address and port of the S&F proxy **106** to send to.

The operating system **118** provides access for sending and receiving data over the RF Distribution Network **104**.

In one embodiment, the RF Distribution Network **104** is a two-way real-time RF network. Data delivery over this network is unreliable. One exemplary embodiment of the S&F system implements additional levels of reliability. The S&F API **124** allows a caller to determine which level of reliability is required.

In one embodiment, the S&F proxy **106** is a server-side process that facilitates upstream communication for the client **102** via an NC1500, which is an upstream communications router (manufactured by Motorola). It is specifically used for delivering messages sent by clients **102** (via the RF distribution network **104**) to a headend communications network (not shown). When user event data is received by the S&F proxy **106**, the S&F proxy **106** tries to deliver the data to the application server **110** specified in the data, via UDP, TCP or HTTP as specified in the data. The S&F proxy **106** can send data to any of a number of application servers that are reachable via the IP network **108**. The S&F proxy **106** sends data to the application server **110** across the IP network **108**. The S&F proxy **106** and the application server **110** can communicate via any standard Internet Protocols, such as UDP, TCP or HTTP.

In one embodiment, the application server **110** is an entity connected to the IP network **108** that can receive data from the client application **120** via at least one of UDP, TCP and HTTP. The application server **110** is responsible for parsing and processing the data sent by the client application **120**. The S&F proxy **106** can be used to communicate to any application server **110** via the UDP, TCP/IP, or HTTP protocols.

In one embodiment, the S&F API **124** is used by the client application **120** to send raw data to a third party server using UDP, TCP, or HTTP. In one embodiment, the S&F API **124** interfaces with the UVM native S&F layer **126**, which is part of the UVM. In one embodiment, the UVM native S&F layer **126** stores data either in dynamic RAM or in non-volatile memory, until it is received by the S&F proxy **106**. One embodiment is a scheduling algorithm that takes into account blackout periods to determine when to send (i.e., forward) data to the S&F proxy **106**. The scheduling algorithm attempts to minimize data loss in the upstream direction by sharing the upstream communications resource across all clients **102** so as not to overload the upstream channel. One embodiment includes formatting data according to an S&F protocol.

Store And Forward Client-Proxy Protocol

One exemplary embodiment is a store and forward client-proxy protocol that allows for varying levels of reliability, which is achieved through the use of messages passed from the client **102** to the S&F proxy **106** and from the S&F proxy **106** to the client **102**. The client **102** can specify the level of messaging required by setting flags in each request message to the S&F proxy **106**.

In one embodiment, there are three flags that can be set: ACK, RESULT, and DONE. They can be set individually or in combination, but some combinations are invalid. Other flags may be provided as well in alternative embodiments of the invention. The first flag (ACK) tells the S&F proxy **106** whether or not to send the client **102** an acknowledgement when it has received the client's request. The purpose of this flag is to let the client **102** know that it is safe to purge the request data from NVRAM. The second flag (RESULT) tells the S&F proxy **106** whether or not the client **102** wants to be informed of the result of the request. Low-priority requests may not require a result to be sent back to the client. The third flag (DONE) tells the S&F proxy **106** whether or not to hold the result of the request until the client **102** sends the S&F proxy **106** a message acknowledging the receipt of the request result. This is important if the client **102** must know the result of the request. Without this flag, the S&F proxy **106** sends the result only once before purging the request. If that message gets lost, the client **102** is not able to determine the result. With this flag set, the S&F proxy **106** holds onto the request and the result until the client **102** indicates that it has successfully received the result.

Delayed Ack

In this exemplary embodiment, if the ACK flag is set or the RESULT flag is set, then the client **102** implements a delayed ACK scheme. This means that when the S&F proxy **106** receives a request, the S&F proxy **106** does not send the acknowledgement message right away if the ACK flag is set, but tries to complete the transaction first. If the request completes within a few seconds, e.g., ten seconds, the request result is sent instead of the acknowledgement. If the request cannot be completed in that time, the request is written to the database and, then, the acknowledgement is sent to the client **102**. When the request result is determined later, the result is sent if the RESULT flag is set. If the ACK flag is set and the S&F proxy **106** receives a duplicate request, it sends back an ACK immediately. A likely reason for the S&F proxy **106** to receive a duplicate is because the client **102** never received the first ACK, probably due to a lost message.

One exemplary embodiment is a method of operating flags. This method describes the effects of the various combinations of flags.

In this exemplary embodiment, for the combination {ACK-0, RESULT-0, DONE-0}, the client **102** sends the request, but the S&F proxy **106** does not store this in a database. The S&F proxy **106** does not send any message to the client **102** about this request. The S&F proxy **106** purges all information about this request as soon as it completes or times out.

In this exemplary embodiment, for the combination {ACK-1, RESULT-0, DONE-0}, when the S&F proxy **106** receives this message, it sends either an ACK or the result, but not both. See the discussion of DELAYED ACK for more details. The S&F proxy **106** writes this request to the database, if the request cannot be completed immediately. The S&F proxy **106** purges this request as soon as the result is known or the request timeout occurs.

In this exemplary embodiment, for the combination {ACK-0, RESULT-1, DONE-0}, when the S&F proxy **106** receives this message, the S&F proxy **106** attempts to carry out the request. See the discussion of DELAYED ACK for more details. The S&F proxy **106** writes this request to the database, if the request cannot be completed immediately. When the result of the request is known, the S&F proxy **106** sends the result once to the client **102** and immediately purges this request.

In this exemplary embodiment, for the combination {ACK-0, RESULT-0, DONE-1}, which is an invalid combination, if the S&F proxy **106** receives a request with this combination set, it turns off the DONE flag and treats it as if the flags were (0,0,0).

In this exemplary embodiment, for the combination {ACK-1, RESULT-1, DONE-0}, when the S&F proxy **106** receives this message, the S&F proxy **106** attempts to carry out the request. See the discussion of DELAYED ACK for more details. The S&F proxy **106** writes this request to the database, if the request cannot be completed immediately. When the result of the request is known, the S&F proxy **106** sends the result once to the client **102** and immediately purges this request.

In this exemplary embodiment, for the combination {ACK-1, RESULT-0, DONE-1}, which is an invalid combination, if the S&F proxy **106** receives a request with this combination set, it turns off the DONE flag and treats it as if the flags were (1,0,0).

In this exemplary embodiment, for the combination {ACK-0, RESULT-1, DONE-1}, the S&F proxy **106** processes the request immediately, but only writes it to the database, if the request cannot be completed in a certain period of time. No ACK is sent to the client **102**, once the request has been written to the database. Once the result of the request is known, the result is sent back to the client **102**. The S&F proxy **106** does not purge this result until it receives the DONE message from the client **102** or until the request expiry time elapses.

In this exemplary embodiment, for the combination {ACK-1, RESULT-1, DONE-1}, the S&F proxy **106** processes the request immediately, but only writes it to the database, if the request cannot be completed in a certain period of time and an ACK is sent to the client **102**. Once the result of the request is known, the result is sent back to the client **102**. If the result is known before the ACK has been sent, the request is not written to the database and the result is sent to the client **102** instead of the ACK. See the DELAYED ACK discussion for more details. The S&F proxy **106** does not purge this result until it receives the DONE message from the client **102** or until the request expiry time elapses.

Communication Session (Result)

FIG. **2** shows an exemplary embodiment **200** of a method of providing communication sessions between the client **102** and the application server **110** via the S&F proxy **106**. The specifics of these communication sessions are configurable by using the three bit flags entry in a data_send packet. Setting the flags bits to 010 (-, RESULT, -) produces the communication session shown in FIG. **2**. At **202**, the client **102** sends data to the S&F proxy **106**. At **204**, the S&F proxy **106** transfers the data from to the application server **110** from memory. At **206**, the S&F proxy **106** sends a RESULT message to the client **102** to inform it of the status of the data send to the application server **110** so that it may purge the majority of the transaction from memory. In the event that the initial data does not reach the S&F proxy **106** or the S&F proxy **106** goes down between the time the data is received and is sent to the application server **110**, a RESULT message is not sent and the client **102** assumes that the data did not reach the S&F proxy **106**, thereby causing a retransmit from the client.

FIGS. **3**A-**3**C show an exemplary embodiment **300** of a method of providing communication sessions. FIG. **3**A shows a scenario in which the application server **110** cannot be contacted within a prescribed (short) period of time. At **302**, the client **102** sends data to the S&F proxy **106**. At **304**, the S&F proxy **106** then attempts to transfer the data to the application server **110** from memory. After a predetermined number of seconds the S&F proxy **106** assumes the application server **110** is down and, at **306**, writes the transaction to the database **308**. FIG. **3**B shows a scenario in which the transfer is successful. The S&F proxy **106** sends an ACK message, when the S&F proxy **106** has been able to deliver the message to the specified final destination. FIG. **3**C shows a scenario in which the S&F proxy **106** sends the data to the application server **110** at a later date. At **314**, the S&F proxy **106** then sends a RESULT message to the client **102** so that it may purge the majority of the transaction from NVRAM. FIG. **3**D shows a scenario in which the initial data does not reach the S&F proxy **106** or the S&F proxy **106** goes down between the time the data is received and it is sent to the application server **110**, an ACK message is not sent and the client **102** assumes that the data did not reach the S&F proxy **106** causing a retransmit at **316**.

Store And Forward Summary

Table C shows pseudo code for an exemplary embodiment of a method for providing a store and forward architecture in the client **102** that includes Java features, such as asynchronous application layer APIs, e.g., http APIs, and a Java API.

TABLE C

```
public class StoreAndForward
{
  /* * Used to store and forward data to the 3rd party application
  * server identified by <addr:port> using the specified protocol.
  * The same instance can be used to forward multiple sets
  * of data.
  */
  public StoreAndForward (InetAddress addr, int port, int protocol);
  /* Returns the IP address of the 3rd party application server. */
  public InetAddress getInetAddress ( );
  /* Returns the port of the 3rd party application server.*/
  public int getPort ( );
  /* Returns the protocol used to communicate with the app. server */
  public int getProtocol ( );
  /* Returns the current timeout value. */
  public int getTimeout ( );
  /* Returns the current maximum retry count.*/
  public int getMaxRetryCount ( );
  /* isTransaction*/
  public boolean isTransaction ( );
  /* Sets the number of retries for forwarding data.
  * After this limit is reached, no more retries are attempted
  * but the transaction state is stored until the expiry time.
  */
  public void setMaxRetryCount (int count);
  /* Sets the time in seconds after which transaction is abandoned.*/
  public void setTimeout (int timeout);
  /* setTransaction */
  public void setTransaction(boolean isTransaction);
  /* Sets the minimum time (in seconds) after which the first
  * attempt to send data is to be made.
  */
  public void setInitialSendTime (int time);
  /* Add listener to get status on all unfinished transactions */
  public void addNotify (SFNotifyListener nl);
  /* Removes a listener from the list of listeners. */
  public void removeNotify (SFNotifyListener nl);
  /* Submits data to be forwarded to the 3rd party server. */
  /* The transaction-id is returned. */
  public native int forwardData (byte [ ] data, int offset, it len);
  /* Cancels the transaction. */
  public native int cancelTransaction(int transactionID);
}
```

End-To-End Description

One exemplary embodiment is a method for conducting a store and forward transaction that has the following steps.

1. The Java applet creates an instance of a StoreAndForward object.

2. The applet fills in the required data and invokes the send ( ) method.

3. The code in the JVM optionally stores the request in NVRAM to guard against power outages.

4. At some point in the future, the JVM sends a copy of this request to the proxy server, keeping the original in NVRAM (the flags field directs what the S&F proxy **106** does).

5. The S&F proxy **106** receives the message from the client **102** and tries to forward the message before it stores a copy in a database **308** to prevent data loss.

6. If the ACK flag is set, the S&F proxy **106** sends an acknowledgement back to the client **102**, which tells the client **102** that the S&F proxy **106** has successfully received the data, and the S&F proxy **106** attempts to deliver it to the application server **110** specified in the data.

7. The client **102** receives this acknowledgement and can then remove the payload part of this transaction from NVRAM because the S&F proxy **106** has it. It must keep some information about the transaction in NVRAM until it has completed.

8. The S&F proxy **106** attempts to contact the application server **110** at the IP address and port given in the request data via the protocol that the client **102** requested. In one embodiment, UDP, TCP, and HTTP POST requests are supported.

9. The S&F proxy **106** continues to try to send the data until the retry count or time limit to send the data has expired.

10. The S&F proxy **106** creates a transaction status message with the final result. If the original request was stored in the database **308**, the final result is modified in the database record. If the request was not stored, it is not added in this phase. The S&F proxy **106** only sends the final result if the RESULTS flag is set. If the DONE flag is set, the S&F proxy **106** resends the result message until the time limit is reached, or it gets a DONE message.

11. When the client **102** receives the transaction result, it can notify the original applet if it is still running.

12. The client **102** purges the transaction:

a) immediately after sending, if both the ACK and RESULTS are not flags are set (i.e., they are clear);

b) after receiving an ACK, or after the transaction expires, if the RESULTS flag is set.

13. When the S&F proxy **106** receives this DONE status message from the client **102**, the S&F proxy **106** purges all records of this transaction from the database **308**.

Protocol Summary

One exemplary embodiment is an S&F protocol that can be configured on each request to control the level of reliability to make the protocol flexible to handle different client requirements. The S&F protocol does this by setting up to three bit flags in the store and forward protocol header. Each of these flags adds more reliability. The S&F protocol does this by indicating the messages that are exchanged between the client **102** and the S&F proxy **106**.

In this exemplary embodiment, the three possible flags are: SEND_DATA_ACK, SEND_RESULT, and SEND_DONE. The SEND_DATA_ACK flag indicates that the client **102** wants the S&F proxy **106** to send an acknowledgement that the S&F proxy **106** received the client's request successfully. The client **102** keeps retransmitting the request until this acknowledgement is received. The SEND_RESULT flag indicates that the client **102** wants to have the result of the transaction sent back to it when the transaction has either completed successfully, failed, or that the lifetime has expired before the transaction could be completed. This flag can be used with the SEND_DATA_ACK flag or can be used on its own. The SEND_DONE flag indicates that the client **102** sends a TRANSACTION_DONE message to the proxy after it receives the transaction result. This flag is only valid if the SEND_RESULT flag is also on. Setting this flag allows the S&F proxy **106** to know when the client **102** is done with the transaction so that the S&F proxy **106** can purge all data associated with this transaction.

FIG. **4**A shows the messages that are exchanged when no flags are set, in this exemplary embodiment. The client **102** sends the data send message at **400** to the S&F proxy **106**, which sends the data to the application server **110** at **402**.

FIG. **4**B shows the messages that are exchanged when the SEND_DATA_ACK flag is set, in this exemplary embodiment. The client **102** sends the data send message at **400** to the S&F proxy **106**. The S&F proxy **106** sends a transaction status message with data acknowledgement to the client **102** at **404**.

FIG. **4**C shows the messages that are exchanged when the SEND_RESULT flag is set, in this exemplary embodiment. The client **102** sends the data send message at **400** to the S&F proxy **106**. The S&F proxy **106** sends the data to the application serer **110** at **402**. The S&F proxy **106** sends a transaction status message with data acknowledgement to the client **102** at **404**. The application server **110** sends a response to the S&F proxy **106**, if HTTP at **406**.

FIGS. **4**D and **4**E show exemplary embodiments **400**, **402** for a method that the messages that are exchanged when the DATA_ACK, SEND_RESULT and SEND_DONE flags are set, in this exemplary embodiment. This sequence provides the most reliability, but as a consequence requires the most amount of messages to be exchanged. In FIG. **4**D, the data is sent successfully, but in FIG. **4**E, the send is unsuccessful and times out after retrying.

In FIG. **4**D, at **404**, a data send message is sent from the client **102** to the S&F proxy **106**. At **406**, the data is sent from the S&F proxy **106** to the application server **110**. At **408**, a transmit status message with data ACK is sent from the S&F proxy **106** to the client **102**. At **410**, the result is sent from the S&F proxy **106** to the client **102** with the status of the client data send request. At **412**, a transmit status message with DONE is sent from the client **102** to the S&F proxy **106**.

In FIG. **4**E, at **412**, a data send message is sent from the client **102** to the S&F proxy **106**. At **414**, the data is unsuccessfully sent from the S&F proxy **106** to the application server **110**. At **416**, the S&F proxy **106** retries sending the data and, then, times out at **418**. At **420**, the transmit status message with result is sent from the S&F proxy **106** to the client **102**, because the request did not complete in the allowed time interval. At **422**, the client **102** send the transmit status message with done to the S&F proxy **106**.

Transport Protocol Details

Common Store And Forward Header

FIG. **5** shows one exemplary embodiment **500** of a header that is sent at the start of every message both from the client **102** to the S&F proxy **106** and from the S&F proxy **106** down to the client **102**. In this exemplary embodiment **500**, the header includes the following fields: client media access control (MAC) address **502**, flags (byte) **504**, and transaction ID **506**. The client MAC **502** address field is the five-byte identifier for the set top box. The flags field **504** is a one-byte field that consists of three bits for the message type **508**, three bits for flags **510**, and two bits for the transport protocol **512**. The message type field **508** can be one of TRANS_DATA, TRANS_STATUS, or TRANS_CANCEL. The flags **510** can be any OR-ed combination of TRANS_SEND_DATA_ACK, TRANS_SEND_RESULT, and TRANS_SEND_DONE. The protocol field **512** can be one of PROTO_UDP, PROTO_TCP, or PROTO_HTTP. The transaction ID field **506** is a two-byte field that uniquely identifies the transaction from this client.

Data Request Message

FIG. **6** shows one exemplary embodiment **600** of a data request message, which is included after the common data header **500** of FIG. **5**. In this exemplary embodiment **600**, the data request message includes the following fields: destination IP address **602**, destination port **604**, and send expiry **604**. The send expiry field **604** is the number of minutes, relative to the time the S&F proxy **106** receives the data to send to the application server **110**. If this time elapses without a completed send to the application server **110**, either a success or the application server **110** returned a failure (only for HTTP in one embodiment), then the transaction is considered to have timed out. No further attempts are made to send the data to the application server **110**. The S&F proxy **106** then

changes transaction expiry to a value within the range of send expiry **604** seconds to a fixed period of time, such as 60 seconds in one embodiment, to send this TIMEDOUT result back to the client **102**, if RESULT was requested by the client **102**. The destination IP address **602** is the four-byte IPv4 address of the application server **110** to which to send the data. In another embodiment, this could be a host name of the application server, rather than an IP address. The destination port **604** is the two-byte port number on the application server **110** to which to send the data. The protocol to use to send the data is specified in the common header **500**.

Transaction Status Message

FIG. **7** shows one exemplary embodiment **700** of a transaction status message. This exemplary embodiment **700** of the transaction status message includes the following fields: result **702**, state **704**, and padding **706**. This message is sent by the S&F proxy **106** to the client **102** for the purposes of acknowledgement and for sending the result of the transaction. It is sent from the client **102** to the S&F proxy **106** to indicate that the client **102** has finished with the transaction. This is appended after the common data header **500**. The result field **702** is the last known result of this request, which is one of the following results: INVALID, INPROGRESS, SUCCEEDED, FAILED, TIMEDOUT, CANCELLED, or TOO_MANY_TRIES. The state field **704** is the current state of the transaction, if the result **702** was INPROGRESS. Otherwise, the state field **704** may be one of the following states: DATA_RCVD, DATA_ACKED, SENDING_DATA, and SENT_DATA.

FIG. **8** shows an exemplary embodiment **800** of a method of implementing a no delayed acknowledgement (ACK) scheme. (Compare the delayed ACK scheme of FIG. **9**.) In this exemplary embodiment **800**, messages are exchanged between the client **102** and the S&F proxy **106**. At **802**, the client **102** creates and prepares an S&F object. At **804**, the client **102** calls the S&F API **124**. At **806**, the client **102** stores a message in NVRAM. At **808**, the client **102** sends a copy of the message or messages to the S&F proxy **106**.

At **810**, the S&F proxy **106** determines whether the ACK flag is set in the message. If the ACK flag is set, at **812** the S&F proxy **106** sends an ACK message to the client **102**. If the ACK flag is not set, control flows to **820**.

At **814**, the client **102** receives the ACK message, terminates retries at **816**, and purges stored messages at **818**.

At **820**, after determining that the ACK flag is not set, the S&F proxy **106** sends the message to the destination (i.e., the application server **110**). At **822**, the S&F proxy **106** determines whether the message was sent successfully. If the message was not sent successfully at **822**, the S&F proxy **106** copies the message to the database **308** at **824** and retries sending the message to the destination at **826**. If it is determined at **828** that the retry was not successful, the S&F proxy **106** retries sending the message, until the retry limits are exceeded at **830**. If the retry was successful, the message is purged from the database **308** at **832**. If the message was sent successfully at **822**, or if a retry was successful at **828**, the S&F proxy **106** determines whether the RESULT flag is set at **834**. If the RESULT flag is set, the S&F proxy **106** sends the result to the client **102** at **836**.

At **838**, the client **102** receives the result from the S&F proxy **106** and, at **840**, returns the result to the client application **120** through the S&F object.

At **842**, after sending the result to the client at **836**, the S&F proxy **106** determines whether the DONE flag is set. If the DONE flag is set, the S&F proxy **106** waits for a done message or a timeout at **844**.

At **846**, after receiving the result at **838**, the client **102** determines whether the DONE flag is set. If the DONE flag is set, the client **102** sends a done message to the S&F proxy **106** at **848**.

At **850**, after determining that the DONE flag was not set at **842** or the RESULT flag was not set at **834**, the S&F proxy purges the transaction.

FIG. **9** shows an exemplary embodiment **900** of a method of implementing a delayed acknowledgement (ACK) scheme. In this exemplary embodiment **800**, some of the steps are the same as the no-delay ACK scheme of FIG. **8**, but some steps are new, missing, or re-ordered in the delayed ACK scheme of FIG. **9**. The steps performed by the client **102** are the same as in the no-delay ACK scheme of FIG. **8**. However, in FIG. **9**, the S&F proxy **106** does not determine whether the ACK flag is set or send the ACK message if it is. Instead, in FIG. **9**, the S&F proxy simply attempts to send the message to the destination at **820**, without checking the ACK flag. If the message is sent successfully at **822**, the result is sent to the client **102**, without checking the RESULT flag at **834**. If the message is not sent successfully at **822**, it is copied to the database **308** at **824** and the ACK message is sent at **812**. This is different from the no delayed ACK scheme of FIG. **8**, where the ACK message is sent only if the ACK flag is set.

S&F Proxy Details

The S&F proxy **106** receives data sent from the client **102** and passes it on to the host specified in the data. The client **102** also specifies the transport mechanism to be used, e.g., TCP, UDP or HTTP. If the S&F proxy **106** cannot send the data to the final destination (i.e., the application server **110**) within a given period of time (e.g., ten seconds), then the S&F proxy **106** saves the client data to a database **308**, and sends an acknowledgement to the client **102** (in some embodiments) to tell the client **102** that the S&F proxy **106** has successfully received the request and is responsible for ensuring its delivery. The S&F server **106** continues to try to deliver the data to the destination application server **110** until a timeout for that request has expired, the client **102** cancels the request, or it has been successfully delivered.

Running The S&F Proxy

One exemplary embodiment of the S&F proxy **106** has the following command-line options: p, c, d, u, and w. The command-line option p specifies the UDP port number that the S&F proxy 1-6 listens on to receive requests from clients **102**. In one embodiment, if this option is not specified, a default of **1022** is used and the proxy is run with a EUID of 0. The command-line option c specifies the path to a configuration file. The default is "./.proxyrc". This configuration file specifies the debugging level to use, as well as the name of the debugging output file to use. The configuration file can be changed at run-time and is reread by sending the S&F proxy **106** process a SIGHUP. The command-line option d specifies the data source name (DSN) to use. This name must refer to an entry in the odbc.ini configuration file that the S&F proxy **106** reads. It uses this to determine on which host the database **308** resides and which open database connectivity (ODBC) driver to use to communicate with it. The command-line option u specifies the username the S&F proxy **106** uses when logging into the database. The command-line option w specifies the password, if any, to use with the given username to log in to the database **308**.

In this exemplary embodiment, the data the S&F proxy **106** sends to the client **102** (e.g., set top box (STB)) is sent as a UDP packet. This UDP packet is received by the network controller (NC) and sent downstream to the client **102** via the out of band channel (OOB). There is a route or routes for the client IP addresses to the NC, which is the gateway to the

operation, administration, management and provisioning (OAM&P) network. OAM&P is the network between the S&F proxy **106** and the network controller in the RF distribution network **104**.

APPLICATION SERVER EXAMPLE

In one embodiment, the application server **110** is a statistics server. When contacted by the S&F proxy **106**, the application server **110** breaks down the received information into single events and saves them, for example, in a flat text file. In one embodiment, the fetcher **112** is daemon that runs in a central point of the headend (not shown). The fetcher **112** collects data from one or more application servers **110** and saves the collected data to, for example, a central log file. In one embodiment, the data bridge (not shown) is a software utility that can be used to import a flat text file into an Oracle database. The fetcher **112** output files are used by the data bridge to store data in the database. In one embodiment, a third party tool, such as BrioQuery, can be used to create graphical representations of the collected data.

Statistics Gathering & Transmission

One exemplary embodiment is a method of statistics gathering and transmission. As events are triggered by user interaction with the client **102**, statistics are gathered in a buffer. At the client level, the fields are shown below in Table A.

TABLE A

User	Event	Date	Data
APDN	0010304ead	996521265	Menu:0;3
APDN	0010304ead	996521427	/interactive/Golf.jar;328
APDN	0010304ead	996521530	Menu:1;8
APDN	0010304ead	996521710	/interactive/Spades.jar;175
UWWW	0010304ead	998936906	.backslash.http://www.metatv.net/compact__att/cnnsi/story.jsp?want=2;13

In this exemplary embodiment, the typical size of the MENU event is approximately 34 bytes. Because of the variable "data" field, a micro browser application (μ Browser) statistic can be as large as a visited URL. The events are approximately 90 bytes in this embodiment. When the client buffer is filled and additional statistics are generated, before the current ones are removed, the oldest statistics are removed to create space. Currently, there is no operator indication when this occurs. When an upstream statistic transmission is triggered, a single, or group of statistics is sent to the S&F proxy **106** in a single upstream packet. The packet payload is limited to a maximum of approximately 1000 bytes in this embodiment. In this exemplary embodiment, a packet is to be sent up to a maximum of ten times between the first transmission and the maximum expiry time, currently twenty four hours. Once an ACK is received from the S&F proxy **106**, the client **102** assumes the statistic was successfully sent and removes it from memory. If, after ten attempts to send the statistic, an ACK is not received, the statistic is cleared from memory.

Log File Format—Server

In one embodiment, the log file format includes a single user event per line, with the following four tab delimited fields: date, event, user, and data. In addition, the following log file parameters may be included: server, date, and time. The date and time are measured, for example, in seconds since Jan. 1, 1970, (the UNIX Epoch) that the event reached the server in Greenwich Mean Time (GMT). This allows for the use of standard UNIX function calls for the decoding of time. The event is a four character user event code that describes a single user action. The user is an identification of the user that caused the event. In one embodiment, identification is made only at the set-top level, not at the user level. The data is any optional data associated with an event.

Current User Event Codes

Table B below outlines the event codes used in one embodiment. Each event is accompanied by a time stamp and the set-top/username. Some events also include additional data in the optional data field. For example, the TVCH event contains the numeric value of the channel that was tuned.

TABLE B

Event Codes

Event Code	Description	When Event is Triggered	Data Field
UNON	Unit On	Set-top is powered on	n/a
UNOF	Unit Off	Set-top is powered off	n/a
ULIN	User Login	User logs in	n/a
ULOF	User Logoff	User logs off	n/a
TVCH	New TV	User tunes to a new channel	numeric value of channel, example: 2
TVLC	Left TV Channel	User leaves a tuned channel	numeric value of the channel that was left and the channel that is currently being viewed separated by a semicolon example: 2;7
TVMT	TV Mute On	TV is muted	n/a
TVUM	TV Mute Off	Sound is turned back on	n/a
WWPG	New Web Page	URL is visited	the URL, example: http://www.cnn.com

Additional User Event Codes

Table C below outlines the additional codes that are added to the existing set to facilitate user interaction with the Guide, μ Browser, TV Ticker, and Games, in one embodiment. Each event is accompanied by a time stamp and the set-top name. Some events also include additional data in the optional data field. For example, the APDN contains an application identifier.

TABLE C

Additional User Event Codes

Event Code	Description	When Event is Triggered	Data Field
GDON	Guide On	User enters the Guide	The menu in Guide that is selected. At this time, only the main menu is identified in

TABLE C-continued

Additional User Event Codes

Event Code	Description	When Event is Triggered	Data Field
			statistics gathering; example: main.
GDDN	Guide Duration	User exists a menu from the Guide	The menu identifier and the duration using that menu in seconds; example: main; 16.
APDN	Application Duration	User exits the application	The application ID and the duration in the application in seconds example: μ Browser;23
UWWW	Micro Browser URL	User leaves a URL	The URL visited and the duration spent at the URL in seconds example: www.liberate.com;300
TKCV	TVTicker Category View	User cursors to a category to view available stories	The category identifier that the user is viewing and duration example: business;5
TKST	TVTicker Story Selection	User selects a story	The story identifier that the user selected and the duration spent reading story example: Sports;tc.jsp?11751;47

Example Event Entries Of Data

Some examples of typical user events are as follows, each has the following form: {timestamp, event code, client address, timestamp, application-specific data field}: (1) 996588616 APDN 0010304ead 996521265 Menu:0;3; (2) 996588616 APDN 0010304ead 996521427/interactive/Golf-jar;328; (3) 996588616 APDN 0010304ead 996521530 Menu:1;8; and (4) 996588616 APDN 0010304ead 996521710/interactive/Spadesjar;175. All events arrived at the Server on Tue Jul 31 10:10:16 2001. These events can be interpreted as: (1) user displayed the menu for 3 seconds and then exited on Jul 30 15:27:45 2001; (2) user played Golf game for 328 seconds and exited on Jul 30 15:30:27 2001; (3) user displayed the menu #1 for 8 seconds and then exited on Jul 30 15:32:10 2001; and (4) user played Spades game for 175 seconds and exited on Jul 30 15:35:10 2001.

Client Configuration

One exemplary embodiment is a method for client-side provisioning for statistics gathering, which is facilitated through a configuration file. For example, a config.props file is uploaded using a carousel user interface utility to a /etc directory of an out of band file carousel, which is being transmitted to the clients **102**. The carousel user interface is a way to put a configuration file or other information onto a carousel server, which is at the headend and sends carouselled data files continuously to clients, e.g., set top boxes. The configuration file may include information such as configuration for the S&F system, the number of messages to store, how frequently to send them, and the like.

One exemplary embodiment is a method for configuring the following variables: SFProxyAddress, SFProxyPort, SFSchedDelay, SFMaxConcMsgs, SFMaxMemSize, SFBlackoutSchedule, StatsAnonymous, StatsMaxBufferSize, StatsBufferSize, StatsFlushTime, and Address, Port.

In this exemplary embodiment, SFProxyAddress defines the IP address of the S&F proxy **106** and must be in the dotted-decimal format and cannot be a hostname. Also, the IP address must be one that is connected to the IP network **108**. There is no default value. Therefore, if it is not provided, messages are not sent from the client **102** to the S&F proxy **106**. For example, this exemplary embodiment may set SFProxyAddress=192.168.14.215.

In this exemplary embodiment, SFProxyPort defines the port on which the S&F proxy **106** server is providing the S&F service. For example, this exemplary embodiment may set a default value of 1022 or SFProxyPort=10010.

In this exemplary embodiment, SFSchedDelay is used in calculating the time at which an upstream message is sent. An upstream message is sent at a random time between blackout periods. The SFSchedDelay determines the window of time within which a random value is chosen. The unit of measure for SFSchedDelay is seconds.

In this exemplary embodiment, SFMaxConcMsgs defines the maximum number of S&F messages held in memory. A value of zero is valid, but pending messages are not purged. An exemplary default value is 100.

In this exemplary embodiment, a recommended setting for SFMaxMemSize is 8192, which is the maximum amount of memory that the S&F system can use when storing messages. The unit of measure is bytes. An exemplary default value is 8192.

In this exemplary embodiment, a recommended setting for SFBlackoutScheduleis 6 AM-12 PM Daily. This defines the a times when the client **102** is not allowed to send upstream messages to the S&F proxy **106** and includes a list of start-time end-time combinations separated by commas, e.g., SFBlackoutSchedule=M 12:30 T 13:30, W 14:00 W 18:00. The schedule spans for a week. The start-times for a blackout period must be smaller than the end-time. The days of the week are abbreviated by one letter and are ordered as follows: S (Sunday)<M (Monday)<T (Tuesday)<W (Wednesday)<H (Thursday)<F (Friday)<A (Saturday). The time is specified on a 24 hour clock starting at time 0 and ending and hour 23. The separators are space (' ') and comma (','). Currently, the accepted blackout period for field deployments is 6 PM to 12 AM daily:

SFBlackoutSchedule=M 18:00 T 0:00, T 18:00 W 0:00, W 18:OOH 0:00, H 18:00 F 0.backslash.:00, F 18:00 A 0:00, A 18:00 S 0:00, S 18:00 M 0:00.

In this exemplary embodiment, StatsAnonymous specifies whether or not the statistics gathered are anonymous. In other

words, if it is anonymous, then the user names are marked with an 'X' when they are recorded. A value of "false" results in user names being recorded. The default is to be anonymous. An exemplary value is StatsAnonymous=false.

In this exemplary embodiment, the recommended setting for StatsMaxBufferSize is 8192. This specifies the amount of S&F memory that can be used for statistics. Once the limit is reached and a new statistic is recorded, pending statistics are cancelled, starting with the oldest. The unit of measure is bytes and default value is 8192.

In this exemplary embodiment, the recommended setting for StatsBufferSize is 880. This specifies the amount of statistics data that is buffered before it is sent to the application server **110**. The values supported are in the range 15-880. The unit of measure is bytes.

In this exemplary embodiment, the recommended setting for StatsFlushTime is 1800. This specifies the amount of time statistics are buffered before they are flushed. The value must be greater than zero and the unit of measure is seconds.

In this exemplary embodiment, the Address variable specifies the address of the application server **110** and must be in the dotted-decimal format. It cannot be a hostname. There is no default value. Therefore, if it is not provided, statistics are not sent from the client to the proxy. An exemplary value is Address=192.168.14.206.

In this exemplary embodiment, Port defines the port on which the application server **110** servicing requests and the default value is 89.

In this exemplary embodiment, to disable the gathering and transmission of stats, set the following variables to 0: SFMaxMemSize and StatsMaxBufferSize.

Statistics Gathering

One exemplary embodiment is a method of formatting, collecting, and providing a presentation of statistics that are gathered from user interaction. Some areas in which statistics are gathered include: NavShell use, web browsing, TV viewing, TVTicker, μ Browser, ETV, and Games. In this exemplary embodiment, the default configuration sets the user identification field to anonymous. There is, however, a configuration option that allows the client **102** (e.g., the set-top box) to include the actual user name. The duration and exit time of all applications, including games and enhanced TV (ETV) are collected. The duration and exit time of menus displayed by the NavShell menu display. The duration and exit time of ETV icon display events are collected. The manual selection of a category view that lasts for at least five seconds for TVTicker is collected. The category selected to view a complete story and the length of time that a story is viewed is collected. For μ Browser, the URL and the duration at the URL is collected.

One exemplary embodiment is an S&F system **100** that supports multiple applications within an extensible network **108** to direct information of various formats to any of multiple destinations, including a client application **120** resident at a client **102** location for storing non-priority data and for sending said data to any one or more application servers **110** on the network **108** at some future time and a server-side proxy server process **106**. In one embodiment of the S&F system **100**, the client application **120** allows any of sending usage statistics to a database **308** on the network **108** and enabling T-commerce purchases to be made by a user, where purchase and other relevant information is sent to a destination server **110**.

Another exemplary embodiment is an S&F system **100** that includes a client module **116**, an S&F proxy **106**, and a server **110**. The client module **116** resides on a digital terminal **102** for facilitating the gathering of user events from different applications, and for sending the user events to a store and forward proxy **106** in a message batch. The S&F proxy **106** includes a server-side construct for facilitating upstream communication for the digital terminal **102**. The S&F proxy **106** converts user event data received by the S&F proxy **106** to a standardized format and sends the converted data to a server **110**. The server **110** facilitates communications from both the client **102** and a fetcher **112**. The server **110** breaks down received information into single events and saves them in a file **114** when contacted by the S&F proxy **106**. The fetcher **112** collects data from at least one server **110** and saves the data to a central log file **114**.

In one embodiment, the system also includes a data bridge for importing the fetcher central log file **114** into a database **308**.

In one embodiment, the client module **116** includes a configuration file.

In one embodiment, the configuration file includes any of the following variables: SFProxyAddress, SFProxyPort, SFschedDelay, SFMaxConcMsgs, SFMaxMemSize, SFBlackoutSchedule, StatsAnonymous, StatsMaxBufferSize, StatsBufferSize, StatsFlushTime, address, and port. SFProxyAddress defines an IP address of the S&F proxy **106**. SFProxyPort defines a port on which the S&F proxy **106** provides store and forward service. SFschedDelay is used in calculating a time at which an up stream message is sent. An upstream message is sent at a random time between blackout periods and SFSchedDelay determines a window of time within which a random value is chosen. SFMaxConcMsgs defines a maximum number of store and forward messages held in memory. SFMaxMemSize is a maximum amount of memory that the S&F system **100** can use when storing messages. SFBlackoutSchedule defines a time when the client module **116** is not allowed to send upstream messages to the S&F proxy **106** and includes a list of start-time and end-time combinations. StatsAnonymous specifies whether or not statistics gathered are anonymous. StatsMaxBufferSize specifies an amount of store and forward memory that can be used for statistics. Once a limit is reached and a new statistic is recorded, pending statistics are cancelled, starting with an oldest. StatsBufferSize specifies an amount of statistics data that is buffered before it is sent to a statistics server. StatsFlushTime specifies an amount of time statistics are buffered before they are flushed. Address specifies an address of a statistics server. Port defines a port on which a server is servicing requests.

In one embodiment of the system **100**, the S&F proxy **106** facilitates communication between the client module **116** and the application server **110** as follows. The client module **116** sends data to the S&F proxy **106**. The S&F proxy **106** then transfers the data from to the application server **110** from memory. The S&F proxy **106** then sends a result message to the client module **116** to inform it that the data was sent to the application server **110** so that the client module **116** may purge at least a majority of a transaction from client memory. In the event that initial data does not reach the S&&F proxy **106** or the S&F proxy **106** goes down between a time the data are received and the data are sent to the application server **110**, a result message is not sent and the client module **116** assumes that the data did not reach the S&F proxy **106**, thereby causing a retransmit of the data.

In one embodiment of the S&F system **100**, the S&F proxy **106** facilitates communication between the client module **116** and the application server **110** when the application server **110** cannot be contacted within a prescribed period of time as follows. The client module **116** sends data to the S&F proxy

106. The S&F proxy 106 then attempts to transfer the data to the application server 110 from memory. After a predetermined interval, the S&F proxy 106 assumes the application server 110 is down and writes a transaction to a database 308. The S&F proxy 106 then sends a result message to the client module 116 to inform it that data was written to the database 308, so that the client module 116 knows a packet was received and does not require a retransmit. The S&F proxy 106 sends the data to the application server 110 at a later date and the S&F proxy 106 then sends a result message to the client module 116 so that the client module 116 may purge at least a majority of a transaction from client memory.

In one embodiment of the S&F system 100, the client module 116 further includes a buffer for gathering statistics as events are triggered by user interaction. In one embodiment, the client module buffer is filled and additional statistics are generated. Before current statistics are removed, the oldest statistics are removed to create space. In one embodiment, when an upstream statistic transmission is triggered, a single, or group of statistics is sent to the S&F proxy 106 in a single upstream packet. In one embodiment, once an acknowledgement is received from the S&F proxy 106, the client module 116 assumes a statistic was successfully sent and removes it from memory.

Another embodiment is a method for performing a store and forward transaction. At a client 102, an applet is used to create an instance of a StoreAndForward object. The required data is filled in and a send method is invoked. A request is stored in non-volatile memory to guard against power outages. At some point in time, a copy of the request is sent to an S&F proxy 106, while keeping an original in non-volatile memory. At the S&F proxy 106, the message is received from the client 102 and a copy is stored in a database 308 to prevent data loss. An acknowledgement is sent back to the client 102 telling the client 102 that it has successfully received the data. The S&F proxy 106 attempts to deliver the data to an application server 110 that is specified in the data. The client receives the acknowledgement and then removes a payload part of a transaction from non-volatile memory, because the S&F proxy 106 has the payload. The client 102 keeps some information about the transaction in non-volatile memory, until the transaction is completed. The S&F proxy 106 attempts to contact the application server 110 at an address and port given in the request data via a protocol that the client 102 requested. The S&F proxy 106 continues to try to send the data up to a number of request attempts given in the request or until a time limit to send the data is expired. The S&F proxy 106 creates a transaction status message with the final result and stores this message in the database 308. The S&F proxy 106 sends the message back to the client 102 and waits for a done message from the client 102. When the client 102 receives the transaction result, the client 102 can notify an original applet, if the applet is still running. The client 102 sends a transaction status message to the S&F proxy 106 indicating that said transaction is done. When the S&F proxy 106 receives the done status message from the client 102, the S&F proxy 106 purges all records of the transaction from the database 308.

Another embodiment is an S&F system 100 that includes a client application 120, a server-side proxy server process, a store and forward protocol header, and means for setting at least one flag. The client application 120 is resident at a client 102 location for storing data and for sending the data to any one or more servers 110 on a network 108 at some future time. A store and forward header is sent at the start of every message both from the client 102 to the S&F proxy 106 and from the S&F proxy 106 down to the client 102.

In one embodiment, the at least one flag is any of the following flags: SEND_DATA_ACK, SEND_RESULT, and SEND_DONE. The SEND_DATA_ACK flag indicates that the client 102 wants the S&F proxy 106 to send an acknowledgement that the S&F proxy 106 received the client's 102 request successfully and the client 102 keeps retransmitting the request, until an acknowledgement is received. The SEND_RESULT flag indicates that the client 102 wants to have a result of a transaction sent back to it when the transaction has either completed successfully, failed, or a lifetime has expired before the transaction could be completed. The SEND_DONE flag indicates that the client 102 sends a TRANSACTION_DONE message to the S&F proxy 106 after it receives a transaction result. Setting this flag allows the S&F proxy 106 to know when the client 102 is done with the transaction so that it can purge all data associated with the transaction.

In one embodiment, the store and forward header includes any of the following fields: a client MAC address and one or more flags. The client MAC address is an identifier for a client appliance. The Flags indicate any of the following: a message type, a flag, and a transport protocol, a transaction ID, and a data request message. The transaction ID uniquely identifies a transaction from a particular client.

In one embodiment, the data request message is included after a common data header and includes any of the following: a transaction expiry, a send expiry, a destination address, a destination port number, a number of retransmits, and one or more optional flags. The transaction expiry set a time by which a transaction must complete. The send expiry sets a time the S&F proxy 106 has to send data to an application server 110. The destination address is the address of an application server to which to send the data. The destination port number is the port on an application server to which to send the data. The number of retransmits sets a maximum number of times the S&F proxy 106 attempts to send the data to an application server. The optional flags are set by the client 102 and can specify additional options for a request.

In one embodiment, the S&F system 100 also includes a transaction status message appended after a common data header. The transaction status message is sent by the S&F proxy 106 to the client 102 as an acknowledgement and to send a result of a transaction. The transaction status message is sent from the client 102 to the S&F proxy 106 to indicate that the client has finished with a transaction. The transaction status message includes any of the following: a result and a state. The result is a last known result of a request and can include any of the following results: INVALID, INPROGRESS, SUCCEEDED, FAILED, TIMEDOUT, CANCELLED, or TOO_MANY_TRIES. If a result is INPROGRESS, then the state is a current state of a transaction, and can include any of the following: DATA_RCVD, DATA_ACKED, SENDING_DATA, and SENT_DATA.

Another embodiment is a store and forward system 100 that allows for varying levels of reliability. This system includes a client 102 an S&F proxy 106 and a plurality of messages passed from the client 102 to the S&F proxy 106 and from the S&F proxy 106 to the client 102. The client 102 can specify a level of messaging required by setting flags in each request message to the S&F proxy 106. The flags can be set individually or in combination.

In one embodiment, a flag tells the S&F proxy 106 whether or not to send the client 102 an acknowledgement, when the S&F proxy 106 has received a client's 102 request. The flag lets the client 102 know that it is safe to purge a request data from memory.

In one embodiment, a flag tells the S&F proxy **106** whether or not the client **102** wants to be informed of a result of a request. Low-priority requests may not require a result to be sent back to the client **102**.

In one embodiment, a flag tells the S&F proxy **106** whether or not to hold a result of a request, until the client **102** sends the S&F proxy **106** a message acknowledging receipt of the request result. The S&F proxy **106** holds onto a request and a result, until the client **102** indicates that it has successfully received the result.

Although the invention is described herein with reference to exemplary embodiments, one skilled in the art will readily appreciate that other applications may be substituted for those set forth herein without departing from the spirit and scope of the present invention. Accordingly, the invention should only be limited by the claims included below.

The invention claimed is:

1. A method for operating a store and forward (S&F) system for transmitting messages from a client to a recipient in a network, comprising:

receiving, at an S&F proxy intermediate the client and the recipient, a data message from the client, the data message having a header;

determining, at the S&F proxy, whether an acknowledgement (ACK) flag is set in the header of the data message, the ACK flag signaling the S&F proxy to send an ACK message acknowledging the S&F proxy's receipt of the data message from the client and informing the client that the data message may be purged from memory;

if the ACK flag is set in the header:

waiting, by the S&F proxy until completion or timeout of an S&F transaction before sending the ACK message,

upon completion of the S&F transaction within a predetermined time, sending a result (RES) message from the S&F proxy to the client instead of the ACK message, the RES message disclosing a result of the S&F transaction;

upon not completing the S&F transaction within the predetermined time, sending the ACK message from the S&F proxy to the client and storing the data message in a memory at the S&F proxy; and

if a RES flag is set in the header of the data message;

upon completion of the S&F transaction or timeout sending the RES message from the S&F proxy to the client.

2. The method of claim **1**, further comprising;

upon receiving a duplicate data message from the client and if the ACK flag is set, sending the ACK message from the S&F proxy to the client.

3. The method of claim **1**, further comprising:

the client creating an S&F object for an S&F application programming interface (API); and

sending the data message via the S&F API from the client to the S&F proxy.

4. The method of claim **3**, further comprising:

storing the data message in memory at the S&F proxy.

5. The method of claim **1**, wherein completion of the S&F transaction includes sending the data message to a server and further comprising

upon unsuccessfully sending the data message, attempting to send the data message to the server again by the S&F proxy and storing the data message to a database.

6. The method of claim **5**, further comprising:

upon successfully sending the data message, purging the data message from the database by the S&F proxy.

7. The method of claim **1**, further comprising:

waiting, by the S&F proxy, until a done message is received from the client to purge the S&F transaction, if a DONE flag in the header is set.

8. The method of claim **7**, further comprising:

sending a done message by the client to the S&F proxy, responsive to the client receiving the result message, if the DONE flag in the header is set.

9. A store and forward (S&F) system, comprising:

a client device having a memory and configured to send a data message via a network, the data message including a header, the header including an acknowledgement (ACK) flag and a result (RES) flag; and

an S&F proxy device, intermediate the client device and a recipient, the S&F proxy device having a memory and configured

(1) to receive the data message from the client device,

(2) to wait before sending an ACK message to the client device, until completion of the S&F transaction or timeout, if an ACK flag is set, the ACK message acknowledging the S&F proxy's receipt of the data message from the client device and informing the client device that the data message may be purged from memory,

(3) to send a RES message to the client device instead of the ACK message, upon completion of the S&F transaction within a predetermined time, if the ACK flag is set, the RES message disclosing a result of the S&F transaction,

(4) to send the ACK message to the client device and to store the data message, upon not completing the S&F transaction within a predetermined time, if the ACK flag is set, and

(5) to send the RES message to the client device, upon completion of the S&F transaction or timeout, if the RES flag is set.

10. The S&F system of claim **9**, further comprising:

an Internet Protocol (IP) network to receive IP messages from the S&F proxy; and

an application server to receive data from the S&F proxy via the IP network.

11. The S&F system of claim **9**, wherein the client device further comprises:

a client software component; and an operating system.

12. The S&F system of claim **11**, wherein the client software component further comprises:

a client application;

a statistics application programming interface (API) to provide services to the client application; and

an S&F API to send messages to an application server.

13. The system of claim **12**, wherein the client device creates an S&F object for the S&F API and sends the data message to the S&F proxy by calling the S&F API.

14. The system of claim **9**, wherein, upon receiving a duplicate data message from the client and if the ACK flag is set, the S&F proxy sends the ACK message to the client device.

15. The system of claim **9**, wherein completion of the S&F transaction includes sending the data message to a server and, wherein, upon unsuccessfully sending the data message, the S&F proxy attempts to send the data message to the server again and stores the data message to a database.

16. The system of claim **15**, wherein upon successfully sending the data message, the S&F proxy purges the data message from the database.

17. The system of claim **9**, wherein the S&F proxy waits to purge the S&F transaction until a done message is received from the client device, if a DONE flag in the header is set.

18. The system of claim **17**, wherein the client device sends a done message to the S&F proxy responsive to the client device receiving the result message, if the DONE flag in the header is set.

19. A computer readable medium storing instructions for performing a method for operating a store and forward system for messages from a client to a recipient in a network, the method comprising:

receiving, at an S&F proxy intermediate the client and the recipient, a data message from the client, the data message having a header;

determining, at the S&F proxy, whether an acknowledgement (ACK) flag is set in the header of the data message, the ACK flag signaling the S&F proxy to send an ACK message acknowledging the S&F proxy's receipt of the data message from the client and informing the client that the data message may be purged from memory;

if the ACK flag is set in the header:

waiting, by the S&F proxy, until completion or timeout of an S&F transaction before sending the ACK message,

upon completion of the S&F transaction within a predetermined time sending a result (RES) message from the S&F proxy to the client instead of the ACK message, the RES message disclosing a result of the S&F transaction;

upon not completing the S&F transaction within the predetermined time, sending the ACK message from the S&F proxy to the client and storing the data message; and

if a RES flag is set in the header of the data message:

upon completion of the S&F transaction or timeout, sending the result message from the S&F proxy to the client.

20. The computer readable medium of claim **19**, further comprising:

upon receiving a duplicate data message from the client and if the ACK flag is set, sending the ACK message from the S&F proxy to the client.

21. A store and forward (S&F) proxy comprising a memory and configured to execute a process including:

receiving a data message over a network from a client device, the data message including an acknowledgement (ACK) flag and a results (RES) flag;

transmitting a message to a recipient requesting performance of a transaction based on the data message;

upon determining that the data message received from the client device includes an acknowledgement (ACK) flag that is set, waiting until either completion of the transaction with the recipient or a timeout condition before sending an ACK message;

determining whether a result (RES) flag in the data message has been set;

upon determining that the RES flag has been set and the transaction has been completed within a predetermined time period, transmitting a result message disclosing a result of the transaction to the client device; and

upon determining that the RES flag has been set and the transaction could not be completed within the timeout period, transmitting an ACK message to the client device, wherein the ACK message informs the client device that the data message may be purged from memory; and

wherein the S&F proxy is configured to be intermediate the client device and the recipient.

* * * * *