Trials@uspto.gov
Tel: 571-272-7822

Paper 35
Date: August 25, 2023

UNITED STATES PATENT AND TRADEMARK OFFICE

BEFORE THE PATENT TRIAL AND APPEAL BOARD

EDWARDS LIFESCIENCES CORPORATION AND
EDWARDS LIFESCIENCES LLC,
Petitioners,

v.

AORTIC INNOVATIONS, LLC,
Patent Owner.

IPR2022-00556
Patent 10,987,236 B1

Before JOHN G. NEW, JASON W. MELVIN, and RYAN H. FLAX, *Administrative Patent Judges.*

NEW, *Administrative Patent Judge.*

JUDGMENT
Final Written Decision
Determining No Challenged Claims Unpatentable
35 U.S.C. § 318(a)

I. INTRODUCTION

We have jurisdiction to hear this *inter partes* review under 35 U.S.C. § 6, and this Final Written Decision is issued pursuant to 35 U.S.C. § 318(a) and 37 C.F.R. § 42.73. For the reasons set forth below, we determine that Petitioners Edwards Lifesciences Corporation and Edwards Lifesciences LLC (collectively "Petitioner") have failed to establish by a preponderance of the evidence that challenged claims 1–4 of Patent Owner Aortic Innovations, LLC's ("Patent Owner") U.S. Patent No. 10,987,236 B1 (Ex. 1001, "'236 patent") is unpatentable.

A. Procedural History

On February 7, 2022, Petitioner filed its Petition (Paper 1, "Petition" or "Pet.") seeking *inter partes* review of claims 1–4 of the '236 patent. Patent Owner timely filed a Preliminary Response. Paper 8 ("Prelim. Resp."). On September 8, 2022, and pursuant to 35 U.S.C. § 314, we instituted *inter partes* review of challenged claims 1–4 of the '236 patent (Paper 10, "Institution Decision" or "Dec.").

After institution of trial, Patent Owner filed a Response (Paper 18, "PO Resp."), to which Petitioner filed a Reply (Paper 22, "Pet. Reply"), and Patent Owner, in turn, filed a Sur-Reply (Paper 27, "PO Sur-Reply").

Oral argument was held on June 16, 2023. A transcript of the oral argument is included in the record. Paper 34 ("Hearing Tr.").

B. Related Proceedings

Petitioner identifies as related matters *Edwards Lifesciences Corp. v. Aortic Innovations LLC*, PR2021-01527, challenging claims of US 10,792,172 B2 (the "'172 patent") (Final Written Decision entered March 10, 2023) and *Edwards Lifesciences Corp. v. Aortic Innovations, LLC*, IPR2021-01584, challenging claims of US 10,857,011 B2 (the "'011 patent") (Final Written Decision entered March 28, 2023). Pet. 108–109. Petitioner also identifies *Edwards Lifesciences Corp. v. Aortic Innovations LLC*, IPR2022-00193 challenging claims of US 10,881,538 B1 (the "'538 patent") (Final Written Decision entered April 24, 2023) and *Edwards Lifesciences Corp. v. Aortic Innovations LLC*, IPR2022-00034 concerning US 10,966,846 B2 (the "'846 patent") (Final Written Decision entered March 24, 2023). *Id.* at 109. The '236 patent is part of the same patent family, and shares a specification with, the '172, '011, '538, and '846 patents. *Id.*

Petitioner has appealed the Decision entered in IPR2022-00034 to the U.S. Court of Appeals for the Federal Circuit. *See* IPR2022-00034, Paper 51. Patent Owner has appealed the Decision entered in IPR2022-00193 to the same venue. *See* IPR2022-00193, Paper 15. Both appeals remain pending.

Petitioner and Patent Owner identify *Aortic Innovations LLC v. Edwards Lifesciences Corp.*, No. 1-21-CV-01377 (D. Del., Sept. 28, 2021), where Patent Owner asserts, *inter alia*, the '236 patent against Petitioner, as

an additional related matter. *See, e.g.*, Pet. 109; *see also* Ex. 1050 (complaint).

C. Real Parties-in-Interest

Petitioner identifies Edwards Lifesciences Corp. and Edwards Lifesciences LLC, as the real parties-in-interest. Pet. 108. Patent Owner identifies Aortic Innovations, LLC as the real party-in-interest. Paper 3 at 1. There is no dispute over the real parties-in-interest in this proceeding

D. The Instituted Grounds of Unpatentability

Petitioner contends that challenged claims 1–4 of the '236 patent are unpatentable based upon the following grounds, all of which have been instituted in this proceeding:

Ground	Claim(s) Challenged	35 U.S.C. §	Reference(s)/Basis
1	1–4	103[1]	Cribier,[2] Walther[3]

[1] The Leahy-Smith America Invents Act, Pub. L. No. 112-29, 125 Stat. 284 (2011) ("AIA"), amended 35 U.S.C. §§ 102 and 103. Because the challenged claims of the '236 patent have an effective filing date prior to the effective date of the applicable AIA amendments, we refer to the pre-AIA versions of 35 U.S.C. §§ 102 and 103 throughout this Decision.

[2] A. Cribier et al., *Technique of Transcatheter Aortic Valve Implantation with the Edwards-Sapien® Heart Valve Using the Transfemoral Approach*, 34(5) HERZ 347–56 (2009) ("Cribier") Ex. 1012.

[3] T. Walther et al., *Trans-catheter valve-in-valve implantation: in vitro hydrodynamic performance of the SAPIEN + cloth trans-catheter heart*

Ground	Claim(s) Challenged	35 U.S.C. §	Reference(s)/Basis
2	1–4	103	Spenser,[4] Walther
3	1–4	103	Spenser, Spenser II[5]
4	1–4	102(e)	Levi[6]
5	1–4	103	Levi
6	1–4	103	Levi, Walther
7	1–4	103	Levi, Spenser II

Petitioner relies on the Declaration of Nigel Buller, M.D. (Ex. 1003). Patent Owner relies on the Declaration of Stephen J.D. Brecker, M.D. (Ex. 2002). We have reviewed the credentials of Petitioners' declarant, Dr. Buller, and Patent Owner's declarant, Dr. Brecker, and consider both to be qualified to provide the opinions for which their testimony has been submitted.

---

valve in the Carpentier-Edwards Perimount valves, 40 EUR. J. CARDIO-THORACIC SURGERY 1120–26 (2011) ("Walther") Ex. 1007.

[4] Spenser et al. (US 7,510,575 B2, March 31, 2009) ("Spenser") Ex. 1010.

[5] Spenser et al. (WO 2006/005015 A2, January 12, 2006) ("Spenser II") Ex. 1011.

[6] Levi et al. (US 9,393,110 B2, July 19, 2016) ("Levi") Ex. 1008.

E. The '236 patent

The '236 patent is entitled "Transcatheter Aortic Valve Repair Having Improved Paravalvular Seal." Ex. 1001, code (54). The '236 patent issued from Appl. Ser. No. 17/131,869, which claims priority through a series of continuation and divisional applications to Appl. No. 13/706,896, filed on December 6, 2012. *Id.* at codes (21), (60). The '236 patent also claims priority to Provisional Appl. No. 61/723,446, filed on November 7, 2012, and Provisional Appl. No. 61/567,458, filed on December 6, 2011. *Id.* at code (60).[7]

The '236 patent discloses an endograft device, including a transcatheter heart valve, used for endovascular repair of ascending aortic aneurysms. Ex. 1001, col. 2, ll. 51–52. Specifically, the Specification discloses that "[t]he endograft device also includes a valve element that is secured to the balloon-expandable frame at the proximal end of the second prosthetic component." *Id.* at col. 2, ll. 65–67. According to the

---

[7] According to Petitioner, "[d]uring prosecution, Patent Owner stated that the application's 'effective filing date … is believed to be based on Provisional Patent Application No. 61/723,446, filed on November 7, 2012.'" Pet. 26 (quoting Ex. 1049, 274). Petitioner asserts that "the '236 patent is not entitled to a priority date of December 6, 2011 because the '458 provisional does not adequately support or enable the '236 patent's claims." *Id.* Because all the asserted references bear a publication or filing date that antedates the earlier priority date of the '458 provisional, we need not address whether the '236 patent claims are entitled to claim priority to the '458 provisional.

Specification, none of the devices in clinical use for endovascular repair of ascending aortic aneurysms "have been designed with the purpose of endovascular repair of multiple types of ascending aortic aneurysms." *Id.* at col. 2, ll. 35–37.

The Specification describes a need for a device

> that can treat different anatomical variations of ascending aortic aneurysms, create effective proximal and distal seal zones within the aorta, and have a durable valve component, but that also allows for future valve re-interventions. A device is also needed that would allow for treatment of different coronary anatomical variations among the patient population, allow future coronary re-intervention, but that also avoids coronary compression, and enables treatment of possible paravalvular leaks.

Id. at col. 2, ll. 38–46.

Figure 11 of the '236 patent is reproduced below:

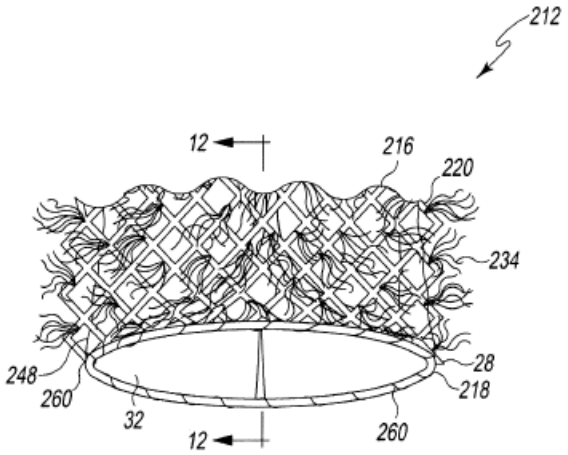

Fig. 11

<u>Figure 11 of the '236 patent is a perspective view of a proximal end of a prosthetic component 212.</u>

Component 212 includes a dual-frame structure with a circular inner frame 218 secured to circular outer frame 216 *via* a plurality of stitches 260. *Id.* at Fig. 11, col. 14, ll. 6–9.

Figure 13 of the ’236 patent depicts a different view of the relevant portion of the invention and is reproduced below.

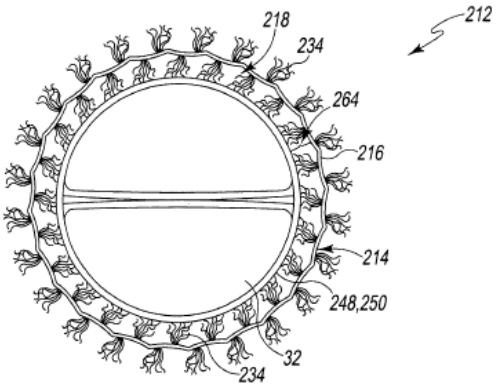

Fig. 13

<u>Figure 13 of the ’236 patent depicts a plan view of the prosthetic device 212</u>

As illustrated in Figure 13, the device with circular dual frame component 214 includes an outer frame 216 secured to a balloon-expandable inner frame 218. *Id.* at Fig. 13, col. 14, ll. 6–8.

As also shown in Figures 11 and 13, the inner frame 218 houses the prosthetic valve 32. Ex. 1001, Fig. 13, col. 13, ll. 42. Collagen fibers 234 extend outwardly and inwardly from outer frame 216. *See id.* at Fig. 13, col. 12, ll. 43, 46–48. Outer frame 216 is a grid with diagonally oriented members as compared to those at the proximal end of the device. *See* Fig. 11. Figures 11 and 13 further illustrate fibers 234 extending outwardly from proximal section 220 and inwardly into the passageway formed by the

stent. *Id.* at Figs. 11, 13, col. 14, ll. 30–33. According to the Specification, these collagen fibers 234 "aid in preventing paravalvular leaks and migration of the proximal component 212 within the aortic walls." *Id.* at col. 12, ll. 44–45.

The Specification further describes "[b]alloon-expandable frame 218 . . . as a balloon-expandable tubular stent 244." Ex. 1001, col. 13, ll. 41–43. "[S]tent 244 is tubular and is constructed of a metallic material, such as, nitinol, stainless steel, or other implant grade metallic material, in an open-cell configuration." *Id.* at col. 13, ll. 46–48. "When the inner frame 218 is unexpanded, the outer surface 248 of the stent 244 is spaced apart from the fibers 234 attached to the outer frame 216." *Id.* at Fig. 13, col. 14, ll. 13–16 When inner frame 218 is expanded, outer surface 248 of stent 244 engages fibers 234 through covering material 250, thereby closing gap 264 so that fibers 234 and covering material 250 create a seal between inner frame 218 and outer frame 216. *Id.* at Fig. 13, col. 14, ll. 19–32.

F. Representative Claim

Challenged claim 1 is the sole independent claim of the '236 patent, and is representative of the claims on appeal. Claim 1 recites:

> 1. A transcatheter aortic valve assembly comprising: an outer frame formed from a metallic material;
>
> an inner frame that engages a prosthetic heart valve having prosthetic leaflets, wherein the inner frame includes a cylindrically extending polymeric inner graft covering extending at least partially radially outwardly of the

prosthetic heart valve and radially inwardly of the outer frame for providing sealing to the prosthetic heart valve,

wherein the outer frame is secured to the inner graft covering by stitching;

a first portion of fibers positioned radially outwardly of the outer frame that is configured to form a first sealing interface against the annulus and native valve leaflets of the patient when the first portion of fibers is compressed thereagainst,

wherein the first portion of fibers extend radially outwardly of the outer frame,

wherein the first portion of fibers is non-metallic; and a second portion of fibers carried by the outer frame that is configured to form a second sealing interface against the outer frame when the second portion of fibers is compressed thereagainst

wherein the second portion of fibers is non-metallic,

wherein the first portion of fibers and the second portion of fibers are in overlapping radial alignment,

wherein the transcatheter aortic valve is configured to be positioned in a patient so that the first sealing interface is in overlapping radial alignment with native valve leaflets of the aorta to seal thereagainst,

wherein the valve assembly is free of an outer graft covering between the first portion of fibers and the outer frame,

wherein the valve assembly has a radially compressed orientation and a radially expanded orientation,

wherein the valve assembly is balloon expandable to the radially expanded orientation and,

wherein expansion of the valve assembly is configured to compress the first portion of fibers and the second portion of fibers to form the respective first sealing interface and second sealing interface.

Ex. 1001, cols. 21–22, ll. 14–19.

II. ANALYSIS

A. Level of Ordinary Skill in the Art

Petitioner contends that a person of ordinary skill in the art in November 2012 would have been an interventional cardiologist with a working knowledge of heart valve designs and endovascular prostheses. Pet. 28. Petitioner asserts that such a skilled artisan would, where necessary, work with a medical device engineer to experiment with or manufacture a prosthetic heart valve. *Id.* at 28–29 (citing Ex. 1003 ¶ 45).

Patent Owner does not expressly challenge Petitioner's definition. Because Petitioner's definition is commensurate with the level of skill reflected by the '236 patent and the prior art, we adopt Petitioner's characterization of a person of ordinary skill in the art as being an interventional cardiologist with a working knowledge of heart valve designs and endovascular prostheses. Such a person would, when necessary, work with a medical device engineer to experiment with, or manufacture, a prosthetic heart valve. *See, e.g.*, Exs. 1006, 1010, 1030, 1033; *see also Okajima v. Bourdeau*, 261 F.3d 1350, 1355 (Fed. Cir. 2001).

B. Claim construction

The Board applies the same claim construction standard that would be used to construe the claim in a civil action under 35 U.S.C. § 282(b). *See* 37 C.F.R. § 100(b) (2020). Under that standard, claim terms "are generally

given their ordinary and customary meaning" as understood by a person of ordinary skill in the art at the time of the invention. *Phillips v. AWH Corp.*, 415 F.3d 1303, 1312–13 (Fed. Cir. 2005) (en banc). "In determining the meaning of the disputed claim limitation, we look principally to the intrinsic evidence of record, examining the claim language itself, the written description, and the prosecution history, if in evidence." *DePuy Spine, Inc. v. Medtronic Sofamor Danek, Inc.*, 469 F.3d 1005, 1014 (Fed. Cir. 2006) (citing *Phillips*, 415 F.3d at 1312–17). Extrinsic evidence is "less significant than the intrinsic record in determining 'the legally operative meaning of claim language.'" *Phillips*, 415 F.3d at 1317 (quoting *C.R. Bard, Inc. v. U.S. Surgical Corp.*, 388 F.3d 858, 862 (Fed. Cir. 2004)).

Petitioner argues that no claim terms require additional construction beyond the *Phillips* standard enunciated above. Pet. 23 (citing 37 C.F.R. § 42.100(b); *Phillips*, 415 F.3d 1312–13). Patent Owner does not dispute Petitioner's assertion and we consequently apply the claim terms according to their plain and ordinary meaning, as would have been understood by a person of ordinary skill in the art at the time of the invention, without further construction. If any claim language requires interpretation to analyze patentability based on the parties' positions and evidence, we discuss such interpretation in our patentability analysis below.

C. Principles of law

1. Burden of Proof

"In an [*inter partes* review], the petitioner has the burden from the

onset to show with particularity why the patent it challenges is unpatentable." *Harmonic Inc. v. Avid Tech., Inc.*, 815 F.3d 1356, 1363 (Fed. Cir. 2016) (citing 35 U.S.C. § 312(a)(3) (requiring *inter partes* review petitions to identify "with particularity . . . the evidence that supports the grounds for the challenge to each claim")). Therefore, in an *inter partes* review, the burden of proof is on the Petitioner to show that the challenged claims are unpatentable; that burden never shifts to the patentee. *See* 35 U.S.C. § 316(e); *In re Magnum Oil Tools Int'l, Ltd.*, 829 F.3d 1364, 1375 (Fed. Cir. 2016) (citing *Dynamic Drinkware, LLC v. Nat'l Graphics, Inc.*, 800 F.3d 1375, 1378 (Fed. Cir. 2015)).

2. Anticipation

"A claim is anticipated only if each and every element as set forth in the claim is found, either expressly or inherently described, in a single prior art reference." *Schering Corp. v. Geneva Pharms.*, 339 F.3d 1373 (Fed. Cir. 2003) (quoting *Verdegaal Bros., Inc. v. Union Oil Co. of Cal.*, 814 F.2d 628, 631 (Fed. Cir. 1987)). It is well settled that "a reference can anticipate a claim even if it 'd[oes] not expressly spell out' all the limitations arranged or combined as in the claim, if a person of skill in the art, reading the reference, would 'at once envisage' the claimed arrangement or combination." *Kennametal, Inc. v. Ingersoll Cutting Tool Co.*, 780 F.3d 1376, 1381 (Fed. Cir. 2015) (quoting *In re Petering*, 301 F.2d 676, 681 (C.C.P.A. 1962)).

3. Obviousness

A patent claim is unpatentable under 35 U.S.C. § 103 if the differences between the claimed subject matter and the prior art are such that the subject matter as a whole would have been obvious at the time the invention was made to a person having ordinary skill in the art to which said subject matter pertains. *KSR Int'l Co. v. Teleflex Inc.*, 550 U.S. 398, 406 (2007). The question of obviousness is resolved on the basis of underlying factual determinations including: (1) the scope and content of the prior art; (2) any differences between the claimed subject matter and the prior art; (3) the level of ordinary skill in the art; and (4) objective evidence of nonobviousness. *Graham v. John Deere Co.*, 383 U.S. 1, 17–18 (1966).

In determining obviousness when all elements of a claim are found in multiple pieces of prior art, "the factfinder must further consider the factual questions of whether a person of ordinary skill in the art would be motivated to combine those references, and whether in making that combination, a person of ordinary skill would have had a reasonable expectation of success." *Dome Patent L.P. v. Lee*, 799 F.3d 1372, 1380 (Fed. Cir. 2015); *see also WMS Gaming, Inc. v. Int'l Game Tech.*, 184 F.3d 1339, 1355 (Fed. Cir. 1999) ("When an obviousness determination relies on the combination of two or more references, there must be some suggestion or motivation to combine the references."). "Both the suggestion and the expectation of success must be founded in the prior art, not in the applicant's disclosure." *In re Dow Chemical Co.*, 837 F.2d 469, 473 (Fed. Cir. 1988); *see also In re Magnum Oil Tools*, 829 F.3d at 1381 (finding a party that petitions the

Board for a determination of unpatentability based on obviousness must show that "a skilled artisan would have been motivated to combine the teachings of the prior art references to achieve the claimed invention, and that the skilled artisan would have had a reasonable expectation of success in doing so").

An obviousness analysis "need not seek out precise teachings directed to the specific subject matter of the challenged claim, for a court can take account of the inferences and creative steps that a person of ordinary skill in the art would employ." *KSR*, 550 U.S. at 418; *see In re Translogic Tech, Inc.*, 504 F.3d 1249, 1259 (Fed. Cir. 2007). In *KSR*, the Supreme Court also stated that an invention may be found obvious if trying a course of conduct would have been obvious to a person of ordinary skill in the art:

> When there is a design need or market pressure to solve a problem and there are a finite number of identified, predictable solutions, a person of ordinary skill has good reason to pursue the known options within his or her technical grasp. If this leads to the anticipated success, it is likely the product not of innovation but of ordinary skill and common sense. In that instance the fact that a combination was obvious to try might show that it was obvious under § 103.

550 U.S. at 421. "*KSR* affirmed the logical inverse of this statement by stating that § 103 bars patentability unless 'the improvement is more than the predictable use of prior art elements according to their established functions.'" *In re Kubin*, 561 F.3d 1351, 1359–60 (Fed. Cir. 2009) (citing *KSR*, 550 U.S. at 417).

We analyze the asserted challenges to patentability in accordance with the above-stated principles.

D. Grounds 1–7: "wherein the valve assembly is free of an outer graft covering between the first portion of fibers and the outer frame"

Challenged independent claim 1, from which each of claims 2–7 depends, expressly recites "wherein the valve assembly is free of an outer graft covering between the first portion of fibers and the outer frame." Ex. 1001, col. 2, ll. 8–10. Petitioner argues that Spenser II, Walther, or Levi teaches this limitation of claim 1. *See* Pet. 47–49, 74–76, 97–99. Because we find this issue to be dispositive of this *inter partes* review, we focus our analysis upon this limitation.

1. Overview of Spenser II (Ex. 1011)

Spenser II is a PCT Publication that published on Jan. 12, 2006. Ex. 1011, codes (10), (43). On its face, therefore, Spenser II qualifies as prior art under pre-AIA 35 U.S.C. § 102(b).

Spenser II is directed to "the prevention, detection, and repair of paravalvular leaks around cardiac valve prostheses." Ex. 1011 ¶ 1. Spenser II teaches that prosthetic valves may be implanted "either through open heart surgery or by use of newer percutaneous methods," but with both methods paravalvular leaks are a known side effect." *Id.* ¶ 11. Spenser II further notes that "[p]ercutaneous introduction of medical devices is a preferred surgical procedure" and "considered safer and less invasive." *Id.*

¶ 12.

Figure 22 of Spenser II is reproduced below:

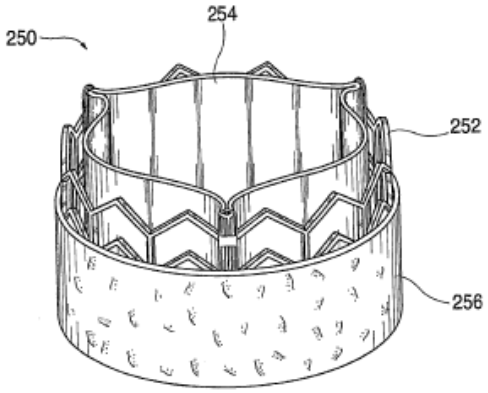

FIG. 22

Figure 22 of Spenser II is a perspective view of an embodiment of the prosthetic valve

Spenser II's Figure 22 shows an embodiment including a layer of compressible material, such as a cloth material, along an exterior surface of a stented valve. Ex. 1011 ¶ 85. Specifically, Figure 22 illustrates stented valve 250 including a circular stent structure 252 surrounding a valvular structure 254. *Id.* at Fig. 22, ¶ 144. "[S]tent structure 252 is preferably made of a deformable material, such as stainless steel, adapted for radial expansion using a balloon catheter. The valvular structure 254 forms three leaflets and is illustrated in the open configuration." *Id.* at ¶ 144. The device further includes circular layer of compressible material 256 surrounding the outside of stent structure 252. *Id.* at Fig. 22, ¶ 145. "The material may extend partially around the stent structure or may extend entirely around the stent structure, such as in the form of a sleeve," and may be formed of PET. *Id.* "[T]he compressible material 256 may resemble a

cloth or fabric having small fibers extending from the surface of the material." *Id.* This "compressible material expands after deployment at a treatment site" and "fills the gaps between the stented valve and the surrounding tissue," which "creates a mechanical seal that prevents paravalvular leakage." *Id.* "In one preferred embodiment, the compressible material is formed of polyethylene terephthalate (PET) and has a thickness ranging from about 1 to 5 mm." *Id.*

2. Overview of Walther (Ex. 1007)

Walther is an article published in the European Journal of Cardio-thoracic Surgery, with a copyright date of 2011. Ex. 1007, 1120. Petitioner contends that Walther was published online on April 3, 2011, and qualifies as prior art under pre-AIA 35 U.S.C. § 102(b). Pet. 22. Patent Owner argues that Petitioner has failed to demonstrate that Walther is available as prior art. Prelim. Resp. 86–88.[8]

Walther is directed to a method of deploying a trans-catheter valve in a previously implanted degenerative bioprosthetic valve. Ex. 1007, 1120. Specifically, Walther describes implanting an Edwards SAPIEN transcatheter heart valve ("THV") cloth valve, "which is identical to the

[8] For purposes of this Decision, we need not resolve whether Walther qualifies as prior art because, for the reasons explained below, we are not persuaded that Walther discloses the dispositive limitation identified above.

SAPIEN model, but has an added outer cloth for implantation into a degenerative bovine pericardium, Carpentier-Edwards Perimount (CEP) bioprosthetic valve." *Id.* Walther discloses that:

> The CEP surgical valves are made with a base that is more rigid than other valves. When a SAPIEN™ valve is expanded in the CEP valve, the rigid base does not easily conform to the profile of the expanded stent frame, which leaves gaps between the two valves, resulting in higher paravalvular leak. The addition of an outer cloth to the SAPIEN™ cloth valve is designed to reduce paravalvular leak by creating a seal between the two valves and improve resistance to migration with better 'fit' within surgical Perimount valves.

Id. Additionally, Walther discloses that the outer cloth "reduce[s] paravalvular leak," "increase[s] 'fit' within EW surgical Perimount valves [a benchtop valve]," and "promote[s] tissue ingrowth, which further decreases paravalvular leakage." *Id.*

Figure 1 of Walther is reproduced below:

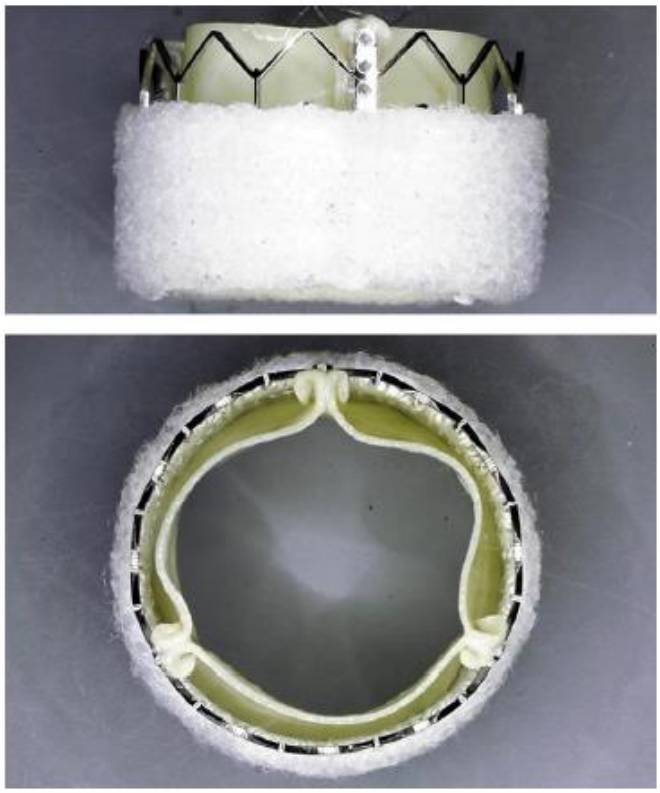

Fig. 1. Cloth valve.

Figure 1 of Walther depicts lateral (top) and longitudinal (bottom) views of the SAPIEN THV

Figure 1 of Walther provides two photographic views (side view and top-down view) of the SAPIEN THV with a cloth encircling the lower two thirds of the valve. *Id.* at Fig. 1, 1121. Walther describes deploying the SAPIEN valves inside "various CEP valves" via the 33F Ascendra system. *Id.* at 1121.

3. Overview of Levi (Ex. 1008)

Levi is a U.S. patent that issued on July 19, 2016, from an application filed on October 5, 2011. Ex. 1008, codes (10), (22), (45). Thus, on its face, Levi qualifies as prior art under pre-AIA 35 U.S.C. § 102(e).

Levi is directed to a prosthetic heart valve. Ex. 1008, col. 1, ll. 16–18. Figure 11 of Levi is reproduced below:

FIG. 11

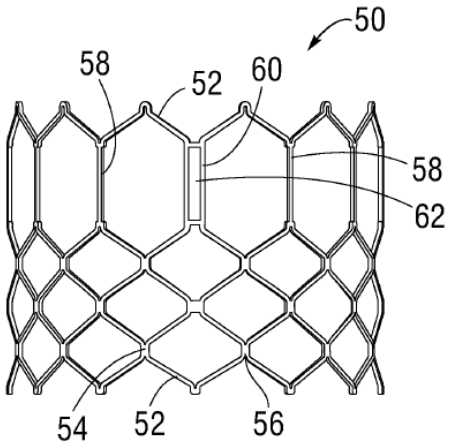

Levi's Figure 11 depicts a frame for use in a prosthetic heart valve

Specifically, Figure 11 illustrates frame 50 that:

> comprises multiple rows of circumferentially extending, angled struts **52** that are connected to each other at nodes, or connecting portions, **54** and **56**. The uppermost row of struts **52** are connected to an adjacent row of struts by a plurality of axially extending struts **58** and commissure window frame portions **60**. Each commissure frame portion **60** defines a slot, or commissure window, **62** for mounting a respective commissure of the valvular structure.

Id. at cols. 8–9, ll. 61–3.

Figure 2 of Levi is reproduced below:

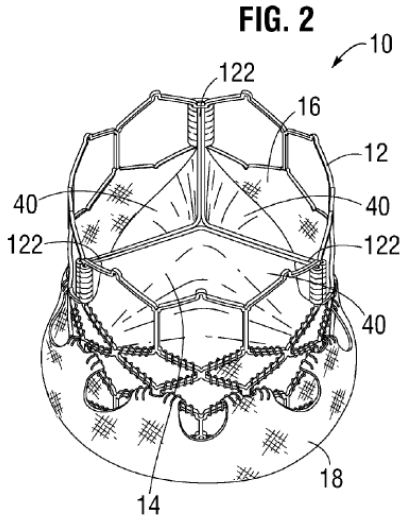

Figure 2 of Levi depicts an exemplary embodiment of a prosthetic heart valve

Figure 2 depicts a prosthetic heart valve 10 including valvular structure 16, surrounded by circular stent or frame 12. *Id.* at Fig. 2, col. 5, ll. 52–58. The bottom portion of frame 12 is covered by inner skirt 16 on the inside of frame 12 and outer skirt 18 on the outside of frame 12. *See id.* at Fig. 2, col. 5, ll. 52–58, col. 9, ll. 24–25, col. 13, ll. 49–50. Valvular structure 16 includes "three leaflets 40, collectively forming a leaflet structure, which can be arranged to collapse in a tricuspid arrangement." *Id.* at Fig. 2, col. 5, ll. 59–61. "[L]eaflets 40 are secured to one another at their adjacent sides to form commissures 122 of the leaflet structures." *Id.* at col. 11, ll. 35–37.

Figure 20 of Levi is reproduced below:

FIG. 20

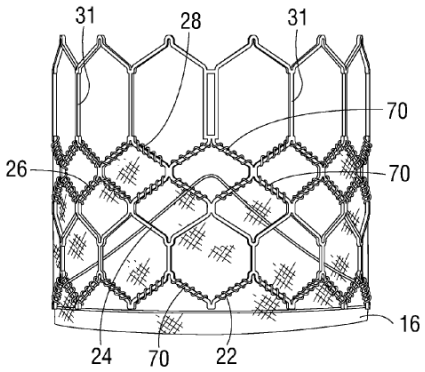

Figure 20 of Levi depicts the assembly of the inner skirt and frame of a prosthetic heart valve

Figure 20 depicts a valve with skirt 16 arranged on frame 12. *Id.* at Fig. 20, col. 10, ll. 5–17. Specifically, frame 12 includes struts 22, 24, 26, and 28. *Id.* at Fig. 20, col. 7, ll. 16–21. "[S]econd, third, and fourth rows of structures 24, 26, and 28 define two intermediate rows of cells defining openings 38. The fourth and fifth rows of struts 28 and 32, along with frame portions 30 and 31, define an upper row of cells defining openings 40." *Id.* at Fig. 20, col. 7, ll. 19–23. "[T]he upper edge of skirt 16 can be tightly secured to structures 28 with sutures 70." *Id.* at Fig. 20, col. 10, ll. 16–18. "[S]kirt 16 can also be secured to the first, second, and third rows of struts 22, 24, and 26, respectively, with sutures 70." *Id.* at col. 10, ll. 28–30.

Figure 42 of Levi is reproduced below:

FIG. 42

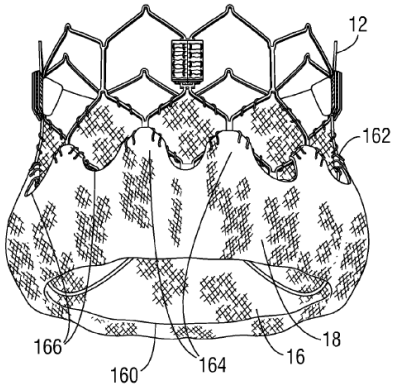

<u>Figure 42 of Levi depicts aspects of an exemplary embodiment of a prosthetic heart valve</u>

Figure 42 illustrates portions of the valve assembly including an outer skirt 18 with projections 164 that are sutured to the outer side of frame 12. *Id*. at Fig. 42, col. 13, ll. 54–61. Skirt 18 includes lower edge 160 that can be sutured to the lower edge of inner skirt 16 at the inflow end of the valve. *Id*. Outer skirt 12 includes excess material between the lower and upper edges. *Id*. at Figs. 2, 43, col. 13, ll. 62–66. Levi discloses that when

> valve **10** is deployed within the body the excess material of the outer skirt **18** can fill in gaps **5** between the frame **12** and the surrounding native annulus to assist in forming a good fluid-tight seal between the valve and the native annulus. The outer skirt **18** therefore cooperates with the inner skirt **16** to avoid perivalvular leakage after implantation of the valve **10**.

Id. at col. 14, ll. 4–9.

4. Analysis

a. Challenged claim 1

In our Final Written Decision in IPR2022-00034 (the "'034 IPR"), we addressed the issue of whether Petitioner had shown, by a preponderance of the evidence, that the limitation of challenged claim 1 reciting "wherein the outer seal is free of an outer graft covering between the fibers and the outer frame" was obvious over Walther, Spenser II, or Levi. In the '034 IPR, Petitioner relied upon these references as teaching this limitation, as it also does in the present *inter partes* review. *See* Pet. 47–49, 74–76, 97–99; IPR2022-00034, Paper 2 at 30, 53–54, 58, 85. In our Final Written Decision in that proceeding, we held that Petitioner had failed to meet its burden of showing that the limitation was anticipated or obvious over the references cited by Petitioner. *See* IPR2022-00034, Paper 50 at 39–51.

In the present *inter partes* review, we are presented with an essentially identical limitation of claim 1 of the '236 patent: "[W]herein the valve assembly is free of an outer graft covering between the first portion of fibers and the outer frame." The slight differences in the language of the respective limitation of claim 6 of the '846 patent in the '034 IPR and challenged claim 1 of the '236 patent do not significantly alter our reasoning. For context, claim 6 of the '846 patent requires that the "outer seal" is free of an external graft covering, whereas challenged claim 1 of the '236 patent more broadly requires that "the valve assembly" is free of an outer graft covering. The differences in the language of the two claims is insignificant, because both claims prohibit an external graft covering

between the "fibers and the outer frame." In the '236 patent, the fibers attached to the outer frame form a "sealing interface against the annulus and native valve leaflets of the patient," whereas in the '846 patent the "outer seal" is "formed of outwardly extending fibers positioned externally to the outer frame."

Similarly, there is little doubt that the "first portion of fibers" recited in claim 1 of the '236 patent corresponds to the "outwardly extending fibers" recited in claim 6 of the '846 patent. The fibers in independent claim 1 of the '236 patent are described as "extend[ing] radially outwardly of the outer frame" whereas in claim 6 of the '846 patent the fibers are described as "outwardly extending" and "positioned externally to the outer frame." The fibers of both claims are depicted in Figures 11 and 13 of the identical Specifications of both the '846 patent and the '236 patent (reproduced below) as "fibers 234 extend[ing] outwardly from the proximal section 220" of the prosthetic valve:

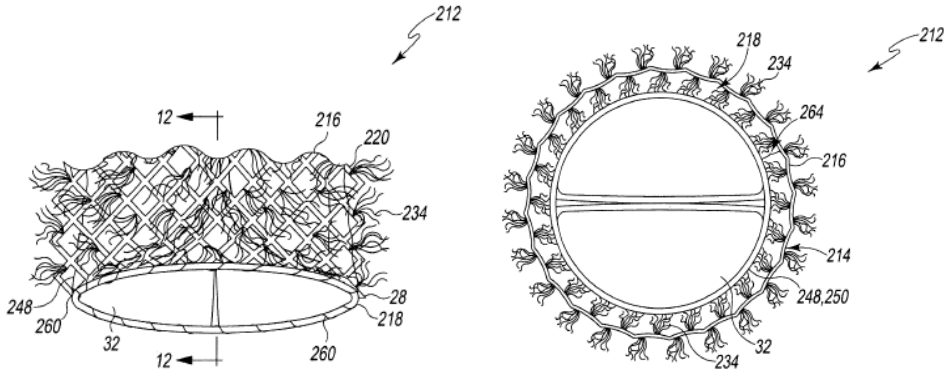

Fig. 11 Fig. 13

Figures 11 and 13 of the '236 patent depict, respectively, perspective and plan views of the prosthetic device 212

Consequently, we discern no significant or patentable difference between these two limitations of claim 6 of the '846 patent and here-challenged claim 1 of the '236 patent.

Petitioner's arguments with respect to both of these limitations in the '034 IPR and in the present *inter partes* review are essentially the same. Briefly, Petitioner argues that that Spenser II teaches that compressible material 256 "is disposed along an outer surface of the stent structure 252" and is, therefore, attached to the frame. Pet. 75 (citing Ex. 1011 ¶ 145, Fig. 22; Ex. 1003 ¶ 192). According to Petitioner, Spenser II's compressible material is also "free of an outer graft covering between the fibers and the outer frame," because Spenser II never depicts or mentions an "outer graft covering" between the compressible material and frame. *Id.* at 75–76 (citing Ex. 1003 ¶ 205).

Petitioner also notes that Spenser, cited in combination with Spenser II in Ground 3, similarly does not depict or otherwise mention an "outer graft covering" on the exterior of frame 575. Pet. 76 (citing Ex. 1010, Fig. 44a). Petitioner reasons that, if Spenser II's compressible material were added to Figure 44a's frame, there would be no "outer graft covering" between the compressible material's fibers and the frame. *Id.* (citing Ex. 1003 ¶ 205).

With respect to Walther, Petitioner argues that Walther discloses that the outer cloth, which is stitched to the valve's perimeter, was the only modification made to SAPIEN. Pet. 47 (citing Ex. 1007, 1120). Petitioner

contends that Walther does not state that the outer cloth includes a "graft covering" and the cloth does not include any visible graft covering.

Pointing to Figure 1 of Walther, Petitioner contends that Walther's outer cloth is also "free of an outer graft covering between the fibers and the outer frame." Pet. 47–48 (citing Ex. 1007, Fig. 1; Ex. 1003 ¶¶ 120, 140). Petitioner argues that Walther's fibers directly contact the frame without any visible intervening graft covering and Walther never mentions an "outer graft covering." *Id.* (citing Ex. 1007, Fig. 1; Ex. 1003 ¶ 120).

With respect to Levi, Petitioner argues that the reference teaches that Levi's valve is also free of an "outer graft covering" between the fibers of the outer skirt and the outer frame. Pet. 97 (citing Ex. 1003 ¶ 265). Petitioner asserts that Levi teaches that the outer skirt is sutured directly to the outer frame and the inner skirt. *Id.* at 97–98 (citing Ex. 1008, col. 13, ll. 58–61). Consequently, argues Petitioner, Levi does not include any "outer graft covering" on the exterior of the outer frame of the prosthetic heart valve. *Id.* at 98 (citing Ex. 1008, Fig. 20; Ex. 1003 ¶¶ 270–271).

Petitioner also argues that a person of ordinary skill in the art would have understood that if Levi's outer skirt is replaced with Walther's outer cloth, or Spenser II's compressible material, there would be no "outer graft covering" between the radially extending fibers of the outer cloth/compressible material (i.e., the first portion) and the outer frame, because Levi does not include any "outer graft covering" on the exterior of the outer frame. Pet. 98–99 (citing Ex. 1003 ¶ 266).

In our Final Written Decision in the '034 IPR, we explained why we concluded that Petitioner had failed to meet its burden of proving, by a preponderance of the evidence, that any of the cited prior art references (*see supra* Section I.D) relied upon by Petitioner anticipate or render obvious the limitation of challenged claim 1 reciting "wherein the valve assembly is free of an outer graft covering between the first portion of fibers and the outer frame." *See* IPR2022-00034, Paper 50 at 39–52. We adopt the same reasoning here.

As an initial matter, there is little disagreement between the parties and their experts that PET can be a graft covering. However, the disputed limitation requires something more. Specifically, it requires that "the outer seal is free of an outer graft covering between the fibers and the outer frame."

We are not persuaded that Petitioner has demonstrated, by a preponderance of the evidence of record, that Levi, Spenser II, or Walther, upon which Petitioner relies, teaches or suggests the incorporated limitation of claim 1 reciting "wherein the valve assembly is free of an outer graft covering between the first portion of fibers and the outer frame." In our analysis, we must first determine what is meant by the claim term "outer graft covering."

As the plain language of the claim term suggests, an "outer graft covering" must cover some, or all, of the metallic outer frame of the prosthetic heart valve. Consequently, and according to the plain and ordinary meaning, we understand an "outer graft covering" to be a structure,

such as a cloth, fabric or other material, that covers all, or part of, the metallic outer frame. Importantly, because an outer graft covering must cover the external surface of the outer frame, and specifically "between the first portion of fibers and the outer frame," we understand this claim term to mean that the cover must extend over (i.e., "cover") not only the struts and members of the metallic outer frame, but must also cover the open spaces, or interstices, in the spaces between those struts and members.

Consequently, the ordinary and customary meaning of the limitation "free of an outer graft covering between the fibers and the outer frame" is that there can be no such outer graft covering present anywhere between the outwardly extending fibers and the metallic outer frame.

The Specification of the '236 patent further reinforces of the ordinary meaning of an "outer graft covering," as claimed. Figure 11 of the '236 patent is reproduced again below:

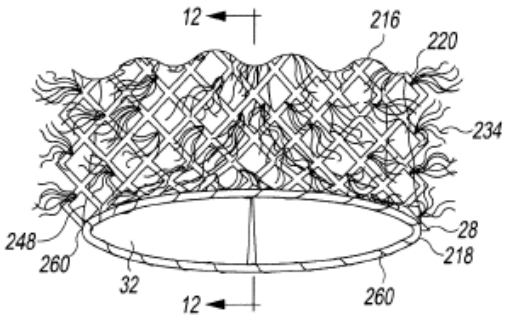

Fig. 11

<u>Figure 11 of the '236 patent is a perspective view of a proximal end of a prosthetic component 212</u>

Figure 11 depicts the outer seal, consisting of outwardly (i.e., radially) extending fibers 234 positioned externally to the outer frame 216, the fibers being directly attached at their proximal termini to the outer frame 216. No structure or material is depicted as covering the spaces between the struts and members of the frame or as being between the fibers and the frame. Figure 9 of the ’236 patent, a segment of which is reproduced below, depicts a similar arrangement:

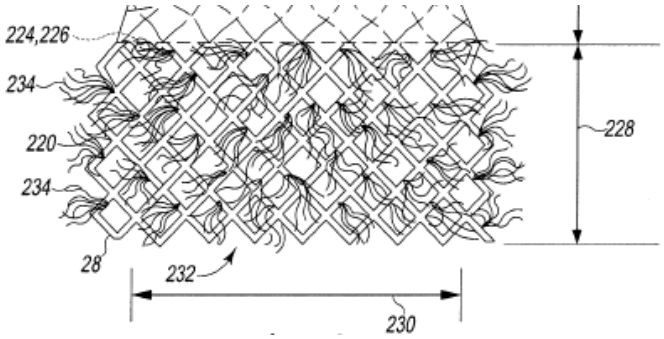

Figure 9 (detail) of the ’236 patent depicts a lateral view of the claimed invention (*see* Ex. 1001, Fig. 19)

Figure 13 of the ’236 patent, reproduced again below, depicts a similar situation from a view through the longitudinal axis of the prosthetic heart valve:

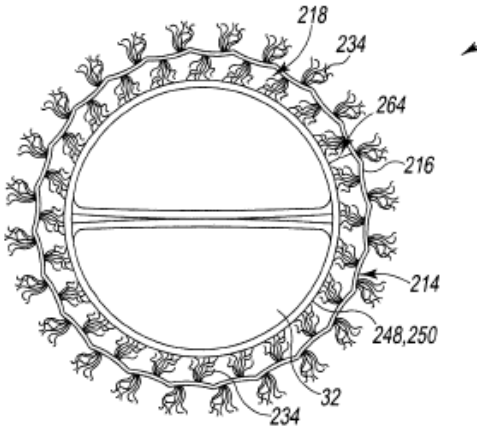

Fig. 13

Figure 13 of the ’236 patent depicts a plan view of the prosthetic device 212

The Specification further discloses, with respect to the outwardly extending fibers, that:

> In some embodiments, a plurality of fibers *may be attached to the third section of the self-expanding frame* [i.e., the outer frame surrounding the heart valve]. When the balloon-expandable frame is in the expanded position, the outer surface of the balloon-expandable frame may be engaged with the plurality of fibers.

Ex. 1001, col. 3, ll. 26–30 (emphasis added). The Specification elaborates that:

> In the illustrative embodiment, collagen fibers **234** are attached to the proximal section **220** to aid in preventing paravalvular leaks and migration of the proximal component **212** within the aortic walls. The fibers **234** extend outwardly from the proximal section **220** and inwardly into the passageway **232**.

Id. at col. 12, ll. 43–48.

The ’236 patent Specification further discloses that:

> [T]he proximal section **360** of the self-expanding frame **350** [i.e., the portion surrounding the prosthetic valve, *see, e.g.*, col. 4, ll. 44–49] is formed in an open-cell stent configuration, and each of the sections **62**, **64** is formed in a Z-stent configuration. It should be appreciated that in other embodiments the sections **360**, **62**, **64** may be formed in a single configuration, including the open-cell stent configuration, mesh-like stent configuration, or Z-stent configuration. The sections **60**, **62**, **64** may also be formed as a single monolithic component.
>
> *[T]he outer surface **314** of the proximal section **360** of the frame **350** is uncovered such that fluid is permitted to pass through the openings **318***. The outer surface **316** of the sections **62**, **64** are covered with low profile polyester, ePTFE, or other nonporous covering material **84** such that fluid is prevented from passing through the surface **320**.

Ex. 1001, col. 16, ll. 50–65 (emphasis added).

Given these disclosures of the '236 patent Specification, as well as the ordinary and customary meaning of the claim language (as would be understood by the ordinarily skilled artisan), as we explained above, an "outer graft covering" is a material or structure that covers at least a portion of the outer surface of the prosthetic heart valve, such that both the struts and members of the metallic outer frame, as well as the interstices between those struts and members, is covered by the outer graft covering.

Furthermore, our understanding of this claim limitation is consistent with that argued by Patent Owner's expert. As Dr. Brecker explained:

> The fibers in the patent's figures are sparsely distributed. See Figs. 8–9, 11–16, 20–22. Moreover, as is particularly clear in Figure 13 (but also present elsewhere), there are gaps and spaces between the fibers that extend to the frame. These gaps and spaces were, I believe, counterintuitive because a POSITA would

> have, at the time, favored a solid, non-porous, graft material to address PVL—like the ones seen in Walther, Spenser II, and Levi. *See also* Ex. 1003 [Buller-Decl.] ¶¶153 (POSITA "would have understood that the openings between the fibers must be small … to form an effective sealing interface … If the openings were too wide, blood may disadvantageously leak through the openings."), 156. That a sparse distribution of fibers with significant gaps and spaces would be porous, at least until compressed within the body would form a seal is an unexpected result.

Ex. 2103 ¶ 160.

Bearing this claim term construction in mind, we deal with each prior art reference in turn.

i. Levi

In our Decision to Institute, we preliminarily determined that the PET "outer skirt" of Levi constitutes an "outer graft covering." Dec. 47 (citing IPR2022-00034, Paper 14 at 27). As we stated in that Decision, with reference to the '034 IPR:

> Similarly, Petitioner provides no persuasive evidence that Levi discloses the limitation of disclaimed independent claim 1 (from which challenged claim 6 depends) reciting "wherein the outer seal is free of an outer graft covering between the fibers and the outer frame." We agree with Patent Owner that, having argued that "Levi teaches that the outer skirt is sutured directly to the outer frame and the inner skirt" and "Levi does not include any 'outer graft covering' on the exterior of the outer frame," Petitioner has failed to recognize that Levi's outer skirt is an "outer graft covering."

Id. at 51–52 (quoting IPR2022-00034, Paper 14 at 27). We concluded, for these same reasons, that the outer skirt of Levi corresponded to the "outer graft covering" of challenged claim 1. *Id.* This was particularly so because we also concluded in that Decision that the outer skirt of Levi does not meet the requirements of an outwardly extending fibers that form a first sealing interface. *Id.* at 51. Specifically, we concluded that:

> We agree with Patent Owner that nothing in Levi suggests that the "woven PET fabric" used to form the outer skirt expressly or inherently meets this requirement. We are not persuaded by Petitioner's contention that the laser-cut woven PET disclosed for use in Levi's outer skirt would necessarily exhibit the type of "hairiness" described for PET yarn used in other textile applications.

Id. at 51 (quoting IPR2022-00034, Paper 14 at 26 (citations omitted)).

Petitioner does not contest these conclusions in its Reply to Patent Owner's Response, or otherwise provide any additional argument or evidence to demonstrate that the outer skirt of Levi does not constitute the outer graft covering prohibited by challenged claim 1. Consequently, our initial determinations stand.

Furthermore, our understanding of an outer graft covering as a material or structure that covers at least a portion of the outer surface of the prosthetic heart valve, such that both the struts and members of the metallic outer frame, as well as the interstices between those struts and members, is covered by the outer graft covering, reinforces our prior conclusion that the outer skirt of Levi constitutes an outer graft covering that is prohibited by challenged claim 1. We consequently conclude that Petitioner has not met

its burden with respect to demonstrating, by a preponderance of the evidence, that Levi teaches or suggests the limitation reciting "wherein the outer seal is free of an outer graft covering between the fibers and the outer frame."

ii. Spenser II

Spenser II teaches:

> In accordance with yet another preferred embodiment, a stented valve is provided wherein a compressible material, such as a clot[h] or fabric, extends around an exterior portion of the stent. The compressible material may be formed of polyethylene terephthalate (PET) and is configured to expand into the gaps.

Ex. 1011 ¶ 55. More specifically, Spenser II teaches that:

> To reduce or prevent paravalvular leakage, a layer of compressible material 256 is disposed along an outer surface of the stent structure 252. The material may extend partially around the stent structure or may extend entirely around the stent structure, such as in the form of a sleeve. In one preferred embodiment, the compressible material is formed of polyethylene terephthalate (PET) and has a thickness ranging from about 1 to 5 mm. *In certain configurations, the compressible material 256 may resemble a cloth or fabric having small fibers extending from the surface of the material*. In various embodiments, the fibers may be straight, curved or hook-shaped. The compressible material expands after deployment at a treatment site. As the compressible material expands, it fills the gaps between the stented valve and the surrounding tissue. Accordingly, the compressible material creates a mechanical seal that prevents paravalvular leakage.

Id. at ¶ 145 (emphasis added).

Figure 22 of Spenser II, reproduced below, depicts an embodiment corresponding to these descriptions:

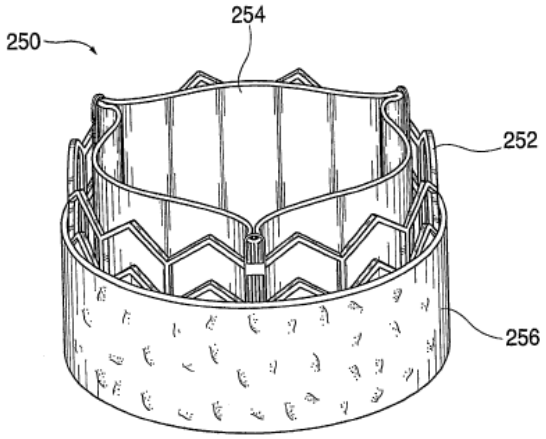

FIG. 22

Spenser II thus teaches a "a compressible material, such as a clot[h] or fabric, extending around the exterior portion" of the valve, as depicted in Figure 22, and may be "in the form of a sleeve." Ex. 1011 ¶¶ 55, 145. This cloth or material can be made of PET, and we find that a person of ordinary skill in the art would understand that a cloth or fabric can comprise woven fibers, as in the woven outer skirt of Levi. Ex. 1011 ¶ 145; Ex. 1008, col. 13, ll. 50–54; *see also* Ex. 1003 ¶ 118 (Petitioner's expert citing Merriam-Webster, *Cloth*, *available at*: https://www.merriam-webster.com/dictionary/cloth) (last visited August 8, 2023) (defining "cloth" as "a pliable material made usually by weaving, felting, or knitting natural or synthetic fibers and filaments")).

Both the description and Figure 22 of Spenser II show a cloth covering the proximal outer surface of the metallic outer frame of the

prosthetic heart valve, including the spaces between the struts and members of the frame. Furthermore, the reference discloses that any fibers extending outwardly from the cloth arise from the surface of the cloth, and are not attached directly to the frame, as depicted in Figure 11 of the '236 patent Specification. Thus, even were such fibers made of the same material as the cloth, which is not clear from the reference's disclosure, the cloth would be between the surface-residing fibers and the metallic outer frame.

We conclude that a person of ordinary skill in the art would have recognized that the sleeve-like cloth or fabric of Spenser II corresponds to an outer graft covering between its fibers and its outer frame, and such a covering would be between Spenser II's surface fibers and its metallic outer frame. Such an outer graft cover is prohibited by the language of challenged claim 1, even if it and associated extending fibers are of the same material.

Petitioner argues that Spenser II does not "disclose or suggest any 'outer graft covering' between the outwardly extending fibers of the outward-facing surface of the compressible material (i.e., first portion) and the stent." Pet. 75–76. We agree that Spenser II does not use the term "outer graft covering." Nevertheless, we find that the Spenser II, including Figure 22, discloses that the cloth or fabric is disposed along the outer surface of the prosthetic heart valve, including over the spaces between the struts and members of the metallic outer frame. We conclude that this structural arrangement would be understood by a skilled artisan as describing that the cloth or fabric constituted an outer cover for the graft (i.e., the prosthetic valve). *See Phillips*, 415 F.3d at 1312–13.

We therefore conclude, for the reasons we have explained, that Petitioner has failed to demonstrate, by a preponderance of the evidence, that Spenser II teaches or suggests "wherein the outer seal is free of an outer graft covering between the fibers and the outer frame."

iii. Walther

Walther teaches benchtop evaluation of the "*in vitro* hydrodynamic performance of the Edwards SAPIEN + cloth trans-catheter heart valve (THV) implanted within the Carpentier-Edwards Perimount (CEP) valve" as a testbed for evaluating prosthetic-valve-in-prosthetic-valve replacement techniques. Ex. 1007, Abstr.

Walther teaches that "[t]he current valve-in-valve study is focused on the use of an Edwards SAPIEN™ trans-catheter heart valve (THV) cloth valve (see Fig. 1), which is identical to the SAPIEN model, but has an added outer cloth." Ex. 1007, 1120. Walther further teaches that:

> The addition of an outer cloth to the SAPIEN™ cloth valve is designed to reduce paravalvular leak by creating a seal between the two valves and improve resistance to migration with better 'fit' within surgical Perimount valves.
>
> *Why is the outer cloth required?*
>
> - reduce paravalvular leak;
> - increase 'fit' within EW surgical Perimount valves; and
> - promote tissue ingrowth, which further decreases paravalvular leakage.

Id. Walther states that the outer cloth layer consisted of "[a]n added poly(ethylene terephthalate) (PET) cloth … stitched onto the perimeter of each SAPIEN valve." *Id.* at 1121.

Walther depicts the SAPIEN-plus-cloth valve in both transverse and longitudinal views in Figure 1, which is reproduced again below:

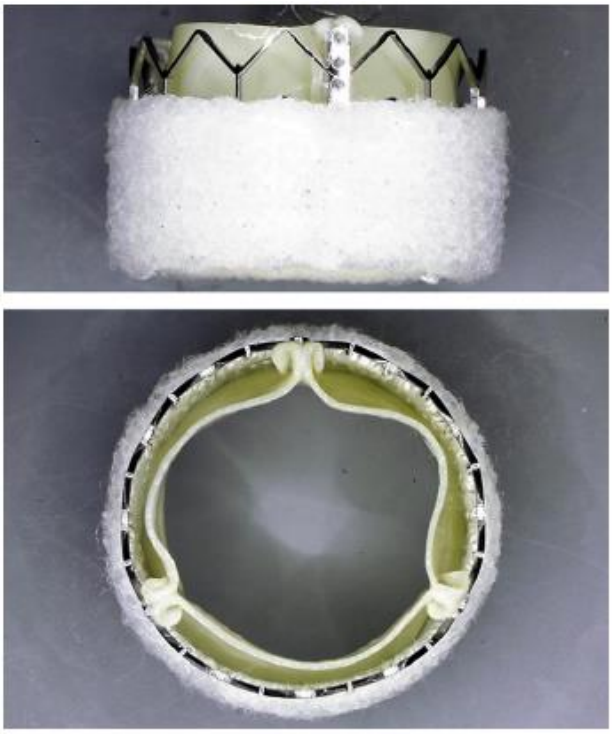

Figure 1 of Walther depicts lateral (top) and longitudinal (bottom) views of the prosthetic SAPIEN-plus-cloth valve

Walther provides no additional details concerning the structure of the SAPIEN-plus-cloth prosthetic valve.

Our reasoning with respect to Walther parallels our reasoning with respect to Spenser II. Walther teaches an outer cloth that circumferentially covers the entire proximal outer surface of the SAPIEN prosthetic valve. *See* Ex. 1007, Fig. 1. Other variants of Walther, such as Petitioner's

SAPIEN 3 and the SAPIEN 3 Ultra TAVRs, also have a cloth cover extending circumferentially over the proximal outer surface, including over the open spaces between the struts and members of the outer frame of the prosthetic valve, and directly adjacent to the outer frame. *See, e.g.*, Ex. 2026, 7, 8. Furthermore, at least a portion of the outer cloth cover must be positioned between the outer frame of the valve and its outwardly extending fibers in a manner prohibited by the language of challenged claim 1 (much as we explained above regarding Spenser II).

We find that a person of ordinary skill in the art would understand that the outer cloth disclosed by Walther (as well as Petitioner's SAPIEN 3 and SAPIEN 3 Ultra variants of the SAPIEN valve disclosed by Walther) is qualitatively different from the examples of the claimed feature of "free of an outer graft covering between the fibers and the outer frame" described in the '236 patent showing the fibers attached directly to, and extending directly from, the struts and members of the outer frame, but leaving the struts and members of the outer frame uncovered. *See, e.g.*, Ex. 1001, col. 16, ll. 50–65, Figs. 9, 11, 13. We conclude that a skilled artisan would have found that the outer cloth of Walther would constitute an "outer graft covering" under our claim construction and that, as plainly shown in the photographs above, this covering resides between the surface fibers and the metal stent portion of the device, and therefore does not satisfy challenged claim 1's limitations.

iv. Conclusion

For the reasons we have explained above, we conclude that Petitioner has failed to demonstrate, by a preponderance of the evidence, that the asserted grounds anticipate or render obvious challenged claim 1 of the ’236 patent.

b. Challenged claims 2–4

Challenged claims 2–4 depend from independent claim 1 and, consequently, incorporate by reference all of the limitations of claim 1, including “wherein the valve assembly is free of an outer graft covering between the first portion of fibers and the outer frame.” *See Monsanto Co. v. Syngenta Seeds, Inc.*, 503 F.3d 1352, 1357 (Fed. Cir. 2007) (holding that a “claim in dependent form shall be construed to incorporate by reference all the limitations of the claim to which it refers” (quoting 35 U.S.C § 112, ¶ 4 (2000))).

Because we conclude that Petitioner has failed to meet its burden of showing, by a preponderance of the evidence, that the cited prior art anticipates or teaches this limitation, we arrive at the same conclusion for challenged claims 2–4.

III. CONCLUSION

For the reasons we have set forth above, and after having analyzed the entirety of the record and assigning appropriate weight to the cited supporting evidence, we determine that Petitioner has failed to establish, by

a preponderance of the evidence, that challenged claims 1–4 of the ’236 patent are unpatentable.

IV. ORDER

Accordingly, it is

ORDERED that Petitioner has failed to show by a preponderance of the evidence that claims 1–4 of the ’236 patent are unpatentable;

FURTHER ORDERED that, because this is a Final Written Decision, parties to the proceeding seeking judicial review of the decision must comply with the notice and service requirements of 37 C.F.R. § 90.2.

Claim(s)	**35 U.S.C. §**	**Reference(s)/Basis**	**Claims Shown Unpatentable**	**Claims Not Shown Unpatentable**
1–4	103	Cribier, Walther		1–4
1–4	103	Spenser, Walther		1–4
1–4	103	Spenser, Spenser II		1–4
1–4	102(e)	Levi		1–4
1–4	103	Levi		1–4
1–4	103	Levi, Walther		1–4
1–4	103	Levi, Spenser II		1–4
Overall Outcome				1–4

For PETITIONER:

Craig S. Summers
Joshua J. Stowell
Brian C. Barnes
KNOBBE, MARTENS, OLSON & BEAR, LLP
2css@knobbe.com
2jys@knobbe.com
brain.barnes@knobbe.com

For PATENT OWNER:

Kenneth J. Weatherwax
Patrick Maloney
Vinson Lin
LOWENSTEIN & WEATHERWAX LLP
weatherwax@lowensteinweatherwax.com
maloney@lowensteinweatherwax.com
lin@lowensteinweatherwax.com