Trials@uspto.gov
571-272-7822

Paper 35
Date: October 23, 2023

UNITED STATES PATENT AND TRADEMARK OFFICE

BEFORE THE PATENT TRIAL AND APPEAL BOARD

AMPHENOL CORP.,
Petitioner,

v.

PPC BROADBAND, INC.,
Patent Owner.

IPR2022-00719
Patent 10,446,983 B2

Before BART A. GERSTENBLITH, GEORGE R. HOSKINS, and FRANCES L. IPPOLITO, *Administrative Patent Judges*.

GERSTENBLITH, *Administrative Patent Judge*.

JUDGMENT
Final Written Decision
Determining All Challenged Claims Unpatentable
35 U.S.C. § 318(a)

I. INTRODUCTION 4
A. Background 4
B. Related Proceedings 5
C. Real Parties in Interest 5
D. The Asserted Grounds of Unpatentability and Declaration Evidence 6
E. The ’983 Patent 7
F. Illustrative Claims 10
G. Level of Ordinary Skill in the Art 11
II. CLAIM CONSTRUCTION 12
III. ANALYSIS 14
A. Legal Standards – Obviousness 14
B. Obviousness over Youtsey, Lionetto, and Horak 15
1. Level of Ordinary Skill in the Art 15
2. Scope and Content of the Prior Art 15
a. Youtsey 15
b. Lionetto 17
c. Horak 19
3. Claim 1 21
a. Preamble 22
b. Element 1[a] 24
c. Elements 1[b], 1[b][i], and 1[b][ii] 26
d. Elements 1[c], 1[c][i], 1[c][ii], and 1[c][iii] 30
e. Element 1[d] 34
i. Summary of Petitioner’s Contentions 35
ii. Differences Between Claim 1 and Youtsey, Lionetto, and Horak 38
(a) Coupler-Body Electrical Grounding Path 38
(b) O-Ring 41
iii. Scope of Prior Art—Grounding Paths in Coaxial Cable Connectors 43

iv. Motivation to Modify Youtsey in Light of Lionetto and Horak 50

(a) Petitioner's First Motivation—Maintain Ground Shield in Loose Connector 50

(b) Petitioner's Second Motivation—Crevice Susceptible to RFI 64

(c) Patent Owner's First Disadvantage—Inferior Environmental Seal 65

(d) Patent Owner's Second Disadvantage—Increased Resistance to Rotation 72

(e) Patent Owner's Third Disadvantage—Increased Cost 87

(f) Analysis and Conclusion as to Motivation to Modify Youtsey 89

v. Reasonable Expectation of Success 90

vi. Objective Indicia of Nonobviousness 92

vii. Weighing of Evidence and Conclusion as to Obviousness . 96

f. Collateral Estoppel 96

g. Conclusion as to Claim 1 97

4. Claims 2–5, 8–15, and 18 97

C. Obviousness over Tarrant and Bell 98

IV. SUMMARY 98

V. ORDER 99

I. INTRODUCTION

A. Background

Amphenol Corp. ("Petitioner") filed a Petition (Paper 2, "Pet.") requesting institution of *inter partes* review of claims 1–5, 8–15, and 18 ("the Challenged Claims") of U.S. Patent No. 10,446,983 B2 (Ex. 1001, "the '983 patent"). PPC Broadband, Inc. ("Patent Owner") filed a Preliminary Response (Paper 6, "Prelim. Resp."). With our prior authorization (*see* Paper 7 (Order)), Petitioner filed a Reply to Patent Owner's Preliminary Response (Paper 8) and Patent Owner filed a Sur-reply (Paper 10). Applying the standard set forth in 35 U.S.C. § 314(a), we instituted an *inter partes* review as to all claims and grounds set forth in the Petition. Paper 11 ("Inst. Dec.").

After institution, Patent Owner filed a Patent Owner Response (Paper 17, "PO Resp."), Petitioner filed a Reply (Paper 22, "Pet. Reply"), and Patent Owner filed a Sur-reply (Paper 27, "PO Sur-reply"). With our authorization, Patent Owner filed an Identification of Improper New Arguments and Evidence in Petitioner's Reply (Paper 24) and Petitioner filed a Joint Chart Regarding Arguments and Evidence in Petitioner's Reply (Paper 25).[1]

An oral hearing was held on July 20, 2023, and the transcript is of record. Paper 34 ("Tr.").

We have jurisdiction pursuant to 35 U.S.C. § 6. This Decision is a Final Written Decision under 35 U.S.C. § 318(a) and 37 C.F.R. § 42.73 as to

[1] We address the issues raised by Papers 24 and 25 below, but only to the extent that we rely in this Decision on arguments and evidence from Petitioner's Reply that Patent Owner asserts is improper.

the patentability of the Challenged Claims. Petitioner bears the burden of proving unpatentability of the Challenged Claims. *Dynamic Drinkware, LLC v. Nat'l Graphics, Inc.*, 800 F.3d 1375, 1378 (Fed. Cir. 2015). To prevail, Petitioner must prove unpatentability by a preponderance of the evidence. *See* 35 U.S.C. § 316(e) (2018); 37 C.F.R. § 42.1(d) (2021). Having reviewed the arguments and the supporting evidence, we determine that Petitioner has shown, by a preponderance of the evidence, that claims 1–5, 8–15, and 18 of the '983 patent are unpatentable.

B. Related Proceedings

The parties identify *PPC Broadband, Inc. v. Amphenol Corp. and Times Fiber Communications, Inc.*, No. 1:21-cv-00654 (D. Del.), as a related matter. Paper 4 (Patent Owner's Mandatory Notices), 1; *see* Pet. 87 (referring to "Delaware Litigation"). The parties also identify IPR2022-00718, IPR2022-00720, and IPR2022-00721 in which Petitioner challenges claims of patents related to the '983 patent. Paper 4, 1; *see* Pet. 87 (identifying three related patents concurrently challenged by Petitioner in *inter partes* review proceedings). Additionally, Patent Owner identifies three patent applications—U.S. Patent Application Nos. 17/196,472, 17/196,508, and 17/196,545. Paper 4, 1.

C. Real Parties in Interest

Petitioner identifies Amphenol Corp., Times Fiber Communications, Inc., and Holland Electronics, LLC as real parties in interest. Pet. 86. Patent Owner identifies PPC Broadband, Inc. and Belden Inc., which Patent Owner indicates "wholly owns PPC Broadband, Inc.," as real parties in interest. Paper 4 at 1.

D. The Asserted Grounds of Unpatentability and Declaration Evidence

Petitioner challenges the patentability of claims 1–5, 8–15, and 18 of the '983 patent on the following grounds:

Claim(s) Challenged	35 U.S.C. §[2]	Reference(s)/Basis
1–5, 8–15, 18	103(a)	Youtsey,[3] Lionetto,[4] Horak[5]
1–5, 8–15, 18	103(a)	Tarrant,[6] Bell[7]

Pet. 1. Petitioner supports its challenge with a Declaration of James Dickens, Ph.D. (Ex. 1005) and Supplemental Declaration of Dr. James Dickens in Support of Petitioner's Reply (Ex. 1026). Patent Owner supports its arguments with a Declaration of Charles A. Eldering, Ph.D. in Support of Patent Owner Preliminary Response (Ex. 2001) and a Declaration of Dr. Charles A. Eldering in Support of Patent Owner Response (Ex. 2042). Additionally, Petitioner cross-examined Dr. Eldering and a transcript of that deposition is of record. Ex. 1027. And, Patent Owner cross-examined Dr. Dickens as to each of his declarations and those transcripts also are of record. Exs. 2041, 2044.

---

[2] The Leahy-Smith America Invents Act ("AIA") included revisions to 35 U.S.C. § 103 that became effective on March 16, 2013. The '983 patent was filed on July 31, 2018, but asserts priority to several patent applications filed before March 16, 2013. Ex. 1001, codes (22), (63). In this Decision, we assume the asserted priority (which has not been challenged) is correct, so we apply the pre-AIA version of § 103 here.

[3] U.S. Patent No. 6,042,422, issued Mar. 28, 2000 (Ex. 1007, "Youtsey").

[4] U.S. Patent No. 4,929,188, issued May 29, 1990 (Ex. 1008, "Lionetto").

[5] U.S. Patent No. 3,879,102, issued Apr. 22, 1975 (Ex. 1009, "Horak").

[6] U.S. Patent No. 5,083,943, issued Jan. 28, 1992 (Ex. 1010, "Tarrant").

[7] U.S. Patent No. 5,882,226, issued Mar. 16, 1999 (Ex. 1011, "Bell").

E. The '983 Patent

The '983 patent is directed to the field of connectors for coaxial cables. *See* Ex. 1001, 1:29–30. It particularly concerns such a connector comprising an electrically conductive member, for maintaining an electrical grounding path through the connector that provides a shield against outside electromagnetic interference with signals being conveyed by the connected coaxial cables. *See id.* at code (57), 1:30–33, 1:46–60.

Figure 1A of the '983 patent is reproduced below.

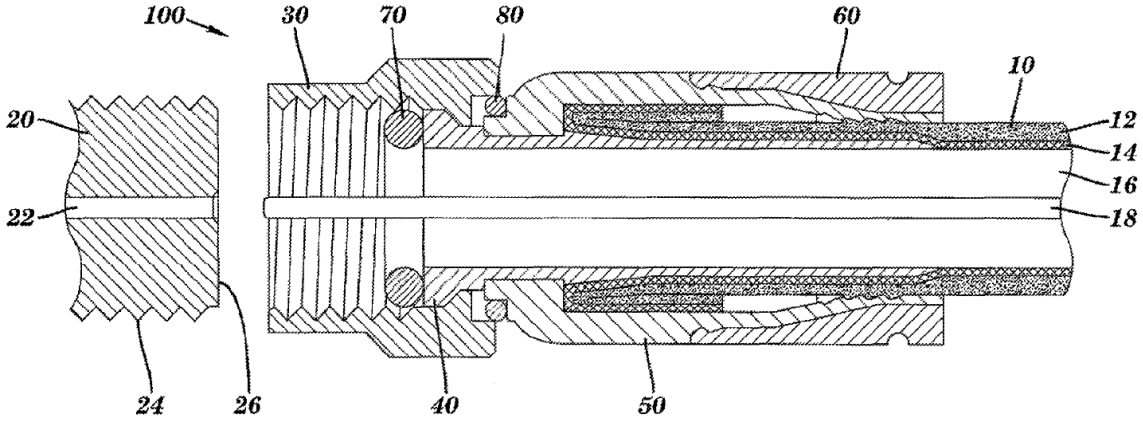

FIG. 1A

Figure 1A is a sectional side view of connector 100 for coaxial cable 10. *See* Ex. 1001, 4:30–31, 5:8–9.

Coaxial cable 10 includes protective outer jacket 12, conductive grounding shield 14, interior dielectric 16, and center conductor 18. *See* Ex. 1001, 5:9–12. Protective outer jacket 12 protects the other components of coaxial cable 10 from damage caused by exposure to dirt or moisture and corrosion. *See id.* at 5:18–21. Conducting grounding shield 14 may be comprised of conductive materials that are suitable for providing an electrical ground connection, to prevent external electromagnetic noise from

reaching center conductor 18. *See id.* at 5:26–40. Center conductor 18 is a conductive material that propagates electrical signals down the length of coaxial cable 10. *See id.* at 5:12; *see also* Pet. 2 ("[A] coaxial cable includes . . . a copper wire . . . through which the data signals travel.").

Connector 100 includes interface port 20, coupling member 30, post 40, connector body 50, fastener member 60, and two conductive members such as o-rings 70 and 80. *See* Ex. 1001, 5:53–54, 6:19–24. When connector 100 is fully assembled onto coaxial cable 10, port 20 is received within first end 32 of coupling member 30 via the port's threaded exterior surface 24, and lip 36 of coupling member 30 rotatably engages flange 46 of post 40. *See id.* at Figs. 1A, 2, 3, 5:58–59, 6:32–49, 7:39–43.

Conductive member 70 functions to extend the grounding shield provided by shield 14 of coaxial cable 10 across the body of connector 100, in the following fashion. First, post 40 is inserted between shield 14 and dielectric 16 of coaxial cable 10, to ensure effective electrical contact between post 40 and shield 14. *See* Ex. 1001, 7:49–64, 13:17–29. Second, conductive member 70 is in physical contact between post 40 and coupling member 30, to ensure an effective electrical path therebetween. *See id.* at 7:4–22, 7:45–49, 9:66–10:7, 11:13–23. Conductive member 70 additionally functions to "form[] a seal proximate the mating edge of the post 40," "thereby providing a physical barrier to unwanted ingress of moisture and/or other environmental contaminates." *Id.* at 10:61–67, 11:9–13.

Conductive member 80 functions to extend the grounding shield provided by shield 14 of coaxial cable 10 across the body of connector 100 in the following fashion. First, connector body 50 makes physical and

electrical contact with shield 14 of coaxial cable 10. *See* Ex. 1001, 14:52–64. Second, conductive member 80 is "positioned in a location so as to . . . effectuate electrical contact between the connector body 50 and coupling member 30," to ensure an effective electrical path therebetween. *Id.* at 6:26–31, 11:47–66, 12:3–14. Conductive member 80 additionally functions to provide "a physical seal" between connector body 50 and coupling member 30, "thereby providing a physical barrier to unwanted ingress of moisture and/or other environmental contaminates." *Id.* at 6:19–31, 11:66–12:3.

The embodiment of Figure 1A includes conductive member 70 and conductive member 80. *See* Ex. 1001, Fig. 1A. In one alternative embodiment, conductive member 70 may be used without conductive member 80. *See id.* at Figs. 7A, 7B, 9:62–11:42. In another alternative embodiment, conductive member 80 may be used without conductive member 70. *See id.* at Figs. 8A, 8B, 11:43–12:27.

Patent Owner refers to the '983 patent's disclosure relating to conductive member 70 as the "'coupler-post-port' embodiment" because member 70 is disposed between and electrically connects coupling member 30, post 40, and port 20, to extend the grounding shield through those components. *See* Prelim. Resp. 15–18. Patent Owner refers to the '983 patent's disclosure relating to conductive member 80 as the "'coupler-body' embodiment" because member 80 is disposed between and electrically connects coupling member 30 and connector body 50, to extend the grounding shield through those components. *See, e.g.*, *id.* at 18–20.

F. Illustrative Claims

Claims 1 and 9, the independent claims challenged in this proceeding, are illustrative of the claimed subject matter and are reproduced below with Petitioner's bracketing added for reference (*see* Pet. 90–91 (Claims App.)):

> 1. A connector comprising:
>
> [a] a body portion having a central bore and a first grounding member contact surface;
>
> [b] a post portion disposed within the central bore and having [b][i] an outwardly projecting flange at one end configured to produce a first portion of a mating interface, [b][ii] the post portion having tubular sleeve at the other end configured to mechanically and electrically engage the prepared end of a coaxial cable;
>
> [c] a conductive coupling portion having [c][i] an engagement surface at a first end configured to mechanically and electrically engage an interface port, [c][ii] a lip at a second end configured to produce a second portion of the mating interface, the first and second portions sliding along the mating interface to rotate about an elongate axis of the cable connector, and [c][iii] a second grounding member contact surface opposing the first grounding member contact surface; and
>
> [d] a conductive grounding portion comprising a compliant ring disposed between the first and second grounding member contact surfaces, the conductive grounding portion configured to produce an electrical path between the body portion and the conductive coupling portion.
>
> 9. A connector for coupling a prepared end of a coaxial cable to an interface port, the connector comprising:
>
> [a] a body portion having a central bore and a first grounding member contact surface;
>
> [b] a post portion disposed within the central bore and configured to mechanically and electrically engage the prepared end of the coaxial cable;

> [c] a conductive coupling portion having an engagement surface at a first end configured to mechanically and electrically engage an interface port, and a second grounding member contact surface opposing the first grounding member contact surface; and
>
> [d] a conductive grounding portion configured to produce an electrical path between the body portion and the conductive coupling portion when the engagement surface of the coupling portion loosens relative to the interface port.

Ex. 1001, 15:54–16:10, 16:40–56.

G. Level of Ordinary Skill in the Art

Petitioner, supported by Dr. Dickens' testimony, proposes that a person of ordinary skill in the art at the time of the invention would have had "a bachelor's degree in mechanical or electrical engineering, or a related field, and three to four years of industry experience, or a master's degree in mechanical or electrical engineering, or a related filed, and one to two years of industry experience." Pet. 9. Petitioner asserts that a person of ordinary skill in the art "also would have been familiar with coaxial cables and connectors and/or the components and underlying technology used therein." *Id.* (citing Ex. 1005 ¶¶ 9–13).

Although Patent Owner did not express a position on the level of ordinary skill in the art in the Preliminary Response, *see generally* Prelim. Resp., Dr. Eldering opines that a person of ordinary skill in the art would have "at least a bachelor's degree in engineering and several years of experience in the cable and telecommunications industry relating to the design, manufacture, or utilization of coaxial cable connectors in communications systems." Ex. 2001 ¶ 27. Dr. Eldering further opines that "[b]achelor's degrees in engineering require basic coursework in physics and

mechanics, and experience in the cable and telecommunications industry will result in use of the knowledge obtained in those courses as applied to particular engineering problems which occur with coaxial cable connectors." *Id.* Dr. Eldering also states that "[a]lthough [his] definition of a [person of ordinary skill in the art] differs slightly from that offered by Dr. Dickens, adoption of [Dr. Dickens'] definition would not change any of the analysis or opinions offered" by Dr. Eldering. *Id.* ¶ 29.

In the Institution Decision, we found that the differences in the levels of ordinary skill in the art proposed by Drs. Dickens and Eldering are insubstantial and do not impact the analysis of the issues presented at that time. Inst. Dec. 9. Patent Owner agrees with our finding. PO Resp. 15. Petitioner does not address this issue in its post-institution briefing. *See generally* Pet. Reply.

Based on the complete record before us, we find (as we did in the Institution Decision) that both witnesses' proposals are consistent with the level of ordinary skill in the art reflected by the '983 patent and the prior art of record. *See* Inst. Dec. 8–9. Therefore, we adopt and apply both proposals in this Decision. *See id.* at 9.

II. CLAIM CONSTRUCTION

In this *inter partes* review, claims are construed using the same claim construction standard that would be used to construe the claims in a civil action under 35 U.S.C. § 282(b). *See* 37 C.F.R. § 42.100(b) (2020). The claim construction standard includes construing claims in accordance with the ordinary and customary meaning of such claims as understood by one of ordinary skill in the art at the time of the invention. *See id.*; *Phillips v. AWH Corp.*, 415 F.3d 1303, 1312–14 (Fed. Cir. 2005) (en banc). In construing

claims in accordance with their ordinary and customary meaning, we take into account the specification and prosecution history. *Phillips*, 415 F.3d at 1315–17.

Additionally, only terms that are in controversy need to be construed, and these need be construed only to the extent necessary to resolve the controversy. *See Realtime Data, LLC v. Iancu*, 912 F.3d 1368, 1375 (Fed. Cir. 2019) ("The Board is required to construe 'only those terms . . . that are in controversy, and only to the extent necessary to resolve the controversy.'") (quoting *Vivid Techs., Inc. v. Am. Sci. & Eng'g, Inc.*, 200 F.3d 795, 803 (Fed. Cir. 1999)).

Petitioner contends that "[t]he challenged claims are unpatentable under any reasonable construction, including their plain meaning. Solely for purposes of this proceeding, [Petitioner] adopts the plain meaning and submits that no claim term requires construction." Pet. 9–10 (citing Ex. 1005 ¶ 28). Patent Owner did not express a position on claim construction in its Preliminary Response. *See generally* Prelim. Resp. And, in our Institution Decision, we determined that we need not construe any claim terms expressly because none were in dispute. Inst. Dec. 10 (citing *Vivid Techs.*, 200 F.3d at 803).

The record as to claim construction has not changed since institution, in that neither party proposes constructions for any specific claim terms. *See generally* PO Resp.; Pet. Reply; PO Sur-reply. Accordingly, based on our review of the complete record, we maintain and reaffirm that no explicit construction of any claim term is needed to resolve the issues presented by the parties and resolved in this Decision. *See Realtime Data*, 912 F.3d at 1375.

III. ANALYSIS

A. Legal Standards – Obviousness

The U.S. Supreme Court set forth the framework for applying the statutory language of 35 U.S.C. § 103 in *Graham v. John Deere Co. of Kansas City*, 383 U.S. 1, 17–18 (1966):

> Under § 103, the scope and content of the prior art are to be determined; differences between the prior art and the claims at issue are to be ascertained; and the level of ordinary skill in the pertinent art resolved. Against this background, the obviousness or nonobviousness of the subject matter is determined. Such secondary considerations as commercial success, long felt but unsolved needs, failure of others, etc., might be utilized to give light to the circumstances surrounding the origin of the subject matter sought to be patented.

The Supreme Court explained in *KSR International Co. v. Teleflex Inc.* that

> [o]ften, it will be necessary for a court to look to interrelated teachings of multiple patents; the effects of demands known to the design community or present in the marketplace; and the background knowledge possessed by a person having ordinary skill in the art, all in order to determine whether there was an apparent reason to combine the known elements in the fashion claimed by the patent at issue. To facilitate review, this analysis should be made explicit.

550 U.S. 398, 418 (2007) (citing *In re Kahn*, 441 F.3d 977, 988 (Fed. Cir. 2006) ("[R]ejections on obviousness grounds cannot be sustained by mere conclusory statements; instead, there must be some articulated reasoning with some rational underpinning to support the legal conclusion of obviousness." (alteration in original))).

"Whether an ordinarily skilled artisan would have been motivated to modify the teachings of a reference is a question of fact." *WBIP, LLC v. Kohler Co.*, 829 F.3d 1317, 1327 (Fed. Cir. 2016) (citations omitted).

"[W]here a party argues a skilled artisan would have been motivated to combine references, it must show the artisan 'would have had a reasonable expectation of success from doing so.'" *Arctic Cat Inc. v. Bombardier Recreational Prods. Inc.*, 876 F.3d 1350, 1360–61 (Fed. Cir. 2017) (quoting *In re Cyclobenzaprine Hydrochloride Extended-Release Capsule Patent Litig.*, 676 F.3d 1063, 1068–69 (Fed. Cir. 2012)).

B. Obviousness over Youtsey, Lionetto, and Horak

Petitioner asserts the combination of Youtsey, Lionetto, and Horak would have rendered the subject matter of claims 1–5, 8–15, and 18 obvious to one of ordinary skill in the art at the time of the invention. Pet. 15–19 (discussing motivation to combine), 23–56 (discussing the application of the art to the claims). Patent Owner opposes. *See generally* PO Resp.; PO Sur-reply.

1. Level of Ordinary Skill in the Art

The level of ordinary skill in the art at the time of the invention is discussed above. *See supra* § I.G.

2. Scope and Content of the Prior Art

a. Youtsey

Youtsey discloses a coaxial cable end connector. *See* Ex. 1007, code (54). Figure 3 is reproduced below.

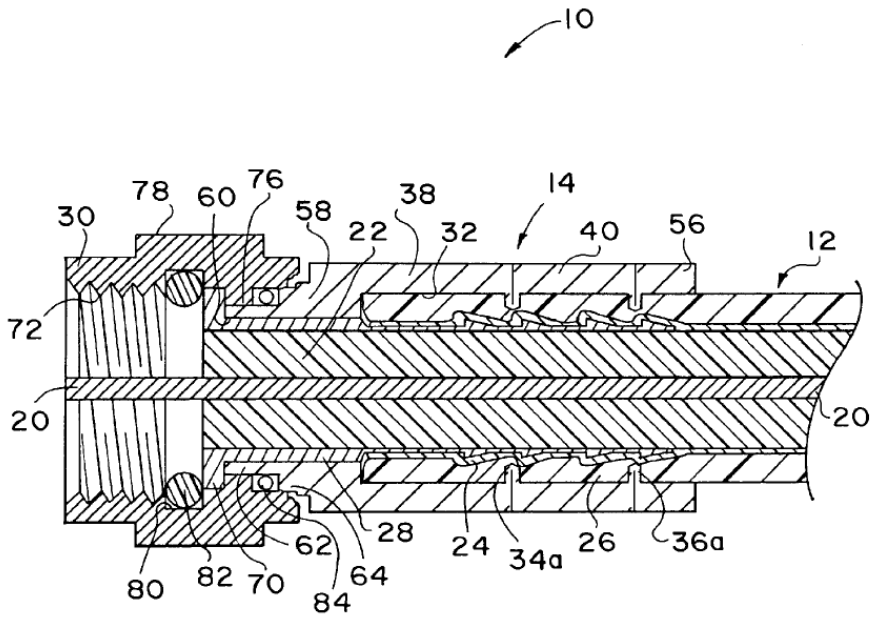

FIG. 3

Figure 3 is a cross-sectional view of coaxial cable connector 10 crimped onto the end of coaxial cable 12. *See id.* at 2:33–35, 2:49–52.

Coaxial cable 12 "is of a type commonly used in the cable television industry," and includes: central conductor 20; inner insulation layer 22; outer conductor 24; and outer insulation layer 26. Ex. 1007, 2:63–67. Connector 10 includes: outer barrel 14; inner tube 28; female receptacle 30; and first and second o-rings 82 and 84. *See id.* at 3:1–2, 5:45–49.

Coaxial cable 12 is inserted into connector 10 via an open end of outer barrel 14, shown at the right in Figure 3. *See* Ex. 1007, 5:57–58. As part of this insertion process, inner tube 28 of connector 10 is sandwiched between outer conductor 24 and inner insulation layer 22 of coaxial cable 12. *See id.* at Fig. 3, 5:58–61. Then, outer barrel 14 is crimped onto outer insulation later 26 of coaxial cable 12, "to thereby fixedly grip the outer conductor 24 and the outer insulation 26 between the outer barrel 14 and the inner tube 28, thus fixing the connector 10 to the coaxial cable 12." *Id.* at 5:65–6:5.

Due to the receipt of inner tube 28 between outer conductor 24 and inner insulation layer 22 of coaxial cable 12, "the outer conductor [24] is electrically connected to the female receptacle 30 via the inner tube 28." Ex. 1007, Fig. 3, 5:61–65, 6:19–21. In turn, female receptacle 30 has internal threads 72 to engage external threads on another coaxial cable connector 16 and its associated coaxial cable 18, as shown in Figure 1. *See id.* at 2:49–60, 5:23–25. In this way, "once the connectors 10 and 16 are matingly engaged, the outer conductors of the cables 12 and 18 will be in conductive contact with one another" to be "grounded." *Id.* at 6:8–14.

First and second o-rings 82 and 84 both seal the interior of connector 10, including the end of coaxial cable 12 retained therein, from intrusion by moisture and other corrosive agents in the environment. *See* Ex. 1007, 1:54–56, 2:14–16, 5:50–53.

b. Lionetto

Lionetto discloses a microminiature coaxial connector assembly. *See* Ex. 1008, code (57). Figure 1 is reproduced below.

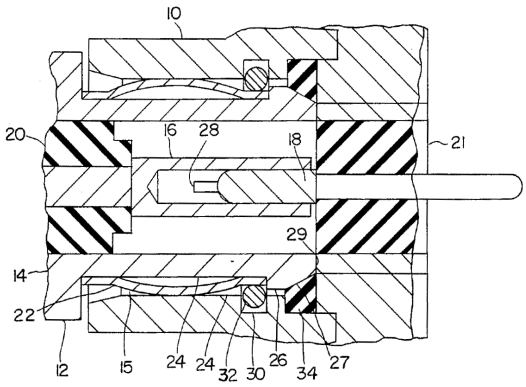

FIG.1

Figure 1 is a schematic diagrammatic partially section view of a coaxial cable assembly, including "an outer shield comprising a male half [10] and a female half [12]." *See id.* at 1:10–16, 1:64–65, 2:1–5. Patent Owner

provides a helpful modified view of Figure 1, in which the two halves 10 and 12 of the outer shield are separated from each other, as reproduced below.

Lionetto FIG. 1	Lionetto FIG. 1 Separating outer male member 10 from inner female member 12
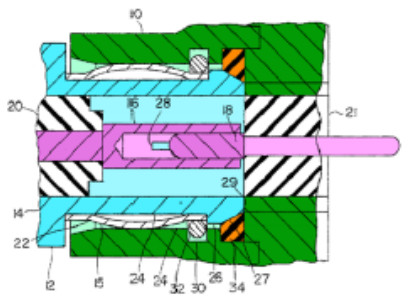	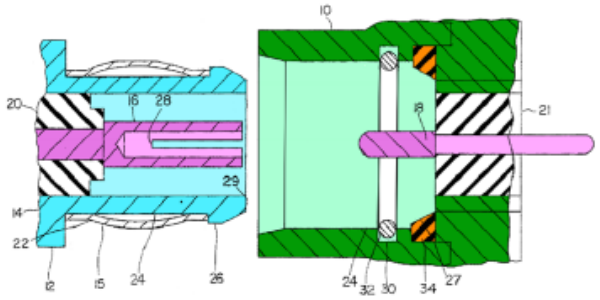

PO Resp. 57. Patent Owner's modified view of Figure 1 shows male shield conductor 10 (colored green by Patent Owner) is associated with inner coaxial conductor 18 (colored pink by Patent Owner) and insulator 21, and female shield conductor 12 (colored blue by Patent Owner) is associated with inner coaxial conductor 16 (colored pink by Patent Owner) and insulator 20. *See id.*; Ex. 1008, 2:1–9. Inner conductor 16 has longitudinal slots 28, which permit axial misalignment between inner coaxial conductors 16 and 18. *See* Ex. 1008, 2:17–20, 2:44–48 (Fig. 2). Male shield conductor 10 receives snap ring 32 within groove 30, which engages collar 26 of female shield conductor 12 to hold it against removal. *See id.* at 1:47–56, 2:20–30.

Electrical contact between the two shield conductors 10 and 12 "is essentially through the leaf spring 22 [carried in groove 24 of female shield conductor 12] and a conductive elastomer 34." Ex. 1008, 1:23–26, 2:9–12, 2:31–36. "[T]he electrical contact between the two [shield conductors 10

and 12] is primarily through the spring contact [22]" when they are "coaxially aligned." *Id.* at 1:33–37. Then, the conductive nature of elastomer gasket ring 34 helps to compensate for misalignment between shield conductors 10 and 12. *See id.* at 1:37–46, 2:37–44 (Fig. 2), 3:14–19 (claim 3). In this way, the coaxial connector assembly "provid[es] continuous circumferential electrical contact and RFI suppression." *Id.* at 3:19–20, code (57).

c. Horak

Horak discloses a cable connector for use with a coaxial cable in CATV systems. *See* Ex. 1009, 1:5–12. Figure 2 is reproduced below.

FIG. 2

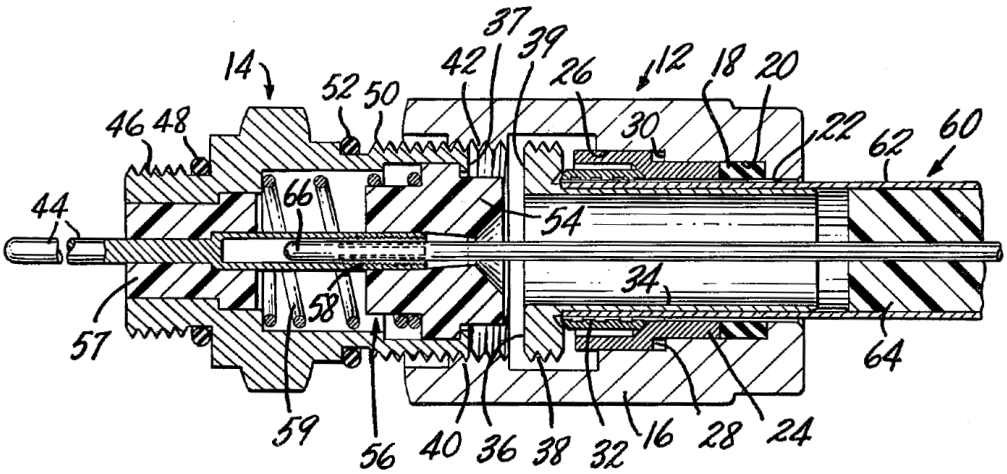

Figure 2 is a sectional view of cable connector 10, comprising nut section 12 and pin section 14, in which the connector is "partially tightened onto a cable 60 inserted through the opening 22 into the nut section 12." *See id.* at 2:35–36, 2:41–44, 4:1–3. Coaxial cable 60 is composed of outer conductive jacket 62, dielectric 64, and internal conductor 66. *See id.* at 3:26–31. Nut section 12 includes body 16 made of a conductive metal such as aluminum, rubber ring 18, cylindrical mandril 24, ferrule 32, and

support sleeve 34 made of a tough material such as steel. *See id.* at 2:44–3:20. Pin section 14 is made of a conductive metal such as aluminum. *See id.* at 3:37–39.

Figure 3 is reproduced below.

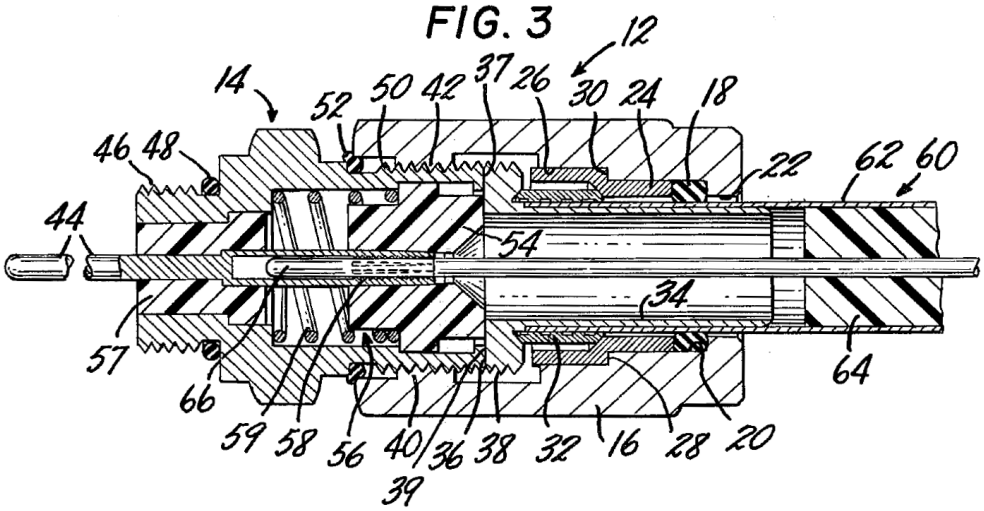

Figure 3 is a sectional view of cable connector 10, when fully tightened and attached to cable 60. *See* Ex. 1009, 2:37–38, 4:20–22. As shown in comparison to Figure 2, the full tightening of nut member 12 onto pin section 14 via threads 42, 50 "causes the ring 18 to be compressed longitudinally," which "forces the ring 18 to expand inward radially thereby providing a weather-proof seal with the conductive jacket 62 of the cable 60." *Id.* at 3:21–25, 3:46–48, 4:20–42. Full tightening also causes flat face 39 of support sleeve 34 to contact flat face 37 of pin section 14, "to provide a metal-to-metal seal." *Id.* at 4:54–59.

Horak's connector seeks to address "the dominant consideration of long-term radio frequency interference (RFI) effectiveness in" coaxial cable connections, in which "alternate tension and compression as well as rotational and vibrational forces . . . combined with temperature variations, air pollutants, and varying humidity conditions" can "serve to gradually

deteriorate the contact" and therefore the "shielding effectiveness" over the course of time. Ex. 1009, 1:13–31. Thus, "[i]n order to prevent the introduction of RFI in a signal carried by the cable 60, it is necessary to insure that the signal-carrying central conductor 66 of the cable 60 is always surrounded by a continuous metal shield," which "is provided by the outer conductive jacket 62." *Id.* at 4:60–66. Connector 10 eliminates RFI introduction to central conductor 66 "by the metal-to-metal seal between the faces 37, 39 of the pin section 14 and the support sleeve 34," and additionally "by using a conductive rubber for the ring 18." *Id.* at 4:67–5:4. "Thus, when the ring 18 is compressed onto the outer jacket 62 of the cable 60 to provide weather sealing, RFI is eliminated at the same time." *Id.* at 5:4–7.

3. Claim 1

Petitioner sets forth a detailed analysis showing how the combined teachings of the references meet the limitations of claim 1. Pet. 23–38. In particular, Petitioner relies upon Youtsey as teaching most of the elements of the claims (*see, e.g.*, *id.* at 15 ("Youtsey's connector with conductive, compressible o-rings is materially the same as the claimed embodiment of the '983 patent and discloses every claim element as arranged in the challenged claims." (citing Pet. 23–56; Ex. 1005 ¶¶ 55–56))), but recognizes that "Youtsey does not expressly disclose that its o-rings are conductive and compressible" (*id.* at 15). Relying on Lionetto and Horak, Petitioner contends that it would have been obvious to use conductive and compressible o-rings "to not only seal against moisture but also maintain a ground shield across the connector, even when the connector is not properly

tightened onto the port and/or movement of the cable causes the ground path between the post and the nut to break." *Id.* at 16.

Patent Owner opposes several aspects of Petitioner's analysis. We consider the various disputed issues concerning the claims, focusing first on claim 1 and then turning to the other challenged claims.

a. Preamble

The preamble of claim 1 recites "[a] connector comprising." Ex. 1001, 15:54. Without taking a position on whether the preamble of claim 1 is limiting, Petitioner contends that "Youtsey discloses a connector 10 (highlighted) that electrically couples coaxial cable 12 to interface port 16." Pet. 23. Petitioner provides the following annotated versions of Youtsey's Figures 1 and 3:

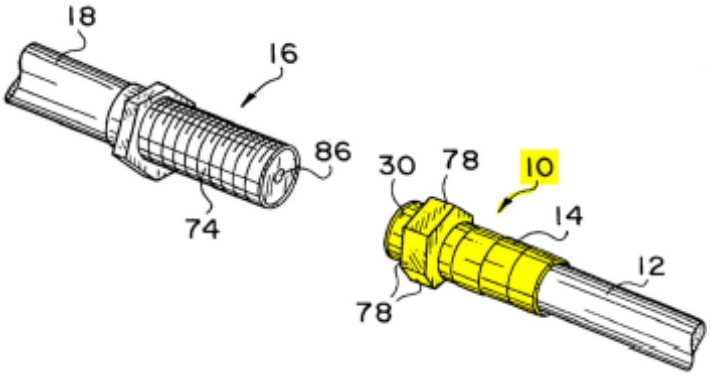

FIG. 1

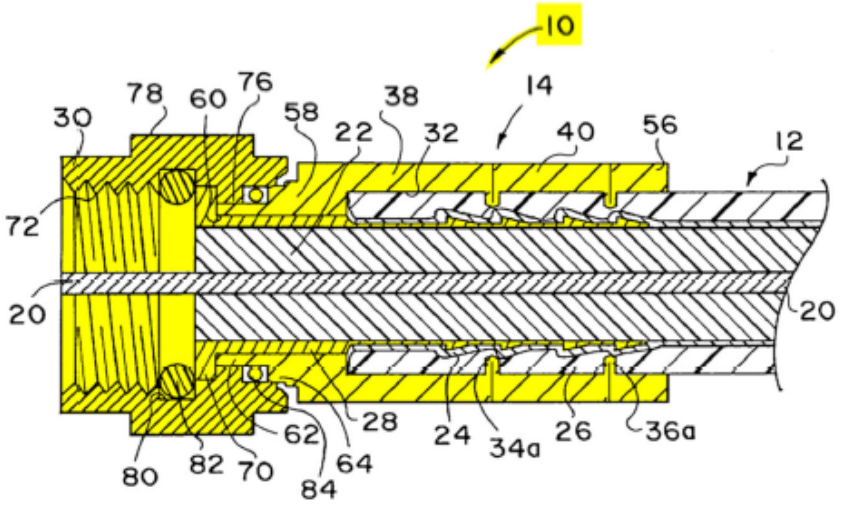

FIG. 3

Id. at 23–24 (citing Ex. 1007, Figs. 1, 3, 1:6–7, 2:49–52, 2:61–67, 6:5–14; Ex. 1005 ¶¶ 67–70). Petitioner's annotated versions of Figure 1 ("an environmental view of a female coaxial cable connector using [an] axially compressible outer barrel") and Figure 3 ("a cross sectional view of a female coaxial cable connector using the axially compressible outer barrel . . . after axial compression") color connector 10 yellow. *Id.*; Ex. 1007, 2:27–29, 2:33–35.

Patent Owner does not challenge Petitioner's analysis and evidence directed to the preamble of claim 1. *See generally* PO Resp.

We find Petitioner's arguments persuasive as to the preamble of claim 1 and supported sufficiently on the complete record before us, and, therefore, we adopt them as our own findings. Accordingly, for the reasons explained by Petitioner, we find that Youtsey teaches the preamble of claim 1.[8]

---

[8] We need not determine whether the preamble of claim 1 is limiting because we find, on the present record, that Petitioner has shown it is taught by Youtsey.

b. Element 1[a]

Element 1[a] recites "a body portion having a central bore and a first grounding member contact surface." Ex. 1001, 15:55–56. Petitioner contends that "Youtsey's connector includes a body portion ('outer barrel 14,' red)," as shown in Petitioner's annotated version of Youtsey's Figure 3 reproduced below. Pet. 24.

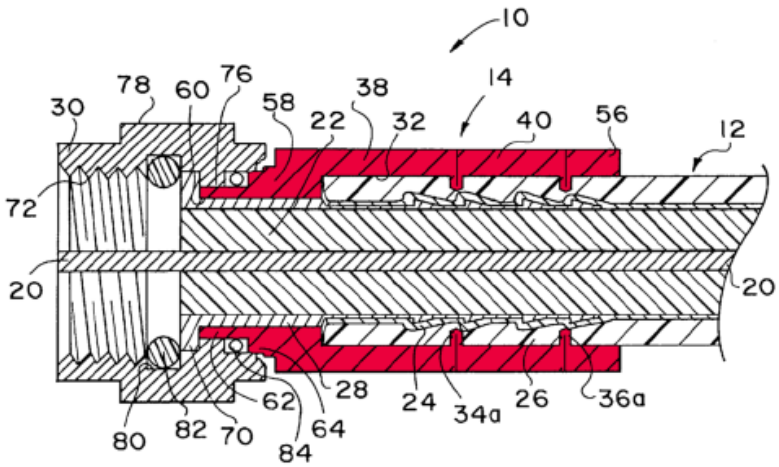

Id. at 25 (citing Ex. 1007, Fig. 3; Ex. 1005 ¶¶ 71–73).[9] Petitioner's annotated version of Youtsey's Figure 3 colors outer barrel 14 red. Additionally, Petitioner contends that Youtsey's outer barrel 14 (body portion) "has a central bore." *Id.* at 26 (citing Ex. 1007, Figs. 2, 3, 3:2–7 ("The outer barrel 14 has a bore 32 . . . such that the outer barrel 14 is roughly in the shape of a tubular shell."); Ex. 1005 ¶ 74).

Further, Petitioner asserts that, after modifying Youtsey in light of Lionetto and Horak to "use[] conductive, compressible grounding o-rings, to

[9] We have omitted Petitioner's citations to Exhibit 1004, the file history for *Inter Partes* Reexamination No. 95/001,689 of U.S. Patent No. 7,833,053, here and elsewhere in this Decision because, as discussed below, we do not rely on collateral estoppel arising from that reexamination as a basis for this Decision. *See infra* § III.B.3.f.

both seal off moisture and maintain a ground shield across the connector," Youtsey's body portion would include "a first grounding member contact surface (dark red)—i.e., the surface of the body portion that contacts an inner surface of grounding o-ring 84 (orange)," as shown in Petitioner's annotated and magnified version of Youtsey's Figure 3 reproduced below. Pet. 26.

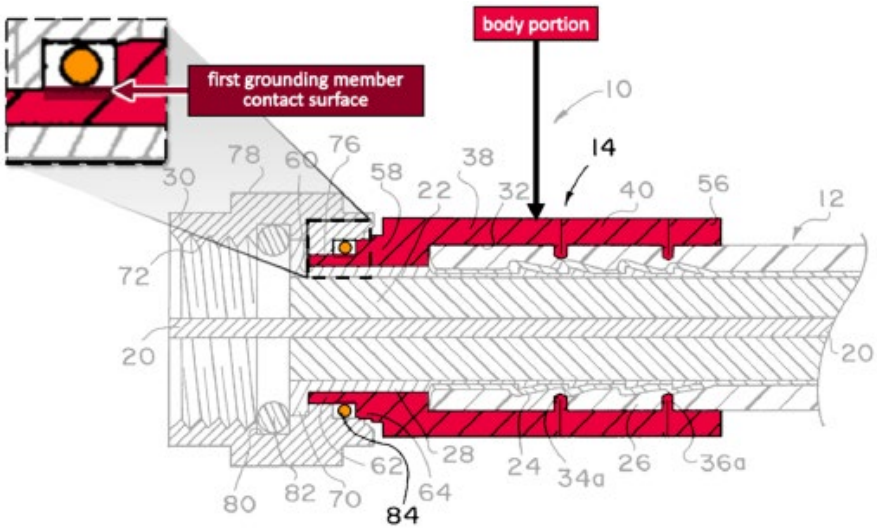

Id. (citing Ex. 1007, Fig. 3, 5:46–53; Ex. 1005 ¶ 75) (also referring to Petition §§ IV.D (motivation to combine), IV.F.5 (element 1[d] (grounding portion))). Petitioner's annotated version of Youtsey's Figure 3 identifies a "body portion" (outer barrel 14, colored red); colors o-ring 84 orange; and includes a magnified view of a portion of the figure identifying a "first grounding member contact surface" of outer barrel 14 (colored red) and coloring o-ring 84 orange. *Id.*

Patent Owner does not challenge Petitioner's analysis and evidence directed to element 1[a]. *See generally* PO Resp. We recognize, however, that Patent Owner's arguments directed to nonobviousness (including motivation to combine) are relevant to element 1[a] because, as reflected above, Petitioner relies on modifying Youtsey to show a conductive

grounding portion, which results in Youtsey's body portion having a "first grounding member contact surface." *See* Pet. 26–27. As explained in detail in our discussion of element 1[d], where we address the parties' arguments, *inter alia*, as to motivation to combine, we find Petitioner's evidence and argument establishes that the combination of Youtsey, Lionetto, and Horak teaches element 1[a] for the reasons provided by Petitioner.

c. Elements 1[b], 1[b][i], and 1[b][ii]

Elements 1[b], 1[b][i], and 1[b][ii], recite "a post portion disposed within the central bore and having an outwardly projecting flange at one end configured to produce a first portion of a mating interface, the post portion having tubular sleeve at the other end configured to mechanically and electrically engage the prepared end of a coaxial cable." Ex. 1001, 15:57–62. Petitioner asserts that "Youtsey's connector 10 includes a post portion ('inner tube 28,' yellow)," which "is disposed within the central bore of the body portion ('outer barrel 14,' red)," as shown in Petitioner's annotated version of Youtsey's Figure 3 reproduced below. Pet. 27 (citing Ex. 1007, Figs. 1, 5, 3:1–2, 4:62–64).

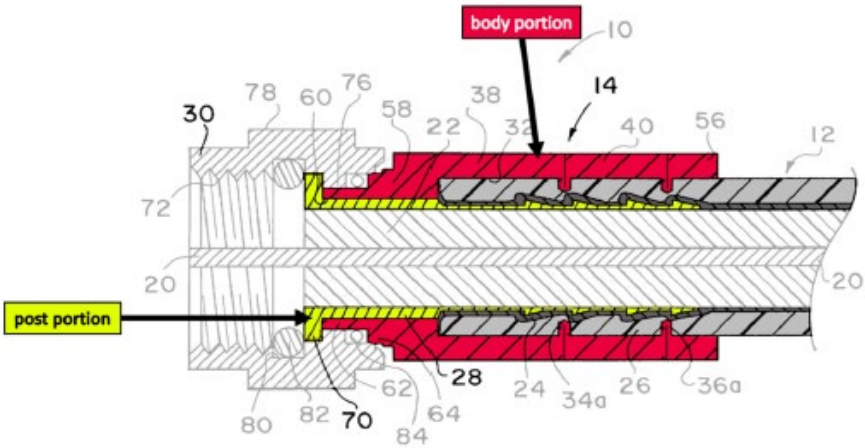

Id. at 27–28 (citing Ex. 1007, Fig. 3, 4:62–64; Ex. 1005 ¶¶ 76–78). Petitioner's annotated version of Youtsey's Figure 3 identifies a "body

portion" (outer barrel 14, colored red) and a "post portion" (inner tube 28, colored yellow), and colors outer conductor 24 dark grey and outer insulation layer 26 grey. *Id.* at 27.

Additionally, Petitioner contends that Youtsey's post portion "has an outwardly projecting flange 70 at one end (left end in Figure 1; 'outlet end 68' in Figure 2)," which "produces a first portion (dark yellow) of a mating interface," as shown in Petitioner's annotated and magnified version of Youtsey's Figure 3 reproduced below. Pet. 28 (citing Ex. 1007, Fig. 2, 5:19–20).

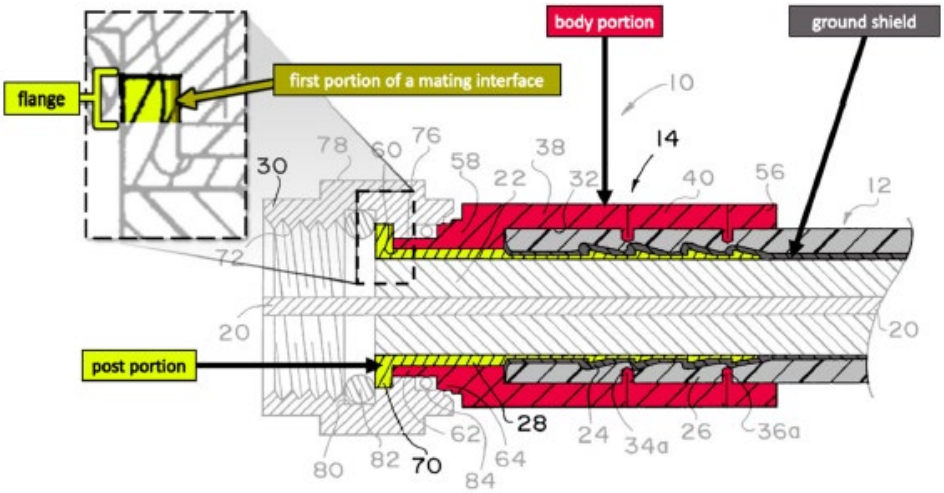

Id. (citing Ex. 1007, 5:25–35[10]; Ex. 1005 ¶¶ 79–81). Petitioner's annotated version of Youtsey's Figure 3 identifies a "body portion" (outer barrel 14, colored red), a "post portion" (inner tube 28, colored yellow), and a "ground shield" (outer conductor 24, colored dark grey); colors outer insulation layer 26 grey; and includes a magnified view of a portion of the figure

[10] In a parenthetical, Petitioner contends that, in Youtsey, "flange 70 of the post portion mates with flange 76 of female receptacle 30." Pet. 28 (citing Ex. 1007, 5:25–35).

identifying flange 70 of inner tube 28 as a "flange" and "first portion of a mating interface" (also colored yellow). *Id.*

Further, Petitioner asserts that Youtsey's "post portion ('inner tube 28,' yellow) has a tubular sleeve at the other end (right end in Figure 3; 'inlet end 66' in Figure 2) that mechanically and electrically engages a prepared end of the coaxial cable 12," as shown in Petitioner's annotated version of Youtsey's Figure 3 reproduced below. Pet. 29 (citing Ex. 1007, Fig. 3; Ex. 1005 ¶¶ 82–83).

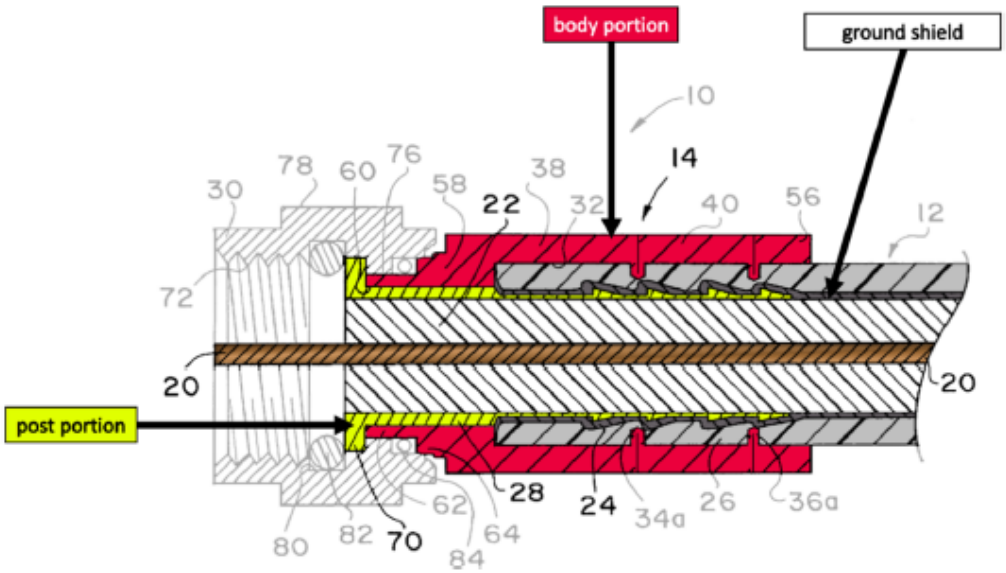

Id. Petitioner's annotated version of Youtsey's Figure 3 identifies a "body portion" (outer barrel 14, colored red), a "post portion" (inner tube 28, colored yellow), and a "ground shield" (outer conductor 24, colored dark grey); and colors outer insulation layer 26 grey. *Id.* Petitioner contends that the other end (right end in Figure 3) of Youtsey's post portion shown in yellow (i.e., inner tube 28) has "serrated edges 92 that protrude into the ground shield layer 'to allow the connector 10 to better grip the cable 12.'" *Id.* at 30 (citing Ex. 1007, Figs. 3, 5, 6:15–22). Petitioner asserts that "[w]hen the prepared end of the coaxial cable 12 is inserted into the body

portion ('outer barrel 14,' red) of the connector 10, the tubular sleeve wedges between the dielectric ('inner insulation layer 22,' white) and ground shield ('outer conductor 24,' dark grey) layers of the cable." *Id.* (citing Ex. 1007, Fig. 3, 5:57–61; Ex. 1005 ¶¶ 86–87). Petitioner contends that "[t]he tubular sleeve electrically engages the ground shield layer ('outer conductor 24,' dark grey) of the prepared end of the cable to extend the ground shield across the connector 10." *Id.* at 30–31 (citing Ex. 1007, 5:63–65, 6:19–20).

Relying on Youtsey's Figure 1, which is reproduced above in our discussion of the preamble of claim 1, Petitioner contends that "[w]hen connector 10 engages the interface port, center conductor 20 of cable 12 'is inserted into the hole 86 to contact the central conductor of cable 18,' and the outer conductors of cables 12 and 18 are 'in conductive contact with one another.'" Pet. 31 (quoting Ex. 1007, 6:5–12). Petitioner asserts that because "'[t]he outer conductors are usually grounded while the center conductor carr[ies] the cable signal,'" the "tubular sleeve end of the post portion electrically engages the prepared end of cable 12 to extend the ground shield through connector 10, to the interface port." *Id.* (citing Ex. 1007, 6:12–14, 6:5–12; Ex. 1005 ¶¶ 90–91).

Patent Owner does not challenge Petitioner's analysis and evidence directed to elements 1[b], 1[b][i], and 1[b][ii]. *See generally* PO Resp.

We find Petitioner's evidence and argument sufficient to establish that Youtsey teaches elements 1[b], 1[b][i], and 1[b][ii] of claim 1 for the reasons provided by Petitioner, as set forth above.

d. Elements 1[c], 1[c][i], 1[c][ii], and 1[c][iii]

Elements 1[c], 1[c][i], 1[c][ii], and 1[c][iii] recite

> a conductive coupling portion having an engagement surface at a first end configured to mechanically and electrically engage an interface port, a lip at a second end configured to produce a second portion of the mating interface, the first and second portions sliding along the mating interface to rotate about an elongate axis of the cable connector, and a second grounding member contact surface opposing the first grounding member contact surface.

Ex. 1001, 15:63–16:4. Petitioner contends that Youtsey discloses element 1[c] because "connector 10 includes a conductive coupling portion ('female receptacle 30,' green)[, as reflected in Petitioner's annotated version of Youtsey's Figure 3 reproduced below,] that couples to the interface port ('male connector 16,' shown in Figure 1)." Pet. 32.

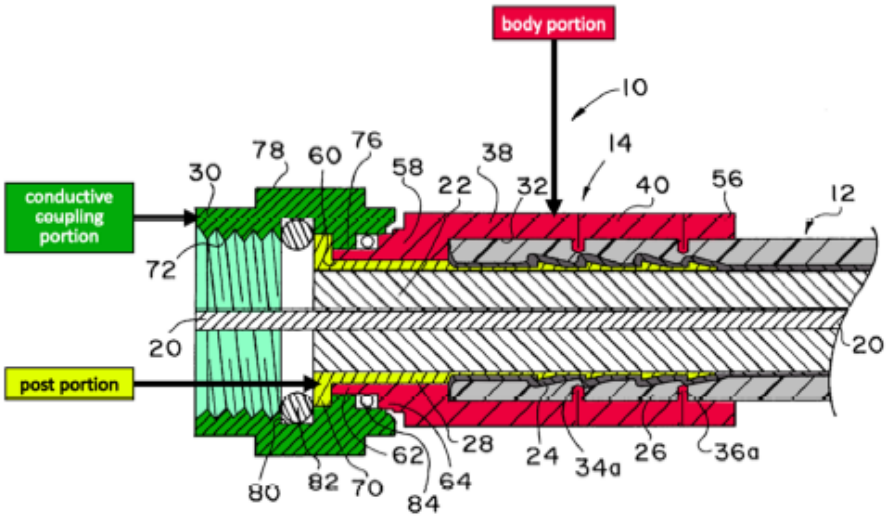

Id. at 33 (citing Ex. 1007, Fig. 3, 5:61–65, 6:5–6, 6:8–14; Ex. 1005 ¶¶ 92–94). Petitioner's annotated version of Youtsey's Figure 3 identifies a "body portion" (outer barrel 14, colored red), a "post portion" (inner tube 28, colored yellow), and a "conductive coupling portion" (female receptacle 30,

colored green); and colors outer conductor 24 dark grey and outer insulation layer 26 grey. *Id.* at 32–33.

Additionally, Petitioner asserts that Youtsey discloses element 1[c][i] because "Youtsey's coupling portion ('female receptacle 30') includes an engagement surface ('internal threads 72,' light green) at a first end (left end)[, as shown in Petitioner's annotated version of Youtsey's Figure 3 reproduced below,] configured to mechanically and electrically engage an interface port ('male connector 16')," shown in Youtsey's Figure 1. Pet. 33.

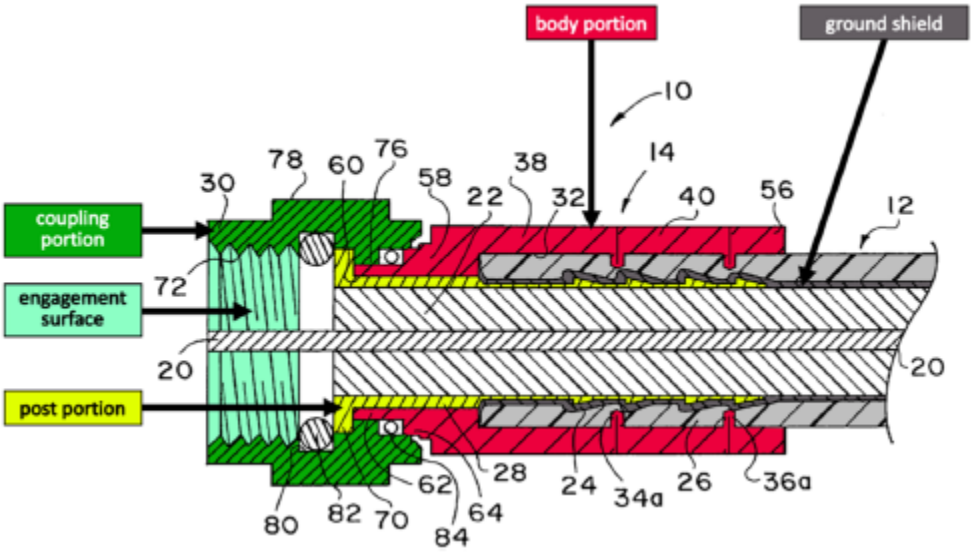

Id. at 34 (citing Ex. 1007, Fig. 3, 5:23–25, 5:61–65, 6:5–14; Ex. 1005 ¶¶ 95–96). Petitioner's annotated version of Youtsey's Figure 3 identifies a "body portion" (outer barrel 14, colored red), a "post portion" (inner tube 28, colored yellow), a "coupling portion" (female receptacle 30, colored green), an "engagement surface" (internal threads 72, colored light green), and a "ground shield" (outer conductor 24, colored dark grey); and colors outer insulation layer 26 grey. *Id.*

Petitioner contends that Youtsey discloses element [1][c][ii] because "Youtsey's coupling portion ('female receptacle 30') includes a lip

('flange 76') configured to provide a second portion of the mating interface (dark green)," as shown below in Petitioner's annotated and magnified version of Youtsey's Figure 3. Pet. 34.

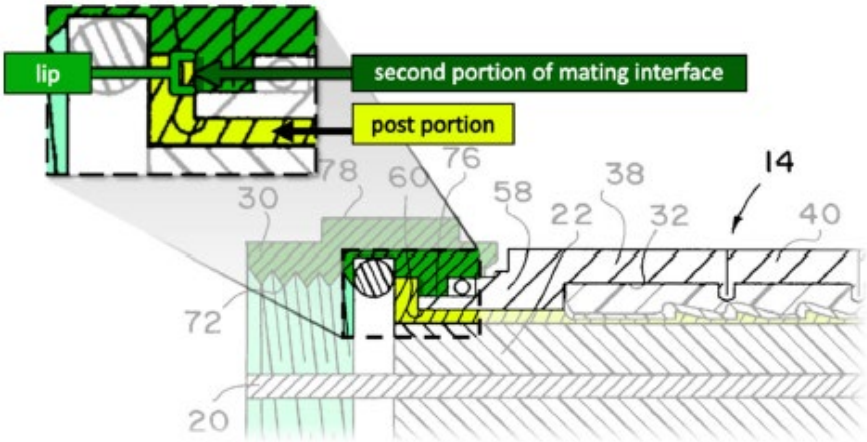

Id. at 35 (citing Ex. 1007, Fig. 3, 5:25–29, 5:29–35; Ex. 1005 ¶¶ 97–98). Petitioner's annotated version of Youtsey's Figure 3 shows a portion of Figure 3 in which inner tube 28 is yellow and female receptacle 30 is green, and also includes a magnified view of a portion of the figure identifying a "post portion" (inner tube 28, colored yellow), and a "lip" (part of female receptacle 30, colored green, and also identified as a "second portion of mating interface"). *Id.* Petitioner asserts that "[t]he first and second portions of the mating interface—i.e., the contacting portions of the post portion's flange 70 and the coupling portion's flange 76, respectively—slide along the mating interface to rotate about an elongate axis ('longitudinal axis') of the cable connector 10." *Id.* (citing Ex. 1007, 3:2–7, 5:29–35, 5:35–37; Ex. 1005 ¶ 99).

Regarding element 1[c][iii], Petitioner asserts that, after modifying Youtsey in light of Lionetto and Horak, "[t]he coupling portion (green) includes a second grounding member contact surface (dark green)—i.e., the surface of female receptacle 30 that contacts an outer surface of grounding

o-ring 84—opposing the first grounding member contact surface (dark red) of the body portion (red)," as shown in Petitioner's annotated and magnified version of Youtsey's Figure 3 reproduced below. Pet. 35–36.

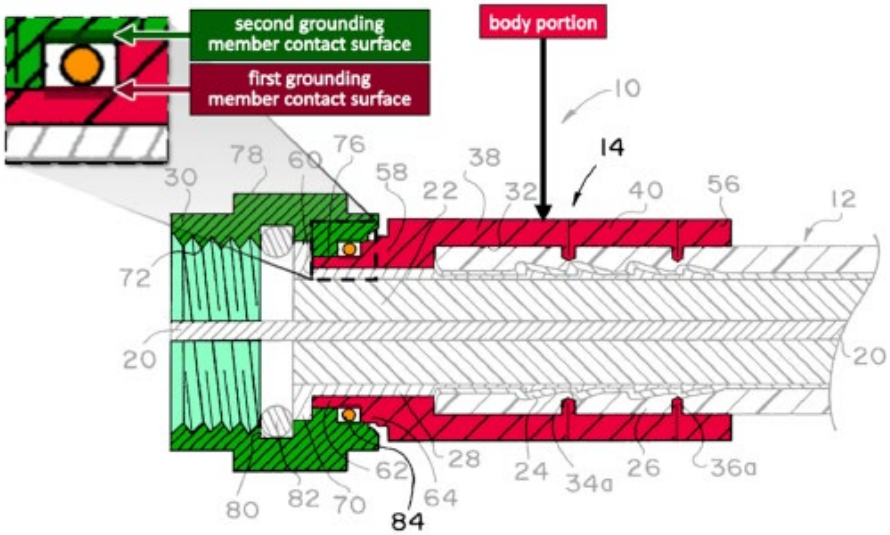

Id. at 36 (citing Ex. 1007, Fig. 3, 5:46–53; Ex. 1005 ¶¶ 100–101) (also referring to Petition § IV.D (motivation to combine)). Petitioner's annotated version of Youtsey's Figure 3 identifies a "body portion" (outer barrel 14, colored red); colors female receptacle 30 green, internal threads 72 light green, and o-ring 84 orange; and also includes a magnified view of a portion of the figure identifying a "first grounding member contact surface" (of outer barrel 14) and a "second grounding member contact surface" (of female receptacle 30). *Id.*

Patent Owner does not challenge Petitioner's analysis and evidence directed to elements 1[c], 1[c][i], 1[c][ii], and 1[c][iii]. *See generally* PO Resp. We recognize, however, that Patent Owner's arguments directed to nonobviousness (including motivation to combine) are relevant to element 1[c][iii] because, as reflected above, Petitioner relies on modifying Youtsey to show a conductive grounding portion, which results in Youtsey's

coupling portion having a "second grounding member contact surface . . . opposing the first grounding member contact surface." *See* Pet. 35–36. As explained in detail in our discussion of element 1[d], where we address the parties' arguments, *inter alia*, as to motivation to combine, we find Petitioner's evidence and argument establish that Youtsey teaches elements 1[c], 1[c][i], and 1[c][ii], and the combination of Youtsey, Lionetto, and Horak teaches element 1[c][iii] for the reasons provided by Petitioner.

e. Element 1[d]

Element 1[d] recites "a conductive grounding portion comprising a compliant ring disposed between the first and second grounding member contact surfaces, the conductive grounding portion configured to produce an electrical path between the body portion and the conductive coupling portion." Ex. 1001, 16:5–10. Element 1[d] is the focus of the parties' dispute, and there are several factual and legal issues presented for our resolution. First, we summarize Petitioner's contentions (subsection i). Then, we discuss the scope and content of the prior art as it relates to claim 1, and particularly element 1[d] (subsections ii and iii). Next, we address whether one of ordinary skill in the art would have been motivated to modify Youtsey in light of Lionetto and Horak (subsection iv). Then, we consider whether one of ordinary skill in the art would have had a reasonable expectation of success (subsection v). Next, we address Patent Owner's reliance on objective indicia of nonobviousness (subsection vi). Lastly, we weigh all of the arguments and evidence to reach a conclusion as to whether the subject matter of claim 1 would have been obvious to one of ordinary skill in the art at the time of the invention (subsection vii).

i. Summary of Petitioner's Contentions

Petitioner asserts a person of ordinary skill in the art would have been motivated to modify Youtsey in light of Lionetto and Horak, to make Youtsey's o-rings 82[11] and 84 *conductive* and *compressible*. *See* Pet. 15–19, 36–38. Petitioner asserts that, after modifying Youtsey in light of Lionetto and Horak, "[t]he connector includes a conductive grounding portion ('o-ring 84,' orange) comprising a compliant ring (conductive elastomeric sealing o-ring) between the first and second grounding member contact surfaces," as shown in Petitioner's annotated and magnified version of Youtsey's Figure 3 reproduced below. *Id.* at 36–37.

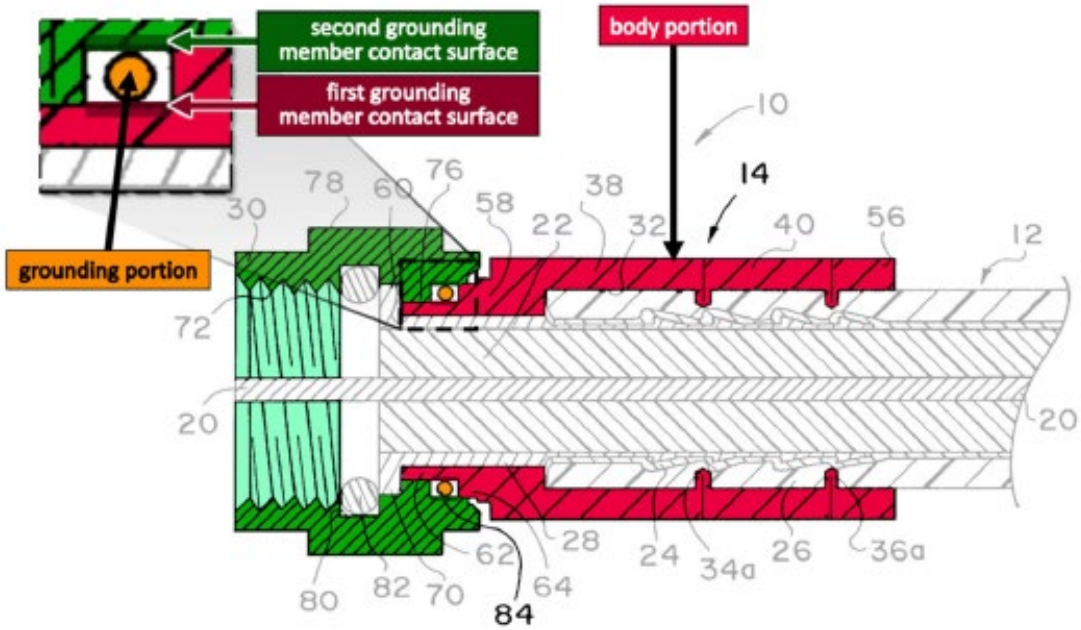

Id. at 37 (citing Ex. 1007, Fig. 3; Ex. 1005 ¶¶ 102–103) (also referring to Petition §§ IV.D (motivation to combine), IV.F.2 (element 1[a])).

[11] As reflected in this Decision, the disputes between the parties and the entirety of Patent Owner's arguments in opposition to Petitioner's challenges are focused on o-ring 84 as opposed to o-ring 82. Therefore, our discussion and analysis in this Decision also are focused on o-ring 84.

Petitioner's annotated version of Youtsey's Figure 3 identifies a "body portion" (outer barrel 14, colored red); colors female receptacle 30 green, internal threads 72 light green, and o-ring 84 orange; and also includes a magnified view of a portion of the figure identifying a "grounding portion" (o-ring 84), a "first grounding member contact surface" (of outer barrel 14), and a "second grounding member contact surface" (of female receptacle 30). *Id.* Petitioner contends that "[t]he conductive grounding portion provides an electrical path between the body portion and the conductive coupling portion," and that one of ordinary skill in the art "would have made o-ring 84 (orange) a conductive, compressible grounding member . . . to provide an electrical ground path between the body portion ('outer barrel 14,' red) and the conductive coupling portion ('female receptacle 30,' green)." *Id.* at 37–38 (citing Ex. 1005 ¶ 104) (also referring to Petition § IV.D (motivation to combine)).

Referring to its element-by-element analysis detailed above, Petitioner contends that, "[a]s reflected in the figures below, Youtsey's connector with conductive, compressible o-rings is materially the same as the claimed embodiment of the '983 patent and discloses every claim element as arranged in the challenged claims." Pet. 15 (citing Ex. 1005 ¶¶ 55–56) (also referring to Petition §§ IV.F.1–5). Petitioner provides the following annotated versions of Figure 3 of Youtsey and Figure 1B of the '983 patent, illustrating their similarities:

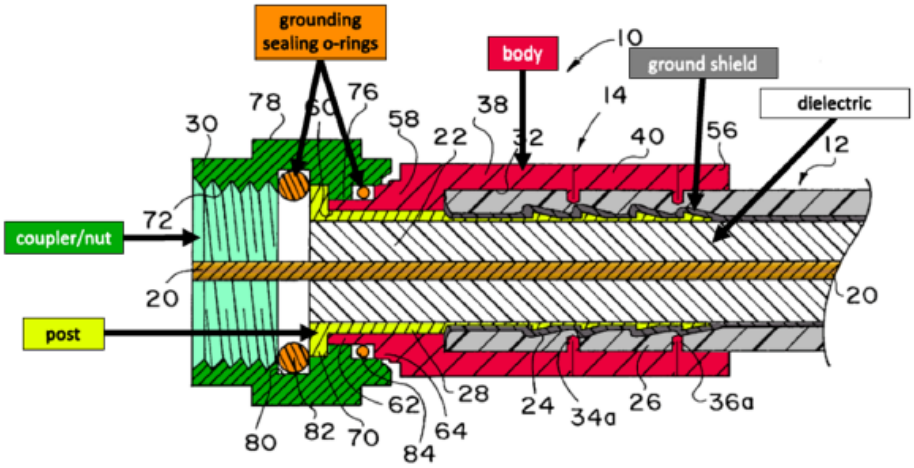

Youtsey, Fig. 3.

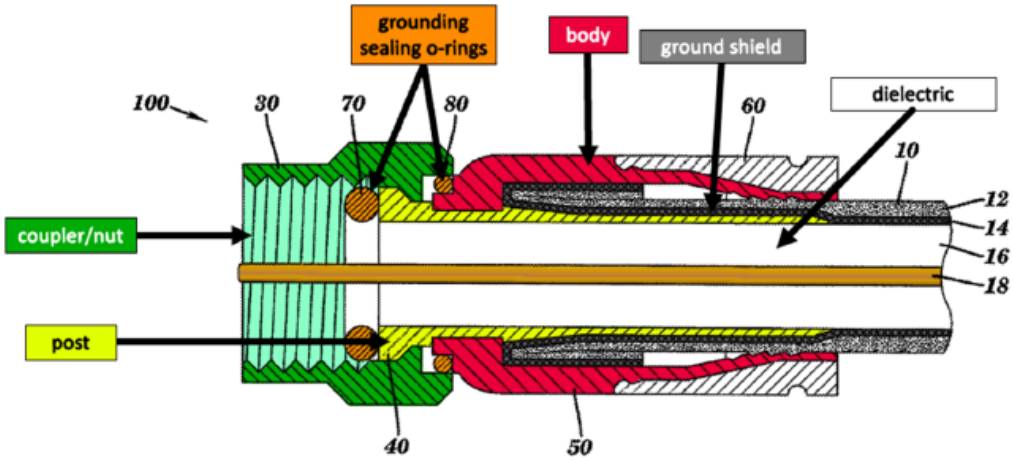

'983 patent, Fig. 1B.

Id. Petitioner's annotated versions of Figure 3 of Youtsey and Figure 1B of the '983 patent identify, in each figure, a "post" (yellow), a "coupler/nut" (light green), "grounding sealing o-rings" (orange), "body" (red), "ground shield" (dark grey), and "dielectric" (white). *Id.*

Petitioner asserts "Youtsey does not expressly disclose that its o-rings are conductive and compressible," but "it would have been obvious to use such o-rings" in Youtsey for two reasons. Pet. 16. The first reason is because the modification would "not only seal against moisture but also

maintain a ground shield across the connector, even when the connector is not properly tightened onto the port and/or movement of the cable causes the ground path between the post and the nut to break," as demonstrated by Lionetto and Horak. *Id.* The second reason is because a person of ordinary skill in the art "would have understood that Youtsey's o-rings are located in areas susceptible to RFI," which would be better shielded by making o-ring 84 conductive, also as demonstrated by Lionetto and Horak. *Id.* at 17–18. Petitioner further contends a person of ordinary skill in the art "would have had a reasonable expectation of success in implementing Youtsey with conductive, compressible o-rings." *Id.* at 18–19.

ii. Differences Between Claim 1 and Youtsey, Lionetto, and Horak

(a) Coupler-Body Electrical Grounding Path

As discussed above in Sections III.B.3.b and III.B.3.d, it is undisputed that Youtsey's o-ring 84 is *located in the position* required by claim 1—that is, Youtsey's o-ring 84 is disposed between and contacts a body portion (i.e., outer barrel 14) and a coupling portion (i.e., female receptable 30).

As part of its argument as to why one of ordinary skill in the art would have modified Youtsey's o-ring 84 to be conductive and compressible, Petitioner asserts "Lionetto discloses a sealing o-ring [(conductive elastomer 34)] between *the outer body* [(male conductor 10)] and inner post [(internal sleeve 14)] of a coaxial cable connector" that "is conductive and compressible." Pet. 16 (emphasis added) (citing Ex. 1008, Fig. 1, 1:23–26, 2:1–5, 3:14–20); Ex. 1005 ¶ 58.

Patent Owner contests Petitioner's characterization of Lionetto, asserting that "the prior art fails to teach or suggest the coupler-body

grounding member and coupler-body grounding path limitations of the Challenged Claims." PO Resp. 8; *see also id.* at 6–7 (arguing the '983 patent's conductive member 80 provides "***a new coupler-body grounding path***" from grounding shield 14, to connector body 50, to member 80, to coupling member 30, to interface port 20, which does "***not***" include post 40 as had been known before the '983 patent); Ex. 2001 ¶¶ 69–71, 79–80. Patent Owner asserts Dr. Dickens "admitted that he relied upon the 'nomenclature' of the Challenged Claims themselves, instead of relying upon what the prior art actually teaches, in arriving at his opinion that Lionetto discloses a grounding member contacting the 'body,'" and Dr. Dickens also "admitted that he did not 'have any particular reason for calling' [Lionetto's male conductor 10] a body, and agreed that it could have been labeled a 'coupler,' not a body." PO Resp. 10 (citing Ex. 1005 ¶ 58; Ex. 2041, 145:11–146:9, 147:16–148:3, 152:1–7, 152:17–156:15; Ex. 2001 ¶¶ 90–118).

Patent Owner concludes "Petitioner and its expert mislabeled the components in [Lionetto] as the claimed 'body' to try to make [Lionetto] appear as if [it reads] on the claimed invention ***without even attempting to provide any supporting evidence***." PO Resp. 13. In response to the Institution Decision's statement that the Board need not determine whether Petitioner accurately characterizes various components of Lionetto as corresponding to structural terms in claim 1, Patent Owner asserts that "in light of the record evidence . . . developed during this Trial, in its Final Written Decision, the Board should reject Petitioner's invitation to commit legal error." *Id.* at 14 (citing Inst. Dec. 57, 64). Patent Owner emphasizes that each of the Challenged Claims "requires a conductive grounding

member '***configured to***' produce the claimed grounding path," and argues this language "requires that the structure must be 'designed or configured to accomplish the specified objective, not simply that [it] can be made to serve that purpose.'" *Id.* (alteration in original). In Patent Owner's view, Petitioner must "establish[] that *the prior art actually discloses or suggests* a coupler-body grounding member that is designed or configured to provide the claimed coupler-body ground path," which Petitioner has failed to do. *Id.* at 14–15 (emphasis added) (citing Ex. 1005 ¶ 58; Ex. 2041, 147:16–149:18).

Petitioner replies that Patent Owner "draws up a strawman, questioning the Petition's illustrations of" Lionetto as to the "body portion" limitation. Pet. Reply 4. Petitioner asserts "the Board correctly found [in the Institution Decision] that it need not decide this issue because the importance of Lionetto . . . lies in [its] disclosure of a sealing, conductive o-ring that provides protection from both weather and RFI." *Id.* (citing Inst. Dec. 58).

We find Youtsey's o-ring 84 is, as recited in claim 1, a ring disposed between respective surfaces of a body portion (i.e., outer barrel 14) and a coupling portion (i.e., female receptacle 30). *See* Ex. 1007, Fig. 3; *supra* Sections III.B.3.b and III.B.3.d. However, Youtsey's o-ring 84 is not a *conductive grounding* portion comprising a *compliant* ring *configured to produce an electrical path between* Youtsey's body portion 14 and coupling portion 30, as further recited in element 1[d].

We find Lionetto discloses a conductive grounding portion comprising a compliant ring (i.e., conductive elastomer 34) disposed between respective surfaces of male conductor 10 and female conductor 12,

and configured to produce an electrical path between those two conductors. *See* Ex. 1008, Fig. 1, 2:1–5, 2:31–36, 3:14–20.

We find Horak discloses a conductive grounding portion comprising a compliant ring (i.e., rubber ring 18) disposed between respective surfaces of conductive body 16 and conductive jacket 62, and configured to produce an electrical path between those two conductors. *See* Ex. 1009, Figs. 2–3, 2:41–56, 3:28–31, 4:67–5:11.

We do not decide whether Lionetto's male conductor 10 or Horak's conductive body 16 is a "body portion" as that term is used in claim 1, despite Petitioner's contention and Dr. Dickens's testimony that they are. *See* Pet. 16; Ex. 1005 ¶¶ 46, 50, 58–59. This is because it is undisputed that Youtsey's outer barrel 14 is such a body portion, as we find above. Thus, we need not and do not rely on Lionetto's male conductor 10 or Horak's conductive body 16 as corresponding to the claimed "body portion" because this element of the claim already is met by Youtsey. Our consideration of the issues presented here is based on the findings concerning the disclosures of Lionetto and Horak as set forth above, without analogizing Lionetto's male conductor 10 or Horak's conductive body 16 to the claimed "body portion" or to Youtsey's outer barrel 14.

(b) O-Ring

It is undisputed that Youtsey's o-ring 84 is a "ring" as that term is used in claim 1.

As part of asserting why one of ordinary skill in the art would have modified Youtsey's o-ring 84 to be conductive and compressible, Petitioner asserts "Lionetto discloses a sealing *o-ring*" as conductive elastomer 34, and "Horak discloses a conductive, compressible sealing *o-ring*" as rubber

ring 18. Pet. 16 (emphases added) (citing Ex. 1008, Fig. 1, 1:23–26, 2:1–5, 3:14–20; Ex. 1009, 2:41–56, 3:11–20, 4:67–5:11; Ex. 1005 ¶¶ 57–59).

Patent Owner responds that neither Lionetto's conductive elastomer 34 nor Horak's rubber ring 18 is an "o-ring" like Youtsey's o-ring 84. *See* PO Resp. 56–59; Ex. 2042 ¶¶ 252–259. Patent Owner argues an o-ring is a ring formed by material having a circular cross-section. *See* PO Resp. 58–59 (citing Ex. 2036 § 3.1.1); Ex. 2042 ¶¶ 252, 256. By contrast, Lionetto's conductive elastomer 34 and Horak's rubber ring 18 both have flat sides in cross-section. *See* PO Resp. 56–59 (citing Ex. 1008, Fig. 1; Ex. 1009, Fig. 3, 3:42–47, 4:47–49; Ex. 2041, 217:2–220:4, 221:16–222:6, 240:21–244:3, 250:13–252:12); Ex. 2042 ¶¶ 252–259.

We need not and do not decide whether Lionetto's conductive elastomer 34 or Horak's conductive rubber ring 18 are "o-rings" because it is undisputed that Youtsey's o-ring 84 is a ring, as recited in claim 1, and because Petitioner relies on Youtsey's o-ring 84 as teaching the recited o-ring. *See* Pet. 37 (referring to "o-ring 84" and stating that one of ordinary skill in the art "would have made o-ring 84 . . . a conductive, compressible grounding member"). Thus, even though Petitioner pointed to what it refers to as an "o-ring" in each reference, we do not rely on Lionetto's conductive elastomer 34 or Horak's conductive rubber ring 18 as corresponding to an "o-ring" structure. Our consideration of the obviousness issues presented here is based on our findings that Lionetto's conductive elastomer 34 and Horak's conductive rubber ring 18 are both ring-shaped compliant conductive grounding members disposed between and contacting two conductors, and configured to produce an electrical path between those two

conductors. *See* Ex. 1008, Fig. 1, 2:1–5, 2:31–36, 3:14–20; Ex. 1009, Fig. 2, 2:41–56, 3:28–31, 4:67–5:11.

We find Youtsey's o-ring 84 is an o-ring located in the position required by claim 1—that is, o-ring 84 is disposed between and contacts a body portion and a coupling portion. We also find Lionetto and Horak each disclose a ring-shaped compliant conductive grounding member disposed between and contacting two conductors in a coaxial cable connector, to produce an electrical path between the two conductors.

iii. Scope of Prior Art—Grounding Paths in Coaxial Cable Connectors

Patent Owner asserts a person of ordinary skill in the art, prior to the '983 patent's invention, would have understood that the *post* and <u>not</u> the *body* of a coaxial cable connector is used to extend the grounding shield through the connector. *See* PO Resp. 15–18. Patent Owner summarizes several references that it asserts support this view: Youtsey (Ex. 1007), Tarrant (Ex. 1010), Campbell (Ex. 1013), Youtsey '631 (Ex. 2021), Palinkas (Ex. 2022), and Bence (Ex. 2023). *See id.* at 15–22 (citing Ex. 1005 ¶¶ 20, 88, 198; Ex. 2041, 41:15–42:6, 45:8–17, 173:22–176:8, 266:5–10); Ex. 2001 ¶¶ 38–45, 48, 50–63, 87–89. Patent Owner concludes the grounding portion of claim 1, "which is configured to (*i.e.*, designed to) ***contact the body, not the post***, was a significant departure from the prior art." PO Resp. 15–16. Patent Owner also asserts, due to this alleged state of the art, that Petitioner's case for obviousness is "without support" and is based on "speculation . . . contrary to what the prior art teaches." *Id.* at 18.

Petitioner argues Patent Owner's foregoing argument is belied by positions taken by Patent Owner in *Corning Optical Communications RF,*

LLC v. PPC Broadband, Inc., IPR2013-00340, and Dr. Eldering's testimony in that proceeding. *See* Pet. Reply 6–7. Petitioner asserts Patent Owner there described Tatsuzuki (Ex. 1029) as "addressing the loose connector problem with a conductive member that—in Dr. Eldering's own words—'provide[s] continuity between the nut and the ***body***, <u>not</u> between the nut and the post.'" *Id.* at 6 (quoting Ex. 1034, 7 (alteration and emphases in original)) (citing Ex. 1029, Figs. 3, 5, 6, 7, ¶ 11; Ex. 1033, 68; Ex. 1034, 7–10; Ex. 1035, 4–5; Ex. 1036 ¶¶ 30–43). Petitioner also argues that Bence, contrary to Patent Owner's position, "address[es] a loose connector by utilizing a coupler-body ground." *Id.* at 8 (citing Ex. 2023, 1:47–2:3, 2:27–31); Ex. 1026 ¶¶ 279–281.

Patent Owner replies that Petitioner's reliance on Tatsuzuki and Bence in the Reply exceeds the proper scope for a reply under 37 C.F.R. § 42.23(b). *See* Paper 25, 1–2 (cites #1, #2); PO Sur-reply 3–4. We disagree. As to Tatsuzuki, the Patent Owner Response argues at some length that the post, not the body, is used to extend a grounding shield (*see* PO Resp. 15–22), thereby opening the door for Petitioner to argue Patent Owner took an inconsistent position in IPR2013-00340 in relation to Tatsuzuki. As to Bence, the Patent Owner Response cites Bence in support of its arguments (*see id.* at 21–22), thereby opening the door for Petitioner to argue Bence supports Petitioner's arguments and does not support Patent Owner's arguments. *See, e.g.*, *Rembrandt Diagnostics, LP v. Alere, Inc.*, 76 F.4th 1376, 1384 (Fed. Cir. 2023) (stating that "the need to rely on new evidence in response may not arise until a particular point has been raised in the patent owner response," and "the introduction of new evidence in the course of the trial is to be expected in [IPR] trial proceedings" and

permissible "as long as the opposing party is given notice of the evidence and an opportunity to respond to it" (alteration in original)).

On the merits, Patent Owner asserts its arguments in IPR2013-00340 concerned "a ***different and unrelated patent***" (i.e., U.S. Patent No. 8,323,060) and "a ***different prior art reference***" (i.e., Tatsuzuki) "directed to a ***different type of connector***" than those at issue here. PO Sur-reply 6–7. Specifically, Patent Owner annotates Tatsuzuki's Figure 3 (*see id.* at 7), as reproduced below.

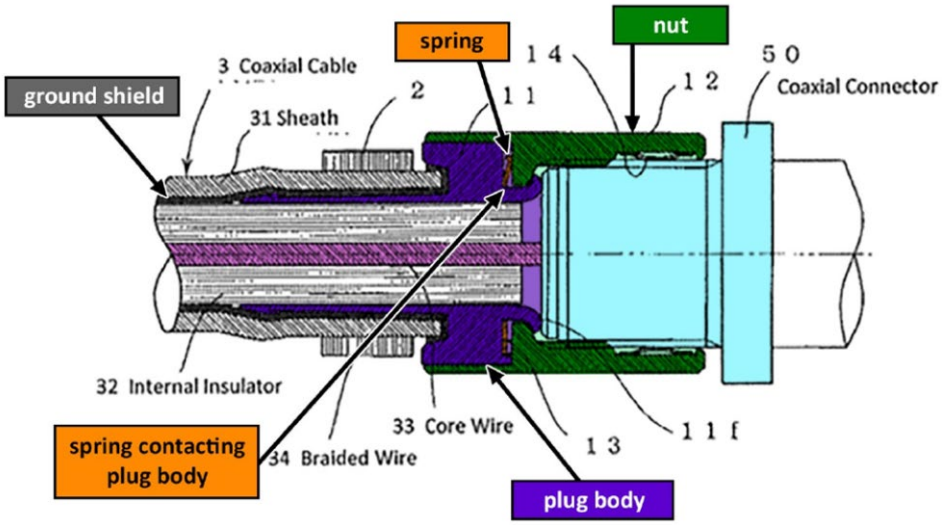

Tatsuzuki's Figure 3 shows coaxial cable 3 including grounding braided wire 34 (dark gray), connected to coaxial connector 50 (light blue) by plug main body 11 (purple) and rotary mounting element 12 (green) with an interposing disc-shaped spring 13 (orange). *See* Ex. 1029 ¶¶ 18–19. According to Patent Owner, Tatsuzuki provides: (1) spring 13 as a grounding member, which is "***not*** a conductive elastomer" and (2) plug body 11, which is "an ***integral*** post/body" in direct contact with Tatsuzuki's cable grounding shield 34, as opposed to Youtsey's "***separate*** post and body components." PO Sur-reply 7–8 (citing Ex. 1029, Fig. 3, ¶¶ 16, 17, 19; Ex. 2044, 359:22–362:8, 368:15–369:6, 370:12–372:14; Ex. 2001 ¶ 55)

(also citing IPR2013-00340, Paper 5 at 5 n.1, 17 and Ex. 1030, Fig. 3). It was only the petitioner in IPR2013-00340 that proposed the obviousness of splitting Tatsuzuki's plug body 11 into a separate post and body, according to Patent Owner, and even with that modification Tatsuzuki's spring 13 still "***contact[ed] both the post and the body***"—not just the body as Petitioner would have it. *Id.* at 8–9 (citing Pet. Reply 7) (also citing IPR2013-00340, Paper 5 at 22, 30 and Paper 91, 14 n.2).

Patent Owner moreover asserts "Bence is ***not even prior art***" because it was filed after the effective filing date of the '983 patent. PO Sur-reply 4 (citing Prelim. Resp. 13 n.3). Further, according to Patent Owner, all of the embodiments in Bence use a grounding member between a coupler and a post. *See id.* at 4–5 (citing Ex. 2023, code (57), Figs. 1–11D, 2:50–67, 5:60–6:21, 8:1–66, 9:12–21, 10:15–25, 10:36–39; Ex. 2044, 391:1–399:2).

We disagree with Patent Owner's contention that the prior art is limited to using a post to extend the grounding shield through a coaxial cable connector. We agree with Patent Owner that some prior art connectors used a post to extend the grounding shield. Critically, however, the prior art *also* discloses using *other* conductive components to provide grounding shield paths through the connector, some of which *do not* pass through a post.

For example, Lionetto discloses two electrical grounding paths through its connector: (1) from male conductor 10, to leaf spring 22, to female conductor 12 and (2) from male conductor 10, to conductive elastomer 34, to female conductor 12. *See* Ex. 1008, Fig. 1, 2:31–36, 2:50–58 (claim 1), 3:14–20 (claim 3). The parties have disputed whether Lionetto's female conductor 12 corresponds to a "post." *See* Pet. 12 (stating "Lionetto's connector includes . . . a post ('female outer

conductor' 12 . . .)"); Prelim. Resp. 42 (stating "Lionetto's inner female member 12 is not a post of a connector"). Regardless, Lionetto demonstrates that different grounding paths may be provided through a coaxial cable connector, using different structures in the connector.

Horak also discloses two electrical grounding paths through its connector: (1) from outer conductive jacket 62, to support sleeve (post) 34, to pin section 14 and (2) from outer conductive jacket 62, to conductive rubber ring 18, to conductive body 16, to pin section 14. *See* Ex. 1009, Figs. 1–2, 3:21, 4:60–5:7. Further, Horak's second path does not go through Horak's post 34. *See id.* at Fig. 2.

Campbell also discloses two electrical grounding paths through a coaxial cable connector. Campbell's Figure 10b is reproduced below.

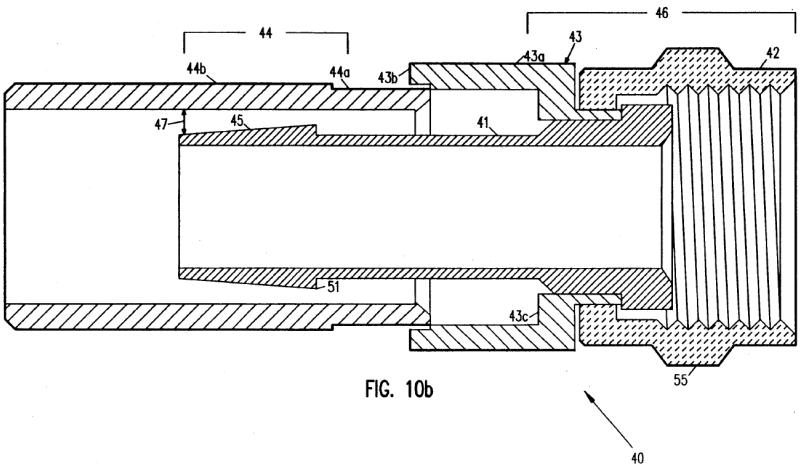

FIG. 10b

Figure 10b is a cross-sectional view of coaxial cable connector 40 in a partially assembled state, including post 41, nut 42, collar 43, and sleeve 44. *See* Ex. 1013, 7:12–14, 7:32–41.

Campbell's Figure 13 is reproduced below.

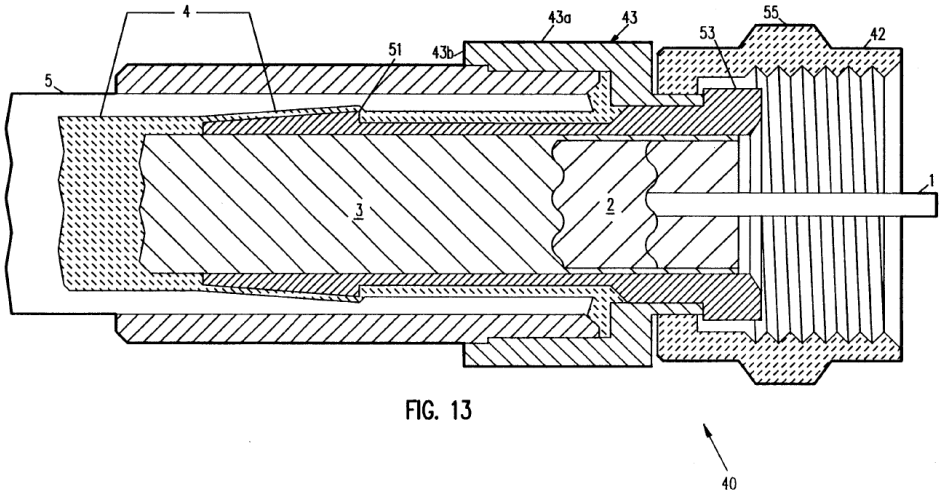

FIG. 13

Figure 13 is a cross-sectional view of connector 40 in an assembled state, on coaxial cable 3 including central conductor 1, dielectric 2, outer conductor 4, and outside insulation layer 5. *See* Ex. 1013, 7:19–21, 10:31–39, 10:65–68.

The two electrical grounding paths through Campbell's connector 40 are: (1) from outer conductor 4 of coaxial cable 3, to post 41, to collar 43 and (2) from outer conductor 4 to collar 43 directly. *See* Ex. 1013, 1:51–60, 5:63–6:11, 7:32–60, 8:5–20, 10:5–18, 10:30–68; *id.* at 10:47–50 ("Forcing sleeve 44 into collar 43 of integral end piece 46 *forces braid outer conductor 4 against inside surface 43c of collar 43, providing a good electrical contact*." (emphasis added)). Further, Campbell's second path does not go through Campbell's post 41. Patent Owner's summary of Campbell discusses the first path, but overlooks the second path. *See* PO Resp. 16.

Bell provides coaxial cable connector 10 with an electrical grounding path extending from conducting braid 64 of cable 60, to outlet body 22, to conductive o-ring 34, to plug body 12. *See* Ex. 1011, Fig. 1, 1:43–51, 2:6–21, 2:52–67, 3:13–18. Patent Owner argues Bell's outlet body is a post.

See PO Resp. 10–13. Regardless, Bell demonstrates using different structures in the connector to provide a grounding shield path.

As to Bence, given the uncertainty in the record as to whether Bence is prior art to the '983 patent, we do not rely on it here. *See, e.g.*, PO Resp. 21–22; Pet. Reply 8 n.6; PO Sur-reply 4.

The remaining prior art references cited by Patent Owner drive home the fact that it was known to use different structures to provide grounding shield path(s) through a coaxial cable connector. *See* PO Resp. 16–17 (describing Youtsey and Tarrant), 20–21 (describing Youtsey '631 and Palinkas). Tatsuzuki, discussed above, is another example of this variability.

Further, Patent Owner does not point to any prior art disclosures that might suggest a post is a critical component of a grounding shield path, or that a post is better than other connector component(s) in this regard, including a body. *See, e.g.*, PO Resp. 15–22. Dr. Eldering similarly discusses how various connectors used a post to create a grounding shield path, but does not opine that the post is critical or more useful than other components in this regard. *See, e.g.*, Ex. 2001 ¶¶ 38–45, 48, 55–63, 87–89. Thus, although some prior art references use a post to maintain a grounding shield path, that fact does not detract from the overall variability of prior art solutions in this regard.

Finally, claim 1 does not exclude using a post to provide a grounding path, so long as the recited grounding portion is part of one or more grounding paths. Indeed, claim 1 specifies that the post "electrically engage[s]" the coaxial cable, although the functional purpose of this electrical engagement is not specified in the claim. Ex. 1001, 15:59–62; *see also id.* at 7:57–62 (one functional purpose of the electrical engagement is to

"facilitat[e] grounding through the post"); 13:17–29 (describing grounding through the post). Thus, Patent Owner's insistence that the claimed invention differs from the prior art by avoiding use of the post to provide a grounding path fails to recognize that claim 1 does not exclude this use of the post.

In short, the evidence demonstrates that, prior to the '983 patent, it was known to one of ordinary skill in the art to use different conductive components to provide grounding shield paths through a coaxial connector, some of which did not pass through a post. Also, claim 1 is broader than Patent Owner would have it, because it does not exclude using a post to provide a grounding shield path.

iv. Motivation to Modify Youtsey in Light of Lionetto and Horak

(a) Petitioner's First Motivation—Maintain Ground Shield in Loose Connector

<u>The Petition</u>

Petitioner's first motivation for modifying Youtsey's o-ring 84 to be conductive and compressible is to "maintain a ground shield across the connector [10], even when the connector is not properly tightened onto the port [16] and/or movement of the cable [12, 18] causes the ground path between the post [28] and the nut [30] to break." Pet. 16; *see also* Ex. 1007, Figs. 1, 3, 2:49–60, 5:17–37 (illustrating and describing these components in Youtsey). Petitioner explains Youtsey's "o-rings 82 and 84 seal the interior of the . . . connector 10 from moisture and other corrosive agents in the ambient environment.'" Pet. 16 (quoting Ex. 1007, 5:45–53). Petitioner contends a person of ordinary skill in the art "would have known that

conductive, compressible o-rings can be used for this purpose," based on Lionetto and Horak. *Id.*

In particular, Petitioner asserts Lionetto discloses a conductive and compressible sealing elastomer 34 between two metal conductors of a coaxial cable connector. Pet. 16 (citing Ex. 1008, Fig. 1, 1:23–26, 2:1–5, 3:14–20; Ex. 1005 ¶ 58). Petitioner asserts Horak similarly discloses a conductive and compressible sealing rubber ring 18 between two metal conductors of a coaxial cable connector. *Id.* (citing Ex. 1009, 2:41–56, 3:11–20, 4:67–5:11; Ex. 1005 ¶ 59). Relying, *inter alia*, on Horak, Petitioner contends a person of ordinary skill in the art "would have understood that maintaining a continuous ground shield across the connector is critical for preventing RF interference and signal loss of the signal traveling on the main conductor of the coaxial cable," thereby motivating use of a conductive elastomer for Youtsey's o-ring 84. *Id.* at 16–17 (citing Ex. 1001, 1:51–67; Ex. 1009, 1:13–15; Ex. 1005 ¶ 60).

<u>Patent Owner's Response</u>

Patent Owner argues that prior art solutions to the loose connector problem placed grounding members in contact with the *post* and <u>not</u> the *body* of the connector, thereby "demonstrat[ing] that a [person of ordinary skill in the art] would have been motivated to (and did) place grounding members in contact with the ***post***, ***not the body***, to maintain a grounding path through a connector." PO Resp. 20 (citing Ex. 2001 ¶¶ 54–62); *see id.* at 18–22.

Patent Owner next asserts "the parties agree" that "RFI could only be a problem, if at all, in any crevices in the Youtsey [connector] if the ***already existing*** grounding shield extending across the connector was broken." PO

Resp. 38 (citing Pet. 16, 61; Ex. 1005 ¶¶ 60, 173; Ex. 2041, 64:17–67:7, 72:19–74:1); Ex. 2042 ¶¶ 231, 234. Patent Owner contends Dr. Dickens "admitted that if the grounding path was maintained" then "there would be no RFI problems." PO Resp. 38, 43–44 (citing Ex. 2041, 66:9–68:11, 69:5–20). Patent Owner concludes Petitioner's motivation falls short because Petitioner has not provided any evidence to show that Youtsey's already-existing ground path between its post 28 and coupling portion 30 had a problem. *Id.* at 38–39, 45–46; Ex. 2042 ¶¶ 287–289.

Indeed, according to Patent Owner, Youtsey already solves the loose connector problem, so "there is no apparent reason to modify" Youtsey's o-ring 84 to be conductive. PO Resp. 41. Patent Owner argues that Youtsey's existing non-conductive o-rings 82 and 84 combine to retain the parts of the connector together and also to prevent moisture infiltration and the resulting corrosion, thereby preventing the connector from loosening. *Id.* at 41–43 (citing Ex. 1005 ¶ 124; Ex. 1007, Fig. 3, 5:52–55; Ex. 2041, 59:15–61:9, 108:4–111:5, 185:1–186:22, 187:1–189:1); Ex. 2042 ¶¶ 218–220, 228–230.

Patent Owner moreover argues Petitioner does not explain persuasively why Youtsey's o-ring 84 would have been made conductive, given that Lionetto and Horak "show that it was known to make 'a sealing o-ring between the outer body and ***inner post*** [*i.e.*, not the coupler] of a coaxial cable connector' conductive." PO Resp. 28–29 (alteration in original) (citing Pet. 16, 61). Patent Owner concludes "the prior art does not provide any evidence that a [person of ordinary skill in the art] would be motivated to make Youtsey's o-ring 84 . . . between the body and the coupler conductive." *Id.* at 29.

For example, Patent Owner argues the desire to maintain a continuous grounding shield across Youtsey's connector is "too generic" to motivate modifying Youtsey's o-ring 84 to be conductive, as the Federal Circuit has instructed that "mere 'knowledge of a problem and motivation to solve it are entirely different from motivation to combine particular references.'" PO Resp. 29–30 (quoting *ActiveVideo Networks, Inc. v. Verizon Commc'ns, Inc.*, 694 F.3d 1312, 1328 (Fed. Cir. 2012)). In particular, according to Patent Owner, Petitioner "simply identifies the problem to be solved (*i.e.*, the need to maintain the grounding path) without any indication or suggestion of how to specifically solve it" using the claimed *coupler-body* grounding path, instead of the *post* grounding path taught by the prior art. *Id.* at 29; *see also id.* at 30–31 (citing Ex. 2021 (Youtsey '631), Ex. 2022 (Palinkas), Ex. 2023 (Bence)); Ex. 2001 ¶¶ 47–48, 54–63, 68; Ex. 2042 ¶¶ 272–274.

Patent Owner further asserts:

> The prior art relied upon by Petitioner also confirms that a [person of ordinary skill in the art] would have been motivated to follow the teachings of the prior art by placing a grounding member in ***direct contact*** with the grounding shield of the cable and/or the ***post*** that is designed to contact and extend the grounding shield of the cable in order to have ***as few possible failure points as possible***.

PO Resp. 31; Ex. 2042 ¶ 274. Patent Owner argues in support that Lionetto's conductive elastomer 34 directly contacts outer shield conductor 10, Horak's conductive rubber ring 18 directly contacts outer conductive jacket 62, and Bell's conductive o-ring 34 directly contacts outlet body 22. PO Resp. 31–33 (citing Ex. 1008, Fig. 1, 2:1–7, 2:31–37; Ex. 1009, Figs. 1, 3, 3:26–36, 4:20–47, 5:2–7; Ex. 1011, Fig. 1, 2:60–62,

3:12–34; Ex. 2041, 224:22–225:20); Ex. 2001 ¶¶ 91–93, 123–129, 146–157; Ex. 2042 ¶¶ 275–278. According to Patent Owner, this desire "to provide a grounding path with ***as few potential failure points as possible***" would have led a person of ordinary skill in the art "to maintain the known ***grounding path*** through the ***post***, instead of creating a new grounding [coupler-body] path with additional potential failure points." PO Resp. 33 (citing Ex. 2041, 214:10–22); Ex. 2042 ¶ 278.

Petitioner's Reply

Petitioner asserts Patent Owner acknowledges "[t]he loose connector problem was well known." Pet. Reply 2, 6 (citing Pet. 15–19; PO Resp. 18–22; Ex. 2001 ¶¶ 52–53). Petitioner reiterates that Youtsey teaches elastomeric o-ring 84 between body member 14 and coupling element 30 to seal out moisture, and Lionetto and Horak "each teach a conductive, compressible elastomeric member that both seals out moisture and shields from RFI." *Id.* at 1–2 (citing Pet. 10–19). Petitioner concludes a person of ordinary skill in the art therefore "would have wanted to prevent RFI and signal loss caused by a loose connector by modifying" Youtsey's o-ring 84 to be conductive. *Id.* at 2.

Petitioner characterizes Patent Owner's opposition as being that "no single prior art reference" discloses or suggests the coupler-body grounding portion of claim 1. Pet. Reply 2. Petitioner responds: "[O]bviousness cannot be rebutted by attacking the references individually rather than their combined teachings." *Id.* at 2–3. According to Petitioner, the evidence establishes that "[a]t the time of the alleged inventions, conductive elastomeric rings were commonly used in cable connectors to avert RFI." *Id.* at 3 (citing Pet. 15–19; Ex. 1005 ¶¶ 55–66). Petitioner asserts this

common usage would have motivated a person of ordinary skill in the art to modify Youtsey's sealing o-ring 84 to be conductive to shield against RFI and signal loss. *Id.* at 3 & n.3 (citing Pet. 15–19, 36–37; Inst. Dec. 64). Petitioner concludes that it is the prior art, not improper hindsight based on the '983 patent, that renders claim 1 obvious. *Id.* at 5 (citing Inst. Dec. 57).

Petitioner moreover asserts Patent Owner errs in contending Youtsey's "non-conductive o-rings 'solve' the loose connector problem by sealing out moisture." Pet. Reply 22. According to Petitioner, "[a] loose connector creates RFI issues, as [Patent Owner] recognizes," and Youtsey's o-rings "do not shield against RFI when the connector is loose." *Id.* (citing Prelim. Resp. 8–11; PO Resp. 15–22; Ex. 2001 ¶¶ 49–54; Ex. 1034, 4; Ex. 1036 ¶¶ 21, 16–20). Petitioner reiterates that it "has [been] known—since at least 1975—that a conductive o-ring can provide weather sealing and block RF interference at the same time," which "aligns with the stated objective of Youtsey . . . to protect against signal degradation." *Id.* at 22–23 (citing Pet. 13–14, 17–19; Ex. 1007, 1:16–22, 2:16–19; Ex. 1009, 4:66–5:11; Ex. 1011, 2:17–21, 3:16–18); Ex. 1005 ¶¶ 55–66.

Petitioner further argues Patent Owner "errs in contending that there is no motivation to combine because RFI would not be a concern when the grounding path in Youtsey . . . is unbroken." Pet. Reply 15. Petitioner contends Youtsey's existing grounding path "can break when the connector is loose," which would have motivated a person of ordinary skill in the art to implement a "*redundant*" grounding path by modifying o-ring 84 to be conductive, "consistent with the prior art's teachings" including Horak. *Id.* (emphasis added) (citing Pet. 15–16; Ex. 1005 ¶¶ 115–117); Ex. 1026 ¶¶ 305–306. "For example, Horak teaches use of a conductive o-ring [18] in

the presence of another internal ground path [37, 39]." Pet. Reply 15 (citing Ex. 1009, 4:59–65, 5:7–11).

Patent Owner's Sur-reply

Patent Owner in reply maintains that Petitioner's motivation is deficient because Youtsey's two o-rings 82 and 84 already solve the loose connector problem by "***retain[ing] the parts of the coaxial cable end connector 10 together*** until the connector 10 is fixed to the end of a coax cable." PO Sur-reply 21 (quoting Ex. 1007, 5:52–55). Patent Owner concludes that "if Youtsey's o-rings keep the connector parts together before cable connection, Petitioner does not explain why they would not also keep them together after cable connection." *Id.* at 22. Patent Owner asserts Dr. Dickens admitted this, despite Petitioner's argument that he did not. *See id.* at 22 (citing Pet. Reply 17 n.12; Ex. 1005 ¶ 124; Ex. 2041, 185:1–186:22).

Patent Owner also argues Petitioner's "redundant" grounding path rationale exceeds the proper scope for a reply under 37 C.F.R. § 42.23(b). *See* Paper 25, 7–8 (cites #6, #7), 18–20 (cites #20–22); PO Sur-reply 27. On the merits in that regard, Patent Owner asserts Petitioner's redundant grounding path rationale is deficient, because the new redundant grounding path in Youtsey (outer conductor 24, to body portion 14, to o-ring 84, to coupling portion 30) would compromise the existing grounding path (outer conductor 24, to post 28, to coupling portion 30). *See* PO Sur-reply 27. Patent Owner also argues Petitioner's redundancy rationale lacks sufficient explanation and evidentiary support. *Id.* (citing Pet. Reply 15). This is because, according to Patent Owner, Youtsey's front o-ring 82 "maintain[s] the grounding path ***even if*** the connector is not fully tightened," and "Horak

fails to teach a redundant ***loose connector*** ground path because the conductive member 18 in Horak is not compressed to form a ground path until the entrance connector is ***already fully tightened***." *Id.*; Ex. 2001 ¶¶ 126–130.

Analysis and Determination as to Petitioner's First Motivation

As an initial matter, we disagree with Patent Owner's position that Petitioner's "redundant" grounding path discussion exceeds the proper scope for a reply. In the Petition, Petitioner asserts a person of ordinary skill in the art would have been motivated to make Youtsey's o-ring 84 conductive to "*maintain* a ground shield across the connector, *even when* [(1)] the connector is not properly tightened and/or [(2)] movement of the cable causes the ground path between the post and the nut to break." Pet. 16 (emphases added); *see id.* at 16–18. This discussion in the Petition clearly is directed to proposing a second (or redundant) grounding path because one could not *maintain* a ground shield (one path) when the other ground shield (between post and nut) breaks unless there were at least two grounding paths.

Patent Owner repeatedly argues, in various fashions in the Patent Owner Response, that the Petition is deficient for failing to explain and support those contentions. *See* PO Resp. 27–64. In Petitioner's Reply, Petitioner further explains that which it originally presented in the Petition—how and why making Youtsey's o-ring 84 conductive would accomplish *maintaining* a grounding path (ground shield) across the connector (i.e., outer conductor 24, to body portion 14, to o-ring 84, to coupling portion 30) *even when* the other ground path already taught by Youtsey (i.e., outer conductor 24, to post 28, to coupling portion 30—between the post and nut)

breaks because of (1) or (2). Accordingly, we find that Petitioner's further explanation in its Reply is not an improper new theory as alleged by Patent Owner, but rather is a permissible further explanation of the argument first expressed in the Petition. *See, e.g.*, *Rembrandt Diagnostics*, 76 F.4th at 1384.

Next, we determine Petitioner's motivation contentions are supported by a preponderance of the evidence. We credit Dr. Dickens's testimony that a person of ordinary skill in the art "would have understood that maintaining a *continuous* ground shield across the connector *is critical* for preventing RFI and signal loss of the signal traveling on the main conductor of the coaxial cable." Ex. 1005 ¶ 60 (emphases added); *see* Pet. 16–17. This design objective also is expressed in the background section of the '983 patent (*see* Ex. 1001, 1:46–60), Youtsey (*see* Ex. 1007, Figs. 1, 3, 5:57–65, 6:8–14), Lionetto (*see* Ex. 1008, code (57), 1:10–20), and Horak (*see* Ex. 1009, 1:13–30, 4:60–66).

Starting with Youtsey, Dr. Dickens testifies Youtsey provides a shielding ground path through connector 10. *See* Ex. 1005 ¶¶ 39–43, 87–91; Pet. 10–12, 29–32. This path consists of outer conductor 24 of coaxial cable 12 contacting post 28, which contacts coupling portion 30, which contacts interface port 16, which contacts the outer conductor of coaxial cable 18. *See* Ex. 1007, Figs. 1, 3, 5:57–65, 6:8–14; Ex. 1005 ¶ 43. This is the sole shielding ground path provided in Youtsey.

Turning to Horak, Dr. Dickens relies on Horak's disclosure that coaxial cable connectors should account for "*the dominant consideration* of long-term radio frequency interference (RFI) effectiveness," because "[t]he mechanics of [Horak's] interface indicate that stress can reduce contact

pressure between" components of the connector, which will "deteriorate shielding effectiveness." Ex. 1009, 1:5–19; *see* Ex. 1005 ¶ 60 (citing Ex. 1009, 1:13–19); Pet. 16–17. Horak further states: "Once secured, this connection is typically subjected to alternate tension and compression as well as rotational and vibrational forces" that "combined with temperature variations, air pollutants, and varying humidity conditions, serve to gradually deteriorate the contact." Ex. 1009, 1:23–31. And: "In order to prevent the introduction of RFI in a signal carried by the cable 60, it is *necessary* to insure that the signal-carrying central conductor 66 of the cable 60 is *always* surrounded by a *continuous* metal shield." *Id.* at 4:60–63 (emphases added).

Dr. Dickens testifies persuasively that, to address this problem, Horak provides two different shielding ground paths in its connector, thus motivating a person of ordinary skill in the art to do the same in Youtsey. *See* Ex. 1009, Figs. 2–3; Ex. 1005 ¶¶ 50–54, 59, 62–64; Pet. 13–14, 16, 17–18. Horak's first path consists of outer conductive jacket 62 of coaxial cable 60 contacting support sleeve 34, which contacts pin section 14 at faces 37 and 39. *See* Ex. 1009, 3:11–15, 3:28–29, 3:37–39, 4:3–6, 4:54–5:2. Horak's second path consists of outer conductive jacket 62 contacting conductive rubber ring 18, which contacts conductive body 16 of nut section 12, which contacts pin section 14 at threads 42 and 50. *See id.* at 2:45–56, 3:21–25, 3:45–47, 4:37–41, 5:2–11.

Dr. Dickens also testifies persuasively that Lionetto, similarly to Horak, provides two different shielding ground paths in its connector, beneficially providing "*continuous* annular outer conductor electrical contact and RFI suppression" to help account for axial misalignment between the

two halves of the connector. Ex. 1008, code (57) (emphasis added), Figs. 1–2, 2:50–58 (claim 1), 3:14–20 (claim 3); *see* Ex. 1005 ¶¶ 45–47, 50, 58, 62–64; Pet. 12–13, 16. Lionetto's first path consists of male shield conductor 10 contacting annular leaf spring 22, which contacts internal sleeve 14 of female shield conductor 12. *See* Ex. 1008, 2:1–12, 2:31–44, 2:50–58 (claim 1). Lionetto's second path consists of male shield conductor 10 contacting conductive elastomer gasket ring 34, which contacts internal sleeve 14 of female shield conductor 12. *See id.* at 2:34–36, 3:14–20 (claim 3).

In short, we find that Lionetto and Horak each teach that it is beneficial to have multiple shielding electrical ground paths in a coaxial cable connector, to account for loosening of the connector as it is subjected to different conditions over time. Lionetto and Horak further demonstrate that it was known to use ring-shaped conductive elastomers (Lionetto's conductive elastomer 34 and Horak's conductive rubber ring 18) disposed between two metal conductors, to electrically connect the metal conductors and thereby extend a grounding shield through a coaxial cable connector.[12] *See supra* Section III.B.3.e.ii.(b).

We further find that a person of ordinary skill in the art seeking to implement those teachings from Lionetto and Horak would have been motivated to add a second (redundant) grounding path to a connector that has only a single grounding path (such as the connector in Youtsey). Doing so in Youtsey, as Petitioner proposes, would provide the desired second

[12] As noted above (*see* Section III.B.3.e.ii.(b)), we do not rely on Lionetto or Horak as teaching an o-ring as that structure is disclosed by Youtsey.

grounding path—from outer conductor 24, to body portion 14, to o-ring 84, to coupling portion 30.

"A person of ordinary skill is also a person of ordinary creativity, not an automaton," and "in many cases a person of ordinary skill will be able to fit the teachings of multiple patents together like pieces of a puzzle." *KSR*, 550 U.S. at 420–21. This is particularly the case here, where it was known prior to the '983 patent to use different conductive components to provide grounding shield paths through a coaxial cable connector. *See supra* Section III.B.3.e.iii. As explained above, Patent Owner's opposing view of prior art solutions to the loose connector problem as motivating use of only a post, and not a body, to complete a grounding path is not supported sufficiently by the evidence. *See id.* Also as explained above, claim 1 does not exclude using a post to provide a grounding shield path. *See id.* Therefore, even if using a post were somehow a critical aspect of completing a grounding path as Patent Owner contends, this is performed by Youtsey's existing ground path through post 28. Maintaining the grounding path through the post does not preclude or otherwise detract from also using a body portion, such as Youtsey's outer barrel 14, to provide a redundant ground path, thereby satisfying element 1[d].

We disagree with Patent Owner's arguments and Dr. Eldering's testimony to the contrary. First, for reasons provided above in Section III.B.3.e.iii, the evidence does not support Patent Owner's position that the prior art is limited to using "***the post***" and "***not the body***" (PO Resp. 20) to create a shielding ground path through a connector. Patent Owner's position that the Petition is fatally deficient because it "fail[s] to identify ***any*** prior art references that teach or suggest a coupler-body

grounding member located between the ***coupler and the body***" (PO Resp. 7, 8–9) improperly attempts to hold Petitioner to a rigid teaching, suggestion, or motivation standard. *See KSR*, 550 U.S. at 415 ("We begin by rejecting the rigid [teaching, suggestion, motivation] approach.").

The proper inquiry is whether Petitioner has articulated adequate reasoning based on a rational underpinning, supported by a preponderance of the evidence, to explain why a person of ordinary skill in the art would have been led to combine Youtsey with Lionetto and Horak in the fashion claimed. *See KSR*, 550 U.S. at 418. We conclude Petitioner has satisfied that here, for the reasons provided above, even assuming that neither Lionetto nor Horak discloses a coupler-body grounding portion, or an o-ring structure. This is because Youtsey's o-ring 84 is disposed between and contacts Youtsey's coupler 30 and Youtsey's body 14, and Petitioner has articulated a reason with a rational basis for modifying Youtsey's o-ring 84 to be conductive based on the disclosures of Lionetto and Horak without hindsight bias, as discussed above.

Second, we disagree with Patent Owner that Youtsey *solves* the loose connector problem, and thereby nullifies any motivation to provide a redundant shielding ground path. No doubt, Youtsey's existing o-rings 82 and 84 function to "seal the interior of the coaxial cable end connector 10 from moisture and other corrosive agents in the ambient environment," and "to retain the parts of the coaxial cable end connector 10 together until the connector 10 is fixed to the end of a coax cable by crimping." Ex. 1007, Figs. 1–3, 5:45–55; *see also* Ex. 2041, 59:15–61:9, 108:4–111:5; Ex. 2042 ¶¶ 215–220. However, we determine that these teachings do not detract from Petitioner's motivation arguments. Dr. Dickens testifies that the

redundant shielding ground path provided by a conductive o-ring 84 would be beneficial either "when the connector is not properly tightened onto the port," or when "movement of the cable causes the ground path between the post and the nut to break." Ex. 1005 ¶ 57. Either of those two events could occur even if Youtsey's existing o-rings 82 and 84 are functioning as intended to seal the interior of the connector from exposure to corrosive agents in the environment, and to retain the parts of the connector together. We do not agree with the premise of Patent Owner's argument that it is *only* corrosion caused by moisture intrusion (*see* PO Resp. 41–46; PO Sur-reply 21–22) that can lead to breaking of the ground path between Youtsey's post 28 and nut 30. As Dr. Dickens testifies (see above), and Dr. Eldering does not materially dispute, this breakage can *also* be caused by an improper tightening of the connector, or by movement of the connected coaxial cables over time.[13] Thus, we find that a preponderance of the evidence indicates there are some circumstances in which the redundant shielding ground path—provided by modifying Youtsey's o-ring 84 to be conductive—would be beneficial, which provides a reason with a rational basis why a person of ordinary skill in the art would have been motivated to make this modification without the benefit of hindsight.

Third, Patent Owner's reliance on a desire to provide a grounding path with as few failure points as possible does not detract from Petitioner's motivation to modify Youtsey's o-ring 84 to be conductive. This

[13] Indeed, in another IPR proceeding, Patent Owner's counsel stated, "[t]his problem of loose connectors has haunted customers and multiple system operators ('MSOs' or 'cable companies') over many decades." Ex. 1034, 4; *see* Tr. 90:5–91:1.

modification would have been made to provide a second (redundant) ground path in Youtsey, for the very purpose of compensating for failures in Youtsey's existing ground path, as discussed above. In other words, Petitioner's modification results in a more robust ground path structure, not a reduced ground path structure. Moreover, the Federal Circuit's "precedent . . . does not require that the motivation be the *best* option, only that it be a *suitable* option from which the prior art did not teach away." *PAR Pharm., Inc. v. TWI Pharms., Inc.*, 773 F.3d 1186, 1197–98 (Fed. Cir. 2014). So, even if Petitioner's proposed second grounding path could have been improved by further modification(s) to reduce failure points, these potential weaknesses do not detract sufficiently from the proposed suitable improvement of simply making o-ring 84 conductive.[14]

We find that the redundant grounding path provided by Petitioner's modification of Youtsey's o-ring 84 to be conductive is a sufficiently articulated and rational motivation, based on a preponderance of the evidence including Lionetto and Horak, that avoids improper hindsight in Petitioner's proposed modification.

(b) Petitioner's Second Motivation—Crevice Susceptible to RFI

Petitioner's second motivation for modifying Youtsey's o-ring 84 to be conductive is that the particular crevice where the o-ring is located is "susceptible to RFI," because it is "susceptible to moisture intrusion" as described in Youtsey. Pet. 17 (citing Ex. 1001, 1:53–67; Ex. 1007, 1:19–22,

[14] *See infra* Section III.B.3.e.vii (weighing the advantages and disadvantages of the proposed combination when assessing motivation to combine).

2:14–16, 5:50–53; Ex. 1005 ¶ 61); Pet. Reply 14–16 (citing Ex. 1026 ¶¶ 300–304; Ex. 2023, 1:65–2:3; Ex. 2034, 1:13–39; Ex. 2035, 1:15–2:21; Inst. Dec. 69–70).

Patent Owner argues the evidence does not support Petitioner's contention that Youtsey's o-ring 84 is located in a crevice that is susceptible to RFI, and a person of ordinary in the art instead would have understood Youtsey's central conductor 20 "***is completely surrounded***, and physically and electrically protected, ***except for where it is exposed inside of the coupler/nut 30***" which would not be protected by making Youtsey's o-ring 84 conductive. PO Resp. 34–36 (citing Ex. 1007, Fig. 3, 2:65–67; Ex. 2001 ¶¶ 175–178; Ex. 2041, 78:12–79:22, 100:12–101:7; Ex. 2042 ¶¶ 283–284, 286). Indeed, according to Patent Owner, the evidence "contradict[s]" Petitioner's crevice theory. *See id.* at 36–38 (citing Ex. 1007, Fig. 3; Ex. 2001 ¶¶ 178–185; Ex. 2021, 1:22–35; Ex. 2041, 91:4–92:9; Ex. 2042 ¶¶ 279–282).

We do not rely on Petitioner's second motivation theory to support this Decision.

(c) Patent Owner's First Disadvantage—Inferior Environmental Seal

Patent Owner argues that modifying Youtsey's o-ring 84 to be conductive would reduce the compressibility of the o-ring due to the added conductive component(s), thereby interfering with its ability to seal out moisture. *See* PO Resp. 22–23, 46–51. This is why, Patent Owner urges, some prior art solutions to the loose connector problem, allegedly including Youtsey, used *non-conductive* o-rings to seal out moisture and avoid corrosion that leads to looseness. *See id.* at 23–25 (summarizing Ex. 1007

(Youtsey) and Ex. 1010 (Tarrant)) (citing Ex. 2041, 59:15–61:9, 108:4–111:5); Ex. 2042 ¶¶ 218–223. Patent Owner therefore concludes a person of ordinary skill in the art "would not [have been] motivated" to make Youtsey's o-ring 84 conductive. PO Resp. 24–25; Ex. 2042 ¶ 223.

Patent Owner relies on Choudary (Ex. 2034, U.S. Patent No. 6,173,970, issued Jan. 16, 2001) in this regard, as "teach[ing] that conductive gaskets were known for reducing EMI and RFI," but also "identif[ying] a number of known problems with using these known conductive gaskets" including a "difficulty in providing a 'proper environmental seal.'" PO Resp. 47–48 (citing Ex. 2034, 1:28–36, 1:50–57, 1:61–63); Ex. 2042 ¶¶ 237–238. Patent Owner also relies on Bunyan (Ex. 2035, U.S. Patent No. 8,633,402, issued Jan. 21, 2014) as "further teach[ing] that conductive gaskets . . . have a number of known problems, including their difficulty in providing a 'desired environmental seal' which can lead to corrosion." PO Resp. 48 (citing Ex. 2035, 2:4–8, 2:22–43); Ex. 2042 ¶ 239.

"Given these problems," Patent Owner urges, the prior art "teaches that separate products are typically provided for environmental sealing and EMI shielding to avoid corrosion because a single gasket frequently cannot provide both functions satisfactorily." PO Resp. 48–49 (citing Ex. 1009, Fig. 3, 3:42–47, 4:47–49; Ex. 2035, 2:46–53); *id.* at 39–40; Ex. 2042 ¶¶ 240–243, 290–291. Patent Owner further asserts "[t]his is confirmed by . . . Petitioner's own patent application," filed several years after the '983 patent's priority date. PO Resp. 48–51 (citing Ex. 2013, Figs. 4–5, ¶¶ 3, 14, 17, 18); Ex. 2001 ¶¶ 190–193. Patent Owner relatedly argues that making Youtsey's o-ring 84 conductive would render it "inoperable for [its]

intended purpose (*i.e.*, preventing water infiltration and resulting corrosion)." PO Resp. 51; Ex. 2042 ¶ 243.

Petitioner replies that it "has [been] known—since at least 1975—that a conductive o-ring can provide weather sealing and block RF interference at the same time," which "aligns with the stated objective of Youtsey . . . to protect against signal degradation." Pet. Reply 22–23 (citing Pet. 13–14, 17–19; Ex. 1007, 1:16–22, 2:16–19; Ex. 1009, 4:66–5:11; Ex. 1011, 2:17–21, 3:16–18); Ex. 1005 ¶¶ 55–66. Petitioner asserts Choudary and Bunyan do not support Patent Owner's argument "that conductive o-rings always provide inferior environmental seals" because, instead, they both "disclose a gasket that combines RFI shielding and environmental sealing." Pet. Reply 23 (citing PO Resp. 47–48; Ex. 2034, 1:5–10, 1:13–20, 1:53–61, 2:51–61; Ex. 2035, 2:46–60, 3:38–42, 5:3–10); Ex. 1026 ¶¶ 325–329.

Patent Owner replies that Petitioner has not disputed "conductive elastomers would provide inferior environmental seals compared to non-conductive elastomers," and Petitioner instead "merely made the conclusory statement that the seals would be 'sufficient.'" PO Sur-reply 11 (citing Pet. Reply 19). Patent Owner asserts the parties have "agreed that the fundamental objective of . . . Youtsey . . . was to provide an environmental seal to avoid moisture infiltration." *Id.* at 19–20 (citing Pet. Reply 22–23; Ex. 1027, 166:7–167:15; Ex. 2044, 467:16–470:2). Patent Owner maintains Choudary and Bunyan demonstrate "it was well known in 2004 that use of . . . conductive elastomers would result in inferior environmental sealing." *Id.* (citing PO Resp. 47–51). Patent Owner concludes there is no motivation "to negate" the "superior" environmental seal provided by Youtsey's

non-conductive o-ring with an "inferior" environmental seal provided by a conductive o-ring. *Id.* at 21.

Patent Owner further argues "Petitioner ambiguously theorized" Choudary and Bunyan "describe conductive gaskets that provide an environmental seal," whereas "in reality, these references teach the use of ***non-conductive*** gasket components to provide environmental seals." PO Sur-reply 20 (citing Pet. Reply 23–24; Ex. 2034, Fig. 1, 2:38–3:9; Ex. 2035, code (57), 3:50–56). Patent Owner also cites Bell as "confirm[ing] that conductive o-ring 34 would provide an inferior 'degree of sealing' relative to the superior sealing provided by a non-conductive o-ring." *Id.* at 20–21 (citing Ex. 1011, 2:18–21; Ex. 2044, 470:16–471:8).

We determine Petitioner has the better argument. First, the prior art reflects that an elastomeric ring structure may be used to provide *both* an environmental seal *and* a conductive pathway between two other conductors. As one example, Horak discloses its rubber ring 18 is compressed "to expand inward radially *thereby providing a weather-proof seal* with the conductive jacket 62," while "at the same time" providing "*[a]dditional security from RFI . . . by using a conductive rubber* for the ring 18." Ex. 1009, Figs. 2–3, 2:48–56, 4:38–42, 4:67–5:11 (emphases added). Patent Owner points out that Horak's connector also has non-conductive o-rings 48 and 52 for weatherproof sealing, but it is readily apparent from Horak's Figures 2 and 3 that those seals weatherproof a different part of the connector than rubber ring 18, and do not act as a "backup" to the weatherproofing of rubber ring 18.

As a second example, Choudary discloses "a gasket combining functions such as *electromagnetic interference or radio frequency*

interference (EMI/RFI) shielding, *environmental protection*, and galvanic protection attributes." Ex. 2034, 1:6–10 (emphases added), 1:28–36 (further describing the shielding functionality). Choudary states one "difficulty with known gaskets for providing EMI/RFI shielding is that the gasket material, while resilient, is not as compressible and resilient as other materials," and "[t]he reduced compressibility sometimes makes it difficult for the gasket to provide a proper environmental shield." *Id.* at 1:50–57. Choudary nonetheless concludes, despite this difficulty, that "[i]t is desirable to provide a gasket that combines high levels of EMI/RFI shielding with high compressibility and resilience characteristics to provide high levels of environmental shielding." *Id.* at 1:57–60. Choudary then discloses gasket 21, made by joining together first resilient component 25 having good environmental sealing properties, and second resilient component 27 being conductive to provide good shielding properties. *Id.* at Fig. 1, 1:66–2:17, 2:38–54. Thus, although Choudary recognizes there are challenges in designing an elastomeric structure to provide both an environmental seal and a conductive pathway, there are ways to overcome these challenges.

As a third example, Bell provides "a conductive resilient O-ring 34, which *provides a degree of sealing* between the plug body 12 and the outlet body 22," while also being "*made from a conductive material to form part of the electrical path* from the plug body 12 to the braid 64." Ex. 1011, 2:17–21, 3:16–18 (emphases added).

Further, Bunyan[15] recognizes "gaskets and other seals have been proposed *both* for maintaining electrical continuity across the structure, *and* for excluding from the interior of the device such contaminates as moisture and dust." Ex. 2035, 2:4–21 (emphases added). Bunyan describes various structural configurations for such gaskets (*see id.* at 2:22–30), and then discusses how such gaskets "exhibit a number of problems in actual use" (*id.* at 2:31–45) such that "it is frequently the case that gaskets providing satisfactory EMI shielding capabilities are unable to provide environmental sealing, thereby causing corrosion problems" (*id.* at 2:46–51). "As a result, the EMI shielding and environmental sealing functions have typically been seen as two separate functions requiring two separate products." *Id.* at 2:51–60. Bunyan accordingly provides "an EMI gasket having *both* enhanced resistance to corrosion *and* a reduction in the compressive forces required to form a seal between adjacent surfaces in circumstances where both sealing and EMI shielding are required." *Id.* at 5:3–10 (emphasis added); *see also id.* at Figs. 3–4, 5:51–63, 6:16–54, 7:4–12 (Bunyan's gasket comprises a rod-shaped conductive elastomeric polymer 5 having rib sections 6, and a non-conductive polymer gel 7 disposed between the ribs to provide sealing). Thus, although Bunyan recognizes there are challenges in designing a gasket to provide both an environmental seal and a conductive pathway, there are ways to overcome these challenges.

At best for Patent Owner, the foregoing evidence shows a person of ordinary skill in the art would have known that modifying Youtsey's

[15] Bunyan may not be prior art to the '983 patent. *See* Ex. 1001, code (63); Ex. 2035, code (60). Patent Owner nonetheless argues Bunyan supports its arguments here, so we address it accordingly.

o-ring 84 to be conductive to achieve the *benefit* of a redundant shielding ground path (*see supra* Section III.B.3.e.iv.(a))) might be associated with the *drawback* of reduced environmental sealing versus Youtsey's existing non-conductive o-ring 84. However, as discussed above, the evidence also shows a person of ordinary skill in the art knew of ways to minimize the latter drawback, while still achieving the former benefit. Most importantly, Horak and Bell both teach an elastomeric ring structure may be used to provide *both* a sufficient environmental seal *and* a sufficient grounding conductive pathway in the specific context of a coaxial cable connection.

Dr. Eldering's testimony on behalf of Patent Owner does not add much to our foregoing consideration of the prior art. He emphasizes Youtsey's desire to use its o-ring 84 to provide a good environmental seal. *See* Ex. 2042 ¶¶ 215–220, 236, 243. He also summarizes the disclosures of Choudary and Bunyan concerning the challenges in designing a gasket that provides both an environmental seal and a conductive pathway. *See id.* ¶¶ 236–243. However, Dr. Eldering does not grapple with Horak's description of rubber ring 18 as providing both an environmental seal and a conductive pathway. *See id.* ¶¶ 242, 290–291. Nor does he explain sufficiently why a person of ordinary skill in the art might have been deterred from following Bell's, Choudary's, and Bunyan's common approach of using one gasket to provide both an environmental seal and a conductive pathway, despite the design challenges this might pose.

We appreciate, as Dr. Eldering testifies, that another way to achieve both goals is to use two separate products—a compressible but non-conductive product for environmental sealing, and a stiffer conductive product for conductivity—rather than one product such as the compressible

and conductive o-ring proposed by Petitioner's combination. *See* Ex. 2042 ¶¶ 240–241, 243 (discussing Bunyan). For example, the patent application filed by Petitioner and discussed by Patent Owner and Dr. Eldering provides such a solution. *See* PO Resp. 49–50; Ex. 2001 ¶¶ 190–193; Ex. 2013, code (57), Figs. 4–5, ¶¶ 3, 5, 14, 17–18. Nonetheless, obviousness requires only that the proposed solution is a suitable option, not that it is the best option. *See PAR Pharm.*, 773 F.3d at 1197–98.

We find the prior art demonstrates that a single elastomeric ring structure can have both sufficient compressibility to provide an environmental seal, and sufficient conductivity to extend a shielding ground path, in a coaxial cable connector. We, therefore, turn to Patent Owner's further argument that modifying Youtsey's o-ring 84 to be conductive and thereby perform both functions would have the further disadvantageous effect of inhibiting free rotation of Youtsey's coupling portion 30 around Youtsey's body portion 14.

(d) Patent Owner's Second Disadvantage—Increased Resistance to Rotation

Patent Owner argues that modifying Youtsey's o-ring 84 to be conductive would reduce the compressibility of the o-ring due to the added conductive component(s), disadvantageously increasing the connector's resistance to free rotation of coupling portion 30, and thereby exacerbating any loose connection problem (assuming there is one), leading away from Petitioner's proposed modification. *See* PO Resp. 25–27, 51–64. For the following reasons, we disagree.

Compressibility of Conductive Elastomer O-Rings

Patent Owner asserts conductive elastomers "require *significant compression* to form a conductive pathway." PO Resp. 25–27 (section heading modified, emphasis added). Patent Owner relies on Peng (Ex. 2033, U.S. Patent No. 6,121,545, issued Sept. 19, 2000) in this regard. *See id.* Patent Owner argues "Peng teaches that an EMI shielding gasket would have a resilient core element that is formed of an elastomeric material and is either filled, sheathed, or coated with electrically conductive metal particles, fabrics, meshes, or fibers." *Id.* at 25 (citing Ex. 2033, 2:8–24); Ex. 2042 ¶¶ 224–225. Dr. Eldering provides two demonstrative illustrations of a conductor-filled shielding gasket, reproduced below.

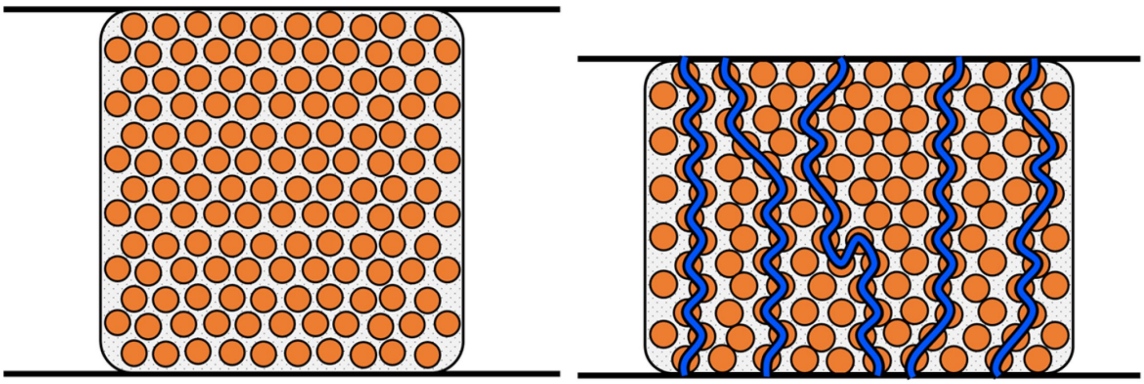

These two illustrations are cross-sectional views of a "conductive elastomer with an elastomeric material core and conductive fillers (shown in orange)." Ex. 2042 ¶¶ 225–227. The illustration on the left shows the elastomeric core in an uncompressed state, and the illustration on the right shows the elastomeric core in a compressed state. *Id.* ¶¶ 226–227. Dr. Eldering testifies a person of ordinary skill in the art would have understood:

> (i) the conductive elastomer must be sufficiently compressed (*i.e.*, 10% minimum to as much as 50%) with higher compression providing better conductivity (hence higher shielding effectiveness) because the conductive fillers need to

> have sufficient contact with each other inside of the conductive elastomer to form one or more conductive pathways (shown in blue) as illustrated [on the right; and] (ii) the conductive fillers need to have sufficient contact with the contacting conductive surfaces at the edge or surface of the conductive elastomer.

Id. ¶ 227 (citing Ex. 2033, 4:19–23, 9:2–6); *see* PO Resp. 26.

Petitioner replies that conductive o-rings do not require increased compression versus non-conductive o-rings. *See* Pet. Reply 9. Petitioner asserts Patent Owner "relies solely on Peng and an unsourced graphic created by Dr. Eldering" to support a position that conflicts with the prior art and the knowledge of a person of ordinary skill in the art. *Id.* (citing PO Resp. 25–26, 59–64; Ex. 1027, 120:8–12). Petitioner argues Peng does not support Patent Owner's argument "that compression properties of a conductive elastomer filled with conductive material (not even an o-ring) applies to all types of conductive o-rings." *Id.* at 9–10 (citing PO Resp. 61–62, 25–27; Ex. 2042 ¶¶ 226–227; Ex. 1027, 124:8–18).

Petitioner's view is that Dr. Eldering's demonstrative illustrations are limited to "an elastomeric material core and conductive fillers," whereas Peng discloses conductive elastomer o-rings also may be "sheathed, or coated with electrically conductive metal particles, fabrics, meshes, or fibers." Pet. Reply 10 (citing Ex. 2033, 2:8–24; Ex. 1027, 155:22–157:1); Ex. 1026 ¶¶ 282–285. Petitioner asserts: "Nothing in Peng suggests that these other types of o-rings would require significant compression." Pet. Reply 10; Ex. 1026 ¶ 284.

Dr. Dickens provides two demonstrative illustrations of an o-ring with a conductive sheath or coating, reproduced below.

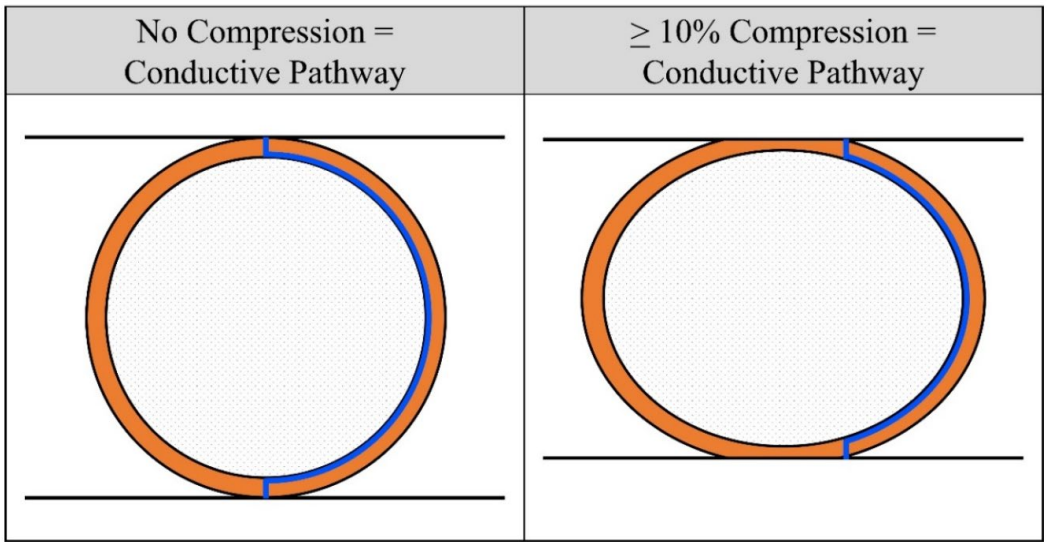

These two illustrations show an elastomeric o-ring (in orange) having a conductive sheathing or coating (in blue). *See* Ex. 1026 ¶¶ 284–285. The illustration on the left shows the o-ring without any compression and having a conductive pathway from the top to the bottom, and the illustration on the right shows the o-ring under ≥ 10% compression and having a conductive pathway from the top to the bottom. *See id.* Dr. Dickens concludes "a conductive o-ring may demonstrate conductive and shielding properties without requiring additional compression beyond the standard compression for sealing o-rings, like" Youtsey's existing o-ring 84. *Id.* ¶ 285 (citing Ex. 1032 (Squitieri), 1:35–39).

Petitioner also cites several prior art references as establishing that "the compression needed to properly install such an o-ring is well within the expertise of a" person of ordinary skill in the art. Pet. Reply 11 (citing Ex. 1007 (Youtsey), 5:45–53; Ex. 1010 (Tarrant), 3:41–50; Ex. 1008 (Lionetto), 2:31–36, 3:14–20; Ex. 1009 (Horak), 4:67–5:11; Ex. 1011 (Bell), 2:18–21, 3:13–31; Ex. 2030 (Rodrigues), 6:4–14); Ex. 1026 ¶ 286. In particular, according to Petitioner, each of Lionetto, Horak, and Bell

"teaches an o-ring that provides both weather sealing and protection from RFI." Pet. Reply 12; Ex. 1026 ¶ 293 (citing Ex. 1005 ¶¶ 55–66, 171–179).

Petitioner further asserts other prior art, such as Buonanno (Ex. 1031) and Squitieri (Ex. 1032), "teaches that gaskets with conductive sheaths could be used to block 'electromagnetic interference (EMI), while also sealing the gap environmentally against airflow, noise, dust or the like.'" Pet. Reply 12 (quoting Ex. 1031, 1:7–11) (citing Ex. 1032, 1:35–39); Ex. 1026 ¶ 292. Petitioner adds that "conductive o-rings in 2004 did not require increased compression and were fully 'interchangeable with standard non-conductive seals of the same dimensions,'" as established by a Chomerics Handbook reference (Ex. 1028). Pet. Reply 12 (quoting Ex. 1028, 63); Ex. 1026 ¶¶ 293–294.

Patent Owner replies that Petitioner's reliance on Peng's conductor-"sheathed" and conductor-"coated" embodiments (Ex. 2033, 2:8–21) exceeds the proper scope for a reply under 37 C.F.R. § 42.23(b). *See* Paper 25, 4 (cite #3), 14 (cites #15, #16); PO Sur-reply 2, 13, 15, 17. Patent Owner cites Dr. Dickens's deposition testimony, during which he "testified that a [person of ordinary skill in the art] would have used 'metal-impregnated' or 'metal-filled' conductive o-rings in his proposed modification." PO Sur-reply 13 & n.8 (citing Ex. 2041, 172:2–6, 209:10–210:22, 227:22–228:12, 231:21–235:4, 284:3–286:11, 322:21–323:8; Ex. 2044, 410:11–411:1). On the merits in this regard, Patent Owner characterizes Petitioner's argument as being that "*no* compression was required" for conductivity (*id.* at 15, 17 (emphasis added)), and asserts this is "based on the undocumented knowledge of a [person of ordinary skill in the

art]" because Petitioner "provide[s] no supporting evidence that such o-rings even existed" (*id.* at 2, 15–16).

Patent Owner replies further that the evidence shows "the required compression of a metal-filled conductive elastomer is in the range of ***10% minimum to as much as 50%***, with higher compression providing higher shielding effectiveness." PO Sur-reply 13 (citing PO Resp. 25–27, 60; Ex. 2044, 408:7–409:11).

Patent Owner asserts Petitioner's reliance on Buonanno, Squitieri, and the Chomerics Handbook exceeds the proper scope for a reply under 37 C.F.R. § 42.23(b). *See* Paper 25, 5–6 (cites #4, #5), 11 (cite #11), 15–17 (cites #17–19), 21–23 (cites #25–27), 24 (cites #29, #30); PO Sur-reply 14, 16 (citing Ex. 2041, 231:21–235:4; Ex. 2044, 424:1–425:3). Patent Owner adds that Buonanno and Squitieri bely Petitioner's motivation theory because they "actually teach that conductive sheathing seals were compressed," and the Chomerics Handbook supports Patent Owner's arguments because it "confirms that a metal-filled conductive o-ring must be '***compressed in a properly designed groove***' and that '***[g]rooves should be designed to assure 10 to 20% deflection of the gasket***.'" PO Sur-reply 14 (alteration in original) (quoting Ex. 1028, 32–33, 63) (citing Ex. 2044, 425:4–428:17, 420:17–423:13, 428:19–430:22); *id.* at 16–17 (citing Ex. 1031, Figs. 1–2, 3:66–67; Ex. 1032, Figs. 1–4; Ex. 2044, 415:4–420:16).

As an initial matter, we disagree with Patent Owner's position that Petitioner's reliance on Peng exceeds the proper scope for a reply. In the Petition, Petitioner asserts a person of ordinary skill in the art would have been motivated to make Youtsey's o-ring 84 conductive. *See* Pet. 15–18. The Patent Owner Response cites Peng as supporting Patent Owner's

arguments, while simultaneously objecting to Dr. Dickens's citation to Peng during his first deposition on the basis that neither the Petition nor Dr. Dickens's first declaration cites to Peng. *See* PO Resp. 25 & n.5; Ex. 2041, 231:21–233:13, 234:14–235:4.

Patent Owner's argument and Dr. Eldering's testimony rely heavily on Peng's statements that "a minimum deflection, typically of about 10%, is specified . . . to develop an electrically conductive pathway" and "the ultimate shielding effectiveness of the cured gasket will vary based on the amount of electrically-conductive material in the filler and the imposed load or deflection, typically between about 10–50%, of the gasket." Ex. 2033, 4:14–22, 9:2–6; *see* PO Resp. 25–27; Ex. 2042 ¶¶ 225–227. We cannot extricate the argument from the evidence. Without Peng, Dr. Eldering's testimony that a conductive elastomer requires at least about a 10% compression to provide a conductive path would lack any underlying factual basis and we would thus give it very little, if any, weight. The same is true of Patent Owner's argument as it would be unsupported by the evidence of record.

Patent Owner's and Dr. Eldering's reliance on Peng opens the door for Petitioner to explain in reply why Peng supports Petitioner's arguments rather than Patent Owner's arguments. In particular, Patent Owner relies on Peng's conductor-"filled" embodiment (Ex. 2033, 2:8–24) as providing an unsuitably stiff structure for use as Youtsey's o-ring 84. *See* PO Resp. 25–27; Ex. 2042 ¶¶ 225–227. This reliance opens the door for Petitioner to cite Peng's conductor-"sheathed" and conductor-"coated" embodiments (Ex. 2033, 2:8–24) as alternative structures that are suitable for use as Youtsey's o-ring 84.

Turning to the merits, we are persuaded by Dr. Eldering's testimony that an elastomeric o-ring using a *conductive filler* requires at least about a 10% compression to complete a grounding pathway through an o-ring. *See* Ex. 2042 ¶¶ 225–227. This testimony is supported by Peng. *See* Ex. 2033, 2:8–27, 4:19–22, 9:2–6. Dr. Dickens opines that Peng's disclosure concerns "a flat spacer gasket" rather than an o-ring like Youtsey's o-ring 84, and he concludes "Peng's compression requirements of the flat elastomeric member 24 are not representative of all conductive o-rings." Ex. 1026 ¶¶ 283, 287–290 (citing Ex. 2033, Figs. 1, 2A, 2B, 3:59–4:35; Ex. 1027, 146:13–148:22). However, Dr. Dickens does not materially dispute Dr. Eldering's testimony that an o-ring incorporating a conductive filler requires at least some minimum compression to form a conductive pathway. *See* Ex. 2042 ¶¶ 225–227; Ex. 1026 ¶¶ 287–290; Ex. 2044, 408:7–411:8 (Dr. Dickens testifying on cross-examination that no "deflection" is required for conductivity, but not citing any evidence to support this testimony). We are persuaded by Dr. Eldering's testimony and demonstrative illustrations in that regard.

Next, we are persuaded by Dr. Dickens's testimony that an elastomeric o-ring may be made conductive by using a *conductive coating* or a *conductive sheathing*, as opposed to the *conductive filler* discussed by Dr. Eldering. *See* Ex. 1026 ¶¶ 284–286. This testimony is supported by Peng, and is not materially disputed by Dr. Eldering. *See* Ex. 2033, 2:8–27; Ex. 1027, 155:22–157:8. We are also persuaded by Dr. Dickens's testimony that a person of ordinary skill in the art would have known a conductor-coated or conductor-sheathed elastomeric o-ring "may demonstrate conductive and shielding properties without requiring additional

compression beyond the standard compression for sealing o-rings" like Youtsey's o-ring 84. Ex. 1026 ¶¶ 284–285.

Petitioner and Dr. Dickens also rely on Squitieri, Buonanno, and the Chomerics Handbook as teaching that gaskets with conductive sheaths can block electromagnetic interference and provide an environmental seal at the same time, without requiring more compression than a non-conductive sealing gasket. *See* Pet. Reply 12; Ex. 1026 ¶¶ 285, 292–293. However, in our view this proposition is established sufficiently by Horak, Bell, Choudary, Bunyan, and Peng as discussed above, so we do not rely on Squitieri, Buonanno, or the Chomerics Handbook in this Decision.

Coupler Rotation in Coaxial Cable Connectors

Patent Owner next asserts a person of ordinary skill in the art would have understood that couplers such as Youtsey's coupling portion 30 "need to be ***freely rotatable*** in order to easily screw or thread the connector onto the port [16]." PO Resp. 51–52 (citing Ex. 1005 ¶¶ 123, 163; Ex. 1007, Fig. 3, 5:29–35; Ex. 2041, 57:8–59:2, 198:6–199:21, 200:4–202:1, 258:12–259:17); Ex. 2042 ¶¶ 244–245. Patent Owner cites various prior art references as supporting this view. *See* PO Resp. 52–55 (summarizing Ex. 2037 (Burris), Ex. 2038 (Samchisen), and Ex. 2023 (Bence)); Ex. 2042 ¶¶ 246–249. Patent Owner concludes a person of ordinary skill in the art would have known it was "necessary to *lightly compress* Youtsey's non-conductive o-ring 84 . . . between the coupler [30] and the body [14] just enough to provide an environmental seal, while producing as little friction and drag as possible on the coupler." PO Resp. 55 (emphasis added); Ex. 2042 ¶ 250.

This alleged need for free rotation, according to Patent Owner, is inconsistent with modifying Youtsey's o-ring 84 to be conductive, because this "would require *larger compression forces* to establish the required electrical conductivity," as discussed above. PO Resp. 55 (emphasis added); Ex. 2042 ¶ 251. Patent Owner asserts these larger compression forces "would undesirably increase the friction or drag on the coupler, and thus make it much more likely that a connector would not be fully tightened onto an interface port (*i.e.*, the proposed modification would cause the very same problem that it was intended to solve!)." PO Resp. 55–56, 60–61; Ex. 2042 ¶¶ 251, 262. This compressibility difference between conductive and non-conductive elastomers is illustrated, in Patent Owner's view, by Youtsey's o-ring 84 and Tarrant's o-ring 12 being *non-conductive o-rings* having a circular cross-section (thereby reducing their resistance to tightening and providing free rotation), and by Lionetto's elastomer 34 and Horak's elastomer 18 being *conductive* but <u>not</u> *o-rings* because they have flat sides (allowing them to fill the space between connected components, to provide a more reliable electrical connection). *See* PO Resp. 56–59 (citing Ex. 1008, Fig. 1, 2:31–36; Ex. 1009, Fig. 3, 4:20–47; Ex. 2033 (Peng), 1:54–58; Ex. 2035 (Bunyan), 2:4–8; Ex. 2041, 224:8–20, 225:21–226:15); Ex. 2001 ¶¶ 90–91; Ex. 2042 ¶¶ 252–255, 258–259.

Indeed, according to Patent Owner, a person of ordinary skill in the art "would understand that for the rotary seals provided by the nonconductive o-rings in Youtsey (84) and Tarrant (12), *the compression would be much lower than 10%, and likely no more than 5%* in order to provide free rotation of the coupler." PO Resp. 59–60 (emphasis added) (citing Ex. 2039, 1). Patent Owner contrasts this alleged understanding with Peng, which as

discussed above indicates an elastomeric o-ring using a conductive filler requires at least about a 10% compression to complete a conductive pathway. *Id.* at 60 (citing Ex. 2033, 4:19–23, 9:2–6). Thus, Dr. Eldering testifies that "the lower compression used for the non-conductive o-rings in Youtsey and Tarrant [i.e., no more than 5%] to provide a freely rotatable coupler would have to be significantly increased [i.e., to greater than 10%] for compressing a []conductive o-ring to provide the required compression to form one or more conductive pathways." Ex. 2042 ¶ 261; *see* PO Resp. 60; PO Sur-reply 17 n.13 (stating that the last sentence of paragraph 261 of Exhibit 2042 "should read 'for compressing a ***conductive*** o-ring'"); Ex. 2042 ¶¶ 260–261.

According to Patent Owner, Bell's disclosure of conductive o-ring 34 is not to the contrary, because Bell discloses a right-angle and unthreaded connector where "resistance to rotation was actually desirable" which is not the case with Youtsey's "freely rotating coupler." PO Resp. 60–61 (citing Ex. 1011, code (57), Fig. 1, 3:18–34; Ex. 2041, 303:15–306:7); Ex. 2042 ¶¶ 263–265.

Patent Owner challenges Dr. Dickens's testimony as lacking support in and being contradicted by documentary evidence. *See* PO Resp. 61–63 (citing Ex. 2033, 4:19–23, 9:2–6, 9:15–35; Ex. 2041, 238:5–239:22); Ex. 2042 ¶ 266. In particular, according to Patent Owner, "manufacturers recommend a certain compression to form . . . an electrical path," and Peng discloses "a required minimum compression of 10%." PO Resp. 61. Patent Owner also argues Dr. Dickens's testimony lacks a persuasive explanation of how the proposed modification would have been implemented using an o-ring structure. *See id.* at 61–63 (citing Ex. 1005 ¶¶ 55–58, 62, 171–174;

Ex. 2041, 206:17–207:20, 231:21–235:4, 285:17–286:11); Ex. 2042 ¶¶ 267–269.

Petitioner replies that conductive o-rings do not limit free rotation of the coupler. *See* Pet. Reply 12. Petitioner asserts Patent Owner's arguments in this regard "incorrectly assume that conductive o-rings require more compression than non-conductive sealing o-rings," as discussed above. *Id.* at 12–13; Ex. 1026 ¶ 295. Petitioner further asserts Patent Owner mistakenly relies on Bell, because although "Bell discloses a conductive, sealing o-ring that provides 'some resistance to rotation,'" Bell also teaches that "***the user of the connector can rotate the cable assembly***" demonstrating "that conductive, sealing o-rings do not resist free rotation of a coupler." Pet. Reply 13 (quoting Ex. 1011, 3:18–33); Ex. 1026 ¶¶ 296–297. Petitioner also argues "*some resistance* to coupler rotation is *necessary* to prevent the coupler from loosening after being fully tightened onto a port." Pet. Reply 13 (emphasis added) (citing Ex. 1027, 187:17–190:16); Ex. 1026 ¶ 297.

Patent Owner replies that although "conductive o-rings could be suitable for ***other applications*** that were ***not*** rotary seals and did ***not*** require free rotation," a person of ordinary skill in the art would not have modified Youtsey's rotary seal o-ring 84 to be conductive due to the higher compression required for conductivity. PO Sur-reply 12 (citing Ex. 1027, 90:8–20, 118:16–119:9); *id.* at 17–18 (citing Ex. 1027, 196:12–199:4, 200:10–202:18); *id.* at 28 (citing Ex. 1027, 97:18–102:1). Bell is not to the contrary, according to Patent Owner, because its "conductive o-ring 34 was designed to intentionally provide 'resistance to rotation' 'sufficient to ***prevent the outlet body from rotating under the weight of the cable*** so that

it remains in the desired position.'" *Id.* at 18–19 (citing PO Resp. 60–61; Ex. 1011, code (57), Figs. 1, 3, 3:18–34; Ex. 2041, 303:15–306:7; Ex. 2044, 446:20–450:16). Patent Owner further asserts that Petitioner mischaracterizes Dr. Eldering's testimony as "admitt[ing] that some resistance to coupler rotation is necessary to prevent the coupler from loosening after being fully tightened onto a port." *Id.* at 19 (citing Pet. Reply 13; Ex. 1027, 187:17–190:16).

We begin by rejecting Dr. Eldering's testimony that Youtsey's o-ring 84 is subject to a maximum compression of "much lower than 10%, and likely no more than 5%" to permit free rotation of coupler 30 around body 14. Ex. 2042 ¶ 260. Dr. Eldering cites "O-Ring Groove Design Guide & Basic Recommendations (available at https://www.allorings.com/o-ring-groove-design-considerations (last accessed Jan. 16, 2023))" (Ex. 2039, "allorings.com") in support. *See id.*; PO Resp. vii. The allorings.com reference begins by stating: "Our o-ring groove design guides list default o-ring groove dimensions for the most basic applications and are intended to be used with the following o-ring groove design considerations to engineer an o-ring gland to optimize specific application performance." Ex. 2039, 1. The allorings.com disclosure cited by Dr. Eldering is reproduced below.

O-Ring Squeeze Compression (O-Ring C/S) - Gland Depth / (O-Ring C/S)	▪ Face seal:20-30% ▪ Static Male/Female: 18-25% ▪ Reciprocating: 10-20% ▪ Rotary: 0-10%

Ex. 2042 ¶ 260. This is a table entry under the heading "O-Ring Material Properties," in a row entitled "O-Ring Squeeze Compression," with the phrase "Rotary: 0–10%" highlighted in yellow by Dr. Eldering.

Dr. Eldering does not explain persuasively how this disclosure leads to his conclusion that Youtsey's o-ring 84 must be subject to a maximum compression of *much lower* than 10%, and *no more* than 5%, to permit sufficient rotation of coupler 30 around body 14. *See* Ex. 2042 ¶ 260; Ex. 1027, 200:10–202:18. Given the lack of detail in allorings.com as to the "Rotary" environment(s) at issue there, we discern no meaningful connection between the o-rings at issue in allorings.com and Youtsey's o-ring 84 in a coaxial cable connector. Moreover, even assuming the respective o-ring environments are similar, allorings.com overlaps at or near its maximum 10% value with Peng's disclosure that sufficient conductivity for a shielding ground path can be achieved at "about 10%" compression (Ex. 2033, 4:19–22, 9:2–6) of a conductor-filled elastomeric o-ring, as discussed above. Further, also as discussed above, one of ordinary skill in the art would have known that a conductor-coated or a conductor-sheathed elastomeric o-ring may have been used to avoid the about 10% minimum compression required of a conductor-filled elastomeric o-ring.

We acknowledge that Youtsey's coupling portion 30 must be able to rotate around Youtsey's body portion 14 in order for the coupling portion to be threaded onto port 16. *See, e.g.*, Ex. 1007, Figs. 1, 3, 5:23–37. We also acknowledge that Youtsey's o-ring 84 is trapped between coupling portion 30 and body portion 14, to provide an environmental seal there, so it will frictionally resist the rotation. *See id.* at Fig. 3, 5:45–56. These competing design considerations are discussed by the Burris, Samchisen, and Bence disclosures summarized by Patent Owner, and are acknowledged by Dr. Dickens. *See* PO Resp. 52–55; Ex. 2041, 200:4–202:1.

Where we part ways from Patent Owner's position, however, is in the notion that modifying Youtsey's o-ring 84 to be conductive will decrease its compressibility by so much that it will become too difficult to rotate coupling portion 30 around body portion 14 to complete the threaded connection between coupling portion 30 and port 16. Dr. Dickens and Dr. Eldering agree that completing this connection involves at least some resistance to coupler rotation by o-ring 84, although Dr. Eldering quibbles over whether the resistance is large enough to prevent the coupler from loosening after the connector is fully tightened. *See* Ex. 1026 ¶ 297; Ex. 1027, 187:11–190:16 ("It creates drag that then impedes rotation, or works as a force that is — counterforce to the rotational force that some person is applying."). This, then, becomes a matter of degree rather than absolutes. And the only evidence proffered to support Dr. Eldering's testimony in this regard is allorings.com, which as discussed above has an uncertain applicability to the coaxial cable connectors at issue here, or if it does apply, then it supports Dr. Dickens's testimony that even a conductor-filled elastomeric o-ring would work in Youtsey.

As a further example, Bell provides conductive resilient o-ring 34, which both seals and provides a conductive pathway between plug body 12 and outlet body 22. *See* Ex. 1011, Fig. 1, 2:17–21, 3:16–18. O-ring 34 further "provid[es] a limited degree of frictional resistance to the relative rotation of" plug body 12 and outlet body 22. *Id.* at code (57), 2:46–51, 3:19–43. In particular, "some resistance to rotation is provided by the O-ring 34, which is in compression between the plug body 12 and the outlet body 22," wherein the "resistance is preferably sufficient to prevent the outlet body from rotating under the weight of the cable so that it remains in

the desired position." *Id.* at 3:29–35. Patent Owner points out correctly that Bell differs from Youtsey in that: (1) Bell's coupling is not a threaded connection like Youtsey's and (2) the purpose of the resistance is different—cable positioning in Bell, versus completing a threaded connection in Youtsey. Despite these differences, Bell establishes that the prior art includes at least one *o-ring* structure that was *conductive* to extend a shielding ground path, provided *environmental sealing*, and *permitted a desired rotation* of parts, all within *a coaxial cable connector*. It therefore tends to support Dr. Dickens's testimony that such an o-ring would have been useful in Youtsey, and to cut against Dr. Eldering's opposing testimony, despite the differences between Bell and Youtsey.

Lastly, we agree with Dr. Eldering's testimony that the *circle shaped* cross-section of Youtsey's o-ring 84 structure is different from the *flat sided* cross-sections of Lionetto's conductive elastomer 34 and Horak's rubber ring 18. *See supra* Section III.B.3.e.ii.(b); Ex. 1007, Fig. 3; Ex. 1008, Fig. 1; Ex. 1009, Figs. 2–3; Ex. 2042 ¶¶ 251–262. However, based on the complete record before us, we conclude this is an insignificant distinction. For reasons provided above, we do not agree with Dr. Eldering's testimony that adding a conductive filler / coating / sheath to Youtsey's o-ring 84 will result in the o-ring being unable to perform the dual functions of environmental sealing and completing a conductive pathway, without unduly inhibiting rotation of coupling portion 30 around body portion 14.

(e) Patent Owner's Third Disadvantage—Increased Cost

Patent Owner argues "conductive elastomers tend to be expensive as compared to other gasket materials," cutting against any motivation for

making Youtsey's o-ring 84 out of a conductive elastomer. PO Resp. 47–48 (quoting Ex. 2034 (Choudary), 1:61–63) (citing Ex. 2035 (Bunyan), 2:4–8, 2:22–43); Ex. 2042 ¶¶ 238–239. Patent Owner cites *Hynix Semiconductor Inc. v. Rambus Inc.*, 645 F.3d 1336, 1353 (Fed. Cir. 2011), as stating: "Lowering cost is a ubiquitous market demand, and the fact that a combination is expected to increase cost has some bearing on the obviousness of that combination." PO Resp. 47–48.

Petitioner replies that Patent Owner "provided no evidence to establish that replacing a nonconductive o-ring with a conductive o-ring would lead to the connector being 'expensive.'" Pet. Reply 24. Petitioner argues a person of ordinary skill in the art "would view any additional cost of using a conductive o-ring as minuscule compared to the benefits in RFI/EMI protection." *Id.* at 24–25 (citing Ex. 2041, 172:2–7; Inst. Dec. 66); Ex. 1026 ¶ 331 (citing Ex. 1028, 35).

We find Choudary pertinently states: "Another problem with EMI/RFI shielding gaskets is that conductive elastomers tend to be expensive as compared to other gasket materials," and "[i]t is desirable to provide a gasket that is inexpensive and simple to install." Ex. 2034, 1:62–65. We find Bunyan pertinently states: "The use of noble metal wires adds significantly to the cost of the gasket." Ex. 2035, 2:34–36.

No doubt, the cost of manufacture is a relevant consideration in determining motivation to combine. However, the present record is entirely silent as to *how much* using a conductive o-ring rather than a non-conductive o-ring in Youtsey would increase the cost of manufacture. Thus, the simple notion of being more expensive, without knowing any contours regarding the expense or increase in expense, provides minimal evidence in support of

Patent Owner's position. As discussed below, we find that the evidence as to the benefit achieved by Petitioner's proposed modification (i.e., a redundant grounding path) outweighs any disadvantage of increased cost.

(f) Analysis and Conclusion as to Motivation to Modify Youtsey

Having considered and balanced the prior art for all that it teaches, including disclosures that diverge from the invention at hand as well as disclosures that point towards the invention at hand, we find Petitioner's asserted motivation is supported by a preponderance of the evidence. *See Polaris Indus., Inc. v. Arctic Cat, Inc.*, 882 F.3d 1056, 1067–70 (Fed. Cir. 2018); *Winner Int'l Royalty Corp. v. Wang*, 202 F.3d 1340, 1349 & n.8 (Fed. Cir. 2000) (stating "the benefits, both lost and gained, should be weighed against one another" when assessing motivation to combine); *see also In re Urbanski*, 809 F.3d 1237, 1243–44 (Fed. Cir. 2016) (person of ordinary skill in the art may be motivated to pursue desirable properties of one prior art reference, even at the expense of foregoing a benefit taught by another prior art reference).

In particular, providing a redundant grounding path by modifying Youtsey's o-ring 84 to be conductive is a sufficiently articulated and rational motivation, based on a preponderance of the evidence including Lionetto and Horak, and avoids improper hindsight in Petitioner's proposed modification. *See supra* Section III.B.3.e.iv.(a). This modification might reduce the compressibility of the modified (conductive) o-ring versus Youtsey's existing (non-conductive) o-ring. However, the prior art reflects that a single elastomeric ring structure may be used to provide *both* a sufficient environmental seal *and* a sufficiently conductive pathway, as

needed in the context of a coaxial cable connector. *See supra* Section III.B.3.e.iii.(c). Also, the evidence does not support Patent Owner's contention that modifying Youtsey's o-ring 84 to be conductive will decrease its compressibility by so much that it will become too difficult to rotate coupling portion 30 around body portion 14 to complete the threaded connection between coupling portion 30 and port 16. *See supra* Section III.B.3.e.iv.(d). The evidence instead establishes: (1) a conductor-filled o-ring could provide the requisite conductivity at about 10% compression, which would also allow relative rotation between Youtsey's coupling portion and body portion; and (2) a conductor-coated or a conductor-sheathed o-ring may exhibit the requisite conductivity without requiring any more compression than what would be provided by a non-conductive o-ring. *See id.* Finally, although Petitioner's proposed modification would increase the cost of manufacture of Youtsey's device, there is no evidence in the record to suggest that this increase would be so significant so as to lead away from achieving the benefit of the modification. *See supra* Section III.B.3.e.iv.(e).

Having resolved the question of motivation to combine in Petitioner's favor, we now turn to the issue of reasonable expectation of success.

v. Reasonable Expectation of Success

Petitioner contends a person of ordinary skill in the art "would have had a reasonable expectation of success in implementing Youtsey with [a] conductive, compressible o-ring[] [84]." Pet. 18–19 (citing Ex. 1005 ¶¶ 64–66). Petitioner asserts "Lionetto and Horak show this was a known technique for improving coaxial cable connectors in the same way [and] [t]hey also show that using such o-rings would yield the predictable result of

sealing against both moisture and RFI at the same time." *Id.* at 18–19 (citing Ex. 1005 ¶¶ 64, 66). Petitioner further asserts "[t]he '983 patent confirms this was well within a [person of ordinary skill in the art]'s knowledge and skill," because "[i]t provides a similar level of implementation detail regarding the o-rings in its structurally similar connector and shows that determining a workable material for the o-rings was a matter of routine experimentation." *Id.* at 19 (citing Ex. 1001, 11:29–42, 11:47–53; Ex. 1005 ¶¶ 65–66).

Patent Owner responds that Petitioner has not established a reasonable expectation of success. *See* PO Resp. 68–69 (citing Ex. 2042 ¶¶ 292–295). This argument is premised on Patent Owner's allegations of "the significant disadvantages that would result from" Petitioner's modification, as discussed in Section III.B.3.e.iv above. *Id.* Patent Owner also asserts Petitioner incorrectly suggests that "Lionetto and Horak show [a conductive, compressible o-ring] was a known technique for improving coaxial cable connectors in the ***same way***" as Youtsey's o-ring 84 is used, also as discussed above. *Id.* at 69.

Petitioner replies that a person of ordinary skill in the art "would have had at least a reasonable expectation of success," due to "the prior art's consistent teaching of improving a coaxial cable by using a conductive o-ring to shield from both moisture and RFI." Pet. Reply 18 (citing Pet. 18–19, 62–63). Petitioner also asserts that each of Patent Owner's alleged disadvantages to conductive o-rings is "either false or irrelevant" for reasons provided above. *Id.* at 18–19.

Thus, the parties' arguments directed to reasonable expectation of success essentially re-hash arguments we have already considered above in

the context of motivation to combine. For the reasons provided above, we resolve these disputes in Petitioner's favor. We also emphasize that the prior art of record, taken as a whole, demonstrates a wide array of solutions providing a shielding ground path through a coaxial cable connector, demonstrating the relative ease of implementing various design choices in this respect. The solutions include providing conductive elastomeric members of various compositions and structural configurations to maintain the grounding path.

Having resolved the disputed issues as to reasonable expectation of success in Petitioner's favor, we now turn to the issue of objective indicia of nonobviousness.

vi. Objective Indicia of Nonobviousness

Patent Owner asserts that two objective indicia of nonobviousness confirm that claim 1[16] would not have been obvious. *See* PO Resp. 2, 70–73.

<u>Proceeding Contrary to Conventional Wisdom</u>

Patent Owner argues the invention of claim 1 "proceeded contrary to conventional wisdom by creating an alternative coupler-body grounding path," which "is 'strong evidence of unobviousness.'" PO Resp. 2, 70 (quoting *Ruiz v. A.B. Chance Co.*, 234 F.3d 654, 668 (Fed. Cir. 2000)) (citing *Panduit Corp. v. Dennison Mfg. Co.*, 774 F.2d 1082, 1099 (Fed.

[16] Patent Owner refers to the coupler-body grounding limitations of the Challenged Claims (*see, e.g.*, PO Resp. 2), but we focus on claim 1 here with the understanding that this discussion also applies to the other claims challenged in this proceeding.

Cir. 1985)[17]). This argument is premised on Patent Owner's allegation, discussed above in Section III.B.3.e.iii, that "prior art solutions to shielding problems placed grounding members in contact with the ***post***, ***not the body***." PO Resp. 70; PO Sur-reply 3–4.

Petitioner replies that Patent Owner here "merely repackages" arguments we have already addressed above. Pet. Reply 19. Further: "Notably missing is any evidence of unexpected results, commercial success, long-felt but unsolved need, failure of others, skepticism of experts, or copying." *Id.*

As discussed above in Section III.B.3.e.iii, the evidence does not support Patent Owner's contention that the prior art is limited to using a post, and leads away from using a body portion, to extend the grounding shield through a coaxial cable connector. The prior art instead discloses that different grounding paths may be provided through a coaxial cable connector, using different structures in the connector, some of which do not include a post. Further, Patent Owner does not point to any prior art disclosures that might suggest a post is a critical component of a grounding shield path, or that a post is better than any particular other connector component(s) in this regard, including a body.

The Federal Circuit decisions cited by Patent Owner are distinguished from this case. In *Ruiz*, "one of the inventors of the prior art . . . had

---

[17] This decision was vacated by the Supreme Court in *Dennison Mfg. Co. v. Panduit Corp.*, 475 U.S. 809 (1986), on the basis that the Federal Circuit "did not mention [Fed. R. Civ. P.] 52(a), did not explicitly apply the clearly-erroneous standard to any of the District Court's findings on obviousness, and did not explain why, if it was of that view, Rule 52(a) had no applicability to this issue." *Id.* at 811.

expressed skepticism that [the patent owner's] prototype model offered advantages over the concrete haunch method." *Ruiz*, 234 F.3d at 668. There is no evidence of skepticism in this case. The *Panduit* decision turned on evidence of "outstanding commercial success," with the patent owner's cable tie product "becoming, early on, the unquestioned leading tie on the market" only after "many others . . . tried for years and failed to create a superior cable tie." *Panduit*, 774 F.2d at 1099. There is no evidence of commercial success or failure of others in this case.

For these reasons, Patent Owner's first objective indicia argument is unavailing.

Petitioner's Patent Application

Patent Owner argues that Petitioner, in its own U.S. Patent Application No. 13/530,831 (*see* Ex. 2013, "the '831 Application") filed several years after the '983 patent's priority date, took positions contrary to and belying Petitioner's positions in this proceeding. *See* PO Resp. 2, 71–73. In particular, according to Patent Owner, the '831 Application "included claims directed to the same coupler-body grounding member/path limitations at issue here," demonstrating that "***five of Petitioner's own inventors*** (*i.e.*, [persons of ordinary skill in the art]) understood that a coupler-body grounding member/path was patentable." *Id.* (citing Ex. 2013, code (57), Figs. 4, 5, ¶¶ 3, 5, 14, 18, claim 1; Ex. 2014, 4:6–14; Ex. 2015, 3–6; Ex. 2016, 2); PO Sur-reply 3; Ex. 2001 ¶¶ 190–199. Patent Owner cites *Andersen Corp. v. Pella Corp.*, 300 F. App'x 893, 899–900 (Fed. Cir. 2008), as "finding statements made in the accused infringer's own patent applications provided objective evidence that the challenged claims were not obvious." PO Resp. 73.

Petitioner in reply points out that the original claims of the ’831 Application were rejected by the Examiner, and the claims were not allowed until they were amended “to require the grounding member to be ‘exposed outside of the connector body,’ supporting that other features attribute to the non-obviousness of [Petitioner’s] claimed invention.” Pet. Reply 19–20; *see* Ex. 2014, 3:35–4:15 (issued claim 1 from the ’831 Application). Petitioner distinguishes the *Andersen* decision cited by Patent Owner as involving “long-felt need, the failure of others, unexpected results, copying, and praise by others,” none of which are present here. Pet. Reply 20.

Patent Owner replies that the Examiner’s rejection in the ’831 Application “fails to change the fact that Petitioner’s own inventors thought that the original claims were nonobvious.” PO Sur-reply 3. Patent Owner additionally notes that the “rejection was based on a parent patent to the ’983 [p]atent,” which Patent Owner argues “confirm[s] that Petitioner’s inventors were trying to patent the same claimed invention believing it to be patentable.” *Id.* (citing Ex. 2015, 4–5).

We conclude that, even assuming the original claims of the ’831 Application are substantially identical to claim 1 of the ’983 patent at issue here, this provides only very little objective evidence of nonobviousness. It may very well be that Petitioner and these inventors believed that the original claims were patentable, in a generic sense. The issue presented here, however, is whether claim 1 would have been obvious in view of specific teachings in Youtsey, Lionetto, Horak, and specific knowledge of a person of ordinary skill in the art as demonstrated by other references discussed above. Petitioner’s view on that issue is expressed in

the Petition and Petitioner's Reply. The '831 Application inventors' view on that issue is not reflected in the record before us.

vii. Weighing of Evidence and Conclusion as to Obviousness

Youtsey anticipates the claimed invention except that its sealing o-ring 84 is not disclosed as being conductive, and Lionetto and Horak together with the knowledge of a person of ordinary skill in the art provide a motivation to modify Youtsey's o-ring 84 to be conductive (i.e., adding a redundant grounding path). Further, even assuming the original claims of Petitioner's '831 Application are substantially identical to claim 1 of the '983 patent at issue here, this provides only very little objective evidence of nonobviousness in light of the specific challenge by Petitioner. On balance, weighing the entirety of the evidence and argument presented by the parties, we conclude Petitioner has shown by a preponderance of the evidence that claim 1 of the '983 patent is unpatentable as having been obvious over Youtsey, Lionetto, and Horak.

f. Collateral Estoppel

Petitioner argues Patent Owner is estopped from arguing claim 1 is not unpatentable over Youtsey, Lionetto, and Horak, based on a prior PTAB decision entered during reexamination of U.S. Patent No. 7,833,053, which is related to the '983 patent. *See* Pet. 1, 5–8, 19–23; Pet. Reply 1, 25–29. Petitioner relies on common law collateral estoppel, and on 37 C.F.R. § 42.73(d)(3). *See* Pet. 19–23. Patent Owner argues collateral estoppel and Rule 42.73(d)(3) do not apply here. *See* PO Resp. 3, 73–80; PO Sur-reply 29.

Petitioner states "the Board need not reach the [estoppel] issue if the challenged claims are found unpatentable" on the merits of the evidence presented here. Pet. Reply 1; Tr. 9:21–10:19. Accordingly, we do not rely on any sort of estoppel as a basis for ruling in Petitioner's favor in this Decision.

g. Conclusion as to Claim 1

For the reasons discussed above, we conclude that Youtsey, Lionetto, and Horak would have rendered the subject matter of claim 1 obvious to one of ordinary skill in the art at the time of the invention.[18]

4. Claims 2–5, 8–15, and 18

Independent claim 9 is directed to a "connector" with similar structure as the connector recited by claim 1. Claims 2–5 and 8 depend, directly or indirectly, from claim 1. Claims 10–15 and 18 depend, directly or indirectly, from claim 9. Petitioner provides a detailed analysis of each of these claims with argument and evidence in support thereof. *See* Pet. 38–56.

Patent Owner's argument regarding element 1[d] applies equally to element [d] of claim 9, which also recites a "conductive grounding portion." Patent Owner, however, does not raise any arguments directed specifically to claims 2–5, 8–15, and 18 aside from the arguments we addressed in our discussion of claim 1. *See generally* PO Resp.

For the reasons explained above in our analysis of claim 1, including our consideration and weighing of Patent Owner's objective evidence of nonobviousness, we conclude Patent Owner's arguments are unavailing. We

[18] Our determination is made without reaching the issue of collateral estoppel.

adopt Petitioner's argument and evidence directed to claims 2–5, 8–15, and 18 as our own in this Decision. Accordingly, we conclude that Youtsey, Lionetto, and Horak would have rendered the subject matter of claims 2–5, 8–15, and 18 obvious to one of ordinary skill in the art at the time of the invention.

C. Obviousness over Tarrant and Bell

Petitioner asserts the combination of Tarrant and Bell would have rendered the subject matter of claims 1–5, 8–15, and 18 obvious to one of ordinary skill in the art at the time of the invention. Pet. 56–85. Patent Owner contests Petitioner's assertion. *See generally* PO Resp.

Because we have determined above that Petitioner has established the unpatentability of these same claims based on the combination of Youtsey, Lionetto, and Horak, we need not and do not reach this second challenge by Petitioner based on the combination of Tarrant and Bell.

IV. SUMMARY

For the reasons discussed above, Petitioner has demonstrated, by a preponderance of the evidence, that claims 1–5, 8–15, and 18 of the '983 patent are unpatentable.

Our conclusions regarding the Challenged Claims are summarized below:

Claims Challenged	35 U.S.C. §	Reference(s) /Basis	Claims Shown Unpatentable	Claims Not Shown Unpatentable
1–5, 8–15, 18	103(a)	Youtsey, Lionetto, Horak	1–5, 8–15, 18	

Claims Challenged	35 U.S.C. §	Reference(s) /Basis	Claims Shown Unpatentable	Claims Not Shown Unpatentable
1–5, 8–15, 18	103(a)	Tarrant, Bell[19]		
Overall Outcome			1–5, 8–15, 18	

V. ORDER

In consideration of the foregoing, it is:

ORDERED that claims 1–5, 8–15, and 18 of U.S. Patent No. 10,466,983 B2 are determined to be unpatentable; and

FURTHER ORDERED that, because this a Final Written Decision, parties to this proceeding seeking judicial review of this Decision must comply with the notice and service requirements of 37 C.F.R. § 90.2.

[19] For the reasons explained above, we do not reach this alternative ground because we determine that claims 1–5, 8–15, and 18 are unpatentable based on Petitioner's first ground.

For PETITIONER:

Giri Pathmanaban
Jonathan M. Strang
Richard G. Frenkel
Richard A. Lowry
LATHAM & WATKINS LLP
giri.pathmanaban@lw.com
jonathan.strang@lw.com
rick.frenkel@lw.com
richard.lowry@lw.com

For PATENT OWNER:

Denis J. Sullivan
Naresh K. Kannan
BARCLAY DAMON, LLP
dsullivan@barclaydamon.com
nkannon@barclaydamon.com

Cory C. Bell
FINNEGAN, HENDERSON, FARABOW,
GARRETT & DUNNER LLP
cory.bell@finnegan.com