Trials@uspto.gov
571-272-7822

Paper 10
Date: November 1, 2022

UNITED STATES PATENT AND TRADEMARK OFFICE

BEFORE THE PATENT TRIAL AND APPEAL BOARD

MICROSOFT CORPORATION,
Petitioner,

v.

THROUGHPUTER, INC.,
Patent Owner.

IPR2022-00757
Patent 10,963,306 B2

Before MICHAEL R. ZECHER, JOHN A. HUDALLA, and MATTHEW S. MEYERS, *Administrative Patent Judges.*

MEYERS, *Administrative Patent Judge*.

DECISION
Denying Institution of *Inter Partes* Review
35 U.S.C. § 314

I. INTRODUCTION

A. Background and Summary

Microsoft Corporation ("Petitioner") filed a Petition requesting to institute an *inter partes* review of claims 1–24 (the "challenged claims") of U.S. Patent No. 10,963,306 B2 (Ex. 1001, the "'306 patent"). Paper 2 ("Petition" or "Pet."). ThroughPuter, Inc. ("Patent Owner") filed a Preliminary Response. Paper 8 ("Preliminary Response" or "Prelim. Resp.").

An *inter partes* review may not be instituted "unless . . . the information presented in the petition . . . shows that there is a reasonable likelihood that the petitioner would prevail with respect to at least 1 of the claims challenged in the petition." 35 U.S.C. § 314(a) (2018). We have authority, acting on the designation of the Director, to determine whether to institute an *inter partes* review under 35 U.S.C. § 314 and 37 C.F.R. § 42.4(a). Having considered the arguments and evidence presented by Petitioner and Patent Owner, we exercise our discretion to deny institution of *inter partes* review under 35 U.S.C. § 325(d).

B. Real Parties in Interest

The parties identify themselves as the real parties in interest. Pet. 76; Paper 4 (Patent Owner's Mandatory Notices), 2.

C. Related Proceedings

The parties identify, as matters involving or related to the '306 patent, *ThroughPuter, Inc. v. Microsoft Corporation*, No. 1:21-cv-00397 (E.D. Va.), which Patent Owner indicates was transferred to the U.S. District Court for the Western District of Washington as No. 2:22-cv-00344 ("the parallel district court litigation"). Pet. 76; Paper 4, 2. Patent Owner further indicates

that the parallel district court litigation "has been stayed pending resolution of the present *inter partes* review proceeding." Paper 9 (Patent Owner's Updated Mandatory Notices), 2.

We also note that Petitioner has challenged other patents owned by Patent Owner in IPR2022-00527, IPR2022-00528, IPR2022-00574, and IPR2022-00758.

D. The '306 Patent

The '306 patent is titled "Managing Resource Sharing in a Multi-Core Data Processing Fabric." Ex. 1001, code (54). The '306 patent relates to providing "an extensible, multi-stage, application program load adaptive, parallel data processing architecture shared dynamically among a set of application software programs according to processing load variations of said programs." *Id.* at 3:26–30.

Figure 1, reproduced below, shows "a multi-stage manycore processor system architecture, comprising a set of application processing load adaptive manycore processing stages interconnected by a packet destination app-task-inst controlled cross connect." Ex. 1001, 8:44–48.

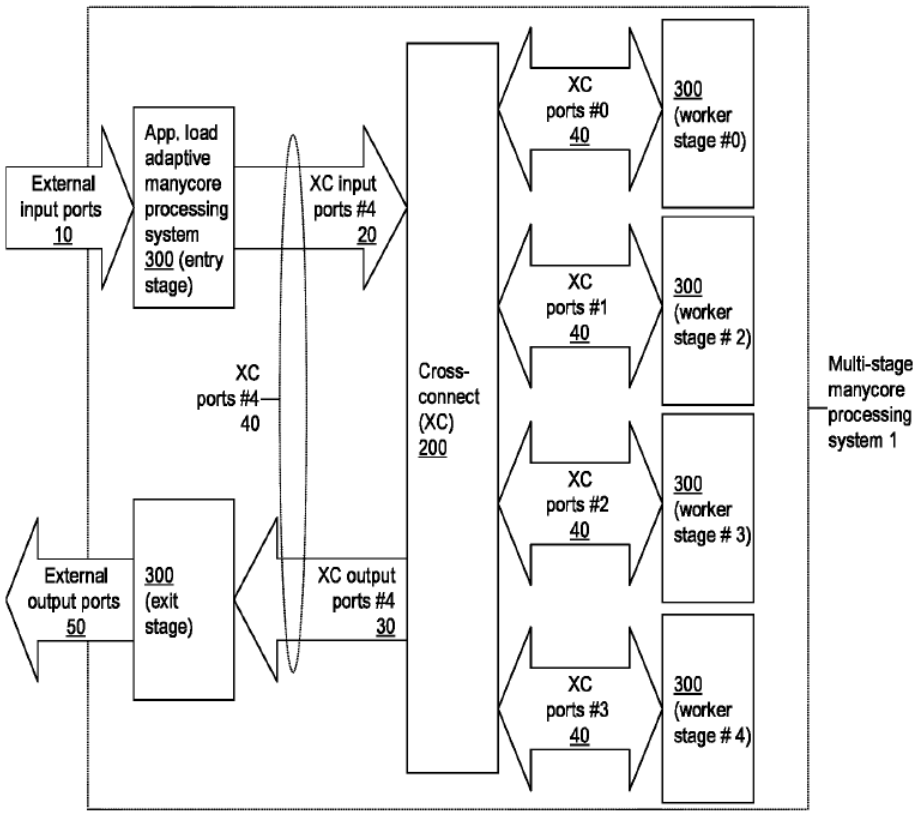

FIG. 1

As shown in Figure 1, system 1 "may have any practical number of" processing stages 300 and cross connect ports 40 connecting stages 300 to cross connect 200. *Id.* at 8:50–54. Each stage 300 includes a manycore processor system 500 (*id.* at 12:30–32), an example of which is illustrated in Figure 5.

Figure 5, reproduced below, shows "a functional block diagram for the manycore processor system 500 dynamically shared among instances of the locally hosted application program tasks, with capabilities for application processing load adaptive allocation of the cores among the applications." Ex. 1001, 14:61–66.

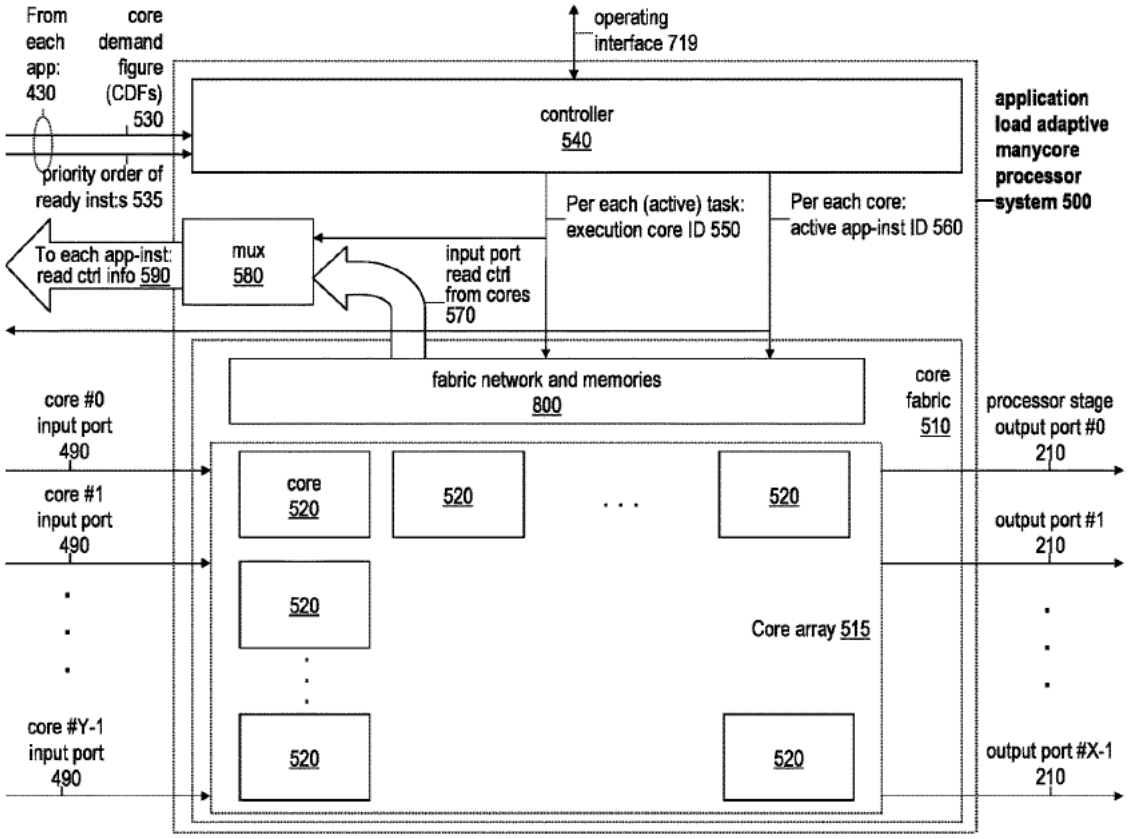

FIG. 5

As shown in Figure 5, "the processor system 500 comprises an array 515 of processing cores 520, which are dynamically shared among [] the locally hosted tasks of a set of application programs." *Id.* at 15:12–15. Each of cores 520 may be any kind of software program processing hardware resource, including "central processing units (CPUs), graphics processing units (GPUs), digital signal processors (DSPs) or application specific processors (ASPs) etc." *Id.* at 15:4–8. In addition, "in programmable logic (FPGA) implementation, the core type . . . is furthermore reconfigurable." *Id.* at 15:8–10. "A hardware logic based controller module 540 within the

processor system 500, through a periodic process, allocates and assigns the cores 520 of the processor 500 among the set of applications 610 (FIG. 6) and their instances," based on core-demand figures (CDFs), which express how many cores 520 an application's "associated app-task is presently able [to] utilize for its ready to execute instances." *Id.* at 15:19–22, 15:33–37.

Figure 6, reproduced below, shows the process "performed by the controller logic 540 of the system 500, repeatedly selecting and placing the to-be-executing instances 640 of the set of locally hosted app-tasks 610 to their assigned target cores 520 within the array 515." Ex. 1001, 16:5–10.

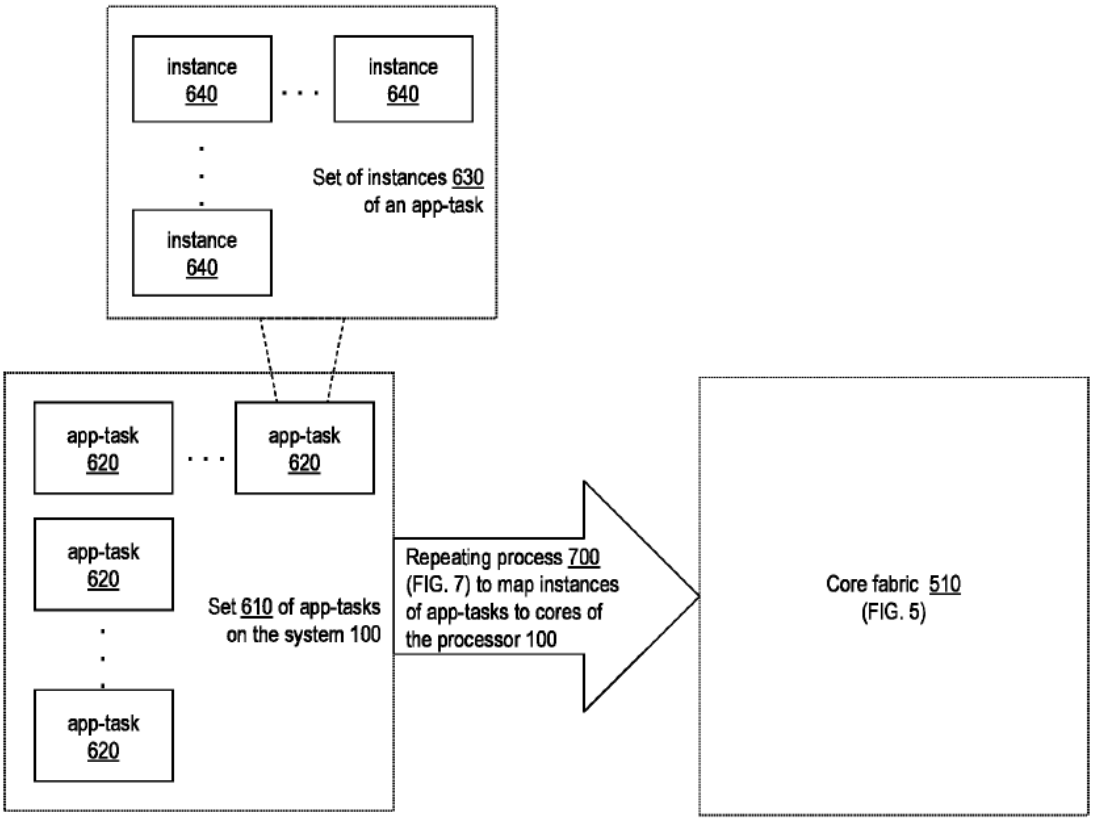

FIG. 6

As shown in Figure 6, for a given set of app-tasks 610, "each individual app-task 620 configured for a system 500 has its collection 630 of its instances 640." *Id.* at 16:14–18. For isolation among the app-tasks 620, hardware controller 540 in each processor system 500 inserts an application ID for data packets passed to cross connect 200. *Id.* at 9:26–33. This way, "the tasks of any given application running on the processing stages 300 in a system 1 can trust that the packets they received from the XC 200 are from its own application." *Id.* at 9:33–36.

E. Illustrative Claim

Petitioner challenges claims 1–24 of the '306 patent. Pet. 1. Claims 1 and 12 are independent. Claim 1, reproduced below with Petitioner's bracketing, is representative.

> 1. [1.0] A method for task-switching on a multi-user parallel processing hardware architecture comprising a plurality of reconfigurable logic-based processing units, the method comprising:
>
> [1.1] linking, through a first set of inter-task communication paths of the multi-user parallel processing hardware architecture, a first set of reconfigurable logic-based processing units of the plurality of reconfigurable logic-based processing units into a first multi-stage program instance configured to execute a corresponding set of interdependent processing stages of a first program, [1.2] wherein each of the first set of reconfigurable logic-based processing units is programmed to perform a respective task of a plurality of first tasks of the first program corresponding to a respective processing stage of the first multi-stage program instance;
>
> [1.3] linking, through a second set of inter-task communication paths of the multi-user parallel processing hardware architecture, a second set of reconfigurable logic-based processing units of the plurality of reconfigurable logic-based processing units into a second

multi-stage program instance configured to execute a corresponding set of interdependent processing stages of a second program, [1.4] wherein each of the second set of reconfigurable logic-based processing units is programmed to perform a respective task of a plurality of second tasks of the second program corresponding to a respective processing stage of the second multi-stage program instance;

[1.5] maintaining, in a storage, a first location for a first reconfigurable logic-based processing unit of the first set of reconfigurable logic-based processing units executing the first multi-stage program instance such that a first one or more users and/or programs are enabled to communicate directly with the first multi-stage program instance;

[1.6] maintaining, in the storage, a second location for a second reconfigurable logic-based processing unit of the second set of reconfigurable logic-based processing units executing the second multi-stage program instance such that a second one or more users and/or programs are enabled to communicate directly with the second multi-stage program instance; and

[1.7] in response to an increased demand for the second program, reallocating, by a controller comprising software and/or hardware logic configured to implement a load-adaptive allocation policy, at least one processing unit of the first set of reconfigurable logic-based processing units, the reallocating resulting in

[1.8] (1) switching the at least one of the first set of processing units from performing a task of the plurality of first tasks to performing one task of the plurality of second tasks, wherein switching comprises matching a first programming configuration of the at least one of the first set of processing units to a programming configuration demanded by the one task, and

[1.9] (2) adjusting, in storage, at least one of the first location or the second location to enable, through the respective location, direct communication to the other multi-stage program instance of the first multi-stage

program instance or the second multi-stage program instance;

[1.10] wherein the load-adaptive allocation policy is configured to facilitate minimizing reconfiguring the plurality of reconfigurable logic-based processing units.

Ex. 1001, 29:2–67; Pet vi–vii.

F. Prior Art and Asserted Grounds

Petitioner asserts that claims 1–24 of the '306 patent are unpatentable based on the following grounds (Pet. 1–2):

Claims Challenged	35 U.S.C. §[1]	References
1–24	103(a)	Nollet[2], Tuan[3], Miller[4]
1–24	103(a)	Nollet, Tuan, Miller, Redaelli[5]

Petitioner also relies on the Declaration of Dr. Henry H. Houh (Ex. 1003, "the Houh Declaration") in support of its arguments.

II. ANALYSIS

As discussed in greater detail below, we will be exercising our discretion to deny institution of an *inter partes* review pursuant to 35 U.S.C. § 325(d). Accordingly, we need not discuss in depth the merits of

---

[1] The Leahy-Smith America Invents Act, Pub. L. No. 112-29, 125 Stat. 284 (2011) ("AIA"), amended 35 U.S.C. § 103. Because the '306 patent is alleged to have an effective filing date before the effective date of the applicable AIA amendments, we refer to the pre-AIA version of 35 U.S.C. § 103.

[2] US 2009/0187756 A1, published July 23, 2009 (Ex. 1004, "Nollet").

[3] Vu Manh Tuan, "A Study on a Multitasking Environment for Dynamically Reconfigurable Processors" (2009) (Ex. 1005, "Tuan").

[4] US 8,296,434 B1, issued Oct. 23, 2012 (Ex. 1006, "Miller").

[5] Francesco Redaelli et al., "Reconfiguration Aware Task Scheduling for Multi-FPGA Systems," Proceedings of 4th HiPEAC Workshop on Reconfigurable Computing, Jan. 23, 2010 (Ex. 1007, "Redaelli").

Petitioner's obviousness challenges. Nevertheless, to the extent the definition of a person of ordinary skill in the art or claim construction is relevant to this proceeding, we address them below. We further note that the parties' arguments with respect to § 325(d) substantially relate to the asserted references, and so we provide brief overviews of Nollet, Tuan, Miller, and Redaelli to provide context for those arguments.

A. Level of Ordinary Skill in the Art

In determining the level of ordinary skill in the art, various factors may be considered, including the "type of problems encountered in the art; prior art solutions to those problems; rapidity with which innovations are made; sophistication of the technology; and educational level of active workers in the field." *In re GPAC Inc.*, 57 F.3d 1573, 1579 (Fed. Cir. 1995) (internal quotation marks and citation omitted).

Petitioner asserts that, at the time of the invention, a person of ordinary skill in the art "would have had at least a combination of a Bachelor's Degree (or a similar Master's Degree, or higher degree) in an academic area emphasizing computer science, or a related field, and two or more years of work experience with parallel processing technologies," but that "[a]dditional education or industry experience may compensate for a deficit in one of the other aspects of the requirements." Pet. 17 (citing Ex. 1003 ¶ 21). Patent Owner does not provide its own assessment regarding the level of skill in the art, or otherwise dispute Petitioner's assertion. *See* Prelim. Resp.

Based on our review of the record at this stage, we find that Petitioner's proposal is consistent with the level of skill reflected in the '306 patent and the prior art references of record. *See Daiichi Sankyo Co. v.*

Apotex, Inc., 501 F.3d 1254, 1256 (Fed. Cir. 2007) (listing the type of problems encountered in the art, prior art solutions to those problems, and the sophistication of the technology as factors that may be considered in determining the level of ordinary skill in the art). The prior art itself may be sufficient to demonstrate the level of skill in the art at the time of the invention. *See Okajima v. Bourdeau*, 261 F.3d 1350, 1355 (Fed. Cir. 2001) (explaining that specific findings regarding ordinary skill level are not required "where the prior art itself reflects an appropriate level and a need for testimony is not shown") (quoting *Litton Indus. Prods., Inc. v. Solid State Sys. Corp.*, 755 F.2d 158, 163 (Fed. Cir. 1985)).

Accordingly, for purposes of this Decision, we adopt Petitioner's definition of the level of ordinary skill in the art.

B. Claim Construction

In an *inter partes* review, we construe patent claims using the same claim construction standard that would be used to construe the claim in a civil action under 35 U.S.C. § 282(b). 37 C.F.R. § 42.100(b) (2019). This rule adopts the same claim construction standard used by Article III federal courts, which follow *Phillips v. AWH Corp.*, 415 F.3d 1303 (Fed. Cir. 2005) (*en banc*), and its progeny. Under that standard, the words of a claim are generally given their "ordinary and customary meaning," which is the meaning the term would have to a person of ordinary skill at the time of the invention, in the context of the entire patent including the specification. *See Phillips*, 415 F.3d at 1312–13. "If a petitioner believes that a claim term requires an express construction, the petitioner must include a statement identifying a proposed construction of the particular term and where the

intrinsic and/or extrinsic evidence supports that meaning." Consolidated Trial Practice Guide,[6] 44.

Petitioner "submits that constructions for claims terms are presently unnecessary to resolve issues of controversy" in the asserted grounds. Pet. 17. Patent Owner does not address claim construction. *See* Prelim. Resp.

We determine, at this stage, that no explicit construction of any terms is needed to resolve the issues presented by the arguments and evidence of record to reach a decision on institution. *See Realtime Data, LLC v. Iancu*, 912 F.3d 1368, 1375 (Fed. Cir. 2019) ("The Board is required to construe 'only those terms . . . that are in controversy, and only to the extent necessary to resolve the controversy.'") (quoting *Vivid Techs., Inc. v. Am. Sci. & Eng'g, Inc.*, 200 F.3d 795, 803 (Fed. Cir. 1999)).

C. Overview of Nollet, Tuan, Miller, and Redaelli

1. Nollet (Ex. 1004)

Nollet is a U.S. Patent Application Publication titled "System and Method for Hardware-Software Multitasking on a Reconfigurable Computing Platform." Ex. 1004, code (54). Nollet relates to "multitasking computing systems and methods adapted for reconfigurable computing platforms as well as reconfigurable hardware devices and software." *Id.* ¶ 3. In particular, Nollet describes "a "reconfigurable hardware device [that] can be a logic gate array, e.g. a Field Programmable Gate Array (FPGA)," in which reconfiguration "means changing the configuration or function of the logic blocks and/or the interconnection between the configurable logic blocks." *Id.* ¶ 57.

---

[6] *Available at* https://www.uspto.gov/TrialPracticeGuideConsolidated.

2. Tuan (Ex. 1005)

Tuan is a dissertation titled "A Study on a Multitasking Environment for Dynamically Reconfigurable Processors." Ex. 1005, 1. Tuan "investigate[s] a suitable architecture based on feasible mechanisms for developing a true multitasking environment on dynamically reconfigurable processing arrays (DRPAs)." *Id.* at 14. Tuan states that "[m]ultitasking aims at providing an appropriate mechanism to allow multiple applications to efficiently share a piece of reconfigurable hardware." *Id.* at 16.

3. Miller (Ex. 1006)

Miller is a U.S. Patent titled "Providing Dynamically Scaling Computing Load Balancing." Ex. 1006, code (54). Miller relates to providing "load balancing functionality [that] includes dynamically scaling a group of multiple computing nodes for which the load balancing is performed, such as to dynamically expand and/or shrink the quantity of computing nodes in the group based on predefined criteria." *Id.* at code (57).

4. Redaelli (Ex. 1007)

Redaelli is a paper titled "Reconfiguration Aware Task Scheduling for Multi-FPGA Systems." Ex. 1007, 57[7]. Redaelli relates to "a design framework to help guide dynamic decisions about sharing the computational environment and task placement in partially and dynamically reconfigurable FPGA clusters deployed for data intensive high performance computing applications." *Id.*, Abstract.

---

[7] Exhibit 1004 has no original page numbers in the filed version. We rely on the page numbers inserted by Petitioner in the bottom, middle portion of each page in Exhibit 1007.

D. Discretion under 35 U.S.C. § 325(d)

1. Framework

"In determining whether to institute or order [an *inter partes* review], the Director may take into account whether, and reject the petition or request because, the same or substantially the same prior art or arguments previously were presented to the Office." 35 U.S.C. § 325(d). The Director has delegated that discretion to the Board. 37 C.F.R. § 42.4(a).

In *Advanced Bionics, LLC v. MED-EL Elektromedizinische Geräte GmbH*, IPR2019-01469, Paper 6 (PTAB Feb. 13, 2020) (precedential) ("*Advanced Bionics*"), the Board applied a two-part framework in considering whether to exercise discretion to deny institution under § 325(d): "(1) whether the same or substantially the same art previously was presented to the Office or whether the same or substantially the same arguments previously were presented to the Office; and (2) if either condition of first part of the framework is satisfied, whether the petitioner has demonstrated that the Office erred in a manner material to the patentability of challenged claims." *Advanced Bionics*, Paper 6 at 8.

Within this two-part framework, the Board considers a number of non-exclusive factors in evaluating whether to exercise its discretion under § 325(d). *See Becton, Dickinson & Co. v. B. Braun Melsungen AG*, IPR2017-01586, Paper 8 (PTAB Dec. 15, 2017) (precedential as to § III.C.5, first para.) ("*Becton, Dickinson*"); *see also Advanced Bionics*, Paper 6 at 9–11. The factors set forth in *Becton, Dickinson* are as follows:

> (a) the similarities and material differences between the asserted art and the prior art involved during examination;
>
> (b) the cumulative nature of the asserted art and the prior art evaluated during examination;

> (c) the extent to which the asserted art was evaluated during examination, including whether the prior art was the basis for rejection;
>
> (d) the extent of the overlap between the arguments made during examination and the manner in which petitioner relies on the prior art;
>
> (e) whether petitioner has pointed out sufficiently how the examiner erred in its evaluation of the asserted prior art; and
>
> (f) the extent to which additional evidence and facts presented in the petition warrant reconsideration of the prior art or arguments.

Becton, Dickinson, Paper 8 at 17–18.

Factors (a), (b), and (d) of the *Becton, Dickinson* factors relate to whether the art or arguments presented in the Petition are the same or substantially the same as the art or arguments previously presented to the Office. *Advanced Bionics*, Paper 6 at 10. Factors (c), (e), and (f) "relate to whether the petitioner has demonstrated a material error by the Office" in its prior consideration of previously presented art or arguments. *Id.* Only if the same or substantially the same art or arguments previously were presented to the Office do we then consider whether the petitioner has demonstrated a material error by the Office. *Id.* "At bottom, this framework reflects a commitment to defer to previous Office evaluations of the evidence of record unless material error is shown." *Id.* at 9.

2. Petitioner's Obviousness Challenges

As set forth in section I.F above, Petitioner contends that the challenged claims are unpatentable over the combination of Nollet, Tuan, and Miller, either alone or in further combination with Redaelli. Pet. 1–2. Petitioner primarily relies on Nollet, or Nollet in view of the knowledge of one of ordinary skill in the art, to teach each limitation of independent

claims 1 and 12, and relies on Tuan, Miller, or Redaelli in the alternative to teach certain limitations. *See* Pet. 38–60, 67–72.

Petitioner acknowledges that Nollet was considered during prosecution, but contends that "Nollet is presently advanced in combination with newly cited references—Tuan, Miller, and Redaelli, which teach features added in the Examiner's Amendment that led to allowance—that the Office never considered when allowing the '306 patent to issue." *Id.* at 5. Petitioner further contends that "the new disclosures of Tuan, Miller, and Redaelli are materially different from [the prior] art relied upon by the Examiner." *Id.* at 6. For instance, Petitioner asserts that "[t]he Petition relies on Redaelli, *e.g.*, for element [1.10], which was added by Examiner's Amendment in the Notice of Allowance, and thus teaches a limitation that the Office previously determined not to be present in the prior art, individually or collectively." *Id.* at 5. Petitioner also contends that "the Office did not consider the prior art combinations being advanced in the Petition, and therefore, there is no overlap between the arguments made during examination and in the Petition." *Id.* at 7. Accordingly, under part one of the *Advanced Bionics* framework, Petitioner asserts that *Becton, Dickinson* factors (a), (b), and (d) favor institution. *Id.*

Under part two of the *Advanced Bionics* framework, Petitioner asserts that *Becton, Dickinson* factors (c), (e), and (f) favor institution. In particular, Petitioner contends that "[b]y not considering Tuan, Miller, or Redaelli, the Examiner erred in its evaluation of the prior art, thus warranting reconsideration." *Id.* Additionally, Petitioner points out that "with the exception of the Notice of Allowance, the Office issued no substantive action showing its consideration of the art." *Id.* at 7–8.

3. Patent Owner's Contentions

Regarding the first part of the *Advanced Bionics* framework, Patent Owner notes that Petitioner acknowledges the primary reference Nollet was cited by the Examiner as among the closest prior art of record. Prelim. Resp. 2. As for the secondary references, Patent Owner contends that Petitioner makes only a conclusory assertion that Tuan, Miller, and Redaelli are not cumulative of prior art cited during prosecution. *Id.* at 3–4. In particular, Patent Owner argues that "Petitioner does not identify a single substantive difference between or among the secondary references and the art considered during prosecution." *Id.* at 4. Patent Owner argues that Petitioner is wrong to suggest that Redaelli, but not any of the Examiner's cited prior art, teaches element [1.10], because Petitioner relies primarily on Nollet for teaching element [1.10] and only cites Redaelli in the alternative. *Id.* at 4–5 (citing Pet. 58–59). Patent Owner argues that "Petitioner should not be permitted to present its grounds one way in an attempt to avoid denial under § 325(d) only to later assert reliance on Nollet for element 1.10." *Id.* at 5. Patent Owner further contends that, in any case, the Examiner indicated that other prior art of record teaches element [1.10], including, for example, Creamer (U.S. Patent No. 8,713,574), which teaches "a way to **minimize reconfiguration** through using of already configured cores." *Id.* at 5–6 (quoting Ex. 1002, 88). Patent Owner also points to Young (U.S. Patent No. 7,669,035), which was also cited by the Examiner, as teaching "minimization of processor reconfiguration." *Id.* at 6 (citing Ex. 2002, 17:23–26). Patent Owner asserts that Petitioner failed to address Creamer and Young. *Id.* at 6.

Regarding the second part of the *Advanced Bionics* framework, Patent Owner contends that Petitioner's argument that the Examiner did not consider Tuan, Miller, and Redaelli is not sufficient to show material error. *Id.* at 6–7. "Otherwise," Patent Owner argues, "the *Advanced Bionics* question would collapse into whether there are any overlapping references." *Id.* at 7. Patent Owner further contends that "Petitioner does not even attempt to address the teachings of the art relied on by the [E]xaminer (with the exception of Nollet, which the Petition uses as its primary reference)," and as such, fails to identify error. *Id.*

4. Discussion

Having reviewed the parties' arguments and evidence, we agree with Patent Owner that the Petition presents substantially the same prior art that was already considered by the Examiner during prosecution of the '306 patent and that Petitioner has not demonstrated material error by the Office in its prior consideration of that art.

a) Whether the Same or Substantially the Same Art Previously Was Presented to the Office

There is no dispute that Nollet was among the closest prior art considered by the Examiner during prosecution. As noted above, the Petition relies primarily on Nollet, in view of the knowledge of one of ordinary skill in the art, for teaching each limitation in the independent challenged claims. *See* Pet. 38–60, 67–72. Although the Petition cites additional teachings in Tuan, Miller, and Redaelli for certain limitations (*see id.*), Petitioner has not specifically identified any limitations for which the cited disclosure in Tuan, Miller, or Redaelli is not cumulative to that in Nollet. Rather, Petitioner asserts, for example, that "Nollet and Tuan are directed to similar systems that assign reconfigurable tiles of a hardware

device to tasks of an application" (*id.* at 32), and that "Nollet and Miller are both directed to efficient resource sharing among applications, including with the use of reconfigurable devices, such as FPGAs" (*id.* at 33). Moreover, Petitioner reasons that combining the teachings of Tuan and Miller with those of Nollet "merely involves incorporating known features that are explicitly disclosed in Tuan and/or Miller and would have been understood by [one of ordinary skill in the art] as likely present but not explicitly disclosed by Nollet." *Id.* at 34. Accordingly, we understand the Petition to be applying Tuan and Miller mainly as alternatives to Nollet, or as evidence of the knowledge of one of ordinary skill in the art.

Although Petitioner highlights the Petition's citation to Redaelli for claim element [1.10], quoted above in § I.E, and argues that the Office did not find this limitation to be present in the prior art (Pet. 5), Petitioner relies primarily on Nollet for element [1.10] (*see id.* at 58–59). Specifically, the Petition asserts that one of ordinary skill in the art "would have understood Nollet as minimizing reconfiguration of a processing unit assigned to a task that has a preference for that processing unit when the processing unit is already executing the task and has not yet completed it," and only relies on Redaelli "[a]lternatively, with respect to [the obviousness ground based on Nollet, Tuan, Miller, and Redaelli]." *Id.* at 59. Further, Petitioner asserts that "[l]ike Nollet, Redaelli is directed to partially and dynamically reconfigurable FPGAs," and reasons that adding the teachings of Redaelli to the combined teachings of Nollet, Tuan, and Miller "merely involves incorporating known features that are explicitly disclosed by Redaelli and would have been understood by [one of ordinary skill in the art] as likely present, but not explicitly disclosed by Nollet." *Id.* at 37. Therefore, as with

Tuan and Miller, Petitioner appears to apply Redaelli as an alternative to Nollet, or as evidence of the knowledge of one of ordinary skill in the art. In addition, Petitioner fails to distinguish the relied upon disclosure in Redaelli from Creamer or Young, both of which were cited and substantively discussed by the Examiner in the Notice of Allowance. *See* Ex. 1002, 87–88.[8]

Based on the current record, we determine that Tuan, Miller, and Redaelli are essentially cumulative to Nollet or other prior art cited by the Examiner, and conclude that the first part of the *Advanced Bionics* framework is satisfied. *See Advanced Bionics*, Paper 6 at 7–8.

b) Whether the Same or Substantially the Same Arguments Previously Were Presented to the Office

As discussed above, we determine that the same or substantially the same prior art previously was presented to the Office. Accordingly, we need not reach whether the same or substantially the same arguments previously were presented to the Office. *See Advanced Bionics*, Paper 6 at 20.

c) Whether Petitioner Sufficiently Demonstrates that the Office Erred

Having determined that the same or substantially the same prior art previously was presented to the Office, we evaluate whether Petitioner sufficiently demonstrates that the Office erred in a manner material to the patentability of the challenged claims.

---

[8] We note that other than Nollet, Petitioner has not introduced any of the other four references cited by the Examiner as being, "[t]he closest prior art of record" (Ex. 1002, 87), into the current record. *See id.* at 87–88 ("The closest prior art of record, Nollet et al (U.S. Pu. 2009/0187756), Young et al (U.S. Pat. 7669035), Creamer et al (U.S. Pat. 8713574), Yancey et al (U.S. Pat. 7444454) and Nordquist (U.S. Pat. 7447873), disclose different portions of the limitations of claim 12 and 24.").

Under the second part of the *Advanced Bionics* framework, Petitioner must demonstrate that the Examiner erred in the evaluation of the prior art, for example, by showing the Office misapprehended or overlooked specific teachings in the relevant prior art such that the error by the Office was material to the patentability of the challenged claims. *Advanced Bionics*, Paper 6 at 8 n.9.

Petitioner's argument that the Examiner erred simply by not considering Tuan, Miller, and Redaelli (Pet. 7) is not persuasive because, under the first part of the *Advanced Bionics* framework, discretionary denial under § 325(d) may be based on presentation of art that is substantially the same as that previously presented to the Office, and is not limited to the same art previously presented. *See Advanced Bionics*, Paper 6 at 8.

We are also not persuaded by Petitioner's argument that "the Office issued no substantive action showing its consideration of the art," other than the Notice of Allowance. Pet. 7–8. Although *Becton, Dickinson* factor (c) considers the extent to which the asserted art was evaluated during examination, including whether the prior art was the basis for rejection (*Becton, Dickinson*, Paper 8 at 17), the lack of a rejection itself is not dispositive of whether there was material error. Instead, the Notice of Allowance shows that the Examiner extensively cited relevant disclosure in Nollet and stated that, *inter alia*, Nollet individually "do[es] not expressly teach or render obvious the limitations recited in [the independent claims], **when taken in the context of the claim as a whole**." Ex. 1002, 87.

Further, the Examiner's reasoning in the Notice of Allowance contradicts Petitioner's suggestion that additional teachings from Tuan, Miller, and Redaelli for limitations [1.0], [1.1], [1.3], [1.5]–[1.8], and [1.10]

must be combined with teachings from Nollet in order to render claim 1 unpatentable. *See* Pet. 6. Petitioner does not specifically identify any alleged mistakes made by the Examiner with respect to any of the limitations Petitioner highlights. Nor did the Examiner indicate that it was the absence of teachings in the prior art of any particular limitation or limitations that led to allowance. Rather, it was each independent claim "**as a whole**" that the Examiner found established patentability when considering Nollet, among other references. Ex. 1002, 87–88.

Thus, when considering the record before us, we determine that substantially the same prior art previously was presented to the Office and Petitioner has not demonstrated that the Office erred in a manner material to the patentability of the challenged claims.

III. CONCLUSION

For the foregoing reasons, we exercise our discretion to deny institution of *inter partes* review under 35 U.S.C. § 325(d).

IV. ORDER

In consideration of the foregoing, it is hereby

ORDERED that the Petition is *denied* as to all challenged claims, and no trial is instituted.

FOR PETITIONER:

John S. Goetz
goetz@fr.com

Walter Renner
Axf-ptab@fr.com

Jennifer Huang
jjh@fr.com

David Holt
Holt2@fr.com

Nicholas Stephens
nstephens@fr.com

FOR PATENT OWNER:

Scott McKeown
Scott.mckeown@ropesgray.com

W. Cook Alciati
calciati@gardellagrace.com

Michael Dorfman
mdorfman@gardellagrace.com