US 20040224638A1

(19) United States

(12) Patent Application Publication (10) Pub. No.: US 2004/0224638 A1

Fadell et al. (43) Pub. Date: Nov. 11, 2004

(54) MEDIA PLAYER SYSTEM

(75) Inventors: **Anthony M. Fadell**, Portola Valley, CA (US); **Stephen Paul Zadesky**, San Carlos, CA (US); **John Benjamin Filson**, Los Altos, CA (US)

Correspondence Address:
BEYER WEAVER & THOMAS LLP
P.O. BOX 778
BERKELEY, CA 94704-0778 (US)

(73) Assignee: **Apple Computer, Inc.**

(21) Appl. No.: **10/423,490**

(22) Filed: **Apr. 25, 2003**

Publication Classification

(51) **Int. Cl.**[7] **H04M 1/00**; H04B 1/38

(52) **U.S. Cl.** **455/66.1**; 455/41.2

(57) **ABSTRACT**

A media player system is disclosed. One aspect of the media player system pertains to a docking station that allows a media player to communicate with other media devices. Another aspect of the media player system pertains to a wireless media player system that includes a hand held media player capable of transmitting information over a wireless connection and one or more media devices capable of receiving information over the wireless connection. Another aspect of the media player system pertains to a method of wirelessly connecting the hand held media player to another device. The method includes selecting a media item on the hand held media player; selecting one or more remote recipients on the hand held media player; and transmitting the media item locally to the hand held media player, and wirelessly to the selected remote recipients. Another aspect of the media player system pertains to a hand held music player that includes a transmitter for transmitting information over a wireless connection. The transmitter is configured to at least transmit a continuous music feed to one or more personal tuning devices that each include a receiver capable of receiving information from the transmitter over the wireless connection. Yet another aspect of the media player system pertains to a connector that includes a housing and a plurality of spatially separated contacts mounted within the housing. A first set of contacts are directed at a first functionality and a second set of contacts are directed at a second functionality that is different than the first functionality.

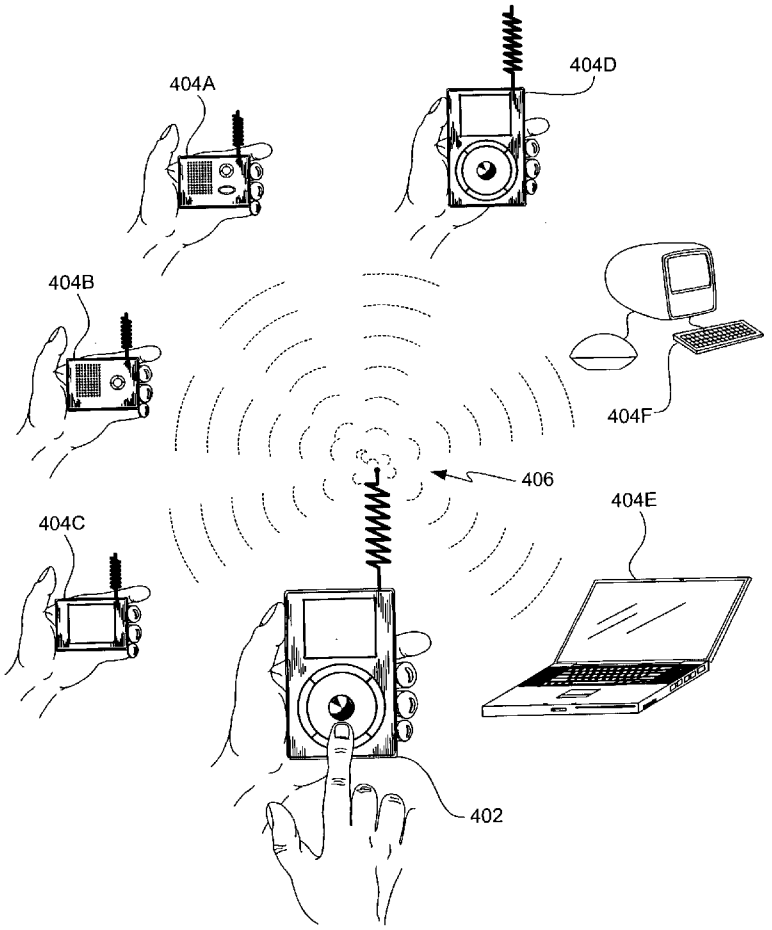

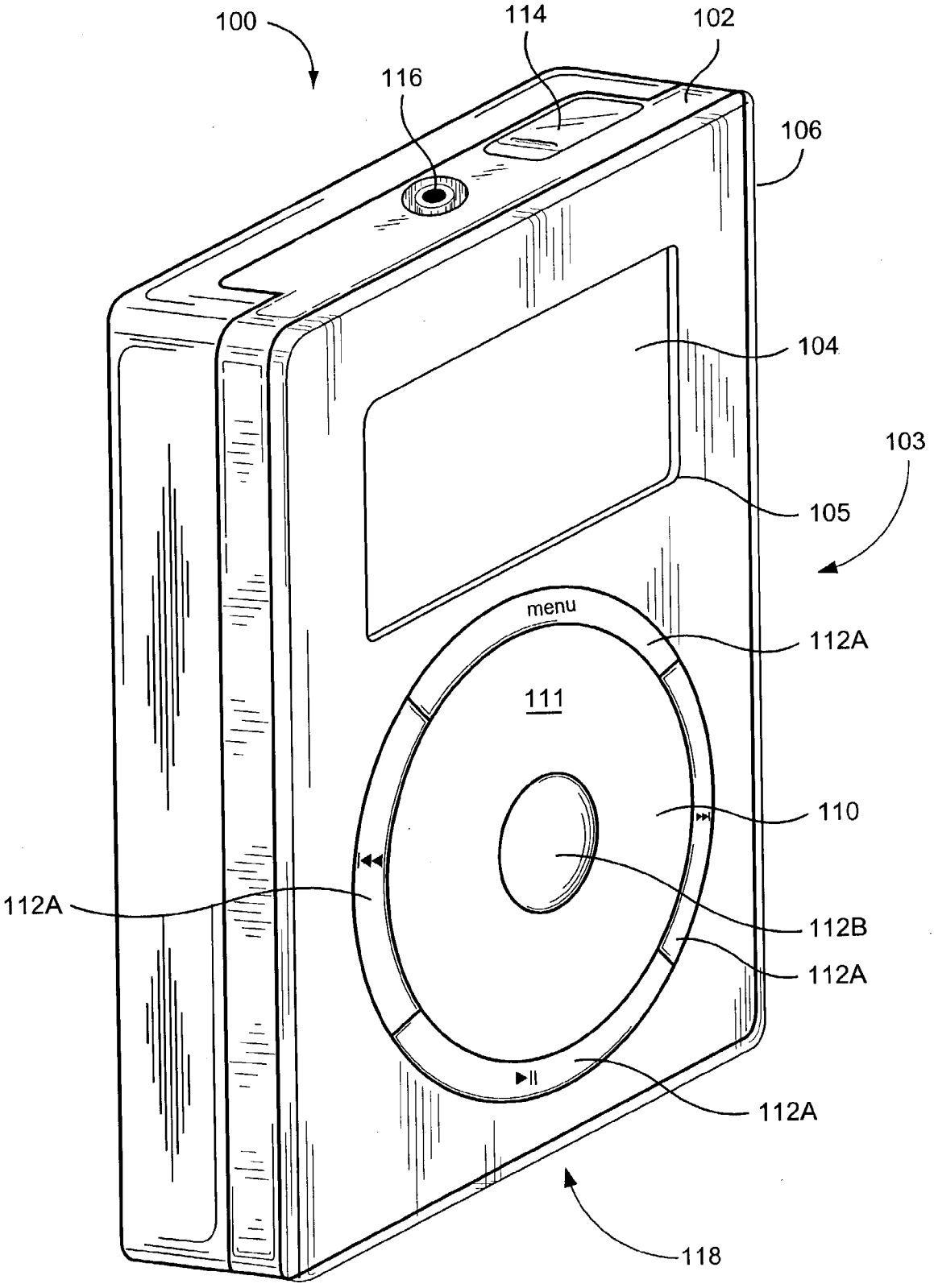
100
114
102
116
106
104
103
105
menu
112A
111
110
112A
112B
112A
112A
118

FIG. 1

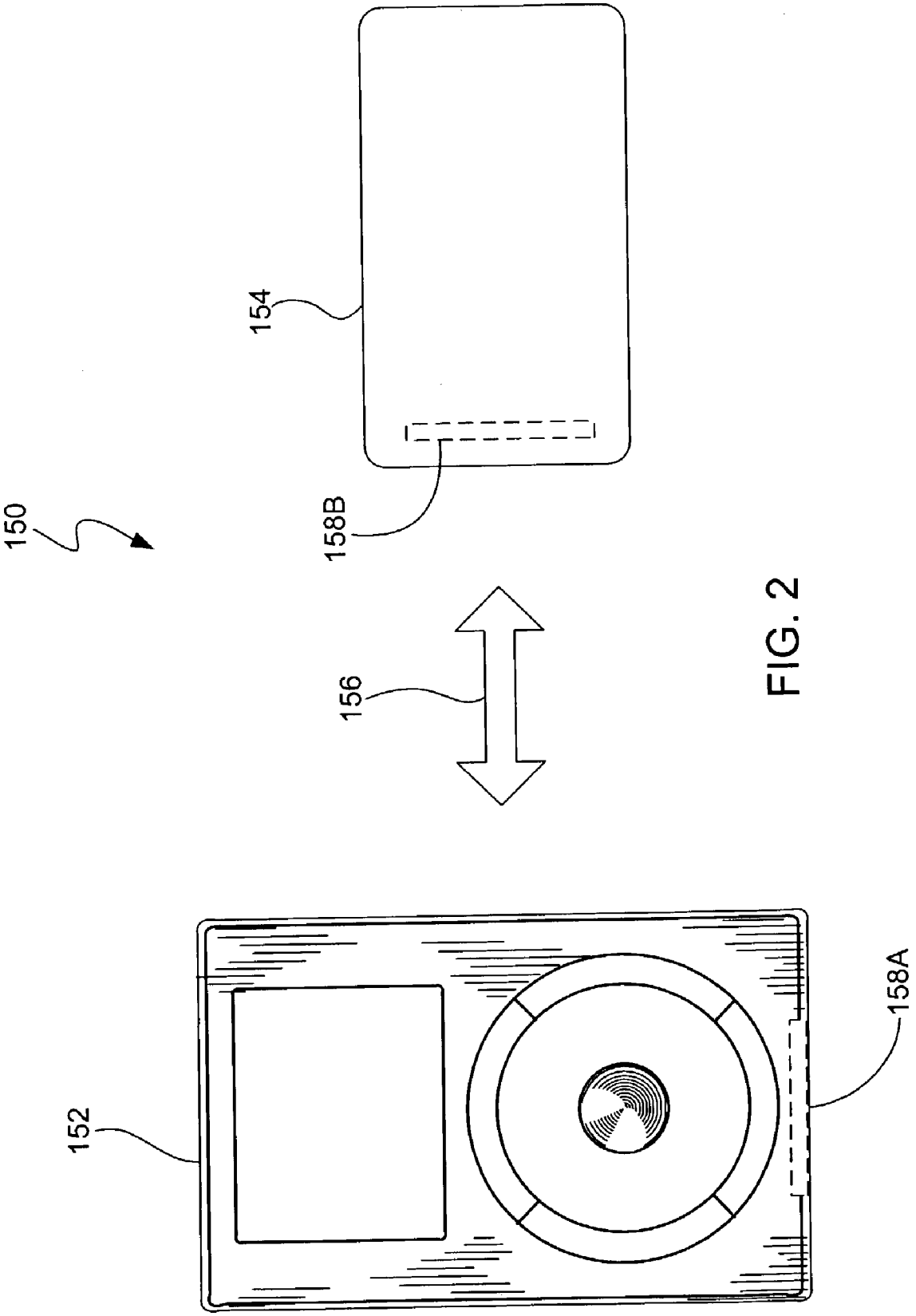

FIG. 2

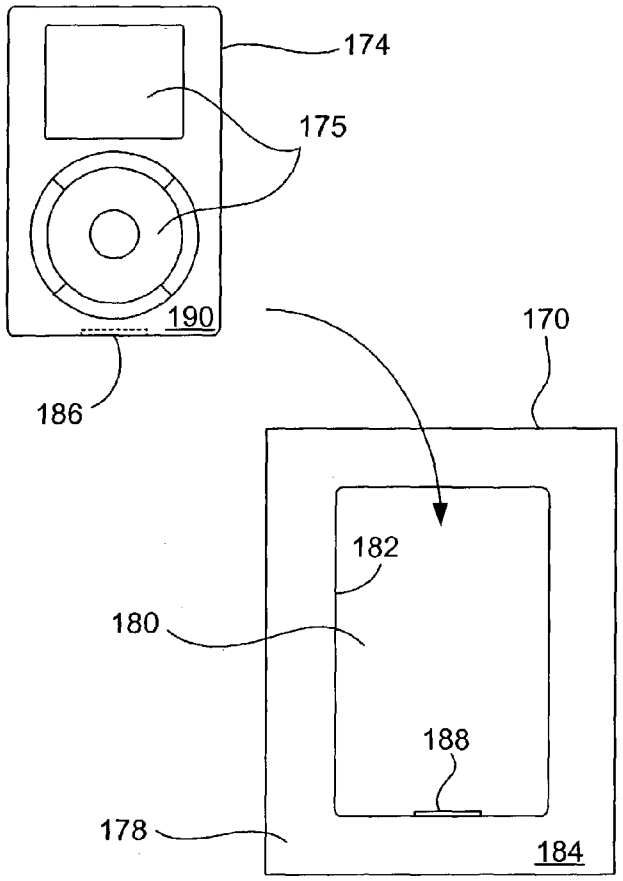

FIG. 3A

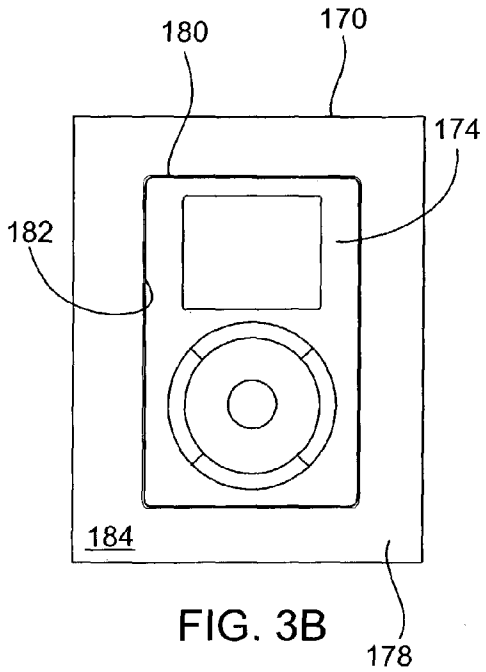

FIG. 3B

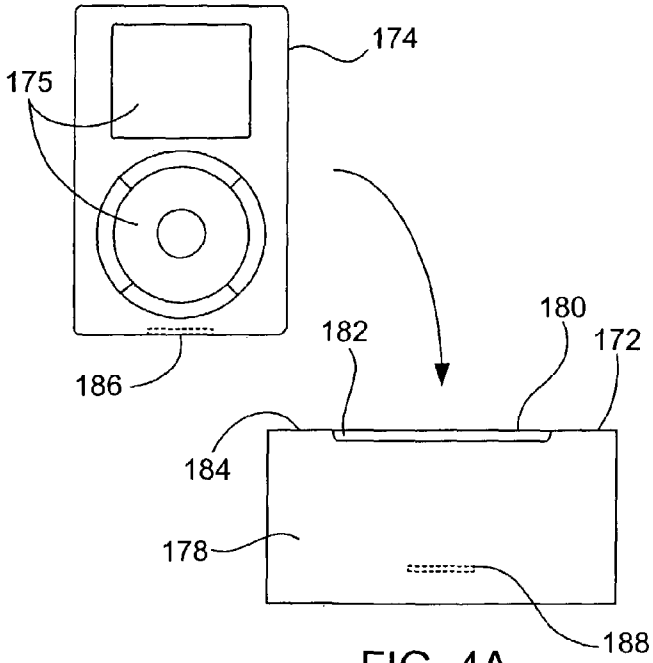

FIG. 4A

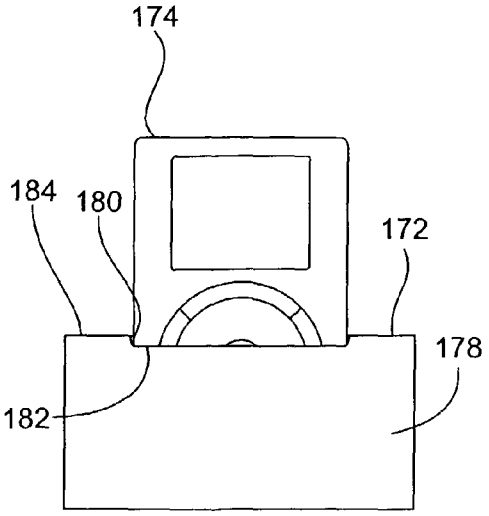

FIG. 4B

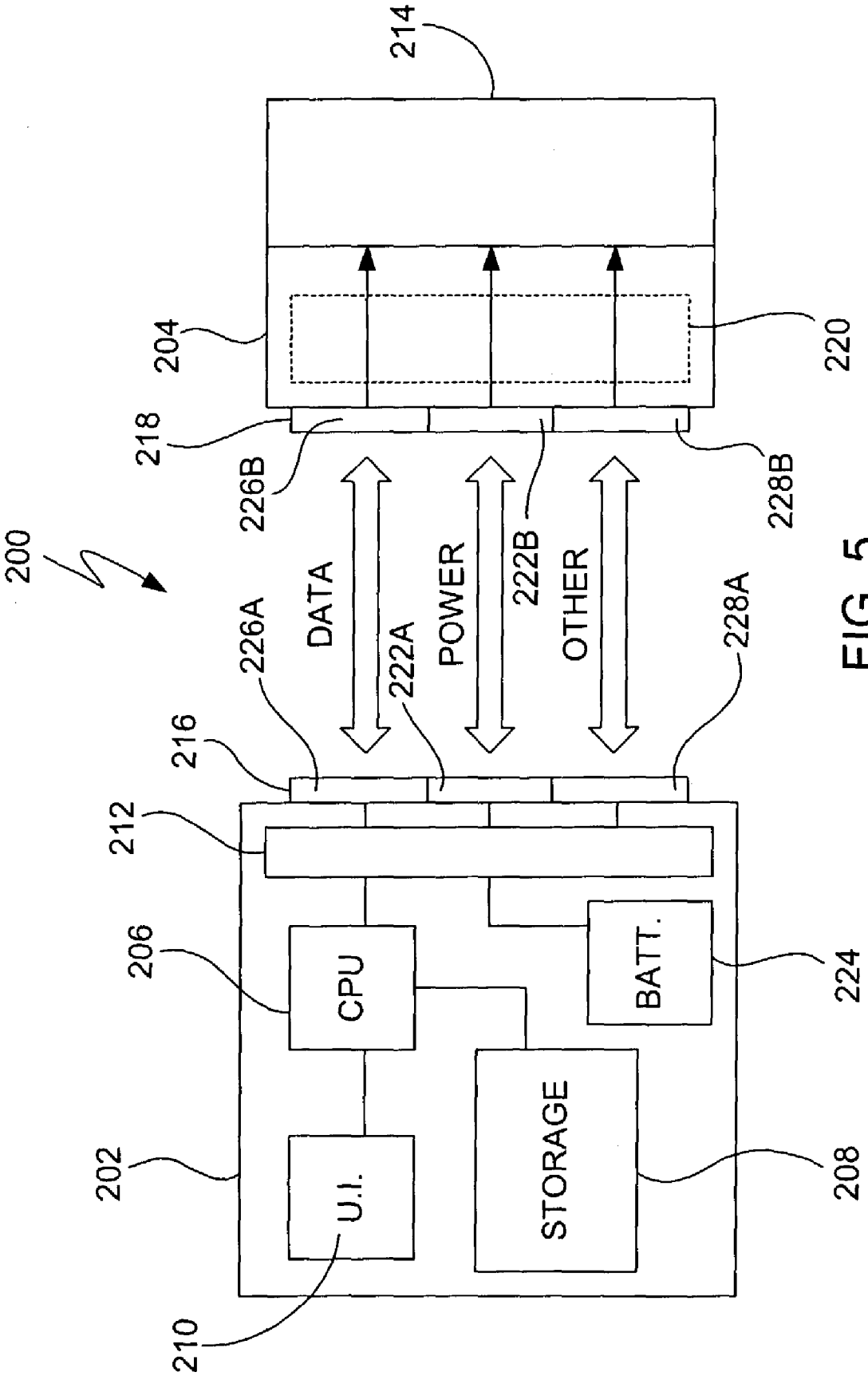
200
202
204
206
208
210
212
214
216
218
220
222A
222B
224
226A
226B
228A
228B
DATA
POWER
OTHER
CPU
U.I.
STORAGE
BATT.

FIG. 5

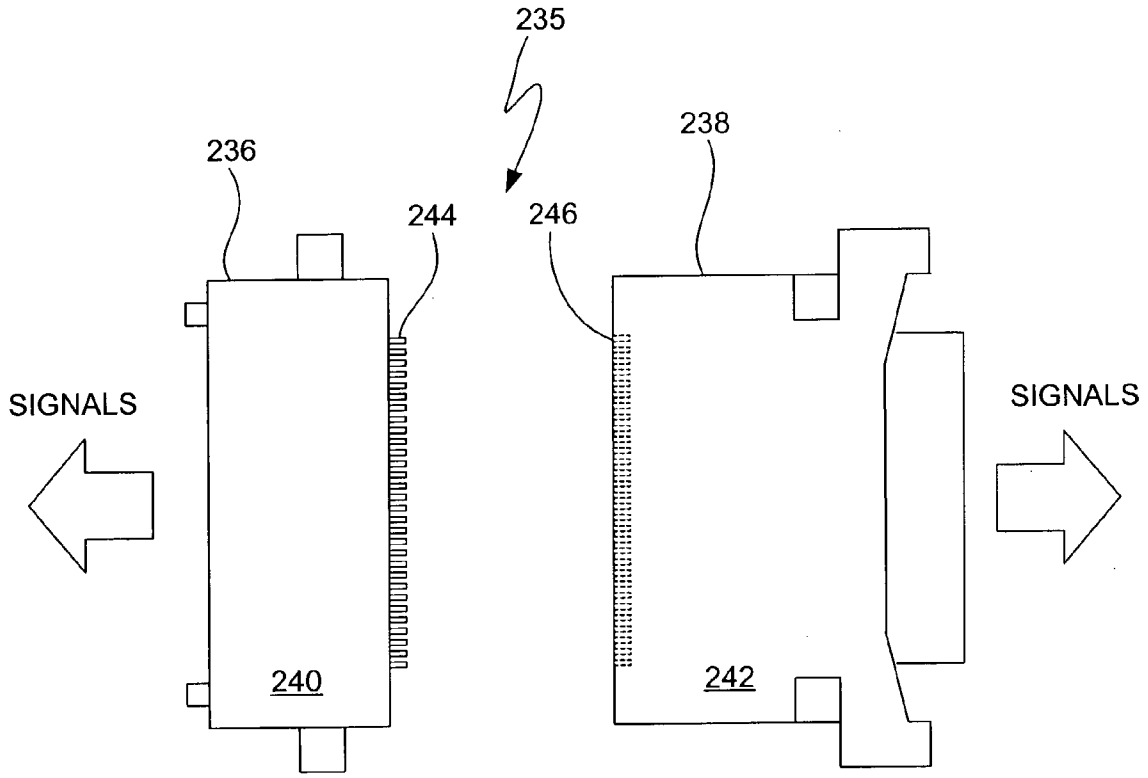
235
236
244
246
238
SIGNALS
SIGNALS
240
242

FIG. 6A

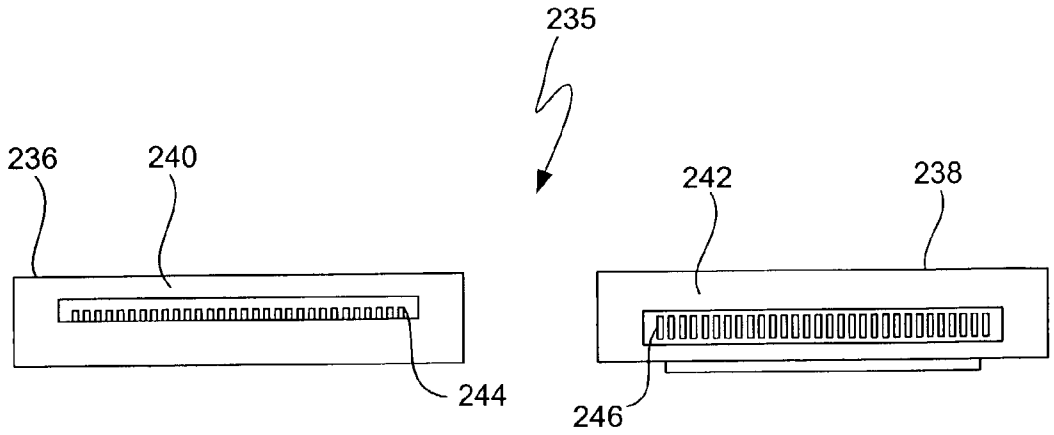
235
236
240
242
238
244
246

FIG. 6B

PIN DESIGNATION CHART

Pin#	Signal name	I/O	Function
1	F/W GND	Input	Firewire and charger ground
2	F/W GND	Input	Firewire and charger ground
3	TPA+	I/O	Firewire signal
4	USB D+	I/O	USB signal
5	TPA-	I/O	Firewire signal
6	USB D-	I/O	USB signal
7	TPB+	I/O	Firewire signal
8	USB PWR	Input	USB power in, this is not used for powering, but to detect a connection to a USB host
9	TPB-	I/O	Firewire signal
10	Accessory Identify	Input	Pull down in dock to notify media player of specific device
11	F/W PWR+	Input	Firewire and charger input power (8v to 30v dc)
12	F/W PWR+	Input	Firewire and charger input power (8v to 30v dc)
13	ACCESSORY PWR(3V3)	Output	3.3v output from media player, current limited to 100mA for powering accessories
14	Reserved		
15	USB GND	GND	Digital ground in media player
16	DGND	GND	Digital ground in media player
17	Reserved		
18	Dock Tx		Serial protocol (Data To media player)
19	Dock Rx		Serial protocol (Data From media player)
20	Accessory Detect	I/O	
21	Reserved		
22	Reserved		
23	Reserved		
24	Reserved		
25	LINE-IN L	Input	Line level input to the media player for the left channel
26	LINE-IN R	Input	Line level input to the media player for the right channel
27	LINE-OUT L	Output	Line level output to the media player for the left channel
28	LINE-OUT R	Output	Line level output to the media player for the right channel
29	Audio Return	GND	Audio return - Signal, never to be grounded inside accessory
30	DGND	GND	Digital ground in media player
31	Chassis		Chassis ground for connector shell
32	Chassis		Chassis ground for connector shell

FIG. 6C

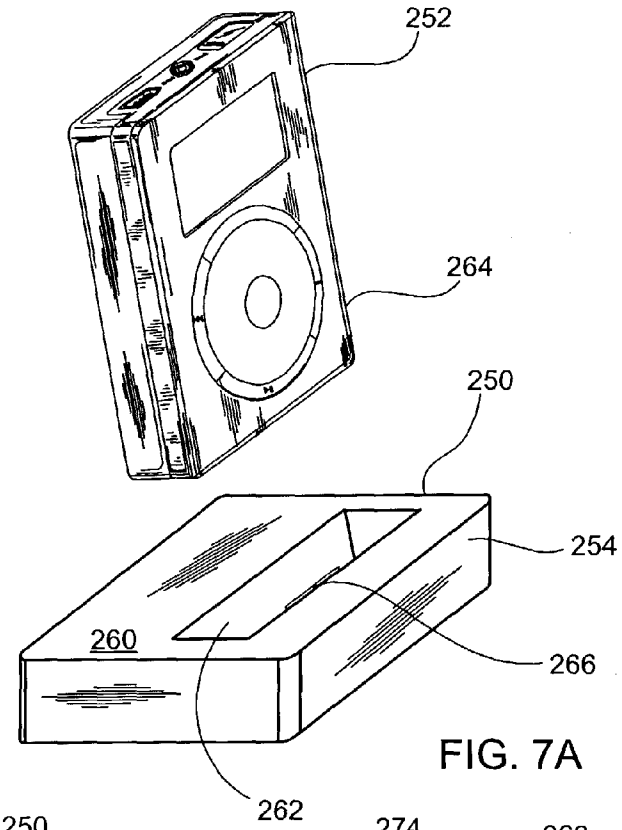

FIG. 7A

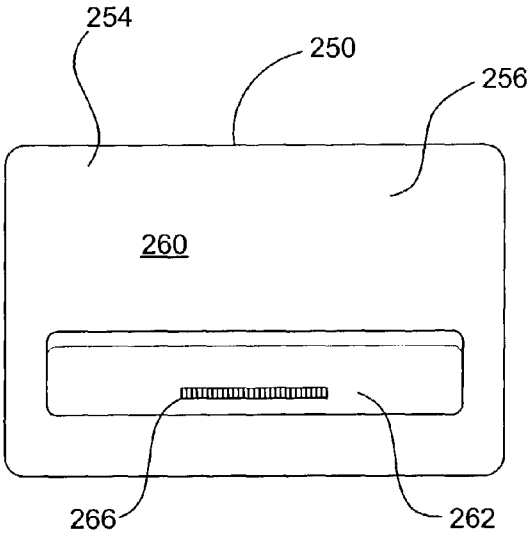

FIG. 7B

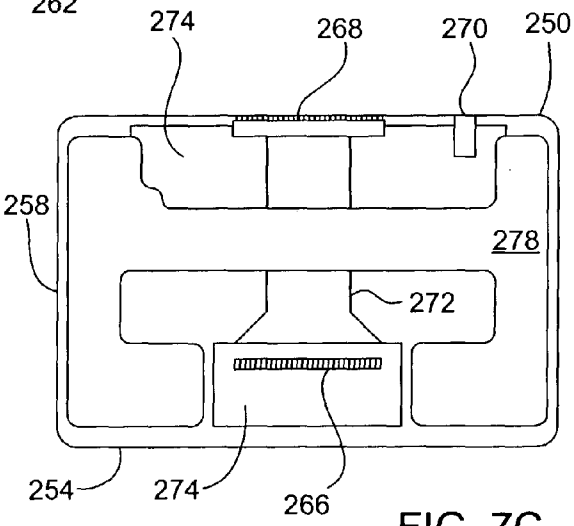

FIG. 7C

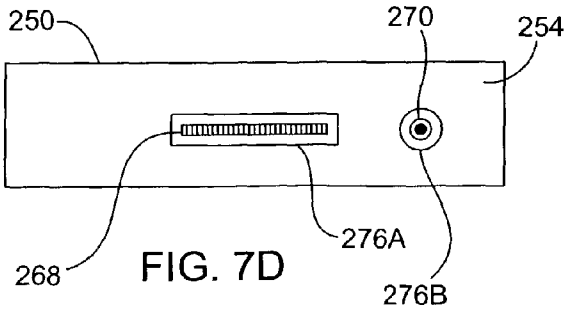

FIG. 7D

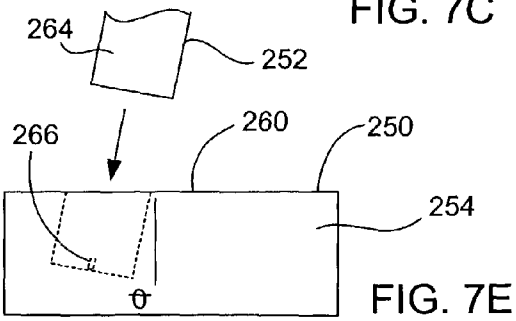

FIG. 7E

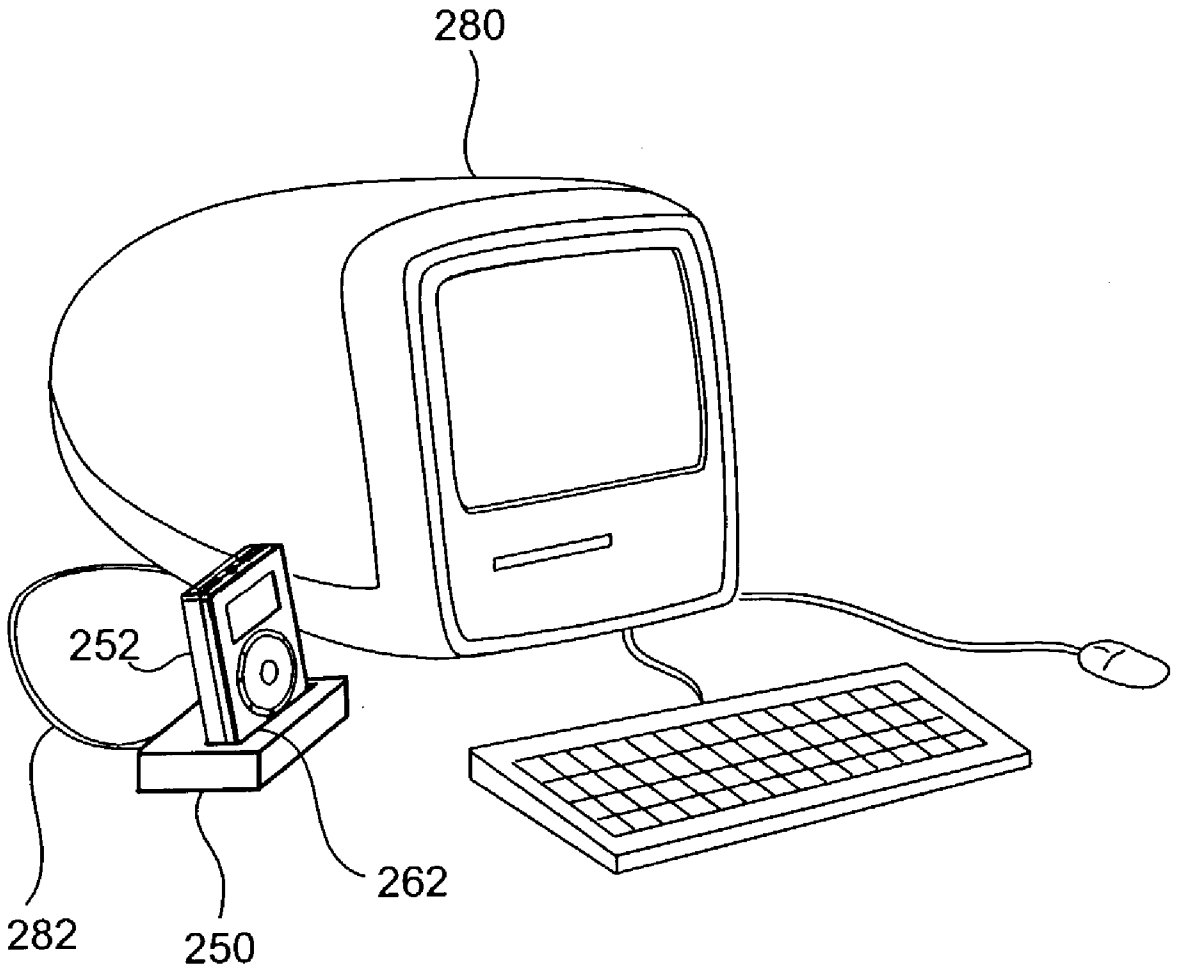

FIG. 8

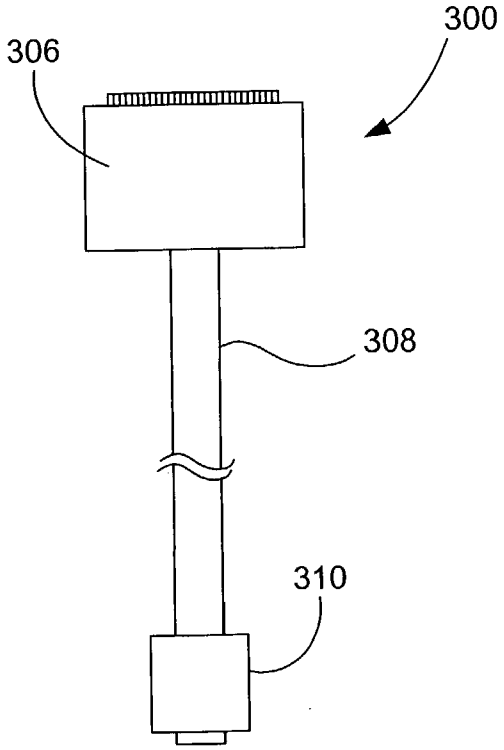

FIG. 9A

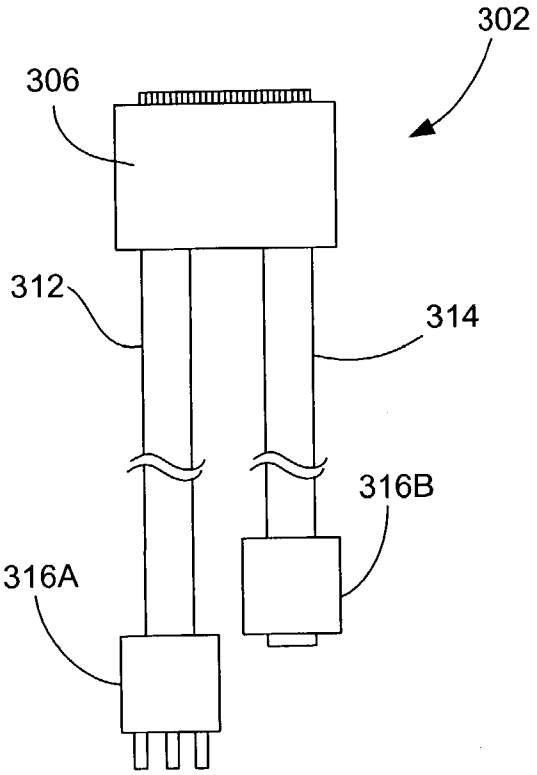

FIG. 9B

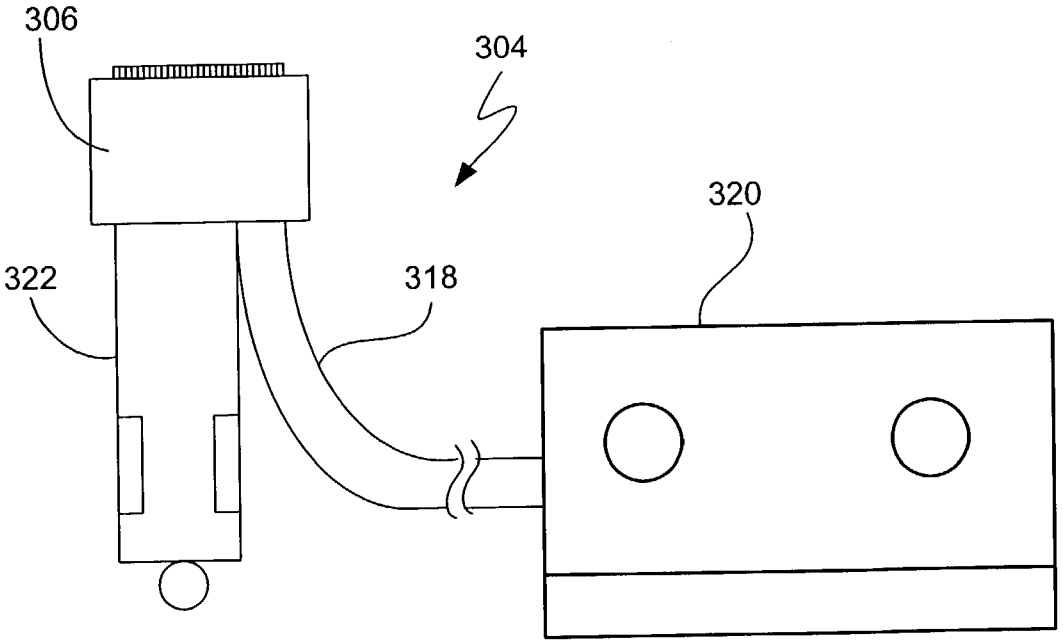

FIG. 9C

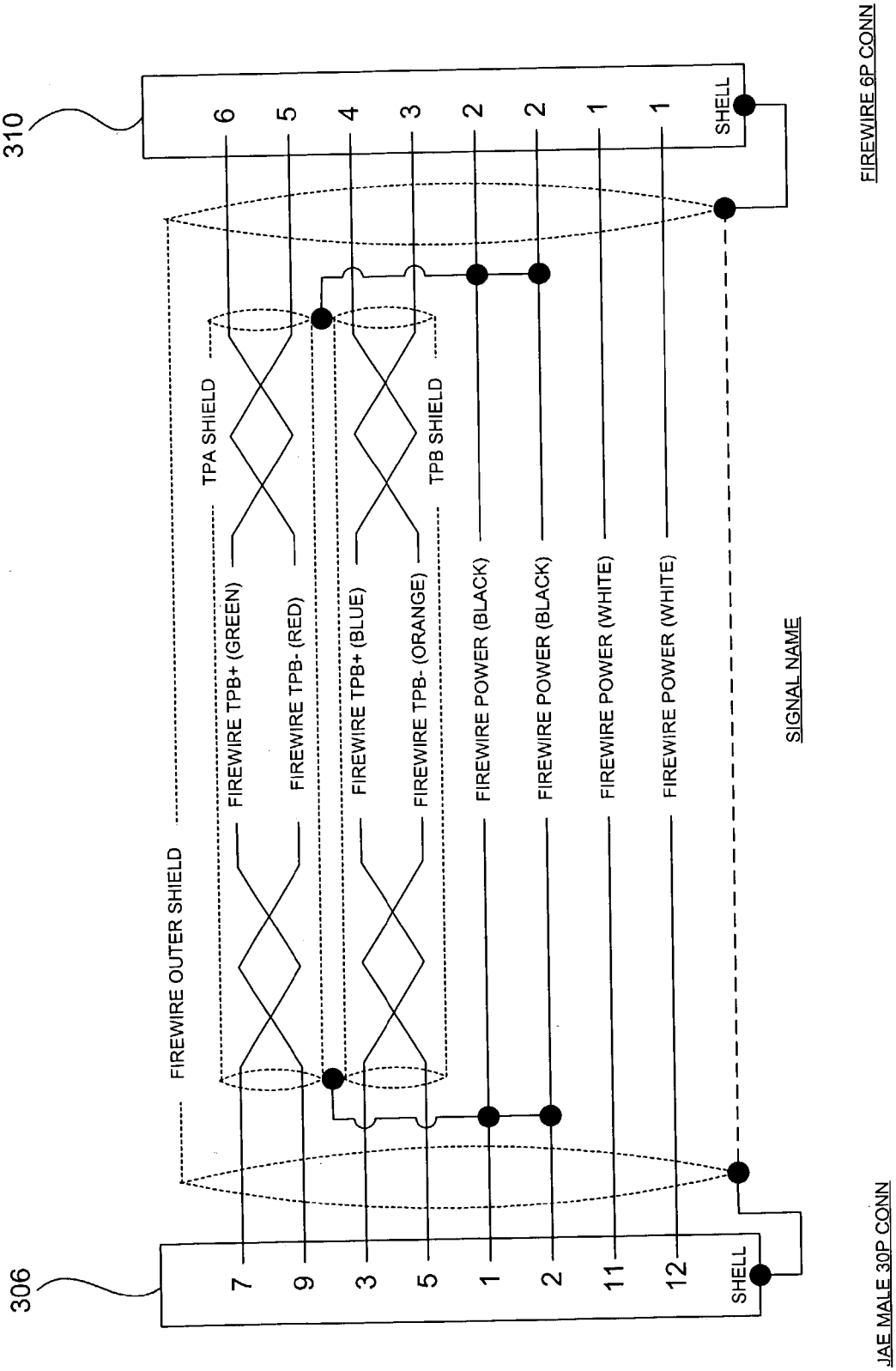
310
306
FIREWIRE 6P CONN
JAE MALE 30P CONN
SIGNAL NAME
FIREWIRE OUTER SHIELD
TPA SHIELD
TPB SHIELD
FIREWIRE TPB+ (GREEN)
FIREWIRE TPB- (RED)
FIREWIRE TPB+ (BLUE)
FIREWIRE TPB- (ORANGE)
FIREWIRE POWER (BLACK)
FIREWIRE POWER (BLACK)
FIREWIRE POWER (WHITE)
FIREWIRE POWER (WHITE)
6
5
4
3
2
2
1
1
SHELL
7
9
3
5
1
2
11
12
SHELL

FIG. 9D

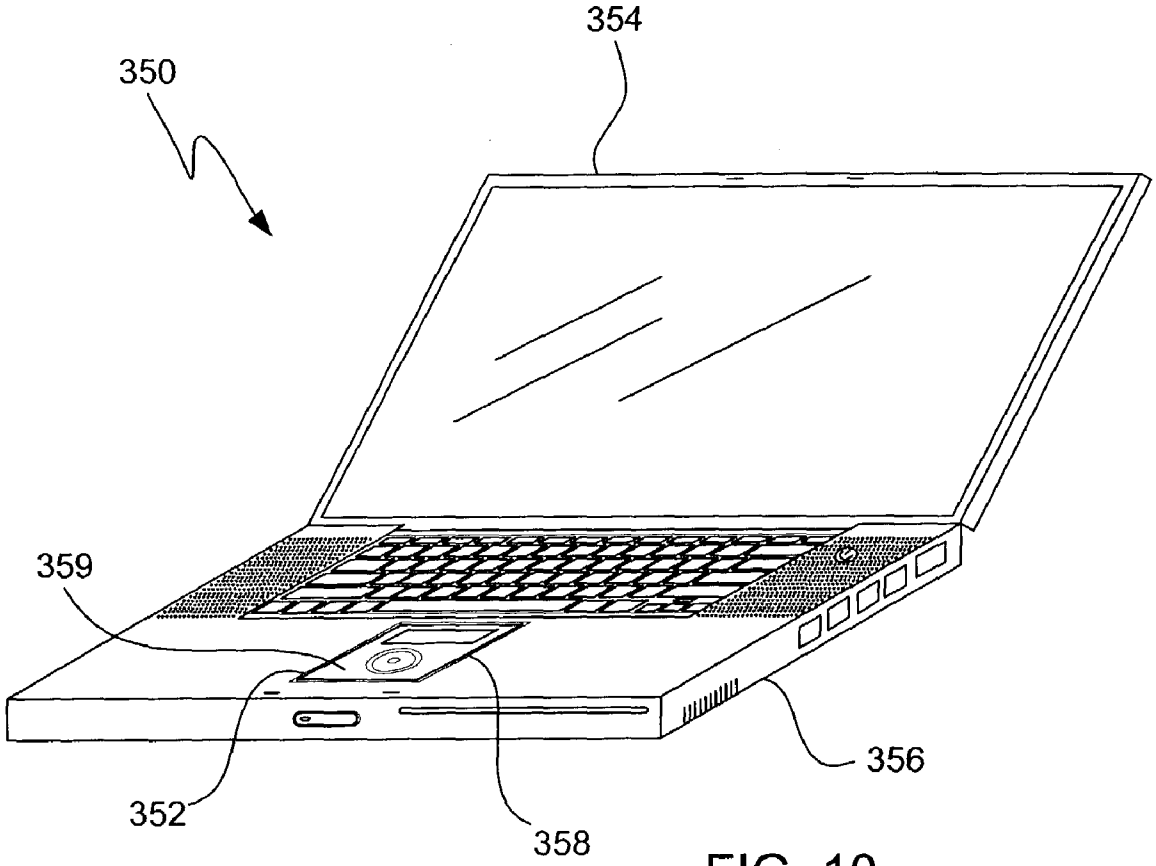

FIG. 10

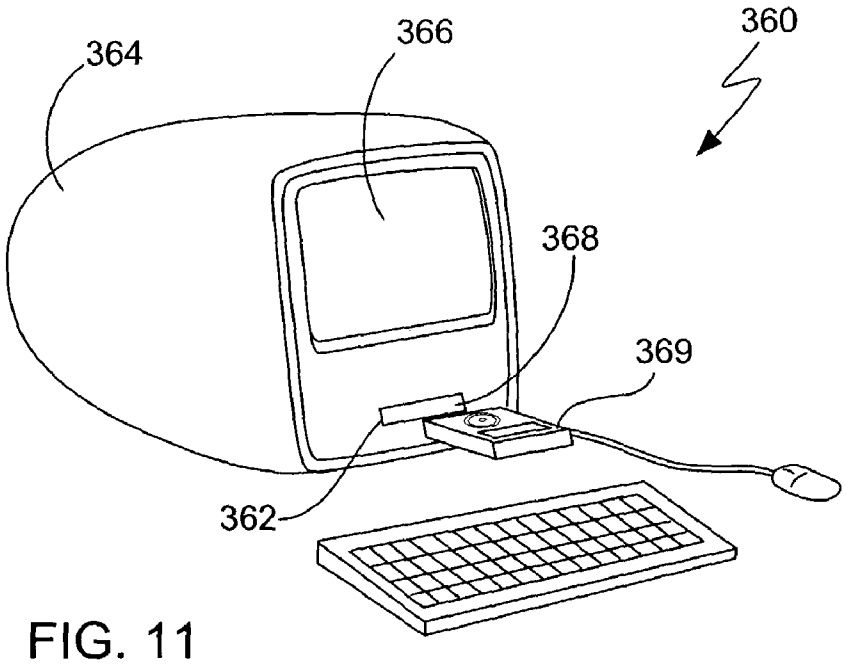

FIG. 11

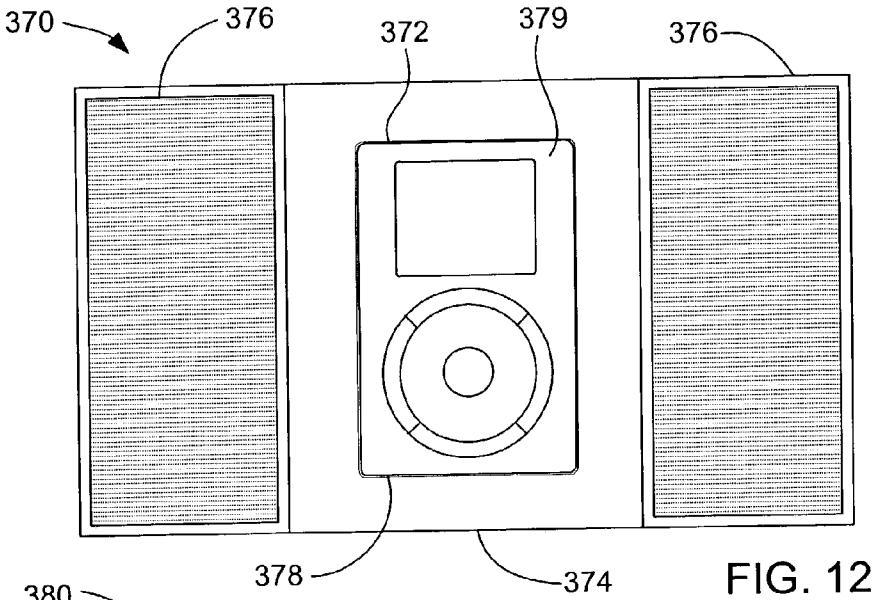

FIG. 12

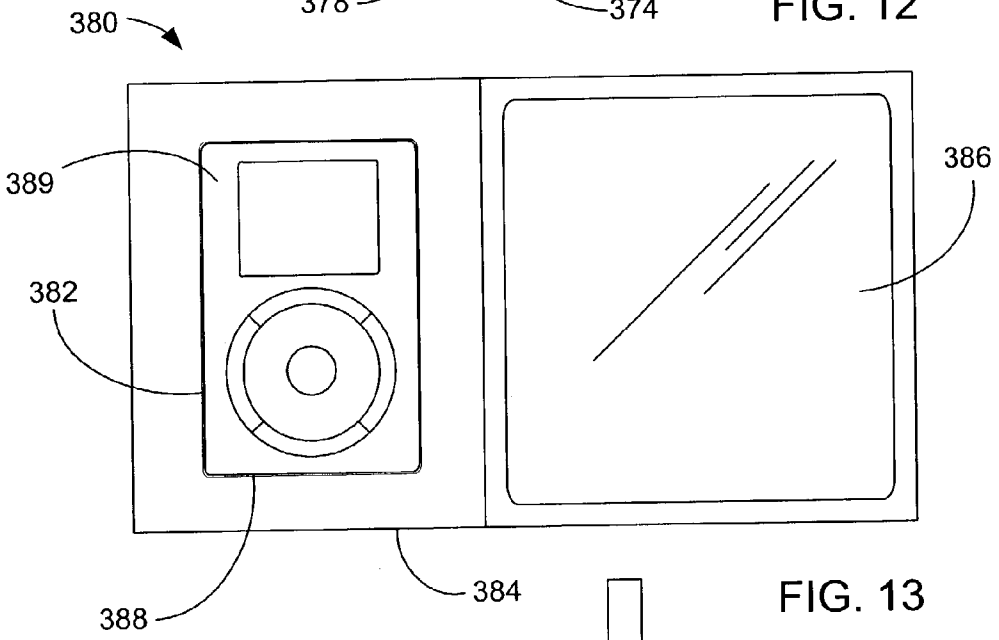

FIG. 13

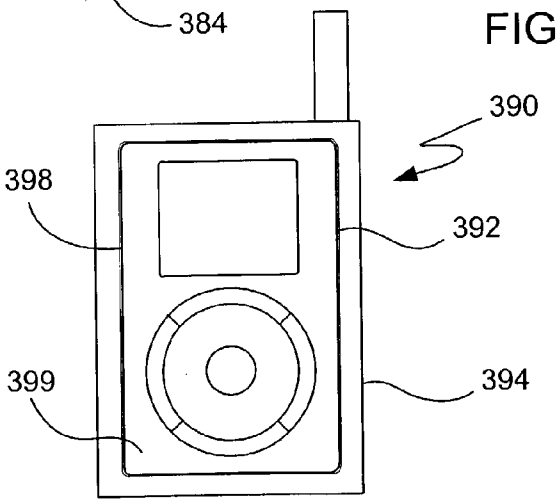

FIG. 14

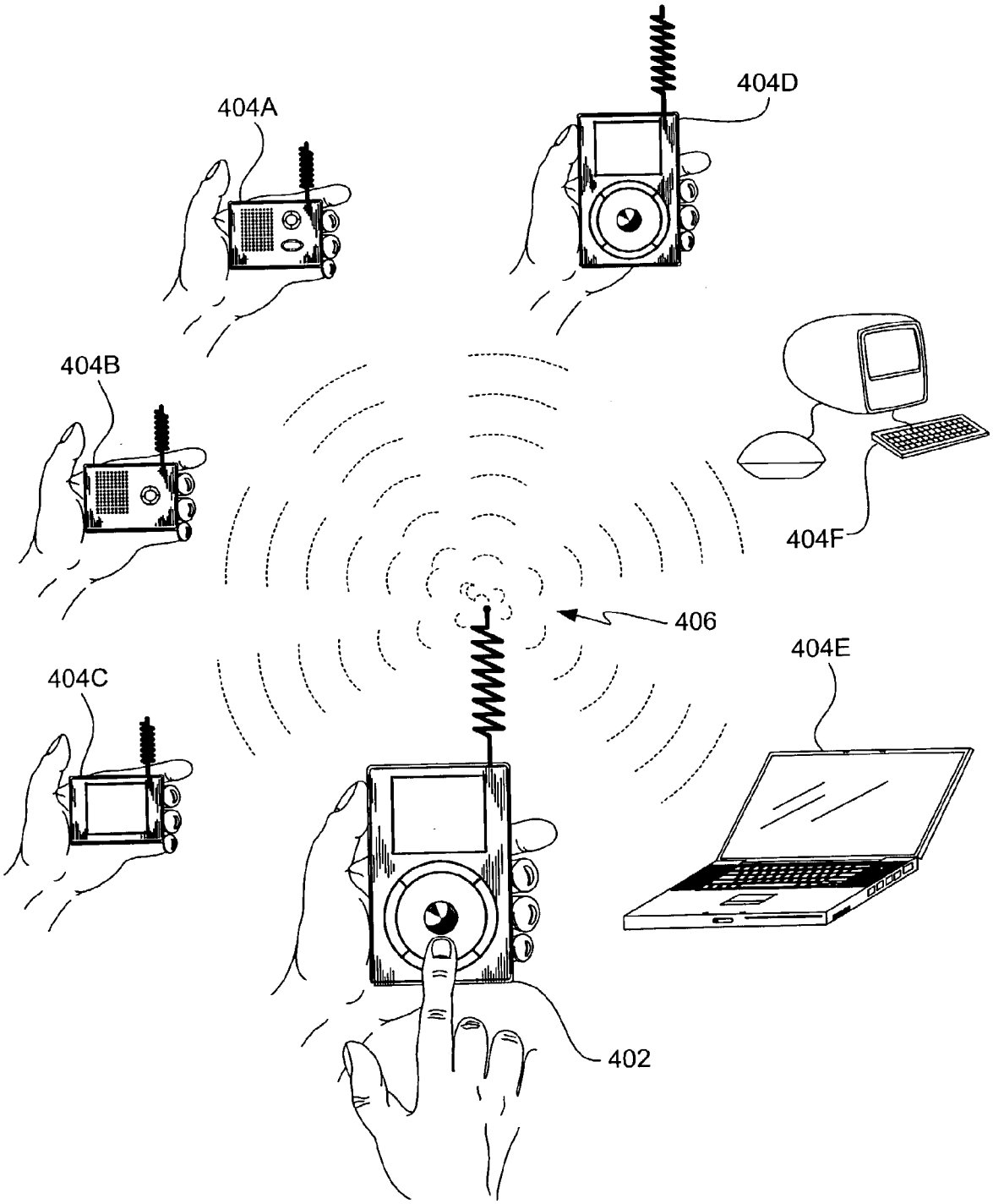

FIG. 15

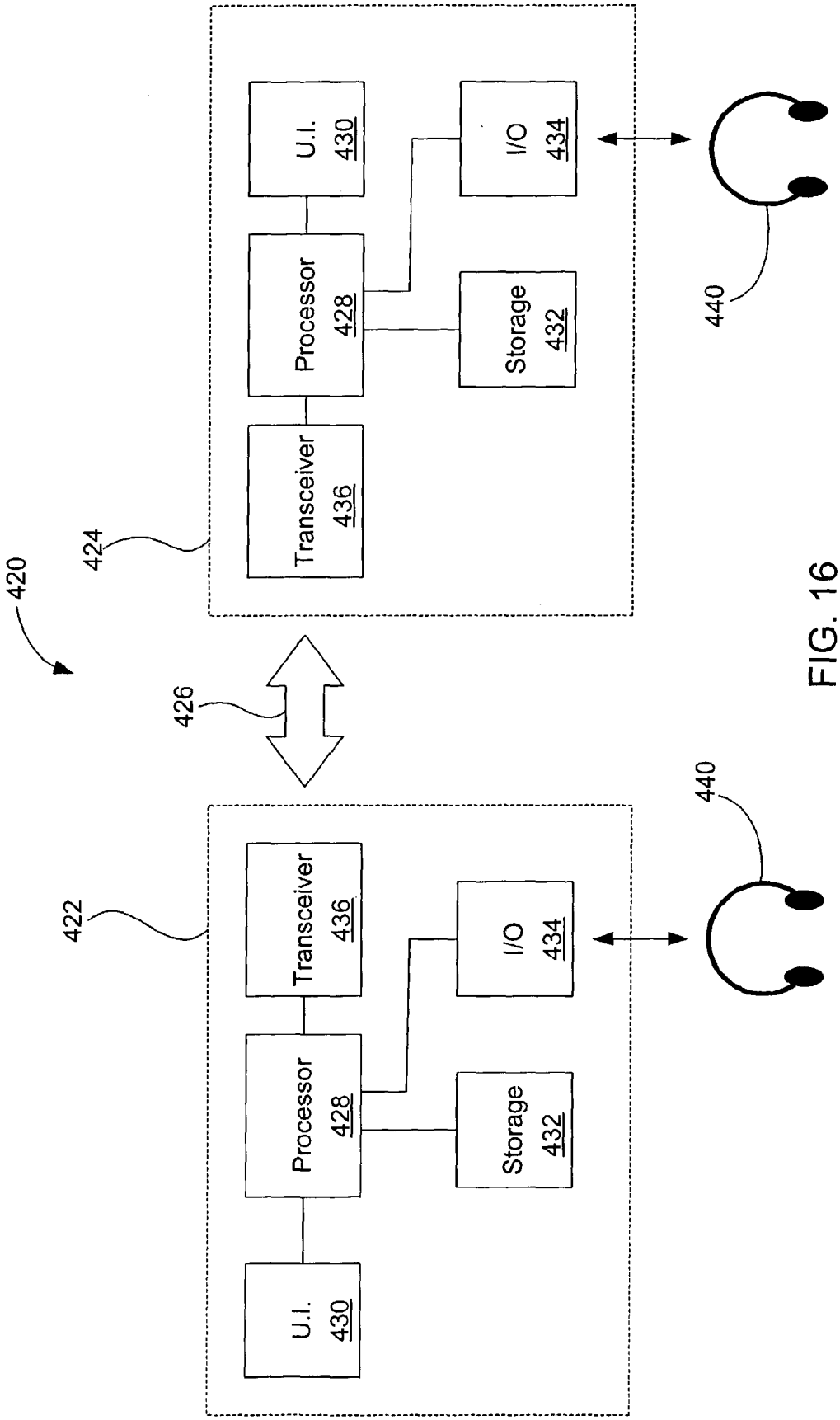
420
424
U.I.
430
Processor
428
Transceiver
436
I/O
434
Storage
432
440
426
422
Transceiver
436
Processor
428
U.I.
430
I/O
434
Storage
432
440

FIG. 16

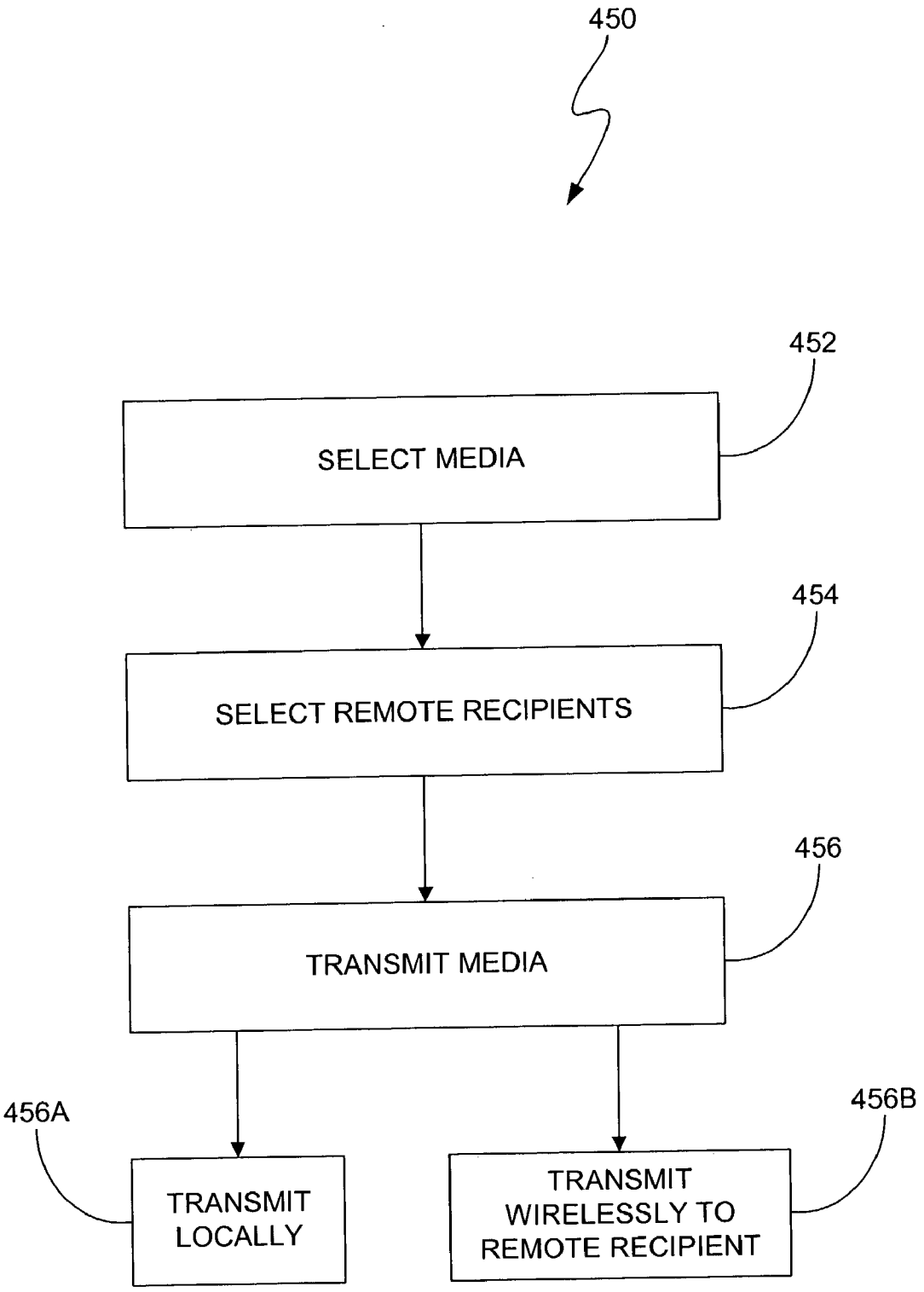
450
452
SELECT MEDIA
454
SELECT REMOTE RECIPIENTS
456
TRANSMIT MEDIA
456A
TRANSMIT LOCALLY
456B
TRANSMIT WIRELESSLY TO REMOTE RECIPIENT

FIG. 17

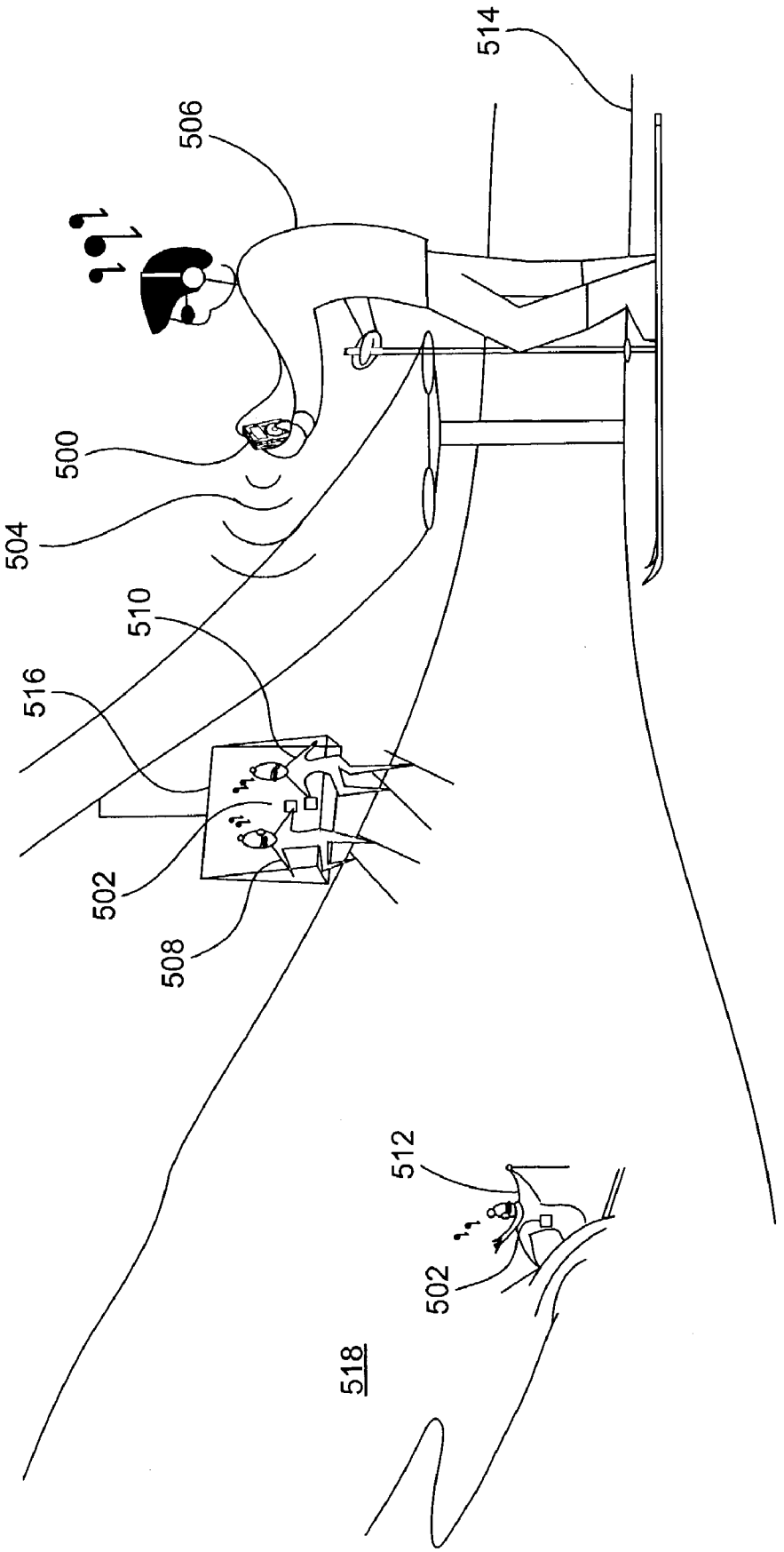

FIG. 18

MEDIA PLAYER SYSTEM

BACKGROUND OF THE INVENTION

[0001] 1. Field of the Invention

[0002] The present invention relates generally to a media player. More particularly, the present invention relates to improved features for connecting the media player to external devices.

[0003] 2. Description of the Related Art

[0004] The hand held consumer electronics market is exploding, and an increasing number of those products are including mechanism for expanding connections thereto. By way of example, hand held consumer electronic products may correspond to cellular phones, personal digital assistants (PDAs), video games, radios, MP3 players, CD players, DVD players, televisions, game players, cameras, etc. Most of these devices include some sort of connector for making connections to other devices (e.g., Firewire, USB, audio out, video in, etc.). Some of these devices have been capable of connections to other devices through docking stations. For example, cellular phones have included docking stations for charging the cellular phones and PDAs have included docking stations for communicating with a host computer. Other devices have been capable of wireless connections therebetween. For example, cellular phones use wireless connections to communicate back and forth (e.g., include wireless receivers).

[0005] MP3 music players in particular have typically made connections to other devices through connectors. For example, the MP3 music player known as the Ipod manufactured by Apple Computer of Cupertino, Calif. has included a Firewire connector for communicating with a computer. The Firewire connector through a cable connected to the computer generally allows data transmissions to travel back and forth between the MP3 music player and the computer. As should be appreciated, MP3 music players are configured to play MP3 formatted songs. These songs may be uploaded from the computer and thereafter stored in the MP3 player. As is generally well known, the MP3 format is a compression system for digital music that helps reduce the size of a digitized song without hurting the sound quality, i.e., compress a CD-quality song without losing the CD sound quality. By way of example, a 32 MB song on a CD may compress down to about a 3 MB song using the MP3 format. This generally lets a user download a song in minutes rather than hours.

[0006] Although current media players such as MP3 music players work well, there is a continuing need for improved features for connecting or coupling media players to one or more external devices (e.g., input or output).

SUMMARY OF THE INVENTION

[0007] The invention relates, in one embodiment, to a docking station that allows a media player to communicate with other media devices. The media player (e.g., music player) having a first media connector for connection to the docking station. The docking station includes a housing and a media bay disposed inside the housing. The media bay is capable of receiving the media player. The media bay includes a media bay opening and a second media connector. The media bay opening provides access to the media bay connector. The media bay connector is configured for removable engagement with the first media connector of the media player. The first and second media connectors are configured to allow data and power transmissions therethrough. The data transmission includes at least two data formats. The docking station also includes one or more outputs that are operatively coupled to the second media bay connector. The outputs are configured to allow at least data transmissions therethrough.

[0008] The invention relates, in another embodiment, to a wireless media player system. The wireless media player system includes a hand held media player (e.g., music player) capable of transmitting information over a wireless connection. The wireless media player system also includes one or more media devices (e.g., tuning devices) capable of receiving information over the wireless connection.

[0009] The invention relates, in another embodiment, to a method of wirelessly connecting a hand held media player to another device. The method includes selecting a media item on the hand held media player. The method also includes selecting one or more remote recipients on the hand held media player. The method further includes transmitting the media item locally to the hand held media player, and wirelessly to the selected remote recipients.

[0010] The invention relates, in another embodiment, to a hand held music player (e.g., MP3 player) that includes a transmitter for transmitting information over a wireless connection. The transmitter is configured to at least transmit a continuous music feed to one or more personal tuning devices that each include a receiver capable of receiving information from the transmitter over the wireless connection.

[0011] The invention relates, in yet another embodiment, to a connector for use in a media player system. The connector includes a housing and a plurality of spatially separated contacts mounted within the housing. A first set of contacts are appropriated for Firewire transmissions, a second set of contacts being appropriated for USB transmissions.

BRIEF DESCRIPTION OF THE DRAWINGS

[0012] The present invention is illustrated by way of example, and not by way of limitation, in the figures of the accompanying drawings and in which like reference numerals refer to similar elements and in which:

[0013] **FIG. 1** is a perspective view of a media player, in accordance with one embodiment of the present invention.

[0014] **FIG. 2** is a diagram of a media player system, in accordance with one embodiment of the present invention.

[0015] **FIGS. 3A and 3B** are diagrams of a docking station, in accordance with one embodiment of the present invention.

[0016] **FIGS. 4A and 4B** are diagrams of a docking station, in accordance with one embodiment of the present invention.

[0017] **FIG. 5** is a block diagram of a media player system, in accordance with one embodiment of the present invention.

[0018] **FIG. 6A** is a top view of a connector assembly, in accordance with one embodiment of the present invention.

[0019] **FIG. 6B** is a front view of a connector assembly, in accordance with one embodiment of the present invention.

[0020] **FIGS. 6C** is a pin designation chart, in accordance with one embodiment of the present invention.

[0021] **FIG. 7A** is a perspective diagram of a stand alone docking station, in accordance with one embodiment of the present invention.

[0022] **FIG. 7B** is a top view of a stand alone docking station, in accordance with one embodiment of the present invention.

[0023] **FIG. 7C** is a top view of a stand alone docking station with its cover removed, in accordance with one embodiment of the present invention.

[0024] **FIG. 7D** is a back view of a stand alone docking station, in accordance with one embodiment of the present invention.

[0025] **FIG. 7E** is a side view of a stand alone docking station, in accordance with one embodiment of the present invention.

[0026] **FIG. 8** is a diagram of a media player docking station in use, in accordance with one embodiment of the invention.

[0027] **FIG. 9A** is a diagram of a cable adapter, in accordance with one embodiment of the present invention.

[0028] **FIG. 9B** is a diagram of a cable adapter, in accordance with one embodiment of the present invention.

[0029] **FIG. 9C** is a diagram of a cable adapter, in accordance with one embodiment of the present invention.

[0030] **FIG. 9D** is a functional diagram of a cable adapter, in accordance with one embodiment of the present invention.

[0031] **FIG. 10** is a diagram of a notebook computer with a built-in docking station, in accordance with another embodiment of the present invention.

[0032] **FIG. 11** is a diagram of a desktop computer with a built-in docking station, in accordance with another embodiment of the present invention.

[0033] **FIG. 12** is a diagram of a boom box with a built-in docking station, in accordance with another embodiment of the present invention.

[0034] **FIG. 13** is a diagram of a photo frame with a built-in docking station, in accordance with another embodiment of the present invention.

[0035] **FIG. 14** is a diagram of a family radio with a built-in docking station, in accordance with another embodiment of the present invention.

[0036] **FIG. 15** is a diagram of a of a wireless communication system, in accordance with another embodiment of the present invention.

[0037] **FIG. 16** is a block diagram of a of a wireless communication system, in accordance with another embodiment of the present invention.

[0038] **FIG. 17** is a flow diagram of a wireless transmission method, in accordance with one embodiment of the present invention

[0039] **FIG. 18** is a perspective diagram of a wireless communication network in use, in accordance with another embodiment of the present invention.

DETAILED DESCRIPTION OF THE INVENTION

[0040] The present invention will now be described in detail with reference to a few preferred embodiments thereof as illustrated in the accompanying drawings. In the following description, numerous specific details are set forth in order to provide a thorough understanding of the present invention. It will be apparent, however, to one skilled in the art, that the present invention may be practiced without some or all of these specific details. In other instances, well known process steps have not been described in detail in order not to unnecessarily obscure the present invention.

[0041] **FIG. 1** is a perspective diagram of a media player **100**, in accordance with one embodiment of the present invention. The term "media player" generally refers to computing devices that are dedicated to processing media such as audio, video or other images, as for example, music players, game players, video players, video recorders, cameras, and the like. In some cases, the media players contain single functionality (e.g., a media player dedicated to playing music) and in other cases the media players contain multiple functionality (e.g., a media player that plays music, displays video, stores pictures and the like). In either case, these devices are generally portable so as to allow a user to listen to music, play games or video, record video or take pictures wherever the user travels.

[0042] In one embodiment, the media player is a handheld device that is sized for placement into a pocket of the user. By being pocket sized, the user does not have to directly carry the device and therefore the device can be taken almost anywhere the user travels (e.g., the user is not limited by carrying a large, bulky and often heavy device, as in a laptop or notebook computer). For example, in the case of a music player, a user may use the device while working out at the gym. In case of a camera, a user may use the device while mountain climbing. In the case of a game player, the user can use the device while traveling in a car. Furthermore, the device may be operated by the users hands, no reference surface such as a desktop is needed. In the illustrated embodiment, the media player **100** is a pocket sized hand held MP3 music player that allows a user to store a large collection of music (e.g., in some cases up to 4,000 CD-quality songs). Although used primarily for storing and playing music, the MP3 music player shown herein may also include additional functionality such as storing a calendar and phone lists, storing and playing games, storing photos and the like. In fact, in some cases, it may act as a highly transportable storage device.

[0043] By way of example, the MP3 music player may correspond to the Ipod MP3 player manufactured by Apple Computer of Cupertino, Calif. The pocket sized Ipod has a width of about 2.4 inches, a height of about 4 inches and depths ranging from about 0.72 to about 0.84 inches.

[0044] As shown in **FIG. 1**, the media player **100** includes a housing **102** that encloses internally various electrical

components (including integrated circuit chips and other circuitry) to provide computing operations for the media player **100**. In addition, the housing may also define the shape or form of the media player. That is, the contour of the housing **102** may embody the outward physical appearance of the media player **100**. The integrated circuit chips and other circuitry contained within the housing may include a microprocessor (e.g., CPU), memory (e.g., ROM, RAM), a power supply (e.g., battery), a circuit board, a hard drive, other memory (e.g., flash) and/or various input/output (I/O) support circuitry. The electrical components may also include components for inputting or outputting music or sound such as a microphone, amplifier and a digital signal processor (DSP). The electrical components may also include components for capturing images such as image sensors (e.g., charge coupled device (CCD) or complimentary oxide semiconductor (CMOS)) or optics (e.g., lenses, splitters, filters). The electrical components may also include components for sending and receiving media (e.g., antenna, receiver, transmitter, transceiver, etc.).

[**0045**] In the illustrated embodiment, the media player **100** includes a hard drive thereby giving the media player massive storage capacity. For example, a 20 GB hard drive can store up to 4000 songs or about 266 hours of music. In contrast, flash-based media players on average store up to 128 MB, or about two hours, of music. The hard drive capacity may be widely varied (e.g., 5, 10, 20 MB, etc.). In addition to the hard drive, the media player **100** shown herein also includes a battery such as a rechargeable lithium polymer battery. These type of batteries are capable of offering about 10 hours of continuous playtime to the media player.

[**0046**] The media player **100** also includes a user interface **103**. The user interface **103** allows the user of the media player **100** to initiate actions on the media player **100** and provides the user with output associated with using the media player (e.g., audio, video, images, etc.). The user interface **103** may be widely varied. By way of example, the user interface **103** may include switches, buttons, keys, dials, trackballs, joysticks, touch pads, touch screens, displays, microphones, speakers, cameras, and the like.

[**0047**] In the illustrated embodiment, the media player **100** includes a display screen **104** and related circuitry. The display screen **104** is used to display a graphical user interface as well as other information to the user (e.g., text, objects, graphics). By way of example, the display screen **104** may be a liquid crystal display (LCD). In one particular embodiment, the display screen corresponds to a 160-by-128-pixel high-resolution display, with a white LED backlight to give clear visibility in daylight as well as low-light conditions. As shown, the display screen **104** is visible to a user of the media player **100** through an opening **105** in the housing **102**, and through a transparent wall **106** that is disposed in front of the opening **105**. Although transparent, the transparent wall **106** may be considered part of the housing **102** since it helps to define the shape or form of the media player **100**.

[**0048**] In addition to the display screen **104**, the media player **100** also includes a touch pad **110**. The touch pad is an intuitive interface that provides easy one-handed operation, i.e., lets a user interact with the media player with one or more fingers. The touch pad **110** is configured to provide one or more control functions for controlling various applications associated with the media player **100**. For example, the touch initiated control function may be used to move an object or perform an action on the display screen **104** or to make selections or issue commands associated with operating the media player **100**. In order to implement the touch initiated control function, the touch pad **110** may be arranged to receive input from a finger moving across the surface of the touch pad **110**, from a finger holding a particular position on the touch pad and/or by a finger tapping on a particular position of the touch pad. The touch pad may be widely varied. For example, the touch pad may be a conventional touch pad based on a Cartesian coordinate system, or the touch pad may be a touch pad based on a Polar coordinate system. Furthermore, the touch pad **110** may be used in a relative and/or absolute mode. In absolute mode, the touch pad **110** reports the absolute coordinates of where it is being touched. For example x, y in the case of the Cartesian coordinate system or (r, θ) in the case of the Polar coordinate system. In relative mode, the touch pad **110** reports the direction and/or distance of change. For example, left/right, up/down, and the like.

[**0049**] The touch pad **110** generally consists of a touchable outer surface **111** for receiving a finger for manipulation on the touch pad **110**. Although not shown in **FIG. 1**, beneath the touchable outer surface **111** is a sensor arrangement. The sensor arrangement includes a plurality of sensors that are configured to activate as the finger sits on, taps on or passes over them. In the simplest case, an electrical signal is produced each time the finger is positioned over a sensor. The number of signals in a given time frame may indicate location, direction, speed and acceleration of the finger on the touch pad, i.e., the more signals, the more the user moved his or her finger. In most cases, the signals are monitored by an electronic interface that converts the number, combination and frequency of the signals into location, direction, speed and acceleration information. This information may then be used by the media player **100** to perform the desired control function on the display screen **104**.

[**0050**] The position of the display screen **104** and touch pad **110** relative to the housing **102** may be widely varied. For example, they may be placed at any external surface (e.g., top, side, front, or back) of the housing **102** that is accessible to a user during manipulation of the media player **100**. In most cases, the touch sensitive surface **111** of the touch pad **110** is completely exposed to the user. In the illustrated embodiment, the touch pad **110** is located in a lower, front area of the housing **102**. Furthermore, the touch pad **110** may be recessed below, level with, or extend above the surface of the housing **102**. In the illustrated embodiment, the touch sensitive surface **111** of the touch pad **110** is substantially flush with the external surface of the housing **102**.

[**0051**] The shape of the display screen **104** and the touch pad **110** may also be widely varied. For example, they may be circular, rectangular, triangular, and the like. In general, the outer perimeter of the shaped touch pad defines the working boundary of the touch pad. In the illustrated embodiment, the display screen is rectangular and the touch pad **110** is circular. More particularly, the touch pad is annular, i.e., shaped like or forming a ring. When annular, the inner and outer perimeter of the shaped touch pad defines the working boundary of the touch pad.

[0052] In addition to above, the media player **100** may also include one or more buttons **112**. The buttons **112** are configured to provide one or more dedicated control functions for making selections or issuing commands associated with operating the media player **100**. By way of example, in the case of an MP3 music player, the button functions may be associated with opening a menu, playing a song, fast forwarding a song, seeking through a menu and the like. In most cases, the button functions are implemented via a mechanical clicking action. The position of the buttons **112** relative to the touch pad **110** may be widely varied. For example, they may be adjacent one another or spaced apart. In the illustrated embodiment, the buttons **112** are configured to surround the inner and outer perimeter of the touch pad **110**. In this manner, the buttons **112** may provide tangible surfaces that define the outer boundaries of the touch pad **110**. As shown, there are four buttons **112**A that surround the outer perimeter and one button **112**B disposed in the center or middle of the touch pad **110**. By way of example, the plurality of buttons **112** may consist of a menu button, play/stop button, forward seek button and a reverse seek button, and the like.

[0053] Moreover, the media player **100** may also include a hold switch **114**. The hold switch **114** is configured to activate or deactivate the touch pad and/or buttons. This is generally done to prevent unwanted commands by the touch pad and/or buttons, as for example, when the media player is stored inside a user's pocket. When deactivated, signals from the buttons and/or touch pad are not sent or are disregarded by the media player. When activated, signals from the buttons and/or touch pad are sent and therefore received and processed by the media player.

[0054] The media player **100** may also include one or more connectors for receiving and transmitting data to and from the media player. By way of example, the media player may include one or more audio jacks, video jacks, data ports and the like. The media player **100** may also include one or more connectors for receiving and transmitting power to and from the media player **100**.

[0055] In the illustrated embodiment, the media player includes a headphone jack **116** and a data port **118**. The headphone jack **116** is capable of receiving a headphone or speaker plug associated with headphones/speakers configured for listening to sound being outputted by the media device **100**. The data port **118**, on the other hand, is capable of receiving a data plug/cable assembly configured for transmitting and receiving data to and from a host device such as a general purpose computer (e.g., desktop computer, portable computer). By way of example, the data port **118** may be used to upload or down load audio, video and other images to and from the media device **100**. For example, the data port may be used to download songs and play lists, audio books, ebooks, photos, and the like into the storage mechanism of the media player.

[0056] The data port **118** may be widely varied. For example, the data port may be a PS/2 port, a serial port, a parallel port, network interface port, a USB port, a Firewire port and/or the like. In some cases, the data port **118** may be a wireless link such as a radio frequency (RF) link or an optical infrared (IR) link in order to eliminate the need for a cable. Although not shown in **FIG. 1**, the media player **100** may also include a power port that receives a power plug/cable assembly configured for delivering powering to the media player **100**. In some cases, the data port **118** may serve as both a data and power port.

[0057] Although only one data port is provided, it should be noted that this is not a limitation and that multiple data ports may be incorporated into the media player. In a similar vein, the data port may include multiple data functionality, i.e., integrating the functionality of multiple data ports into a single data port. Furthermore, it should be noted that the position of the hold switch, headphone jack and data port on the housing may be widely varied. That is, they are not limited to the positions shown in **FIG. 1**. They may be positioned almost anywhere on the housing (e.g., front, back, sides, top, bottom). For example, the data port may be positioned on the top, sides, back, front surfaces of the housing rather than the bottom surface as shown. Although it should be noted that having the data port on the bottom surface provides some benefits when connecting to other devices.

[0058] **FIG. 2** is a diagram of a media player system **150**, in accordance with one embodiment of the present invention. The media player system comprises a media player **152** and one or more media devices **154** that are connected via a media link **156**. As mentioned above, the term "media player" generally refers to computing devices that are dedicated to processing media such as audio, video or other images, as for example, music players, game players, video players, video recorders, cameras, and the like. By way of example, the media player **152** may correspond to the media player **100** shown in **FIG. 1**. Media devices **154** are similar to the media player **152** in that they process media such as audio, video or other images. The media devices may be widely varied. By way of example, the media devices may correspond to other media players, desktop computers, notebook computers, personal digital assistants, video or imaging equipment (e.g., cameras, monitors), audio equipment (home stereos, car stereos, boom boxes), family radios (e.g., walkie talkies), peripheral devices (e.g., keyboards, mice, displays, printers, scanners), personal media devices (discussed in greater detail below) and the like.

[0059] The media devices **154** and the media player **152** are configured to communicate with one another through media link **156**. The protocol under which they communicate may be widely varied. By way of example, the communication protocol may be a master/slave communication protocol, server/client communication protocol, peer/peer communication protocol, and the like. Using a master/slave communication protocol, one of the devices is a master and the other is a slave. The master controls the slave. Using a client/server communication protocol, a server program responds to requests from a client program. The server program may operate on the media player or the media device. Using a peer to peer communication protocol either of the two devices can initiate a communication session.

[0060] The media link **156** may be wired and/or wireless. For example, the media link **156** may be made through connectors and ports or through receivers, transmitters and/or transceivers. The media link may also be one way or two way. For example, in the case of one way, the media player may be configured to transmit signals to the media device but not to receive information from the media device (or vice versa) or in the case of two way, both the media player and

media device may be enabled to receive and transmit signals therebetween. The signals may be data (analog, digital), power (AC, DC), and/or the like. In most cases, the data corresponds to data associated with the media player as for example audio, video, images and the like.

[**0061**] Both the media player **152** and the media device **154** include a media terminal **158**A and **158**B, respectively. The media terminals **158** may provide a direct connection between the media player **152** and the media device **154** (e.g., integrally formed with the media device) or it may provide an indirect connection between the media player **152** and the media device **154** (e.g., a stand alone device). The media terminals **158** provide the media link **156** through one or more connection interfaces. As such, the media player **152** may serve the media devices **154** and/or the media devices **154** may serve the media player **152**. The connection interfaces associated with the media terminals **158** may be wired or wireless connection interfaces.

[**0062**] In wired connections, the media terminals **158** are configured to physically connect so as to operatively couple the media player **152** to the media device **154**. For example, the media player **152** and the media device **154** may include a mating connection made up of connector and port. By way of example, the connection interface may include one or more of the following interfaces: PS/2, serial, parallel, network (e.g., Ethernet), USB, Firewire and/or the like. The connection interface may also include one or more remote, audio (digital or analog), video (digital or analog), and/or charging interfaces. In one embodiment, the media terminal **158**B is a part of docking station that permits the media player **152** to connect with the media device **154**. The docking station may be integrally formed with the media device **154** thereby providing a direction connection with the media player **152** or it may be a standalone device that provides an indirect connection between the media player **154** and the media device **152**.

[**0063**] In wireless connections, the media terminals **158** do not physically connect. For example, the media player **152** and the media device **154** may include a receiver and transmitter for wireless communications therebetween. By way of example, the connection interface may include one or more of the following interfaces: FM, RF, Bluetooth, 802.11 UWB (ultra wide band), IR, magnetic link (induction) and/or the like.

[**0064**] In brief, FM (frequency modulation) is a method of impressing data onto an alternating-current (AC) wave by varying the instantaneous frequency of the wave. This scheme can be used with analog or digital data. RF generally refers to alternating current AC having characteristics such that, if the current is input to an antenna, an electromagnetic field is generated suitable for wireless broadcasting and/or communications. The frequencies associated with RF cover a wide range of the electromagnetic radiation spectrum as for example from about 9 kHz to thousands of GHz. Bluetooth generally refers to a computing and telecommunications industry specification that describes how mobile phones, computers and personal digital assistants can easily interconnect with each other using short range wireless connection. 802.11 generally refers to a family of specification for wireless local area networks (WLANs) developed by a working group of the Institute of Electrical and Electronics Engineers (IEEE). UWB refers to a wireless technology for transmitting large amounts of digital data over a wide specrum of frequency bands with very low power for a short distance. IR generally refers wireless technoilogies that convey data through infrared radiation.

[**0065**] **FIGS. 3 and 4** are diagrams of docking stations **170** and **172**, respectively, in accordance with several embodiment of the present invention. The docking stations **170** and **172** are hardware components that include a set of connection interfaces that allow a media player **174** to communicate with other media devices (not shown) that are not usually taken along with the media player **174**. That is, the docking stations **170** and **172** make available additional functionality that would not otherwise be achieved through the media player **174** and/or the other media devices. The docking stations **170** and **172** may be built into the media device (e.g., hard wired) or they may be stand-alone devices that are connected to the media device through a separate connection (e.g., cord). By way of example, the media player **174** may generally correspond to the media player shown in **FIG. 1**.

[**0066**] As shown, each of the docking stations includes a housing **178**. The housings **178** are configured with a media bay **180** capable of receiving the media player **174** for direct or indirect connection to a media device. The media bay **180** includes a media bay opening **182** in the surface **184** of the housing **178**. The media bay opening **182** is configured to physically receive the media player **174**. In other words, the media player **174** can be inserted into the media bay opening **182**. Once the media player **174** is inserted into the media bay opening **182** (as shown in **FIGS. 3B and 4B**), the functionality provided by a media device operatively coupled to the docking stations **170** and **172** becomes available for use by the media player **174**. Additionally or alternatively, the functionality provided by the media player **174** may become available for use by the media device operatively coupled to the docking stations **170** and **172**. In most cases, a connector **186** of the media player **174** couples to a corresponding connector **188** within the media bay **180** when the media player **174** is placed in the inserted position. The media player **180** essentially becomes a fixed location device when coupled to the docking stations **170** and **172** through the media bay **180** (unless the docking station happens to be in another mobile device). When the media player **174** is taken out, it becomes mobile again. As should be appreciated, the docking stations **172** and **174** let a user simultaneously enjoy expansion possibilities with the portability of a smaller device.

[**0067**] The media bays **180** of the docking stations **170** and **172** may be widely varied. In most cases, the media bay openings **182** are dimensioned to receive the media players **174**. That is, the inner peripheral surfaces of the media bay openings **182** are sized to receive the outer peripheral surfaces of the media player **174** (allowing for some tolerances). In **FIG. 3**, the media bay **180** is configured to receive the back end of the media player **174** while in **FIG. 4** the media bay **180** is configured to receive a bottom end of the media player **174**. In either case, the connector **186** on the media player **174** is configured to connect with the connector **188** on the docking station **170** and **172** when the media player **174** is inserted in the media bay **180**. The position of the inserted media player **174** relative to the housing **178** may be widely varied. For example, the media bay **180** may be configured to receive the entire media player **174** as

shown in **FIG. 3** or it may only be configured to receive a portion of the media player **174** as shown in **FIG. 4**.

[**0068**] The inserted media player **174** is typically retained within the media bay **180** until it is removed from the media bay **180** (e.g., doesn't slide out). For example, a retention mechanism such as a snap, a spring loaded latch or a magnet may be used to hold the media player **174** within the media bay opening **182**. The media player **174** may also be held within the opening **182** by the force of the engaged connectors **186**/**188** or under its own weight (e.g., gravity). An ejection mechanism may additionally be used to release the media player **174** from the media bay **180** (e.g., to overcome any holding forces). In some cases (as shown in **FIG. 3**), the user interface **175** of the media player **174** is completely exposed to the user so that it is accessible to a user while inserted in the media bay **180**. In cases such as these, the user interface **175** (e.g., front surface of the media player) may be recessed below, level with, or extend above the external surface of the housing **178**. In the illustrated embodiment of **FIG. 3**, the front surface **190** of the media player **174** is substantially flush with the external surface **184** of the housing **178**.

[**0069**] **FIG. 5** is a block diagram of a media player/docking station system **200**, in accordance with one embodiment of the present invention. The system **200** generally includes a media player **202** and a docking station **204**. By way of example, the media player and docking station may correspond to the media player and docking station shown in **FIGS. 3 and 4**. As shown, the media player **202** includes a processor **206** (e.g., CPU or microprocessor) configured to execute instructions and to carry out operations associated with the media player **202**. For example, using instructions retrieved for example from memory, the processor **206** may control the reception and manipulation of input and output data between components of the media player **202**. In most cases, the processor **206** executes instruction under the control of an operating system or other software. The processor **206** can be a single-chip processor or can be implemented with multiple components.

[**0070**] In most cases, the processor **206** together with an operating system operates to execute computer code and produce and use data. The computer code and data may reside within a program storage block **208** that is operatively coupled to the processor **206**. Program storage block **208** generally provides a place to hold data that is being used by the system **200**. By way of example, the program storage block **208** may include Read-Only Memory (ROM), Random-Access Memory (RAM), hard disk drive, flash memory and/or the like. As is generally well known, RAM is used by the processor as a general storage area and as scratch-pad memory, and can also be used to store input data and processed data. ROM can be used to store instructions or program code followed by the processor as well as other data. Hard disk drives can be used to store various types of data and can permit fast access to large amounts of stored data. The computer code and data could also reside on a removable program medium and loaded or installed onto the computer system when needed.

[**0071**] In one embodiment, program storage block **208** is configured to store an audio program for controlling the distribution of audio in the media player **202**. The audio program may contain song lists associated with songs also stored in the storage block **208**. The songs may be accessed through a user interface **210** operatively coupled to the processor **206**. The user interface **210** may include a display for visually displaying the song lists (as part of a GUI interface) and a touch pad or buttons for selecting a song to be played or reviewing and/or customizing the song lists, i.e., the user may quickly and conveniently review the lists and make changes or selections thereto.

[**0072**] The media player also includes an input/output (I/O) controller **212** that is operatively coupled to the processor **206**. The (I/O) controller **212** may be integrated with the processor **206** or it may be a separate component as shown. The I/O controller **212** is generally configured to control interactions with one or more media devices **214** that can be coupled to the media player **202**. The I/O controller **212** generally operates by exchanging data (and/or power) between the media player **202** and the media devices **214** that desire to communicate with the media player **202**. In some cases, the media devices **214** may be connected to the I/O controller **212** through wired connections and in other cases the media devices **214** may be connected to the I/O controller **212** through wireless connections. In the illustrated embodiment, the media device **214** is capable of being connected to the I/O controller **212** through a wired connection.

[**0073**] The media player **202** also includes a connector **216** capable of connecting to a corresponding connector **218** located within the docking station **204**. The docking station **204** is operatively coupled to the media device **214** through transfer circuitry **220**. The transfer circuitry **220** may provide a direct or indirect link to the media device **214**. For example, the transfer circuitry **220** may be hard wired to the media device **214** as for example when the docking station **204** is integrated with the media device **214** or it may be passively wired as through a cord that temporarily plugs into the media device **214**.

[**0074**] The connector arrangement **216**/**218** used to connect the media player **202** and the docking station **204** may be widely varied. However, in the illustrated embodiment, the connector arrangement **216**/**218** includes both power and data contacts. The power contacts **222** of the media player **202** are operatively coupled to a battery **224** of the media player **202** and the data contacts **226** of the media player **202** are operatively coupled to the I/O controller **212**. As should be appreciated, the power contacts **222**A of the connector **216** are configured to engage the power contacts **222**B of the connector **218** so as to provide operational or charging power to the media player **202**, and the data contacts **226**A of the connector **216** are configured to engage the data contacts **226**B of the connector **218** so as to provide data transmissions to and from the media player **202**. The data contacts may be widely varied. For example, they may be configured to provide one or more data transmitting functionalities including Firewire, USB, USB 2.0, Ethernet, and the like. The connectors may also include a variety of other contacts **230** for transmitting other types of data as for example remote control, video (in/out), audio (in/out), analog TV, and the like.

[**0075**] **FIGS. 6A and 6B** are diagrams of a connector assembly pin arrangement **235**, in accordance with one embodiment of the present invention. As shown, the arrangement **235** includes a first connector **236** and a second

connector **238**. The connectors **236** and **238** may be placed in a media player, docking station, at the end of a cord or cable and/or the like. By way of example, the connectors **236** and **238** may generally correspond to the connectors **216**/**218** of **FIG. 5**. The first and second connectors **236** and **238** each include a housing **240** and **242** and a plurality of corresponding contacts **244** and **246** that when engaged operatively couple the connectors **236** and **238** together. The housing is generally formed from an insulating material such as plastic and the contacts are generally formed from an electrically conductive material such as a copper alloy. In the illustrated embodiment, the contacts **244** protrude from the housing **240** for insertion into corresponding contacts **246** that are recessed within the housing **242** (e.g., male-female connection). In some cases, the contacts **244** are configured to snugly fit into the contacts **246** so that the connectors are held together. Additionally or alternatively, the connectors **236** and **238** may include a locking means for locking the connectors together. For example, one of the connectors may include a latch that engages and disengages to and from a portion of the other connector. The configuration of the contacts may be widely varied (e.g., spacing, # of rows or columns, etc.). In the illustrated embodiment, the contacts are spaced apart in a single row. The connectors may be manufactured using a variety of techniques. By way of example, the connectors may be manufactured using techniques similar to those used by JAE of Japan.

[**0076**] The signals carried by the contacts may be widely varied. For example, a portion of the contacts may be dedicated to Firewire signals while another portion may be dedicated to USB signals. The contacts may also be used for grounds, charging, powering, protocols, accessory identification, audio, line-in, line-out, and the like. Additional contacts may be used for grounding the housing of the connector. The number of contacts may also be widely varied. The number generally depends on the signals needed to support the devices using the connectors. In one embodiment, some of the contacts are used to support Firewire while other contacts are used to support USB. In this embodiment, the minimum number of contacts corresponds to the number required to support these devices. In most cases, however, the number of contacts tends to be greater than this number (other signals are needed). In the illustrated embodiment, each of the connectors includes at least 30 contacts, including Firewire contacts, USB contacts, grounding contacts, powering contacts, reserved contacts and the like. An example of a pin count which may used can be seen in **FIG. 6C**. Although this pin count is shown, it should be noted that it is not a limitation and that any configuration of the functions described therein may be used.

[**0077**] FIGS. **7**A-E are diagrams of a stand alone docking station **250**, in accordance with one embodiment of the present invention. The stand alone docking station **250** allows a media player **252** to communicate with other media devices (not shown). By stand alone, it is meant that it is physically separated from but operatively connectable to the media device (rather than being integrated therewith). As shown, the docking station **250** includes a housing **254** that encloses internally various electrical and structural components and that defines the shape or form of the docking station **250**. The shape of the housing may be widely varied. For example, it may be rectangular, circular, triangular, cubical, and the like. In the illustrated embodiment, the housing **254** has a rectangular shape. The housing **254** may be formed by one or more housing components. For example, as shown, the housing **254** may be made up of a top member **256** and a base member **258**. The manner in which the members **256** and **258** are connected may be widely varied (e.g., screws, bolts, snaps, latch, etc.).

[**0078**] Within a top surface **260** of the housing as shown in **FIG. 7A, 7B** and **7**E there is provided a media bay opening **262** for physically receiving a bottom portion **264** of the media player **252**. As shown, the media bay opening **262** has shape that coincides with the shape of the media player **252**, i.e., the bottom portion **264** of the media player **252** may be inserted within the media bay opening **262**. The depth of the opening **262** is generally configured to keep the user interface of the media player **252** exposed to the user. The opening **262** may be vertical or sloped. As shown in **FIG. 7E**, the opening **262** is sloped so that the media player **252** rests in a tilted position within the docking station **250**. As should be appreciated, a tilted media player **252** is easier to use (e.g., more ergonomic). The slope may be widely varied. For example, it may tilt the media player **252** about 5 to about 25 degrees and more particularly about 15 degrees.

[**0079**] Inside the opening **262** there is provided a first connector **266** for engaging a corresponding connector disposed on the bottom surface of the media player **252**. The first connector **266** is typically exposed through the housing **254** so that the media player connector can engage it. By way of example, the connector arrangement may correspond to the connector arrangement shown in **FIG. 6**. In the illustrated embodiment, the media player connector is a female port and the docking station connector **266** is a male plug. The plug is generally dimension for a tight fit within the port so as to secure the connection between the media player **252** and the docking station **250** (e.g., no interlock except for connector). The first connector **266** is generally sloped to a similar angle as the opening **262** so that engagement occurs between the first connector and the media player connector when the media player **252** is slid into the opening **262**. As should be appreciated, the sides of the opening **262** serve as guides for placing the connectors in the correct engagement position.

[**0080**] The first connector **266** may be operatively coupled to one or more second connectors, each of which may be used to connect to some external device such as a media device, power plug and the like. In some cases, the information passing through the first connector **266** is directed to a single second connector while in other cases the information is split into multiple second connectors. For example, the contacts of a single connector **266** may be split into different connectors such as one or more data lines, power lines, audio lines and the like. The second connectors may be similar to the first connector or they may be different. Furthermore, multiple second connectors may be similar or they may be different from one another. The second connectors are also exposed through the housing. In some cases, the second connectors are indirectly coupled to the docking station **250**. For example, they may be coupled to the docking station **250** through a cord or cable that is attached to the docking station **250**. One end of the cord is coupled to the docking station **250** while the other end, which includes the second connector is free to be engaged with an external device. In other cases, the second connectors are

directly coupled to the docking station **250**. For example, they may be attached to a portion of the docking station **250** without using a cord or cable. In cases such as these, the second connectors are free to be engaged directly to an external device or they may be coupled through a removable cord or cable. Alternatively or additionally, the cord it self may be used to split information, i.e., a Y cord or cable.

[**0081**] The internal components of the docking station **250** can best seen in **FIG. 7C**. **FIG. 7C** shows the docking station **250** with the top member **256** of the housing **254** removed. As shown, the internal components include at least a first connector **266** and a second connector **268** (both of which may correspond to a connector arrangement shown in **FIG. 6**). The internal components may also include an audio out connector **270**. The connectors **266-270** are connected via a flex cable **272**. The connectors **266-270** are positioned on one or more printed circuit boards **274** that are attached to the base member **258** of the housing **254**. The first connector **266** is located at a position that places it within the opening **262** of the housing **254** (as shown in **FIG. 7B**). The second connector **268** and the audio out connector **270** are located at positions that place them within openings **276** at the backside of the housing **254** for external connection therefrom (as shown in **FIG. 7D**). Also contained within the housing **254** is a ballast **278** enabling the docking station **250** to support the media player **252** when inserted therein. An EMI shield may also be placed over the flex cable **272** to provide shielding.

[**0082**] **FIG. 8** is an illustration showing the docking station **250** of **FIG. 7** in use, in accordance with one embodiment of the present invention. As shown, the docking station **250** is operatively coupled to a media device **280** through a cable **282**, i.e., the first end of the cable **282** is engaged with the second connector **268** of the docking station **250** and the second end of the cable **282** is engaged with a connector positioned on the media device **280**. Furthermore, the media player **252** is operatively coupled to the docking station **250** via the above mentioned connector arrangement, i.e., the media player **252** is positioned in the media bay opening **262** of the docking station **250** such that the connectors are engaged. Through these connections, the media player **252** may communicate with the media device **280**, i.e., data and/or power may be passed therebetween. In the illustrated embodiment, the media player **252** is a music player and the media device **280** is a desktop computer. As such, the user, for example using the user interface on the media player **252**, may upload or down load songs between the media player **252** and the desktop computer **280** via the docking station **250**. When uploading and downloading are completed, the user may simply remove the media player **252** from the docking station **250** and walk away.

[**0083**] **FIGS. 9A-9C** are diagrams of cable adapters **300**, **302** and **304**, respectively, that may be used with the docking station **250** of **FIG. 7**, in accordance with several embodiments of the present invention. In all three figures, the cable adapters **300**, **302** and **304** include a docking station connector **306**. The docking station connector **306** is configured to be received by the second connector **268** of the docking station **250**. Although this connector arrangement may be widely varied, in the illustrated embodiment, the connector arrangement corresponds to the connector arrangement shown in **FIG. 6**.

[**0084**] As shown in **FIG. 9A**, the cable adapter **300** includes a cable **308**. The docking station connector **306** is disposed at one end of the cable **308** and a media device connector **310** is disposed at the other end of the cable **308**. The media device connector **310** may be widely varied. For example, it may correspond to a power connector, a Firewire connector, a USB connector and the like. It may also correspond to a connector similar to the docking station connector. In the illustrated embodiment, the media device connector **310** is a Firewire connector. An example of a cable adapter **300** including a docking station connector **306** using the pin count of **FIG. 6C** and a media device connector **310** using a **6** pin Firewire is shown in **FIG. 9D**.

[**0085**] Referring to **FIG. 9B**, the cable adapter **302** includes a pair of cables **312** and **314**. The docking station connector **306** is disposed at one end of the cables **312** and **314** and a plurality of media device connectors **316** are disposed at the other ends of the cables **312** and **314**. Each of the media device connectors **312** and **314** may be widely varied. For example, they may correspond to a power connector, a Firewire connector, a USB connector and the like. In the illustrated embodiment, the first media device connector **316**A is a power connector and the second media device connector **316**B is a USB connector.

[**0086**] As shown in **FIG. 9C**, the cable adapter **304** is configured to be used with a car stereo. The cable adapter includes a cable **318**. The docking station connector **306** is disposed at one end of the cable **318** and a media device connector **320** is disposed at the other end of the cable **318**. In this particular embodiment, the media device connector **320** is in the form of a cassette for insertion into a cassette deck of the car stereo. The cable adapter **304** also includes a power adapter plug **322** configured for insertion into a car power jack (e.g., cigarette lighter). The power adapter plug **322** extends from the docking station connector **306**. In order to use the cable adapter **304**, the user simply places the power adapter plug **322** in the power jack (this supports the docking station as well as provides power therethrough for powering or charging the media player) and the media device connector **320** in the cassette deck of the car stereo. The user may then select a song to be played through the car stereo using the user interface of the media player.

[**0087**] Although the cable adapters are shown as separate components of the docking station, it should be noted that in some embodiments they may be integrated therewith. That is, instead of having a docking station connector, the ends of the cables may be attached to the docking station.

[**0088**] Referring to **FIGS. 10-14**, integrated docking stations will be described in greater detail. Like stand alone docking stations, the integrated docking stations allow a media player to communicate with other media devices. However, unlike the stand alone docking station, the integrated docking station is integrated with or built into the media device. As should be appreciated, the electrical and structural components of the integrated docking station are typically enclosed via the housing of the media device, i.e., the docking stations do not have their own housing. The housing of the media devices also typically defines the media bay in which the media player is placed for connectivity to the media device. That is, the media devices themselves include one or more media bays for receiving the media players. The media bays are typically externally

accessible to the media players so that media players can be easily be inserted into or removed from the media bays. The media bays may be any of those previously described. The removability of the media players allows the media player to support a variety of different types of media devices in a flexible manner. By way of example, the media devices may correspond to desktop computers, notebook computers, home sound systems, car sound systems, portable sound systems, home theater systems, video projectors, displays, audio or video recording equipment, cameras (e.g., photos, video), telephones, and the like. They may also include peripheral computing devices such as scanners, printers, keyboards, and the like.

[0089] **FIG. 10** is a notebook computer **350** with an integrated docking station **352**, in accordance with one embodiment of the present invention. The notebook computer **350** includes a lid **354** and a base **356**. The docking station **352** is integrated within the base **356**. The docking station **352** includes a media bay **358** that may be placed anywhere on the base **356**, as for example, the sides, top, front, back or bottom surfaces. The media bay **358** may be configured to receive any surface of a media player **359** so long as a connection is made between the media player **359** and the docking station **352**. For example, it may be configured to receive the back of the media player as shown in **FIG. 3** or it may be configured to receive the bottom of the media player as shown in **FIG. 4**. In the illustrated embodiment, the media bay **358** is configured to receive the back side of the media player **359** thus exposing the user interface of the media player **359** to the user. In some cases, the user interface may be the primary user interface of the notebook computer **350**. For example, the touch pad of the media player shown in **FIG. 1** may be used to perform actions on the notebook computer **350**. By way of example, the notebook computer may correspond to any of those manufactured by Apple Computer of Cupertino, Calif.

[0090] **FIG. 11** is a perspective diagram of a general purpose computer **360** with an integrated docking station **362**, in accordance with one embodiment of the present invention. The computer **360** generally includes a base **364** and a display **366** operatively coupled to the base **364**. The base **364** and the display **366** may be separate components, i.e., they each have their own housing, as in traditional computers or they may be integrated into a single housing so as form an all in one machine (as shown). The docking station **362** is integrated within the base **364**. The docking station **362** includes a media bay **368** that may be placed anywhere on the base, as for example, the sides, top, front, back or bottom surfaces. The media bay **368** may be configured to receive any surface of a media player **369** so long as a connection is made between the media player **369** and the docking station **362**. For example, it may be configured to receive the back of the media player as shown in **FIG. 3** or it may be configured to receive the bottom of the media player as shown in **FIG. 4**. In the illustrated embodiment, the media bay **368** is configured to receive the bottom side of the media player **369**. In some cases, the user interface of the media player **369** may be exposed and in other cases, the user interface may be completely covered within the media bay **358**. By way of example, the general purpose computer may correspond to any of those manufactured by Apple Computer of Cupertino, Calif.

[0091] **FIG. 12** is front view of a sound system **370** with an integrated docking station **372**, in accordance with one embodiment of the present invention. The sound system may be widely varied. For example, it may be a substantially fixed or portable unit. In the illustrated embodiment, the sound system **370** is a flat panel unit that includes a base **374** and a pair of speakers **376**. The docking station **372** is integrated within the base **374**. The docking station **372** includes a media bay **378** that may be placed anywhere on the base **374**, as for example, the sides, top, front, back or bottom surfaces. The media bay **378** may be configured to receive any surface of a media player **379** so long as a connection is made between the media player **379** and the docking station **372**. For example, it may be configured to receive the back of the media player as shown in **FIG. 3** or it may be configured to receive the bottom of the media player as shown in **FIG. 4**. In the illustrated embodiment, the media bay **378** is configured to receive the back side of the media player **379**. In some cases, the user interface of the media player **379** may be the primary user interface of the sound system **370** and in other cases, the user interface is secondary to a user interface of the sound system **370**.

[0092] **FIG. 13** is a photo display **380** with an integrated docking station **382**, in accordance with one embodiment of the present invention. The photo display **380** is configured to showcase one or more images. For example, the photo display may be set on a desk or placed on a wall to display one or more family photos in a controlled manner. The photo display **380** generally includes a base **384** and a display **386** that is disposed in the base **384**. The docking station **382** is integrated within the base **384**. The docking station **382** includes a media bay **388** that may be placed anywhere on the base **384**, as for example, the sides, top, front, back or bottom surfaces. The media bay **388** may be configured to receive any surface of a media player **389** so long as a connection is made between the media player **389** and the docking station **382**. For example, it may be configured to receive the back of the media player as shown in **FIG. 3** or it may be configured to receive the bottom of the media player as shown in **FIG. 4**. In the illustrated embodiment, the media bay **388** is configured to receive the back side of the media player **389**. In some cases, the user interface of the media player **389** may be the primary user interface of the photo display system and in other cases, the user interface is secondary to a user interface of the photo display system.

[0093] **FIG. 14** is a mobile radio **390** with an integrated docking station **392**, in accordance with one embodiment of the present invention. The mobile radio allows a user to connect to other users in a local area, as for example when two parties are outdoors in different locations. For example, the mobile radio may provide voice communications, messaging (pager, email), digital one way radio (one to one and group), digital two way radio (one to one and group), data services (wireless web and private networks). In one embodiment, the mobile radio **390** allows a media player **399** to act as a mobile broadcasting station. For example, the user may broadcast music from the media player **399** to other media devices in a local area or within a local network. The mobile radio **390** generally includes a base **394** that includes the radio broadcast components (e.g., antenna, transmitter, receiver, volume controls, squelch controls, frequency controls, etc.).

[0094] The docking station **392** is integrated within the base **394**. The docking station **392** includes a media bay **398** that may be placed anywhere on the base, as for example, the sides, top, front, back or bottom surfaces. The media bay **398** may be configured to receive any surface of the media player **399** so long as a connection is made between the media player **399** and the docking station **392**. For example, it may be configured to receive the back of the media player as shown in **FIG. 3** or it may be configured to receive the bottom of the media player as shown in **FIG. 4**. In the illustrated embodiment, the media bay **398** is configured to receive the back side of the media player **399** so that the user interface is exposed to the user. As such, the user may select a song and thereafter broadcast it to other users in the network.

[0095] Although the mobile radio and media device are shown as separate devices, it should be noted that they may be integrated thus eliminating the need for a docking station. For example, the radio broadcasting components such as receivers, transmitters, microphones, speakers and the like may be built into the media player as for example the media player shown in **FIG. 1**. The radio broadcasting components may be widely varied. For example, they may be associated with technologies including FM, RF, Bluetooth, 802.11 UWB (ultra wide band), IR, magnetic link (induction) and/or the like.

[0096] **FIG. 15** is a diagram of a wireless communication system **400**, in accordance with one embodiment of the present invention. The wireless communication system **400** generally includes a media player **402** and one or more media devices **404**. The media player **402** is configured to send media via a wireless communication link **406** to the media devices **404** and the media devices **404** are configured to receive the media sent by the media player **402** over the wireless communication link **406**. The media player is essentially configured to act as a personal transmitting station so that the user can transmit media stored on the media player to other devices. In some cases, the media devices **404** may also send media to the media player **402** and the media player **402** may also receive media from the media devices **404**. By way of example, the media may generally correspond to audio, video, images, text and the like.

[0097] In order to send and receive media, the players and devices **402** and **404** generally include a transmitter, a receiver or a transceiver as well as some sort of antenna. The media is generally sent via the transmitter and the media is generally received via the receiver. In one embodiment, the media player includes a transmitter while the media devices include a receiver (for one way communications). In another embodiment, both devices include a transceiver (for two way communications). The antenna may be fully contained within the players/devices **402** and **404** or they may extend outside the devices (as shown). By way of example, the wireless communication link may correspond to FM, RF, Bluetooth, 802.11, UWB (ultra wide band), IR (infrared), magnetic link (induction) and/or the like.

[0098] The media player **402** may be widely varied. In the illustrated embodiment, the media player corresponds to the media player shown in **FIG. 1**. The media devices **404** may also be widely varied. These devices generally depend on the type of media being sent by the media player **402**. By way of example, the media devices **404** may generally correspond to a personal mobile radio **404**A, a personal tuning device **404**B, a personal display device **404**C, and the like. Personal generally refers to the fact that these devices pertain to a particular user. In one embodiment, these devices are handheld devices that are sized for placement into a pocket of the user. By being pocket sized, the user does not have to directly carry the device and therefore the device can be taken almost anywhere the user travels.

[0099] Personal mobile radios **404**A generally include a microphone and speaker (or audio jack) so as to allow voice communications. The mobile radios may be based on push to talk (PTT) whereby pressing a button opens the communication line from the mobile radio to the media player. The mobile radios typically include an antenna such as a rugged rubber duck that consists of a coiled up element encased in rubber. The mobile radios may also include a channel tuner for selecting which channel to receive and send information, and a volume control dial for adjusting the volume of the audio signal. The mobile radios may also include a small display showing the selected channel, received signal strength, output power and the like. Mobile radios are generally well known and will not be described in greater detail.

[0100] Personal tuning devices **404**B generally include a speaker (or headphone jack) and a volume control dial so as to listen to audio based media (e.g., music) being sent by the media player **402**. The personal tuning devices may also include an antenna and a frequency tuner for selecting which channel to receive and send information. In one embodiment, the personal tuning device **404**B corresponds to a radio (e.g., the media player may include an FM transmitter and the radio may include an FM receiver).

[0101] Personal display devices **404**C generally include a display so as to view video or imaged based media being sent by the media player **402**. In some cases, the personal display device **404**C additionally includes speakers and volume control so that both photos/video and audio based media may be received from the media player. The video or photos may be produced by the media player through a camera located thereon. The video or photos may also be stored in a storage component located within the media player. In one embodiment, the personal display device corresponds to a television or TV (e.g., the media player may include a VHF or UHF transmitter and the TV may include a VHF or UHF receiver).

[0102] The media devices may also include a media player **404**D, a notebook computer **404**E or a general purpose computer **404**F. The second media player **404**D may be similar to the first media player **402** or it may be a different device altogether. By way of example, the second media player **404**D may generally correspond to the media player shown in **FIG. 1**. Both the notebook computer **404**E and the general purpose computer **404**F may include the hardware necessary for communicating over the wireless communication link (e.g., antenna, receivers, transceivers) or they may be connected to a wireless hub **410** that includes the required hardware.

[0103] **FIG. 16** is a block diagram of a wireless communication system **420**, in accordance with one embodiment of the present invention. The system **420** generally includes a media player **422** and a media device **424** that connect via

a wireless communication link **426**. Both the media player **422** and the media device **424** may be widely varied. For ease of discussion, the media device **424** corresponds to a second media player that is similar to the first media player. Both media players include a processor **428** that is operatively coupled to a user interface **430**, a storage block **432**, input/output circuitry **434** and a communication terminal **436**.

[**0104**] The processor **428** is configured to execute instructions and to carry out operations associated with the media players **422**, **424**. For example, using instructions retrieved for example from memory, the processor **428** may control the reception and manipulation of input and output data between components of the media players **422**, **424**. In most cases, the processor **428** executes instruction under the control of an operating system or other software. The processor **428** can be a single-chip processor or can be implemented with multiple components.

[**0105**] The user interface **430** allows the user of the media players **422**, **424** to initiate actions on the media players **422**, **424** and provides the user with output associated with using the media players **422**, **424** (e.g., audio, video, images, etc.). The user interface **430** may be widely varied. By way of example, the user interface **430** may include switches, buttons, keys, dials, trackballs, joysticks, touch pads, touch screens, displays, microphones, speakers, cameras, and the like.

[**0106**] The storage block **432** provides a place to hold data that is being used by the media players **422**, **424**. By way of example, the storage block **432** may include Read-Only Memory (ROM), Random-Access Memory (RAM), hard disk drive, flash memory and/or the like. In the illustrated embodiment, the storage block includes at least a hard drive.

[**0107**] The input/output (I/O) support circuitry **434** controls interactions with one or more I/O devices **440** that can be coupled to the media players **422**, **424**. The I/O support circuitry **434** may be integrated with the processor **428** or it may be a separate component (as shown). The I/O support circuitry **434** generally operates by exchanging data (and/or power) between the media players **422**,**424** and the I/O devices **440** that desire to communicate with the media players **422**,**424**. In most cases, the I/O devices **440** may be connected to the I/O support circuitry **434** through one or more connectors, wires or cables. By way of example, the I/O devices **440** may be internal or peripheral devices such as other media players, notebook computers, personal digital assistants, general purpose computers, storage devices, additional user interfaces, audio equipment (e.g., speakers, headphones), video or imaging equipment (e.g., cameras), network cards, and the like. In the illustrated embodiment, the I/O device **440** corresponds to a head set. The head set may be connected to the media player through a headphone jack.

[**0108**] The communication terminal **436** controls interactions with one or more media devices **424** that can be coupled to the media player **422** through a wireless link. The communication terminal **436** may include a transmitter, receiver or transceiver. In one embodiment, the first media player **422** includes a transmitter and the second media player **424** includes a receiver thereby providing one way communication therebetween. In the illustrated embodiment, the first media player **422** includes a first transceiver and the second media player includes a second transceiver **424** for two way communication therebetween. The transmitter is configured to transmit information over the wireless communication link and the receiver is configured to receive information over the wireless communication link while the transceiver is configured to both transmit and receive information over the wireless communication link. The components of the receivers, transmitters and transceiver are generally well known within the technological filed from which they come (e.g., FM, RF, Bluetooth, 802.11 UWB, IR, magnetic link) and therefore they will not be described in greater detail.

[**0109**] **FIG. 17** is a flow diagram of a wireless transmission method **450**, in accordance with one embodiment of the present invention. The method may be implemented by a media player, as for example the media player shown in FIGS. **15** or **16**. The method generally begins at block **452** where a media item is selected. This is generally accomplished by user operating the media player via the user interface of the media player. Depending on the application, the user may conveniently move through a list of media items and thereafter make a selection once the desired media item is found. In the case of music, the user may scroll through a list of songs until a desired song is found. In the case of images, the user may move through a proof sheet until a desired image is found.

[**0110**] Following block **452**, the flow proceeds to block **454** where the remote recipients are selected. Remote recipients generally refer to other devices that are capable of receiving the selected media item from the media player. Selecting the remote recipients may include selecting a signal channel as for example in the case of a broadcast (e.g., FM) or selecting a desired address as for example in the case of a network connection (e.g., Bluetooth). In broadcasting, a media item is transmitted over airwaves for public reception by anyone with a receiver tuned to the right signal channel, i.e., the media item is cast or thrown in all directions at the same time. In networking, a media item is transmitted to one or more unique addresses, i.e., each media device has its own unique address. When utilizing broadcasting, the user may simply select a channel via the user interface of the media player. For example, the user of the media player may select FM 98.1 and therefore the user of the media device must select FM 98.1 in order to receive the media item. When utilizing networking, the user may select one or more addresses via the user interface of the media player. For example, the user may enter one or more unique address directly or the user may select one or more unique addresses from a preexisting group stored in the media player. In some cases, the unique addresses may be stored as a buddy list.

[**0111**] Following block **454**, the flow proceeds to block **456** where the media item(s) is transmitted. The media item may be transmitted locally to the media player and/or it may be transmitted wirelessly to the remote recipient. In most cases, the media item is transmitted to both the media player as well as to the remote recipients.

[**0112**] The various aspects of the method described above can be used alone or in various combinations. The method is preferably implemented by a combination of hardware and software, but can also be implemented in hardware or software. The method can also be embodied as computer readable code on a computer readable medium. The com-

puter readable medium is any data storage device that can store data which can thereafter be read by a computer system. Examples of the computer readable medium include read-only memory, random-access memory, hard drive, flash memory, CD-ROMs, DVDs, magnetic tape, optical data storage devices, and carrier waves.

[0113] **FIG. 18** is an illustration showing a personal transmitting station **500** in use, in accordance with one embodiment of the present invention. By way of example, the personal transmitting station **500** may correspond to the media player shown in **FIG. 1**. The personal transmitting station **500** is wirelessly connected to one or more personal media devices **502** through one or more wireless links **504**. These devices **500** and **502** are connected via a wireless communication signal such as any of those previously described.

[0114] Although the personal transmitting station **500** may be configured to transmit several types of data to the personal media devices **502**, in the illustrated embodiment, the personal transmitting station **500** is configured to transmit audio data in the form of music **502** (e.g., the personal transmitting station includes MP3 functionality for example) to one or more personal media devices **502** acting as personal tuning devices. As such, the user of the personal transmitting station **500** can perform disc jockey functions, i.e., the user can determine what songs to be played on both the personal transmitting station **500** as well as the personal tuning devices **502**.

[0115] In this particular illustration, a first skier **506** holds the personal transmitting station **500** while second, third and fourth skiers **508**, **510** and **512** each hold personal tuning devices **502**. As shown, the first skier **506** is located away from the second, third and fourth skiers **508**, **510** and **512**. The first skier **506** is located on a first hill **514**, the second and third skiers **508** and **510** are located on a ski lift **516**, and the fourth skier **502** is skiing down a second hill **518**. As should be appreciated, all of these locations are within the broadcasting or networking range of the personal transmitting station **500**.

[0116] The personal transmitting station **500** is configured to send a music signal to the personal tuning devices **502** held by the second, third and fourth skiers **508**, **510** and **512** and the personal tuning devices **502** are configured to receive the music signal sent from the personal transmitting station **500**. The first skier **506** can therefore effect changes to what is being listened to by the second, third and fourth skiers **508**, **510** and **512** by simply selecting a different song to be played on the personal transmitting station **500** (even though he is in a different location than the rest of the skiers). For example, the first skier **506** may end a first song and select a second song to be played therefore causing the personal transmitting station **500** to send the second song to the personal tuning devices **502**.

[0117] Both the personal transmitting station **500** as well as the personal tuning devices **502** include a means for outputting sound. For example, they may contain speakers or jacks for coupling to headphones. These devices may also include a means for adjusting the volume. For example, they may contain dials or buttons for increasing or decreasing the volume. In some cases, the personal tuning devices may include a means for making song requests, i.e., text messaging or voice communications.

[0118] While this invention has been described in terms of several preferred embodiments, there are alterations, permutations, and equivalents, which fall within the scope of this invention. For example, although the invention has been described in terms of an MP3 music player, it should be appreciated that certain features of the invention may also be applied to other types of media players such as video recorders, cameras, and the like. Furthermore, the MP3 music player described herein is not limited to the MP3 music format. Other audio formats such as MP3 VBR (variable bit rate), AIFF and WAV formats may be used. Moreover, certain aspects of the invention are not limited to handheld devices. For example, the touch pad may also be used in other computing devices such as a portable computer, personal digital assistants (PDA), cellular phones, and the like. The touch pad may also be used a stand alone input device that connects to a desktop or portable computer. It should also be noted that there are many alternative ways of implementing the methods and apparatuses of the present invention. For example, although the touch pad has been described in terms of being actuated by a finger, it should be noted that other objects may be used to actuate it in some cases. For example, a stylus or other object may be used in some configurations of the touch pad. It is therefore intended that the following appended claims be interpreted as including all such alterations, permutations, and equivalents as fall within the true spirit and scope of the present invention.

What is claimed is:

1. A docking station that allows a media player to communicate with other media devices, the media player having a media connector, the docking station comprising:

a housing;

a media bay disposed inside the housing, the media bay being capable of receiving the media player, the media bay including a media bay opening and a media bay connector, the media bay opening providing access to the media bay connector, the media bay connector being configured for removable engagement with the media connector of the media player, the media and media bay connectors providing a connection interface that allows data and power transmissions therethrough; and

one or more output connectors that are operatively coupled to the media bay connector, at least one of the output connectors being configured to allow data transmission therethrough for communication with the other media devices.

2. The docking station as recited in claim 1 wherein the connection interface includes a plurality of different interfaces, the different interfaces being selected from PS/2, serial, parallel, network, USB, and Firewire interfaces.

3. The docking station as recited in claim 2 wherein the different interfaces are further selected from remote, dedicated audio, dedicated video, dedicated charging or dedicated powering interfaces.

4. The docking station as recited in claim 3 wherein the different interfaces include at least two data interfaces.

5. The docking station as recited in claim 3 wherein the two data interfaces are USB and Firewire interfaces.

6. The docking station as recited in claim 1 wherein the media bay is configured to receive a back side of the media player.

7. The docking station as recited in claim 1 wherein the media bay is configured to receive a bottom end of the media player.

8. The docking station as recited in claim 1 wherein the media bay is configured to receive the entire media player.

9. The docking station as recited in claim 1 wherein the media bay is configured to receive a portion of the media player.

10. The docking station as recited in claim 1 wherein the media player is an MP3 music player, the MP3 music player having a hard drive for storing data associated with songs, the hard drive being operatively coupled to the media connector, and wherein the connector interface is configured to upload or download data associated with songs between the MP3 music player and the other media devices when the media connector of the MP3 music player is operatively coupled to the media bay connector of the docking station and when the output connector of the docking station is operatively coupled to the other media devices.

11. The docking station as recited in claim 1 wherein the docking station is a stand alone device.

12. The docking station as recited in claim 1 wherein the docking station is integrated with at least one media device, the media device being selected from a notebook computer, general purpose computer, sound system, photo display or mobile radio.

13. A wireless media player system, comprising

a hand held media player configured to transmit media over a wireless connection;

one or more media devices configured to receive media over the wireless connection.

14. The wireless media player system as recited in claim 13 wherein the hand held media player includes a transmitter, and wherein the one or more media devices includes a receiver capable of receiving transmissions from the transmitter.

15 The wireless media player system as recited in claim 13 wherein the hand held media player is configured to receive media over the wireless connection and wherein the one or more media devices are configured to transmit media over the wireless connection.

16. The wireless media player system as recited in claim 15 wherein the hand held media player and the one or more media devices each include a transceiver capable of receiving and transmitting media therebetween.

17. The wireless media player system as recited in claim 13 wherein the wireless connection is provided by one of FM, RF, Bluetooth, 802.11, UWB, IR and magnetic links.

18. The wireless media player system as recited in claim 11 wherein the hand held media player is selected from a music player, game player, video player and video camera and wherein the media devices are selected from other media players, desktop computers, notebook computers, PDAs, audio equipment, video equipment, peripheral devices, personal mobile radios, personal tuning devices or personal display devices.

19. The wireless media player system as recited in claim 18 wherein the hand held media player is a first music player and wherein at least one of the media devices is a second music player or a personal tuning device capable of processing audio communications.

20. The wireless media player system as recited in claim 19 wherein the music player is a MP3 music player.

21. The wireless media player system as recited in claim 19 wherein the first music player includes a transmitter for transmitting information over the wireless connection, the transmitter being configured to at least transmit a continuous music feed to one or more second music players or personal tuning devices that each include a receiver capable of receiving information from the transmitter over the wireless connection.

22. The wireless media player system as recited in claim 13 wherein the media player and one or more media devices each include a processor, a user interface, a storage block, input/output circuitry and a communication terminal.

23. The wireless media player system as recited in claim 22 wherein the storage block includes a hard drive.

24. A method of wirelessly connecting a hand held media player to another device, the method comprising:

selecting a media item on the hand held media player;

selecting one or more remote recipients on the hand held media player; and

transmitting the media item locally to the hand held media player, and wirelessly to the selected remote recipients.

25. A connector for use in a media player system, the connector comprising:

a housing; and

a plurality of spatially separated contacts mounted within the housing, a first set of contacts being appropriated for Firewire, a second set of contacts being appropriated for USB.

* * * * *