Trials@uspto.gov
571-272-7822

Paper 59
Date: August 13, 2024

UNITED STATES PATENT AND TRADEMARK OFFICE

BEFORE THE PATENT TRIAL AND APPEAL BOARD

ASSA ABLOY AB, ASSA ABLOY INC.,
HID GLOBAL CORPORATION,
ASSA ABLOY GLOBAL SOLUTIONS, INC., and
MASTER LOCK COMPANY, LLC
Petitioner,

v.

CPC PATENT TECHNOLOGIES PTY, LTD.,
Patent Owner.

IPR2022-01045 and IPR2022-01089
Patent 9,269,208 B2

Before SCOTT A. DANIELS, BARRY L. GROSSMAN, and
AMBER L. HAGY, *Administrative Patent Judges.*

GROSSMAN, *Administrative Patent Judge*.

JUDGMENT[1]
on Remand from Director's Review
Determining No Challenged Claims Unpatentable
35 U.S.C. § 318(a)

---

[1] This Judgment addresses the two proceedings listed above, which raise the same issues for different claims of the same patent. Unless specifically authorized by the Board, the parties are not authorized to use this style of filing.

I. INTRODUCTION

A. Director's Review

Our Original Final Written Decision (Paper 42)[2] in this case has been vacated following review by the Director and remanded to us: (1) for additional briefing by the parties on the construction of the claim term "biometric signal;" and (2) our further consideration of the construction of this claim term. Paper 44 ("Director's Decision" or "Dir. Dec.").

Petitioner submitted a Supplemental Brief After Remand addressing the construction of "biometric signal." Paper 54 ("Petitioner's Supplemental Claim Construction Brief" or "Pet. Supp. Br.").

Patent Owner submitted a Supplemental Response to Petitioner's Supplemental Claim Construction Brief. Paper 58 ("PO Supplemental Claim Construction Response" or "PO Supp. Resp.").

This same Director's Decision also was entered in IPR2022-01006, which is related to the cases now before us. *See* Paper 49 in the 01006 IPR proceeding.

Upon further consideration of the claim construction for the term "biometric signal," based on the supplemental briefing of the parties, and other evidence of record, we revise the construction of this term to be "a physical or behavioral biometric attribute." There is no persuasive intrinsic or extrinsic evidence to support Patent Owner's assertion that a biometric

[2] We cite to the record in IPR2022-01045, unless a specific citation to each Petition is required for clarity. Similar documents, generally having the identical exhibit or "Paper" number, were filed in each of the two proceedings to which this Decision applies.

signal, as disclosed and claimed in the ’705 patent, is limited only to physical attributes and thus excludes behavioral attributes.

The revised claim construction deletes the functional phrase “that provides secure access to a controlled item” in our original claim construction. Paper 42, 70. This functional phrase is unnecessary, and in fact, is redundant of language already in the challenged claims. The Director’s Decision also noted that “[n]either party’s proposed construction includes a requirement of ‘provid[ing] secure access to a controlled item.’” Dir. Dec. 6.

We also determine that there is no inconsistency between our revised claim construction in the proceedings before us and our claim construction of the term “biometric signal” in IPR2022-00601, challenging the ’208 patent, filed by Petitioner Apple, Inc. (the “’601 proceeding” or “’601 Apple IPR”) or IPR2022-00602, challenging Patent No. 9,665,705,[3] also filed by Petitioner Apple, Inc. (the “’602 proceeding” or “’602 Apple IPR”). The ’601 and ’602 proceedings involved a different petitioner. In the ’601 and ’602 Apple IPRs, the claim construction issue of whether a biometric signal includes *behavioral* attributes was never raised or suggested by either party.

We discuss these issues in more detail in Section III.C.2 of this Decision, our claim construction analysis.

Because the Director’s Decision vacated the entirety of our Original Final Written Decision and required that we “issue a new Final Written Decision” in each of the three proceedings involved in the Director’s Decision, we issue a new decision in this proceeding, addressing all issues.

---

[3] The ’705 patent is a continuation of the ’208 patent. The ’705 patent is challenged in IPR2022-01006, also remanded by the Director’s Decision.

B. Background and Summary

ASSA ABLOY AB, ASSA ABLOY Inc., HID Global Corporation, ASSA ABLOY Global Solutions, Inc., and Master Lock Company, LLC (collectively "Petitioner"[4]) filed two Petitions, collectively requesting *inter partes* review of claims 1–13 (the "challenged claims") of U.S. Patent No. 9,269,208 B2 (Ex. 1007 in each proceeding, "the '208 patent"). Paper 3, 3 ("Pet."). CPC Patent Technologies Pty Ltd. ("Patent Owner") filed a Preliminary Response to each Petition. Paper 8 ("Prelim. Resp."). With our authorization to address Patent Owner's arguments that the Petition is time-barred under 35 U.S.C. § 315(b) (*see* Paper 10), Petitioner filed a Reply (Paper 14 ("Prelim. Reply")); and Patent Owner filed a Preliminary Sur-Reply (Paper 18 ("Prelim. Sur-Reply")).

We entered a consolidated Decision allowing Petitioner to proceed with the two distinct Petitions and granting institution of an *inter partes* review of claims 1–13 based on all grounds asserted in the two Petitions. Paper 21 (the "Decision to Institute"). Our Decision to Institute addressed the issue of whether the Petition was time-barred, and determined on the

---

[4] The entities included as Petitioner have changed since we issued our Original Final Written Decision. *See* Paper 49; *see also Cradlepoint, Inc. et al v. 3G Licensing S.A.*, IPR2021-00639, Paper 12, 2 (PTAB May 13, 2021) ("[F]or each 'petition' there is but a single party filing the petition, no matter how many companies are listed as petitioner or petitioners and how many companies are identified as real parties-in-interest. . . . Even though the separate sub-entities regard and identify themselves as 'Petitioners,' before the Board they constitute and stand in the shoes of a single 'Petitioner. . . . they must speak with a single voice, in both written and oral representation.").

record at that time that there was no time bar. Paper 21 at 13–37. We also addressed the issue of patentability asserted in the Petition.

Patent Owner submitted a Response to the Decision to Institute. Paper 26 ("Patent Owner Response" or "PO Resp.").

Petitioner submitted a Reply. Paper 30 ("Reply").

Patent Owner submitted a Sur-reply. Paper 36 ("Sur-reply").

Petitioner submitted twenty-nine exhibits. *See* Exs. 1001–1015, 1017–1030[5] (there is no exhibit numbered 1016); *see also* Paper 39 (Petitioner's Updated Exhibit List). Petitioner relies on the Declaration testimony of Stuart Lipoff. *See* Exs. 1005, 1029.

Patent Owner submitted thirty-eight exhibits. *See* Exs. 2001–2018, 2023–2029, and 2031–2041[6] (there are no exhibits numbered 2019–2022 or 2030; Exhibit 2005 includes Parts 1, 2, and 3); *see also* Paper 40 (Patent Owner's Updated Exhibit List)[7]. Patent Owner relies on the Declaration testimony of Samuel Russ, Ph.D. *See* Exs. 2031, 2032.

A joint hearing was held September 28, 2023. *See* Paper 41 ("Transcript" or "Tr.").

We have jurisdiction under 35 U.S.C. § 6. We enter this Final Written Decision pursuant to 35 U.S.C. § 318(a) and 37 C.F.R. § 42.73.

---

[5] Exhibit 1030 is a demonstrative exhibit used at the final hearing. It is not an evidentiary exhibit. *See* PTAB Consolidated Trial Practice Guide, 84 (Nov. 2019 ("CTPG") ("Demonstrative exhibits used at the final hearing are aids to oral argument and not evidence.").

[6] Exhibit 2041 is a demonstrative exhibit used at the final hearing. It is not an evidentiary exhibit. *See id.*

[7] Exhibits 2029 and 2030 on Patent Owner's Exhibit list are inconsistent with the document filings at the Board. *See* Ex. 3009.

Petitioner has the burden of proving unpatentability of a claim by a preponderance of the evidence. 35 U.S.C. § 316(e).

Based on the findings and conclusions below, we determine that Petitioner has not established by a preponderance of the evidence that claims 1–13 are unpatentable. We also determine that the Petition is not barred by 35 U.S.C. § 315(b).

C. Real Parties-in-Interest

Petitioner identifies "ASSA ABLOY AB, ASSA ABLOY Inc., ASSA ABLOY Residential Group, Inc., HID Global Corporation, Master Lock Company, LLC, Fortune Brands Innovations, Inc., and ASSA ABLOY Global Solutions, Inc." as the real parties-in-interest. Paper 49.

Patent Owner identifies itself as the sole real party-in-interest. Paper 6, 2.

We note here that Patent Owner asserts that the Petition is time-barred under 35 U.S.C. § 315(b) because, as asserted by Patent Owner, Apple, Inc. ("Apple") is a real party-in-interest ("RPI") and/or privy of one or more of the individual companies that collectively comprise the Petitioner, and because Patent Owner served a complaint on Apple alleging infringement of the '208 patent more than 1 year before this Petition was filed. *See, e.g.*, PO Resp. 4, 46–64 (asserting that the Petition is time-barred under 35 U.S.C. § 315(b)). This argument would impact the underlying proceeding if we were to determine that Apple is a real party-in-interest or privy with Petitioner. *See Unified Patents, LLC v. MemoryWeb, LLC*, IPR2021-01413, Paper 76, 5 (PTAB May 22, 2023) (Decision granting Director review and (1) vacating the Board's real party-in-interest determination in the Final Written Decision, and (2) vacating the Board's

Order Identifying the asserted real party-in-interest). As stated in *Unified Patents v. MemoryWeb*,

> [t]he Board can and should make a determination of the real parties in-interest or privity in any proceeding in which that determination may impact the underlying proceeding, for example, but not limited to, a time bar under 35 U.S.C. § 315(b) or an estoppel under 35 U.S.C. § 315(e) that might apply.

Id. That is the situation here. Patent Owner asserts that there is a time bar. *See, e.g.*, PO Resp. 46–64. Thus, following the guidance in *Unified Patents v. MemoryWeb*, we consider in Section II whether Apple is a real party-in-interest, or privy, in this proceeding.

D. Related Matters

Petitioner identifies the following matters as being related to this proceeding:

1) *ASSA ABLOY AB, et al. v. CPC Patent Technologies Pty Ltd., et al.*, No. 3-22-cv-00694 (D. Conn.);

2) *CPC Patent Technologies Pty Ltd v. HMD Global Oy*,[8] WDTX-6-21-cv-00166-ADA (W.D. Tex.);

3) *CPC Patent Technologies Pty Ltd v. Apple Inc.*, No. 5:22-cv-02553-NC (N.D. Cal); and

4) IPR2022-00602 and IPR2022-00601, identified as pending IPR challenges filed by Apple against, respectively, the U.S. Patent No. 9,665,705 (the "'705 patent") and the '208 patent.

Pet. 2–3.

[8] Petitioner states HID Global, one of the named Petitioners in this IPR proceeding, and HMD Global, the named defendant in the cited litigation, "have no relation to one another." Pet. 2, n.2.

Patent Owner also identifies the above matters as related to the present IPR proceeding. Paper 6, 2–3. Patent Owner further identifies the following IPR proceedings: IPR2022-00600; IPR2022-01006; IPR2022-01093; and IPR2022-01094. *Id.*

E. The '208 Patent

We make the following findings regarding the disclosure of the '208 patent.

The '208 patent discloses a system "for providing secure access to a controlled item." Ex. 1007, Abstr. As stated in the disclosure, the system can also be used "to provide authorised access to lighting systems, building control devices, exterior or remote devices such as air compressors and so on." *Id.* at 15:38–40. "The concept of 'secure access' is thus extendible beyond mere access to restricted physical areas." *Id.* at 15:36–38. The disclosed system uses a database of "biometric signatures" (*id.*), such as a fingerprint (Ex. 1007, 1:29–30) for determining authorized access.

Figure 2 from the '208 patent is reproduced on the following page.

Figure 2 from the ’208 patent is reproduced below.

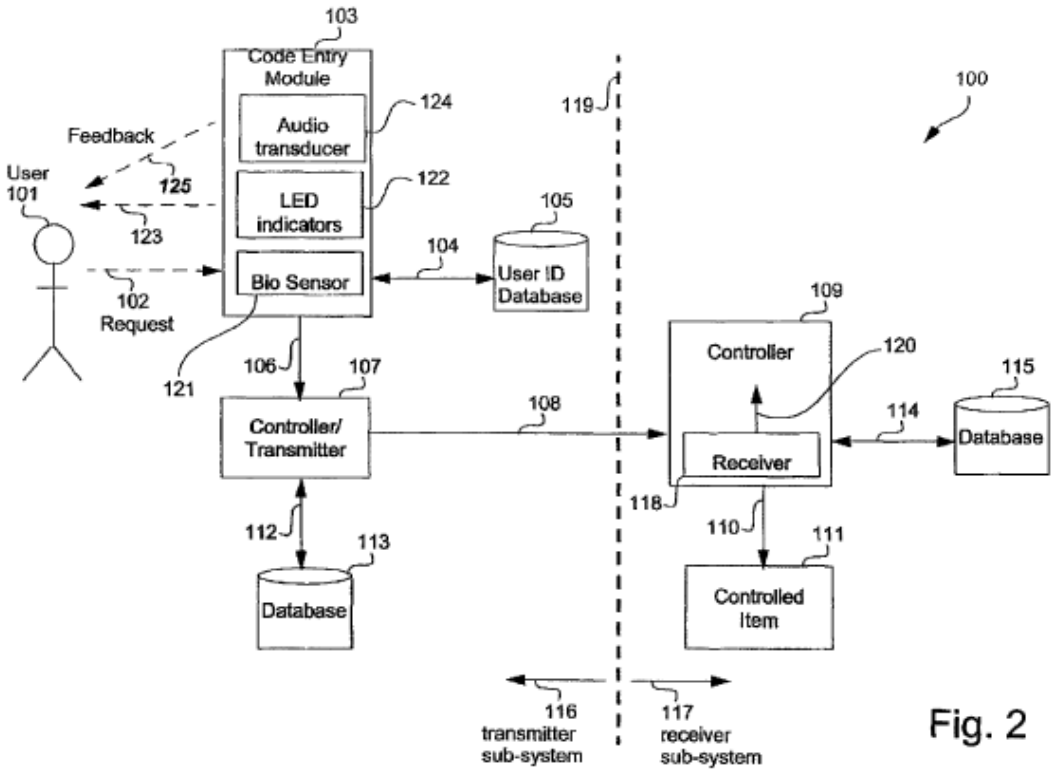

Fig. 2

Figure 2 is a functional block diagram of an arrangement for providing secure access according to the system disclosed in the ’208 patent. Ex. 1007, 5:15–16.

As described in the written description of the ’208 patent, and as illustrated generally in Figure 2, user 101 makes a request to code entry module 103. Code entry module 103 includes biometric sensor 121. *Id*. at 5:52–53. If biometric sensor 121 is a fingerprint sensor, for example, then the request “typically takes the form of a thumb press” on a sensor panel (not shown) on code entry module 103. *Id*. at 5:56–59.[9] “Other physical

[9] *See* Ex. 1007, 10:35–38 (“Although the present description refers to ‘Users’, in fact it is ‘fingers’ which are the operative entities in system operation *when the biometric sensor 121 (see FIG. 2) is a fingerprint*

attributes that can be used to provide biometric signals include voice, retinal or iris pattern, face pattern, [and] palm configuration." Ex. 1007, 1:30–32; *see also id.* at 16:25–27 (claim 4 stating "the biometric sensor is responsive to one of voice, retinal pattern, iris pattern, face pattern, and palm configuration").

Code entry module 103 then "interrogates" an authorized user identity database 105, which contains "biometric signatures" for authorized users, to determine if user 101 is an authorized user. *Id*. at 5:60–65. If user 101 is an authorized user, code entry module 103 sends a signal to "controller/transmitter" 107. *Id*. at 5:65–67.

Database 105 of authorized users is prepared by an "administrator." *Id.* at 10:38–42 ("The first user of the code entry module 103 . . . is automatically categorised[10] as an administrator."). This "first administrator" can direct the system 100 to either accept further administrators, or alternatively, to accept further "ordinary users." *Id.* at 10:28–34.[11]

---

sensor.") (emphasis added). Thus, it is clear that biometric sensor 121 is *not* limited to a fingerprint sensor.

[10] The Specification uses the British spelling, which we also use when quoting the Specification.

[11] The use of the phrase "ordinary users" at the cited portion of the written description (column 10, line 34) is somewhat misleading, and should, more accurately, refer to "authorized users." The written description states that "[t]he disclosed remote entry system can accommodate at least three classes of user, namely administrators, (ordinary) users, and duress users." Ex. 1001, 10:24–26; *see also id.* at 12:67–13:3 (stating "It is noted that all signatures stored in the database are tagged as belonging to one or more of the classes of administrator, ordinary user, and duress users."). A "duress" category signature indicates the user "is in a coercive situation." *Id.* at 11:32–37.

The process for enrolling authorized users is shown generally in Figure 8 and described in the related written description. *See* Ex. 1007, 12:39–13:3 (describing enrollment process 800). In order to add authorized biometric signatures of additional users to database 105, the administrator must set the system using "control information" or a "legal control signal." *Id.* at 10:45–56. When biometric sensor 121 is a fingerprint sensor, the legal control signal for adding new users may be activated by the administrator using a succession of finger presses to biometric sensor 121. *Id.* at 10:49–56. If these successive presses are of the appropriate duration, the appropriate quantity, and are input within a predetermined time, controller 107 accepts the presses "as potential control information" and checks the input information against a stored set of "legal control signals." *Id.* "In one arrangement, the control information is encoded by *either or both* (a) the number of finger presses and (b) the relative duration of the finger presses." *Id.* at 10:49–52 (emphasis added).

An example of this type of "control information" or "legal control signal" is "'dit, dit, dit, dah,' where 'dit' is a finger press of one second's duration . . . and 'dah' is a finger press of two second's duration." *Id.* at 10:57–63.[12]

After all authorized users have been added to database 105, in operation, the disclosed system and method compare biometric input signal 102 to database 105 of authorized biometric signatures to determine if user 101 is an authorized user. *Id.* at 5:60–65 ("Thus for example if the request

[12] We have not been directed to any persuasive evidence of how the enrollment process is activated by an administrator when the biometric sensor is something other than a fingerprint sensor.

102 is the thumb press on the biometric sensor panel 121 [producing a thumbprint] then the user database 105 contains biometric signatures [*i.e.,* thumbprints] for authorised users against which the request 102 can be authenticated.”).

If user 101 is an authorized user based on the inputs to code entry module 103, controller/transmitter 107 then sends “an access signal,” based on a “rolling code,” to controller 109. Ex. 1007, 6:1–5.

If controller 109 determines that the rolling code received is “legitimate,” then controller 109 sends a command to “controlled item 111,” which, for example “can be a door locking mechanism on a secure door, or an electronic key circuit in a personal computer” that is to be accessed by user 101. *Id*. at 6:7–16.

F. Illustrative Claim

Among the challenged claims in the ’045 Petition and the ’089 Petition, claims 1, 9, and 10 are independent claims. Independent claim 1 is directed to a “system for providing secure access to a controlled item.” Ex. 1007, 15:42–16:3. Independent claim 9 is directed to a “transmitter sub-system for operating in a system for providing secure access to a controlled item.” *Id*. at 16:64–17:18. Independent claim 10 is directed to a “method for providing secure access to a controlled item.” *Id*. at 17:19–18:13.

Independent claim 1 is illustrative and is reproduced below.

> 1. A system for providing secure access to a controlled item, the system comprising:
> a database of biometric signatures;
> a transmitter sub-system comprising:
> a biometric sensor for receiving a biometric signal;

> means for matching the biometric signal against members of the database of biometric signatures to thereby output an accessibility attribute; and
>
> means for emitting a secure access signal conveying information dependent upon said accessibility attribute; and
>
> a receiver sub-system comprising:
>
> means for receiving the transmitted secure access signal; and
>
> means for providing conditional access to the controlled item dependent upon said information,
>
> wherein the transmitter sub-system further comprises means for populating the data base of biometric signatures, the population means comprising:
>
> means for receiving a series of entries of the biometric signal, said series being characterised according to at least one of the number of said entries and a duration of each said entry;
>
> means for mapping said series into an instruction; and
>
> means for populating the data base according to the instruction,
>
> wherein the controlled item is one of: a locking mechanism of a physical access structure or an electronic lock on an electronic computing device.

Ex. 1007, 15:42–16:3.

G. Prior Art and Asserted Grounds

Petitioner asserts that the challenged claims are unpatentable based on following three grounds (Pet. 4):

	Claim(s) Challenged	35 U.S.C. §[13]	References/Bases
1	1, 3–5, 9, 10–13[14]	103	Bianco[15], Mathiassen-067[16] (1, 3–5, 9 in '045 petition; 10–13 in '089 petition)
2	2, 6, 7	103	Bianco, Mathiassen-067, Houvener[17] ('045 petition)
3	8	103	Bianco, Mathiassen-067, Houvener, Richmond[18] ('045 petition)

Petitioner relies on the declaration testimony of Stuart Lipoff (Ex. 1005; Ex. 1029) in support of these grounds.

[13] The Leahy-Smith America Invents Act ("AIA"), Pub. L. No. 112-29, 125 Stat. 284, 296–07 (2011), took effect on September 16, 2011. The changes to 35 U.S.C. §§ 102 and 103 in the AIA do not apply to any patent application filed before March 16, 2013. Because the application for the patent at issue in this proceeding has an effective filing date before March 16, 2013, we refer to the pre-AIA version of the statute.

[14] IPR 2022-01089 Petition, 4.

[15] Bianco et al., US 6,256,737 B1, issued July 3, 2001 (Ex. 1003, "Bianco").

[16] Mathiassen, WO 02/28067 A1, published Apr. 4, 2002 (Ex. 1004, "Mathiassen-067").

[17] Houvener et al., US 5,790,674, issued Aug. 4, 1998 (Ex. 1013, "Houvener").

[18] Richmond et al., US 6,856,237 B1, issued Feb. 15, 2005 (Ex. 1014, "Richmond").

II. REAL PARTY-IN-INTEREST SECTION 315(b) TIME BAR

We first address whether the Petition is time-barred.

Patent Owner asserts that the Petition should be denied as time-barred under 35 U.S.C. § 315(b) because Apple, an argued real party-in-interest or privy, was served with a complaint in *CPC Patent Technologies Pty Ltd. v. Apple, Inc.*, No. 6:21-cv-00165 (W.D. Tex., Waco Division) for infringement of the '208 patent on March 1, 2021, more than a year before the Petition was filed. PO Resp. 4, 46–64. As stated in Section I.B of this Decision, we considered Patent Owner's Section 315(b) defense in our Decision to Institute this IPR proceeding. *See* Paper 21 at 13–37.

One fundamental omission in Patent Owner's Response is that Patent Owner fails to cite any evidence establishing the date that Apple was served with a complaint alleging infringement of the patent. This evidence is in the record (*see* Exs. 2003, 2004), and was discussed in Patent Owner's Preliminary Response (*see* Prelim. Resp. 1), but was not cited in the Response.[19] This evidence also was cited and considered in our Decision to Institute this proceeding. *See* Dec. Inst. 13 ("There is no dispute that Apple was served with a complaint alleging infringement of the '208 patent on March 1, 2021" (citing Ex. 2003, 5; Ex. 2004)).

In general, the Federal Rules of Evidence apply to this proceeding. 37 C.F.R. § 42.62(a). Under Rule 201(b)(2) of the Federal Rules of

[19] Our Scheduling Order in this proceeding states "Patent Owner is cautioned that any arguments not raised in the response may be deemed waived." Paper 22 at 9.

Evidence, we take official notice[20] that Apple was served with a complaint alleging infringement of the '208 patent on March 1, 2021. *See* Ex. 2003, 5 (Complaint alleging as its "First Cause of Action" "Infringement of the '208 Patent"); Ex. 2004 (Affidavit of Service on Apple on March 1, 2021).

Under 35 U.S.C. § 315(b), an *inter partes* review "may not be instituted if the petition requesting the proceeding is filed more than 1 year after the date on which the petitioner, real party-in-interest, or privy of the petitioner is served with a complaint alleging infringement of the patent." *Applications in Internet Time, LLC v. RPX Corp.*, 897 F.3d 1336, 1346 (Fed. Cir. 2018) ("*AIT*").

Petitioner bears the burden of establishing that no RPI or privy was served with a complaint alleging infringement more than one year prior to the June 3, 2022, filing date (*see* Paper 5) of the Petition in this proceeding. *RPX v Applications in Internet Time, LLC*, IPR2015-01750, Paper 128 at 6–7 (PTAB (Oct. 2, 2020) (precedential), (rehearing denied, Paper 142, Dec. 4, 2020) ("*RPX*");[21] *see also Ventex Co., Ltd. v. Columbia Sportswear N. Am., Inc.*, IPR2017-00651, Paper 152 at 4–5 (PTAB Jan. 24, 2019) (precedential) (citing *Worlds Inc. v. Bungie, Inc.*, 903 F.3d 1237, 1242 (Fed. Cir. 2018).

In *Power Integrations, Inc. v. Semiconductor Components Industries, LLC*, 926 F.3d 1306, 1314 (Fed. Cir. 2019), the Federal Circuit stated,

> [t]he Board's decision under § 315(b) is whether to institute or not. The condition precedent for this decision is whether a time-

---

[20] *See* 37 C.F.R. § 42.62(c) stating that the term "Judicial notice" in the Federal Rules of Evidence means "official notice" in the context of an *inter partes* review proceeding.

[21] We cite to the public version of Board's decision following remand from the Federal Circuit in *AIT*. This same Decision also was entered in the related cases IPR2015-01751 and IPR2015-01752.

> barred party (a party that has been served with a complaint alleging infringement of the patent more than one year before the IPR was filed) is the petitioner, real party in interest, or privy of the petitioner.

There is no dispute that Apple was served with a complaint alleging infringement of the '208 patent on March 1, 2021, which is more than one year before the June 3, 2022 filing date (Paper 5) of the Petition in this proceeding. *See* Ex. 2003, 5 (Complaint alleging as its "First Cause of Action" "Infringement of the '208 Patent"); Ex. 2004, (Affidavit of Service on Apple on March 1, 2021). Thus, the dispositive issue before us under Section 315(b) is whether Apple is an RPI or privy with Petitioner.

A. The Petitioner Entities

Before addressing in detail Petitioner's relationship with Apple, and to put that relationship in its proper context, it is helpful to identify the parties that, collectively, are included as Petitioner, and their affiliates.

The individual companies that collectively are referred to as "Petitioner" are more than just an Apple supplier or business partner. ASSA ABLOY AB "is the parent company of several entities worldwide, that are leaders in the delivery of secure identity solutions for millions of customers throughout the world." Ex. 2007 ¶ 10. ASSA ABLOY AB is the ultimate parent company of ASSA ABLOY Inc. *Id.*

ASSA ABLOY Inc. is the main holding entity for ASSA ABLOY AB's North and South American assets and is "the immediate parent company of Yale, HID, and Hospitality." *Id.* ¶ 11; *see also id.* ¶¶ 6–9

(providing complete corporate citations for "Yale," "August," "HID," and "Hospitality). [22]

These companies provide "identity solutions used in a variety of applications, including physical access control, logical access control, access card printing and personalization, highly secure government identification, and commercial and residential opening solutions." Ex. 2007 ¶ 14. These products, solutions, and services "are sold through a well-established network of OEMs, developers, systems integrators, and distributors worldwide." *Id*.

"Yale protects millions of homes and businesses worldwide and is the brand behind locks of every design and function in over 125 countries." *Id.* ¶ 15.

"HID is a worldwide leader in trusted identity solutions. Its products range from physical access control products, like ID cards and readers for opening doors, to solutions for accessing digital networks, verifying transactions, and tracking assets." *Id.* ¶ 19.

"Hospitality similarly provides advanced electronic locking and access solutions to hotels, cruise ships, construction, critical infrastructure, education, senior care, and multi-family residential industries worldwide." *Id.* ¶ 20. "HID and Hospitality offer the HID Mobile Access and ASSA

---

[22] As noted above, Master Lock Company, LLC, has been added as a Petitioner and Fortune Brands Innovations, Inc., the parent company of Master Lock, has been added as a real party-in-interest. There is no additional evidence or argument concerning the Section 315(b) bar relating to Master Lock or Fortune Brands. We refer to "Yale" and "August" because they are affiliates of one or more of the entities that are Petitioner, and because they are referred to in the evidence cited in this Decision.

ABLOY Mobile Access software solutions, respectively. Each allows an individual's mobile device (e.g., smartphone or wearable) to be used to gain access to secured doors, gates, networks, services, and more." Ex 2007 ¶ 21.

Petitioner filed a Declaratory Judgment action against Patent Owner and its parent company based on Patent Owner's written allegations to Petitioner that one or more of the Petitioner companies infringe patents owned by Patent Owner, including the '208 patent challenged in this proceeding. *Id.* ¶¶ 58–73; Count II ("Declaratory Judgment of Non-infringement of the '208 Patent").

There also is no dispute that Petitioner and Apple have a sophisticated and substantive business relationship. *See, e.g.*, Ex. 2009 ("Apple Developer Program License Agreement"). Petitioner supplies products, which are locking systems, to Apple, which Apple then sells to consumers. Ex. 2027. Also, Apple's iPhone is one of the smartphone products that can be used with Petitioner's lock products. *Id.* Thus, Petitioner must design its locking products to interact with the iPhone operating system and software. Patent Owner asserts that this arrangement makes Apple a real party-in-interest and/or a privy with Petitioner. Petitioner, who has the burden of persuasion, disagrees.

As explained below, when considering the entirety of the evidentiary record, including evidence relating to the business model and operating relationship between Petitioner and Apple, and considering the equitable and practical considerations of the relationship between Petitioner and Apple, we determine that Apple is *not* an RPI or a privy of Petitioner.

We discuss below the evidence and arguments on which the parties rely.

B. RPI Status

Section 315(b) "is unambiguous: Congress intended that the term 'real party in interest' have its expansive common-law meaning." *AIT*, 897 F.3d at 1351. "Determining whether a non-party is a 'real party in interest' demands a flexible approach that takes into account both equitable and practical considerations, with an eye toward determining whether the non-party is a clear beneficiary that has a preexisting, established relationship with the petitioner." *Id.* As stated in *AIT*,

> a patent owner dragged into an IPR by a petitioner, who necessarily has an interest in canceling the patent owner's claims, should not be forced to defend against later judicial or administrative attacks on the same or related grounds by a party that is so closely related to the original petitioner as to qualify as a real party in interest.

Id. at 1350. The corollary to this principle is that a patent owner who sues, or threatens to sue, several independent and distinct entities should not be surprised when each mounts an independent and distinct defense, whether in a federal court, in a post-grant proceeding in the Patent and Trademark Office, or both.

This concept of avoiding repeated challenges of a patent by distinct, but related, parties also is supported in the legislative history of Section 315(b). *Id.*; *see also RPX*, Paper 128 at 8–9 (concluding that the legislative history supports the concepts that "the RPI and privity requirements were designed to avoid harassment [of patent owners] and preclude parties from getting 'two bites at the apple' by allowing such parties to avoid either the estoppel provision or the time-bar").

"The statutory terms 'real party in interest' and 'privy' are not defined in Title 35. However, they are well-established common law terms." *Power*

Integrations, 926 F.3d at 1315. The Federal Circuit has determined "that Congress intended to adopt common law principles to govern the scope of the section 315(b) one-year bar." *Id.* We therefore look "to common law *preclusion* principles for guidance" to determine whether a real party-in-interest or privity relationship exists. *Id.* (emphasis added).

Whether a party who is not a named participant in a given proceeding nonetheless constitutes a "real party-in-interest" or "privy" to that proceeding "is a highly fact-dependent question." Patent Trial and Appeal Board Consolidated Trial Practice Guide, November 2019 ("CTPG"), 13 (citing *Taylor v. Sturgell*, 553 U.S. 880 (2008) (summarizing common law *preclusion* principles)).[23] "[A]t a general level, the 'real party-in-interest' is the party that desires review of the patent." CTPG 14. Thus, the "real party-in-interest" may be the petitioner itself, and/or it may be the party or parties "at whose behest the petition has been filed." *Id*; *see AIT*, 897 F.3d at 1351 (citing the initial Trial Practice Guide, recognizing the "fact-dependent"

---

[23] The CTPG accurately identifies *Taylor* as focusing on "preclusion principles." *Power Integrations* also focuses on "preclusion principles." 926 F.3d at 1315. Indeed, *Taylor* did not use the term "privity" in its opinion. *See Taylor,* 553 U.S. at 894, n.8 ("The substantive legal relationships justifying preclusion are sometimes collectively referred to as 'privity.' . . . The term 'privity,' however, has also come to be used more broadly, as a way to express the conclusion that nonparty preclusion is appropriate on any ground. . . . To ward off confusion, we avoid using the term 'privity' in this opinion.") (internal citations omitted).
In *Taylor*, the Court vacated and remanded the appellate court's decision because "we disapprove *the theory of virtual representation* on which the decision below rested. The preclusive effects of a judgment in a federal-question case decided by a federal court should instead be determined according to the established grounds for nonparty *preclusion* described in this opinion." *Id.* at 904 (emphases added).

nature of the RPI inquiry, and explaining that the two questions lying at its heart are whether a non-party "desires review of the patent" and whether a petition has been filed at a nonparty's "behest"). A common meaning of "behest" is "because someone has ordered or requested it." *See* Ex. 3002.

As explained in *AIT*:

> [D]etermining whether a non-party is a "real party in interest" demands a flexible approach that takes into account both equitable and practical considerations, with an eye toward determining whether the non-party is a clear beneficiary that has a preexisting, established relationship with the petitioner. Indeed, the Trial Practice Guide . . . suggests that the agency understands the "fact-dependent" nature of this inquiry, explaining that the two questions lying at its heart are whether a non-party "desires review of the patent" and whether a petition has been filed at a nonparty's "behest."

897 F.3d at 1351 (quoting Patent Trial Practice Guide, 77 Fed. Reg. 48,756, 48759 (Aug. 14, 2012)); *accord* CTPG 13–14.

In *Uniloc 2017 LLC v. Facebook Inc.*, 989 F.3d 1018 (Fed. Cir. 2021), the Federal Circuit stated that:

> [Determining whether a party is a RPI] has no bright-line test—relevant considerations, however, may include, "whether a . . . party exercises [or could exercise] *control* over a petitioner's participation in a proceeding, or whether a . . . party is *funding* the proceeding or directing the proceeding.

Id. at 1028 (emphasis added) (quoting *AIT*, 897 F.3d at 1342, which cited "Office Patent Trial Practice Guide, 77 Fed. Reg. 48,756, 48,759 (Aug. 14, 2012)"); *see also* CTPG 16 ("A common consideration is whether the non-party exercised or could have exercised control over a party's participation in a proceeding [citing *Taylor*, 553 U.S. at 895]. The concept of control generally means that 'it should be enough that the nonparty has the actual

measure of control or opportunity to control that might reasonably be expected between two formal coparties.'" (citing 18A CHARLES ALAN WRIGHT, ARTHUR R. MILLER & EDWARD H. COOPER, FEDERAL PRACTICE & PROCEDURE § 4451 (2d ed. 2011) (hereinafter cited generally as "WRIGHT & MILLER")).

Thus, factors such as "control" and "funding" clearly are relevant. They are *not*, however, the sole, or dispositive, factors. *See* CTPG 17 (noting that "whether something less than complete funding and control suffices to justify similarly treating the party [as a real party-in-interest] requires consideration of the pertinent facts" (citing *Cal. Physicians Serv. v. Aoki Diabetes Research Inst.*, 163 Cal. App. 4th 1506, 1523–25 ("discussing the role of control in the 'privy' analysis, and observing that 'preclusion can apply even in the absence of such control'")).

Consistent with *Uniloc 2017*, and as further explained in the CTPG, "[c]ourts and commentators agree . . . that there is no 'bright-line test' for determining the necessary quantity or degree of participation to qualify as a 'real party-in-interest' or 'privy' based on the control concept." CTPG 16 (emphasis added) (citing *Gonzalez v. Banco Cent. Corp.*, 27 F.3d 751, 759 (1st Cir. 1994); WRIGHT &MILLER § 4451 ("The measure of control by a nonparty that justifies preclusion cannot be defined rigidly.")). As stated in *Gonzalez*, the evidence as a whole must establish that "the nonparty possessed effective control over a party's conduct . . . as measured from a practical, as opposed to a purely theoretical, standpoint." *Gonzalez*, 27 F.3d at 759. Theoretical, hypothetical, or speculative assertions about effective control, unsupported by evidence, are neither probative nor persuasive.

Additional relevant factors to those discussed above include: the non-party's relationship with the petitioner; the non-party's relationship to the petition itself, including the nature and/or degree of involvement in the filing; and the nature of the entity filing the petition. CTPG 17–18.

A party is not considered a real party-in-interest in an *inter partes* review solely because it is a joint defendant with a petitioner in a patent infringement suit or is part of a joint defense group with a petitioner in the suit. *Id.* Joint defendants sued for patent infringement have common interests in establishing that their products do not infringe and/or the asserted patent or patents are invalid. That common interest, however, does not, by itself, automatically establish a real party-interest or privy relationship. *Id.*

We consider all the various factors discussed in the legislative history, case law, and other authority and guidance cited above. No one factor is dispositive. *See* CTPG 18 ("In short, because rarely will one fact, standing alone, be determinative of the inquiry, the Office cannot prejudge the impact of a particular fact on whether a party is a 'real party-in-interest' or 'privy' of the petitioner.").

Patent Owner takes a different view of the criteria to establish status as a real party-in-interest. Patent Owner states:

> In this matter, Patent Owners' assertion that Apple is an RPI is not based on Apple's control (or lack thereof) over the IPR; rather, Patent Owner's contention is based upon the established, significant business relationship between Apple and Petitioners as concerns the technology at issue, coupled with the undeniable fact that Apple would be a clear beneficiary of an invalidity finding in this proceeding.

PO Resp. 49.

Additionally, Patent Owner further asserts that "[a]s is plainly stated in *AIT*, the RPI analysis must be made 'with an eye toward determining whether the non-party is a clear beneficiary that has a preexisting, established relationship with the petitioner.'" PO Resp. 48–49 (citing *AIT*, 897 F.3d at 1351).

Petitioner asserts that "Apple never knew the petition [in the two proceedings now before us] would be filed, never requested that it be filed, and never directed, controlled or contributed to it financially or otherwise." Reply 20–21. Petitioner also asserts that it filed the Petition in this proceeding "based on their own interests, without any consideration of Apple." *Id.* at 21. Additionally, Petitioner notes that "Apple has its own IPR petition challenging the patent-at-issue," and that Petitioner "likewise had no involvement in Apple's petition." *Id.*

We address below the parties' contentions.

1. Apple's Prior IPR Petition

As noted above in Section I.C (Related Matters), Apple timely filed its own petition, IPR2022-00601 challenging some, but not all, claims, of the '208 patent. *See Apple, Inc. v. CPC Patent Technologies, PTY, LTD.*, IPR2022-00601, Paper 1 (PTAB Feb. 23, 2022) (the "'601 Apple IPR"). The '601 Apple IPR challenges claims 1, 3–7, 9–11, and 13 of the '208 patent based on three references, Mathiassen-113, McKeeth, and Anderson. *Id.* The two Petitions now before us collectively challenge claims 1–9 and

10–13[24] of the '208 patent based on various combinations of four references, Bianco, Mathiassen-067[25], Houvener, and Richmond. Pet. 4.

In the '601 Apple IPR, the Board instituted trial on all asserted grounds and all asserted claims. '601 Apple IPR, Paper 11 (PTAB Sep. 28, 2022). On September 27, 2023, the Board issued its Final Written Decision in that proceeding, determining all challenged claims, claims 1, 3–7, 9–11, and 13, were unpatentable. *Id.* at Paper 31. Patent Owner requested Director Review of the Final Written Decision (*id.* at Paper 32), which was denied (*id.* at Paper 33).

In *Unified Patents v. Uniloc USA, Inc. et al*, IPR2018-00199, Paper 33 (PTAB May 31, 2019), the Board determined the fact that Apple, also asserted to be an unnamed RPI in that case, filed its own similar petition around the same time as the petitioner in that case "does not suggest Apple is an unnamed RPI. To the contrary, it suggests that Apple did not need Petitioner to file this Petition on its behalf, and chose to file its own similar petition, giving Apple control over its own proceeding." *Unified Patents*, IPR2018-00199, Paper 33, 9. Based on the record before us, a similar determination can be made here. The fact that Apple filed the '601 Apple

---

[24] As explained above, the '045 petition challenges claims 1–9, and the '089 petition challenges claims 10–13.

[25] The parties refer to the Mathiassen-067 reference in this proceeding as "Mathiassen." As explained in the introduction, we adopted the term Mathiassen-067 in this proceeding to correct confusion in our Decision to Institute between two different "Mathiassen" references, each labelled as "Ex. 1004," in two different, but related IPR proceedings. To avoid future confusion and to maintain consistency, we will modify the parties citation of Mathiassen-067 by using brackets (*e.g.*, Mathiassen[-067]) in any quotes from the parties referring to "Mathiassen."

petition on February, 23, 2022, about three months *before* the Petition in the case before us was filed, suggests that Apple did not need Petitioner to file the Petition in this case on its behalf, because Apple had previously filed its own similar petition, giving Apple control over its own proceeding.

We also note here that Petitioner filed its Petition because it was independently threatened with a law suit by Patent Owner based on an alleged infringement of the '208 patent and other patents, as explained in Petitioner's Declaratory Judgment complaint. *See* Ex. 2007.

2. Apple's Relationship to Petitioner

There is no dispute that Apple has a business relationship with Petitioner. Petitioner filed a Declaratory Judgment complaint against "CPC Patent Technologies Pty. Ltd." (Patent Owner in the proceeding before us) and "Charter Pacific Corporation Ltd." (collectively referred to in the complaint as "Charter Pacific"). Ex. 2007 ¶ 1. In the Declaratory Judgment complaint, Petitioner states "Charter Pacific is also engaged in an aggressive litigation campaign that includes Apple Inc. ("Apple"), *a business partner* of the ASSA ABLOY Entities." *Id.* ¶ 30 (emphasis added); *see also, e.g.*, *id.* ¶¶ 21, 43, 98–106 (referring to products sold by Petitioner to Apple).

The business relationship between Apple and Petitioner is that Petitioner, or one of the named entities collectively referred to as Petitioner, makes products that interface with Apple products and may be sold on Apple's website. For example, ASSA ABLOY Residential Group, Inc., a named entity included as a Petitioner in this proceeding, [26] makes and sells

[26] As a result of a corporate reorganization since our Original Decision, Master Lock Company, LLC, acquired assets from ASSA ABLOY Residential Group, Inc., "such that ASSA ABLOY Residential Group, Inc.,

security locks under the brand name "Yale." *See* Ex. 2007 ¶¶ 53–73 (discussing the infringement allegation against "Yale Smart Locks"); Ex. 2027 (screen shots from Apple's website concerning the "Yale Assure Lock SL Touchscreen Deadbolt"). As described, in Exhibit 2007, the Yale Assure Lock uses a software application ("App") on one's mobile phone, here on an iPhone sold by Apple, to lock and unlock doors. *E.g.*, Ex. 2007 ¶ 65 ("The download page for the Yale Access application identifies August as the developer in the Apple App Store"). The App is developed by Petitioner, or one of its business partners, and distributed to iPhone users through the Apple App store. Ex. 2027 (*see* page 1 stating "you can lock or check current status just by asking Siri").

Petitioner asserts that "Petitioners and Apple have a standard business relationship like that of over 34 million application developers on Apple's platform." Reply. 22 (citing Ex. 1023, 6–7, stating "[t]here are over 34M registered Apple Developers from 227 regions"). Also, at least one of the August Smart Lock family of products and Yale Assure Lock family of products were submitted to Apple for certification, which Apple requires of hundreds of MFi Program[27] participants, including Petitioner. Reply 25.

---

is no longer the most relevant business in this matter." Paper 49, 2. ASSA ABLOY Residential Group, Inc., remains, however, a real party-in-interest. *Id.*

[27] The acronym "MFi" refers to "Made for iPhone/iPod/iPad." *See* Ex. 3003. Apple's Developer Program License Agreement (Ex. 2009) defines "MFi Program" to mean "a separate Apple program that offers developers, among other things, a license to incorporate or use certain Apple technology in or with hardware accessories or devices for purposes of interfacing, communicating or otherwise interoperating with or controlling select Apple-branded products." Ex. 2009, 6; *see also* Ex. 2017 (explaining how the MFi program works); Ex. 3004 (summarizing who needs to join the

Petitioner does not dispute that it has accepted the "Apple Developer Program License Agreement" allowing it to use Apple software to develop applications for Apple products. *See* Ex. 2009. Exhibit 2009 is an 88-page document governing Petitioner's relationship with Apple. *Id.* Essentially, Petitioner sells its products with and through Apple, and creates software applications that allows those products to interface with Apple's iPhone and other Apple products. *See, e.g.,* Ex. 2027.

Our rules do *not* provide specifically for interrogatories between the parties. Our rules provide, however, that "[t]he parties may agree to additional discovery between themselves." 37 C.F.R. § 42.51(b)(2)(i). Apparently, Petitioner agreed to respond to interrogatories from Patent Owner. Petitioner asserts that its "verified responses to CPC's Interrogatories confirm that Apple never provided any direction, control, or financing in this proceeding." Reply 21 (citing Ex. 1022, responses to Interrogatories Nos. 3, 4).

Exhibit 1022 contains responses to five interrogatories posed by Patent Owner to Petitioner in this IPR proceeding and its related proceedings. Ex. 1022, 1 ("These answers are made solely for the purpose of IPR2022-01006, IPR2022-01045, IPR2022-01089, IPR2022-01093, and IPR2022-01094.").

In the interrogatories, Petitioner states:

MFi program, and who does *not* need to join); Ex. 3005 (referring to undefined "MFi certification requirements"); Ex. 1022, 6 (stating that "at least one exemplary product from the August Smart Lock family of products; and at least one exemplary product from the Yale Assure Lock family of products" were "submitted to Apple for certification purposes").

1. "Petitioners do not have any insurance policy or policies that name Apple as an additional insured" (*id.* at 7);
2. "Petitioners have not had any communications with Apple, directly or through counsel, . . . other than communications that relate solely to Petitioners seeking Apple's permission to produce documents in response to CPC's discovery request" (*id.* at 8);
3. "Petitioners and other ASSA ABLOY entities have not had any communications with Apple, directly or through counsel, regarding the validity or invalidity of the '208 Patent . . ." (*id.* at 10); and
4. "There have been no communications between Petitioners and Apple, directly or through counsel, relating to indemnification or obligation to indemnify based on assertion of . . . U.S. Patent No. 9,269,208 (*id.* at 11–12).

Additionally, Petitioner states in its interrogatory responses:

• Apple had no role whatsoever in Petitioners' IPRs.

• Petitioners never informed Apple that the IPR petitions were being prepared, never communicated with Apple regarding the substance of the IPR petitions, and never told Apple when or why the IPR petitions would be filed.

• Petitioners provide all direction to their outside counsel regarding the IPRs and the district court litigation between Petitioners and Apple [sic].[28]

• Apple previously filed its own IPR petitions regarding the subject patents (IPR2022-00600, IPR2022-00601, and IPR2022-

[28] This appears to be a misstatement. We have not been informed of any litigation between "Petitioners and Apple." The only litigation cited by the parties involves Petitioner and Patent Owner, Patent Owner and Apple, or Patent Owner and HMD Global. *See* Section I.C ("Related Matters") of this Decision.

> 00602). Petitioners likewise had no involvement whatsoever in Apple's IPR petitions. Petitioners never knew that Apple's IPR petitions were being prepared or that they would be filed.
>
> • Petitioners did not file any of Petitioners' IPR petitions at Apple's behest. Apple never requested that Petitioners file any IPR petitions challenging any of the patents-at-issue.
>
> • Apple has never had any control or say whatsoever in Petitioners' IPR petitions.
>
> • Apple has not contributed financially or in any other manner to any of Petitioners' IPR petitions.

Ex. 1022, 8–9.

There is no persuasive evidence that refutes or contradicts these interrogatory responses. The record before us contains no evidence of communications between Petitioner and Apple regarding this proceeding or the preparation of the Petition filed in this proceeding.

Patent Owner relies on several specific clauses in the Developer Agreement to establish the asserted RPI relationship, including: representations and warranties of noninfringement (PO Resp. 55–57); indemnification clauses (*id.* at 57–59); product inspection and insurance clauses (*id.* at 59–61); and appointment of Apple as an agent for distribution of Petitioner's "software on the Apple App Store;" (*id.* at 61). Patent Owner also asserts that Apple is "a clear beneficiary of the Petition (*id.* at 61–62). Additionally, Patent Owner asserts that the fact that Petitioner filed a Declaratory Judgment complaint seeking a declaration of non-infringement of the '039 patent is significant. PO Resp. 63.

We discuss these issues below.

a) Developer Agreement (Ex. 2009)

The Apple Developer Agreement is an 88-page agreement between Apple and software developers who need to use Apple software "to develop one or more Applications . . . for Apple-branded products." Ex. 2009, 1. The Developer Agreement provides "a limited license" to use Apple software "to develop and test" the Developer's software applications for Apple products. *Id.* "In order to use the Apple" software and related services," the prospective developer "must first accept" the Developer Agreement. *Id.*

(1) Representations and warranties of noninfringement (PO Resp. 55–57);

Patent Owner cites Section 3.2(d) of the Developer Agreement for its "warranties of noninfringement." Resp. 55–57. Section 3.2(d) states "*[t]o the best of Your knowledge and belief* . . . the Developer's products don't infringe any Apple or third party intellectual property or other rights." Ex. 2009, 16 (emphasis added). We do *not* consider Section 3.2(d) to be a "warranty." It is not a guarantee that products will not infringe. It is a representation of the developer's current "knowledge and belief." It is far different from the obligations created by the App developer's agreement in *Bungie*.

In *Bungie*, Bungie represented and warranted to Activision that Bungie owns or controls all the rights in "the Licensor Product Intellectual Property." *Bungie, Inc. v. Worlds, Inc.*, IPR2015-01264, Paper 64, 29 (PTAB Jan. 14, 2020) (termination following remand from the Federal Circuit (*see Worlds v. Bungie*, 903 F.3d 1237)). In *Bungie*, there also was a representation that "the use, development, distribution and publishing [of the

Licensor Product] as contemplated by and set forth in [the *Bungie*] Agreement, *shall not infringe upon or violate the rights of, nor require the consent of, any other party*." *Id.* (emphasis added). The representation in Section 3.2(d) of the Developer Agreement (Ex. 2009) in the case before us is *not* a similar warranty of noninfringement.

Patent Owner also cites Schedule 1, Section 4.1, of the Developer Agreement as evidence of a representation and warranty of noninfringement. Resp. 56.

The Developer Agreement refers to three "Schedules": Schedule 1, Schedule 2, and Schedule 3. *See* Ex. 2009, 1 ("Purpose," referring to the different purposes of Schedules 1 and 2); *id.* § 7.1 ("Delivery of Free Licensed Applications"); § 7.2 (delivery of "Fee-Based Licensed"); (*see also id.* at 73–88 (Schedule 1)).

Schedules 2 and 3 of the Developer Agreement were not included with Patent Owner's filed Exhibit 2009.

The Developer Agreement defines when Schedule 1 will apply:

> Distribution of free (no charge) Applications (including those that use the In-App Purchase API for the delivery of free content) via the App Store or Custom App Distribution will be subject to the distribution terms contained in Schedule 1 to this Agreement.

Ex. 2009, 1 ("Purpose" section).

The Developer Agreement also defines when Schedule 2 will apply:

> If You would like to distribute Applications for which You will charge a fee or would like to use the In-App Purchase API for the delivery of fee-based content, You must enter into a separate agreement with Apple ("Schedule 2").

Id.

Schedule 3 applies to "Custom App Distribution." *Id.*

We have not been directed to any evidence establishing the financial terms of how Petitioner's applications will be distributed. Thus, we do not know whether Petitioner's applications will be distributed for free, and thus subject to Schedule 1; whether Petitioner's applications will be distributed for a fee, and thus subject to Schedule 2; or whether Petitioner's applications will be distributed by "Custom App Distribution," and thus subject to Schedule 3.

Without evidence of the which of the three schedules apply to Petitioner, Patent Owner's arguments about the scope of the warranty in Schedule 1 are not probative evidence that Apple is an RPI in this proceeding.

Moreover, a contractual obligation of a representation and warranty, without more, does not establish that Apple is an RPI in this proceeding.

In *Bungie*, one responsibility of Bungie under the terms of the agreement in that case was to conduct "legal reviews." *Bungie*, IPR2015-01264, Paper 64 at 29. These "legal reviews were *in addition to* the representations and warranty of noninfringement. In *Bungie*, the agreement identified as an item to "be managed by and be the responsibility of Licensor [Bungie]": "[c]onducting legal reviews of the Products to ensure that all Intellectual Property and other rights are fully cleared for use." *Id.* The responsibilities of Bungie listed in the agreement, including these "legal reviews," were "subject to prior review and approval of [Licensee] Activision, (budget to [be] mutually approved) such approval not to be unreasonably withheld." *Id.* (citations to evidentiary record omitted). The stated purpose or required result of the "legal reviews" was "to ensure that

all Intellectual Property and other rights are fully cleared for use." *Id.* at 29–30.

In *Bungie*, the Board determined that "unlike an opinion letter that opines merely as to *whether* rights are clear for use, the Agreement requires the 'legal reviews' to be conducted so as 'to ensure' the rights are 'fully cleared for use.'" *Id* at 30. The Board concluded:

> [t]he reference to Activision being involved in mutually approving the budget further suggests that Activision would be funding, at least in part, the legal reviews. Thus, non-party Activision had a contractual interest in Petitioner Bungie's commitment to take actions "to ensure that all Intellectual Property and other rights are fully cleared for use."

Id.

In the case before us, we have not been directed to evidence of Petitioner being obligated to conduct for Apple "legal reviews" of allegedly infringed patents. Also, we have not been directed to evidence of Apple being involved in funding and/or managing such "legal reviews" of allegedly infringed patents.

(2) Indemnification clauses (PO Resp. 57–59)

Patent Owner asserts that the Developer Agreement "provides broad indemnification rights to Apple." PO Resp. 57 (citing Ex. 2009, 43).

The Developer Agreement provides the following indemnification clause:

> To the extent permitted by applicable law, You agree to indemnify and hold harmless, and upon Apple's request, defend, Apple, its directors, officers, employees, independent contractors and agents (each an "Apple Indemnified Party") from any and all claims, losses, liabilities, damages, taxes, expenses and costs, including without limitation, attorneys' fees and court costs (collectively, "Losses"), incurred by an Apple Indemnified Party

> and arising from or related to any of the following: . . . (ii) any claims that Your Covered Product or the distribution, sale, offer for sale, use or importation of Your Covered Product (whether alone or as an essential part of a combination), Licensed Application Information, metadata, or Pass Information violate or infringe any third party intellectual property or proprietary rights; . . .
>
> In no event may You enter into any settlement or like agreement with a third party that affects Apple's rights or binds Apple in any way, without the prior written consent of Apple.

Ex. 2009 § 10.

While it is clear that there is an indemnification clause, we note that Petitioner states "[t]here have been no communications between Petitioners and Apple, directly or through counsel, relating to indemnification or obligation to indemnify based on assertion of . . . U.S. Patent No. 9,269,208" (Ex. 1022 at 11–12). As discussed above, Apple has been sued for infringement by Patent Owner based on products provided by Petitioner. Thus, based on the record before us, it appears that Apple and Petitioner may have a different understanding than Patent Owner of the applicability of the indemnification clause.

According to Patent Owner, the "Board has previously found such indemnification arrangements to be significant evidence of RPI status." PO Resp. 57–58 (citing *Ventex Co., Ltd., v. Columbia Sportswear North America, Inc.*, IPR2017-00651, Paper 148 at 7, 10, 12 (PTAB Jan. 24, 2019) (precedential)).

As explained below, the indemnification agreement *Ventex* was not the determining factor in finding the existence of an RPI relationship. Moreover, the Board has held repeatedly that an indemnification relationship. *See Bae Sys. Info. & Elec. Sys. Integration, Inc. v. Cheetah*

Omni, LLC, IPR2013-00175, Paper 20, 4 (PTAB July 23, 2013) (holding indemnity provisions do not establish a right of control of a proceeding, and noting "indemnification is not one of the 'substantive legal relationships' cited in *Taylor*, 553 U.S. at 894**,** as binding a person not a party to a lawsuit to a judgment in that suit"); *Dep't of Justice v. Discovery Patents, LLC.*, IPR2016-01041, Paper 29, 8 (PTAB Nov. 9, 2017) ("[W]e are unaware of any *inter partes* review decision in which a real party in interest finding was based solely on evidence of an indemnification clause.").

In *Ventex*, the parties had a preexisting substantive legal relationship in the form of two contracts: (1) a Supplier Agreement with an obligation to indemnify and defend; and (2) an Exclusive Manufacturing Agreement. *Ventex*, IPR2017-00651, Paper 148, 12. The Board determined that it was "clear" that the parties "had a specially structured, preexisting, and well established business relationship with one another, including indemnification *and exclusivity arrangements*." *Id.* at 10 (emphasis added). In *Ventex*, the Board stated "[t]he exclusive business relationship between [the parties] . . . , and Ventex's express desire to shield its customers and potential buyers from infringement lawsuits by Columbia *strongly suggest* that Ventex filed the Petition, at least in part, on Seirus's behalf." *Id.* at 9.

There is no persuasive evidence to which we have been directed that establishes or suggests an *exclusive* manufacturing or *exclusive* licensing agreement between Petitioner and Apple.

In *Ventex*, the Board also determined that "Seirus was, in effect, funding the *inter partes* reviews, whether wittingly or unwittingly" based on the "timing, structure, and amounts" of payments made by Seirus to the petitioner. These payments "suggest[ed] a correlation with legal fees

incurred by Ventex in connection with the preparation and prosecution of these IPRs by its counsel." *Id.* at 13. An internal email linked these payments as "necessary to cover the attorney's fees in these *inter partes* reviews." *Id.*

We have not been directed to any persuasive evidence or argument that Apple is funding this IPR proceeding.

The Board specifically determined that it was the "totality of the circumstances" that "calls into considerable question Ventex's premise that Seirus is an entity divorced from this proceeding." *Id.* Our totality of facts and circumstances here are significantly different.

We have not been directed to any probative evidence that causes us to doubt Petitioner's statement in the interrogatory responses that "[t]here have been no communications between Petitioners and Apple, directly or through counsel, relating to indemnification or obligation to indemnify based on assertion of . . . U.S. Patent No. 9,269,208." Ex. 1022, 11–12. Also, there is no exclusive agreement between the parties and no evidence that Apple is funding this proceeding. Indeed, the evidence is to the contrary. *See id.* at 8–9 (Response to Interrogatory No. 3, stating "Petitioners have not had any communications with Apple, directly or through counsel, regarding any of IPR2022-01006, IPR2022-01045, IPR2022-01089"; "Apple had no role whatsoever in Petitioners' IPRs"; "Petitioners provide all direction to their outside counsel regarding the IPRs and the district court litigation between Petitioners and Apple"; "Petitioners did not file any of Petitioners' IPR petitions at Apple's behest"; and "Apple has never had any control or say whatsoever in Petitioners' IPR petitions.").

Accordingly, we give minimal probative weight to the existence in the Developer Agreement of an indemnity clause towards determining the existence of an RPI relationship between Apple and Petitioner.

(3) Product inspection and insurance coverage clauses (PO Resp. 59–61)

Patent Owner asserts that "Petitioners' products-at-issue include physical components that connect to their respective apps that are installed upon and run on Apple devices." PO Resp. 59 (citing Ex. 2026). Patent Owner then asserts that "Apple enjoys the right, *and indeed has exercised the right*, to physically inspect the Petitioners' products-at issue." *Id.* (citing "*Id.* at 36 [sic]").

Patent Owner also asserts that "Petitioners have admitted that numerous ASSA ABLOY products identified in the Parallel Litigation were sent to Apple for 'compliance' and/or 'certification' purposes." *Id.* (citing "Ex. 2032 (Response to Interrogatory No. 1)."[29]

According to Patent Owner, "the right to inspect shows the special closeness of Petitioners' relationship to Apple." *Id.* at 60.

Patent Owner also asserts "Section 6.1 [of the Development Agreement] also imposes certain insurance obligations upon Petitioners." *Id.*

Patent Owner concludes that the product inspection and insurance coverage clauses in the Development Agreement (Ex. 2009) are evidence of a "'specially structured, preexisting, and well-established business

[29] Exhibit 2032 is an incorrect citation. The correct citation to the only interrogatory responses in this proceeding is Exhibit 1022.

relationship with one another' with respect to the technology at issue." *Id.* at 59–60 (citing "*Ventex*," "at 10").

There can be no reasonable dispute that the 88-page Development Agreement (Ex. 2009) is clear evidence of a specially structured business relationship between Petitioner and Apple. Indeed, every contract between a buyer and a seller, or between a supplier and a manufacturer, provides a specially structured business relationship between the contracting parties. Every contractual business relationship, however, does not create a RPI legal relationship.

We have discussed in the preceding subsection the *Ventex* case on which Patent Owner relies. As we stated, the Board specifically determined that it was the "totality of the circumstances" in that case, not merely a business relationship, that established the RPI relationship in that case. *Ventex*, IPR2017-00651, Paper 148 at 13. In *Ventex*, one party was funding the IPR filed by another party. *Id.* As stated above, our facts and circumstances here are significantly different.

Moreover, the evidence before us establishes that Petitioner does not have any insurance policy that names Apple as an insured party. *See* Ex. 1022, 7 (response to Interrogatory No. 2).

Accordingly, we give these inspection, certification, and insurance clauses minimal probative weight in establishing an RPI relationship between Apple and Petitioner.

(4) Appointment of Apple as an agent for distribution of Petitioner's software on the Apple App Store (PO Resp. 61).

Patent Owner also asserts that Apple's appointment as Petitioner's agent is probative of Apple's RPI status to this IPR proceeding. PO Resp.

61 (citing "Exhibit A to Schedule 1"). The cited language from Schedule 1 is:

> You appoint Apple Inc. as Your agent pursuant to California Civil Code §§ 2295 et seq. for the marketing and end-user download of the Licensed Applications by end-users located in the following regions: United States

Id. The cited California code merely defines agency and states the authority, obligations, and other aspects of a principal and agent relationship. Moreover, this clause is specifically limited to Apple's role in "marketing and end-user download of the Licensed Applications," which concerns Apple's role in selling Petitioner's products.

As noted above, we have not been directed to evidence that Schedule 1 applies to Petitioner's relationship to Apple. Assuming it does, we do not see how a standard and limited agency appointment in this context establishes or suggests that Apple is an RPI to this IPR proceeding.

b) Whether Apple Is A Clear Beneficiary of the Petition

Patent Owner asserts "Apple is a 'clear beneficiary' of the Petition and 'has an interest in and will benefit from [Petitioners'] actions.'" PO Resp. 61–62 (citing *AIT*, 897 F.3d at 1351, 1353). Patent Owner selectively gleans one phrase from *AIT* and asserts it is the controlling factor in the proceeding before us. We disagree.

First, we look at the totality of the evidence and applicable factors, not just the "benefit" factor.

Second, as we have stated II.B.1 of this Decision, on September 27, 2023, the Board issued its Final Written Decision in the prior '601 Apple IPR challenging claims in the '208 patent, determining that all challenged claims, claims 1, 3–7, 9–11, and 13, were unpatentable. '601 Apple IPR,

Paper 31 (Sep. 27, 2023). Thus, Apple has already received all the benefits it requested from an *inter partes* review.

Third, Patent Owner fails to acknowledge the unique business arrangement involved in the *AIT* case, which is completely different from the standard commercial software licensing and product development arrangement between Apple and Petitioner in this proceeding.

In *AIT*, the petitioner, RPX Corporation ("RPX") was:

> a public company whose stated "mission is to transform the patent market by establishing RPX as the essential intermediary between patent owners and operating companies." One of its strategies is "to help members of [its] client network quickly and cost-effectively extricate themselves from [non-practicing entity ('NPE')] lawsuits."

AIT, 897 F.3d at 1339 (internal record citations omitted). As further explained by the Federal Circuit:

> [g]iven that one of RPX's publicly stated business solutions is to file IPRs where its clients have been sued by non-practicing entities to "reduce expenses for [its] clients," and that any IPR petitions Salesforce might have wanted to file would have been time-barred, this evidence at least suggests that RPX may have filed the three IPR petitions, in part, to benefit Salesforce [an RPX member].

Id. at 1353 (internal record citations omitted). As stated above, Apple was not time-barred, Apple timely filed its own petition, and Apple received the relief it requested, which was invalidating all challenged claims.

The numerous other factors identified and discussed above, further establish significant and substantive differences between the business relationships in *AIT* and in the proceeding before us.

3. The '039 Patent Issue

Patent Owner asserts Petitioners filed IPR petitions against all three patents that Patent Owner asserted in the Apple Action, including Patent No. 8.620,039 ("the '039 patent), even though Patent Owner "never mentioned the '039 Patent to Petitioners prior to Petitioners' IPRs." PO Resp. 63 (citing Exs. 2005, 2006, 2008). The IPR petitions filed by Petitioner challenging the '039 patent are IPR2022-01093 and IPR2022-01094. These two petitions challenge different claims from the '039 patent.

Patent Owner then points out that "the Federal Circuit identified 'the fact that the five patents asserted in the Activision litigation *were the same five patents* Bungie challenged in its IPR petitions' as one of three significant factors indicating that Activision was an RPI." PO Resp. 63 (citing *Worlds v. Bungie*, 903 F.3d at 1244).

Petitioner states clearly in its Declaratory Judgment complaint why it is challenging the '039 patent in that complaint, which also explains its interest in challenging the '039 patent in an IPR proceeding.

Petitioner states:

> The First [Patent Owner] Letter also purported to attach a list of patent assets owned by Charter Pacific that are "available for licensing" ("Charter Pacific Portfolio"), but that attachment was missing in the package that Yale received. On information and belief, the '039 Patent is one of the assets that Charter Pacific points out as being "available for licensing."

Ex. 2007 ¶ 60. Petitioner further states:

> Based on Charter Pacific's broad infringement allegations against Apple, it is likely that Charter Pacific would consider HID's and Hospitality's products and software solutions to be covered by the '039 patent.

Id. ¶ 105. Additionally, Petitioner states:

> Charter Pacific has already selected each of the Patents-In-Suit from a larger family of patents in the Charter Pacific portfolio and alleged infringement on grounds that are substantially similar to the allegations that are likely to be raised in any lawsuit brought against the ASSA ABLOY Entities.

Ex. 2007 ¶ 108.

Thus, Petitioner has identified valid reasons why it believed it would be sued for infringement of the '039 patent, justifying its challenge of the '039 patent in an IPR proceeding.

4. Conclusion on RPI

Considering the totality of the evidence and the controlling legal authority discussed above, we determine that Petitioner has met its burden in establishing that Apple is not a real party-in-interest.

We recognize that "a nonparty to an IPR can be a real party in interest even without entering into an express or implied agreement with the petitioner to file an IPR petition." *AIT*, 897 F.3d at 1354. In *RPX*, decided on remand from the Federal Circuit in *AIT*, "the evidence strongly suggest[ed]" that RPX was representing Salesforce's interests in filing the IPR proceedings at issue in that case. *RPX*, IPR2015-01750, Paper 128 at 31. There is no such strong evidence in the proceeding before us. Indeed, the evidence is to the contrary. *See, e.g.*, Ex. 1022 (Petitioner's Interrogatory Responses).

"Most critically," in *RPX*, "Salesforce paid RPX to reduce Salesforce's patent litigation exposure, and RPX filed the [] IPRs despite having no apparent risk of infringement liability itself." *RPX*, IPR2015-01750, Paper 128 at 31. Again, the evidence in *RPX* is significantly different from the evidence in the proceeding before us, where Petitioner

was sufficiently threatened with infringement by Patent Owner to create jurisdiction for Petitioner's Declaratory Judgment complaint against Patent Owner to establish that Petitioner did not infringe the '208 patent. *See, e.g.*, Ex. 2007 ¶¶ 120–128 (Petitioner's Declaratory Judgment complaint seeking in Count II "a declaration that each entity [comprising Petitioner] does not infringe any claim of the '208 Patent."). The Declaratory Judgment complaint was filed on May 23, 2022 (*see* Ex. 2007 stating "Filed 05/23/22"). The Petition in this IPR proceeding was filed on June 3, 2022 (*see* Paper 5). The perceived benefits of challenging patentability in an *inter partes* review rather than challenging validity in a district court are well-known. *Apple Inc. v. Vidal*, 63 F.4th 1, 17 (Fed. Cir. 2023) (acknowledging "the realistically perceived advantages of the IPR process, including the applicability of a lighter burden of persuasion to prevail in challenging a patent claim than the burden applicable in district court."). In such circumstances, "equitable and practical considerations" point clearly towards Petitioner having a valid, independent interest in filing the Petition in this proceeding. *AIT*, 897 F.3d at 1351.

In *AIT*, the Federal Circuit also points us to our own Trial Practice Guide, which instructs us to consider "whether a petition has been filed at a nonparty's 'behest.'" *AIT*, 897 F.3d at 1351 (quoting Trial Practice Guide, 77 Fed. Reg. at 48,759); *accord* CTPG 14. We acknowledge that even if Apple did not directly fund, control, or expressly request Petitioner to file this IPR proceeding, it could still be an RPI, as held in *RPX.* Unlike *RPX*, however, the evidence as discussed above does not support such an outcome.

Moreover, Apple initiated an IPR proceeding challenging claims of the '208 patent, which has resulted in all claims of the '208 patent

challenged by Apple to be unpatentable. *See* '601 Apple IPR, Paper 31. Thus, Apple will not benefit from any similar substantive determination in this proceeding. We have not been directed to any persuasive evidence that Apple needs, wants, funds, controls, or benefits from a second, later-filed petition, such as the one before us.

We recognize that Apple may derive some benefit if additional claims of the '208 patent are determined to be unpatentable in this post-grant proceeding. This derived benefit does not, however, make Apple an RPI to this proceeding. *See WesternGeco LLC v. ION Geophysical Corp.*, 889 F.3d 1308, 1321 (Fed. Cir. 2018) (stating in the context of the broader concept of privity that "[a]s a general proposition, we agree with the Board that a common desire among multiple parties to see a patent invalidated, without more, does not establish privity").

Here, we determine for purposes of this decision that, similar to the determination in *Uniloc 217*,

> [w]ithout such evidence of control, in addition to no evidence of joint funding, or even any evidence of substantial [direct or implied] coordination between the parties as to their respective decisions to bring these proceedings, a finding that [a non-party to this IPR proceeding] is an RPI of or in privity with [Petitioner] here would be improper.

Uniloc 2017, 989 F.3d at 1029.

Thus, based on the evidence before us and the analysis above, we determine that Apple is not an RPI in this IPR proceeding.

C. Privy Status

Patent Owner asserts that "Apple is a privy to this proceeding based at least on its pre-existing substantive legal relationship with Petitioners." PO Resp. 63. According to Patent Owner, "[t]he facts discussed concerning

Petitioners' [RPI] relationship with Apple equally demonstrate a privy relationship between Petitioners and Apple." *Id.* at 64.

The issue of privity in the context of an IPR proceeding was discussed in *RPX*, IPR2015-01750, Paper 128 at 36–38. As stated in *RPX*, Section 315(b) explicitly imposes time bars on privies to "prevent successive challenges to a patent by those who previously have had the opportunity to make such challenges in prior litigation." *RPX*, IPR2021-01750, Paper 125 at 36 (citing *WesternGeco*, 889 F.3d at 1319); *see also AIT*, 897 F.3d 1358–1365 (Reyna, J., concurring).

The Leahy-Smith America Invents Act does not define "privity." *WesternGeco*, 889 F.3d at 1317. Rather, "privity" has a common-law meaning. *Id.* "Privity is essentially a shorthand statement that collateral estoppel is to be applied in a given case." *Id.* at 1318 (quoting Office Patent Trial Practice Guide, 77 Fed. Reg. at 48,759[30]). The privity "analysis seeks to determine whether the relationship between the purported 'privy' and the relevant other party is sufficiently close such that both should be bound by the trial outcome and related estoppels." CTPG 14–15.

The Supreme Court stated in *Taylor* that "the rule against nonparty preclusion is subject to exceptions," which can be grouped into six categories." *Taylor*, 553 U.S. at 893. These six categories are: (1) where there is an agreement between the parties to be bound; (2) where there is a pre-existing substantive legal relationship between the parties; (3) where there is adequate representation by the named party; (4) where the non-party had control of the prior litigation; (5) where the non-party acts as a proxy for

[30] *See also* CTPG, 15 (including the same quotation).

the named party to relitigate the same issues; and (6) where special statutory schemes foreclose successive litigation by the non-party (e.g., bankruptcy and probate). *See Taylor*, 553 U.S. at 894–95 (describing "six categories that create independent exceptions" to the normal rule forbidding non-party preclusion). "Analysis under any one of the [*Taylor*] factors can support a finding of privity." *See Ventex*, IPR2017-00651, Paper 148 at 12 (describing "six categories that create independent exceptions" to the normal rule forbidding non-party preclusion).

The CTPG explains that "privity" is even more expansive than RPI, "encompassing parties that do not necessarily need to be identified in the petition as a 'real party-in-interest.'" CTPG 14. The Board "evaluate[s] what parties constitute 'privies' in a manner consistent with the flexible and equitable considerations established under federal caselaw." *Id.* "This approach is consistent with the legislative history of the AIA, which indicates that Congress included 'privies' within the parties subject to the statutory estoppel provisions in an effort to capture 'the doctrine's practical and equitable nature,' in a manner akin to collateral estoppel." *Id.* at 15 (quoting 154 Cong. Rec. S9987 (daily ed. Sept. 27, 2008) (statement of Sen. Kyl)).[31] As stated in *WesternGeco*, when considering privity, "the [PTAB's] Trial Practice Guide observes: 'The emphasis is not on a concept of identity of parties, but on the practical situation.'" 889 F.3d at 1318. "[T]he

[31] As explained by the Federal Circuit, "the related concept of privity 'is an equitable rule that takes into account the "*practical situation*," and should extend to parties to transactions and other activities relating to the property in question.'" *AIT*, 897 F.3d at 1349 (emphasis altered) (quoting Trial Practice Guide, 77 Fed. Reg. at 48,759 (citing 157 Cong. Rec. S1376 (Mar. 8, 2011) (statement of Sen. Kyl))).

standards for the privity inquiry must be grounded in due process."

Id. at 1319.

As the Federal Circuit further explains,

> This inquiry is grounded in due process concerns for both the petitioner . . . and the opposing party . . . In other words, the inquiry has a dual-focus on preventing the petitioner from now lodging a successive attack for which it already had a first bite, thus, protecting the defending party from an unwarranted second attack, while also ensuring that the petitioner is not unfairly limited in its ability to lodge its challenges if it has not had a full and fair opportunity to do so already.

Uniloc 2017, 989 F.3d at 1028 (citations omitted).

Petitioner asserts that "none of the Supreme Court's *Taylor* exceptions apply to the general common-law rule against nonparty preclusion. Reply 26–28. Petitioner discusses each *Taylor* factor and concludes that none of the factors, individually or collectively, establish that Apple is a privy of Petitioner. *Id.*

Here, the practical situation presented was created by Patent Owner. Patent Owner first sued Apple for allegedly infringing the '208 patent. *See* Section 1.C of this Decision (Related Matters). Apple answered the allegations in the complaint and timely filed the '601 Apple IPR Petition. Patent Owner separately wrote to Yale (Ex. 2005) asserting that Yale infringed the '208 patent. Yale is a company affiliated with Petitioner. Petitioner then filed the present IPR proceeding. Petitioner filed the present IPR proceeding challenging patentability of the '208 patent and separately filed a Declaratory Judgment action challenging the allegation of infringement (Ex. 2007), along with its related companies.

Patent Owner asserts that the "second *Taylor* factor," a pre-existing substantive legal relationship between Apple and Petitioner "clearly applies here for all the reasons discussed [] in Section VI.B.2" of its Patent Owner Response. PO Resp. 64. We disagree.

First, we note that Patent Owner does not assert or discuss any of the other five *Taylor* factors. Implicit in Patent Owner's argument is that we ignore the other *Taylor* factors. As stated in *WesternGeco*, however, each factor "is but one of a variety of considerations." *WesternGeco*, 889 F.3d at 1320 (stated in the context of discussing the "control factor"). *WesternGeco* also stated that the control factor considered in that case "is not the exclusive analytical pathway for analyzing privity," thus indicating that the privity analysis should consider all the other analytical pathways discussed in *Taylor*.

Here, we look to all of the non-exclusive factors identified in *Taylor v. Sturgell*, 553 U.S. at 894–95 to determine whether Apple is a privy of Petitioner. After doing so, we reach the conclusion that there is no persuasive evidence that Apple is a privy of Petitioner because:

- There is no persuasive evidence that there is an agreement between the Petitioner and Apple to be bound by any prior litigation or post-grant reviews concerning the '208 patent;
- There is no persuasive evidence of a pre-existing substantive legal relationship between Apple and Petitioner relating to prior litigation or post-grant reviews concerning the '208 patent;
- There is no persuasive evidence that Petitioner had adequate representation in any of Apple's prior litigation or post-grant reviews concerning the '208 patent;

- There is no persuasive evidence that Petitioner had control of any prior litigation or post-grant reviews concerning the '208 patent;
- There is no persuasive evidence that Petitioner acts as a proxy for Apple to relitigate the same patentability issues concerning the '208 patent; and
- There is no persuasive evidence of a special statutory scheme that forecloses successive litigation by Petitioner.

In fact, the record is to the contrary. *See* Ex. 1022 (Interrogatory responses).

WesternGeco recognized that a pre-existing business alliance, as well as indemnity provisions contained in the purchase agreements for the product accused of infringing were "insufficient to make PGS and ION privies within the meaning of the statute." *WesternGeco*, 889 F.3d at 1321 ("[W]e agree with the Board that these factors are insufficient to make PGS and ION privies within the meaning of the statute.").

Here, as found in *WesternGeco*, the parties "had a contractual and fairly standard customer-manufacturer relationship regarding the accused product." *Id.* "This finding does not necessarily suggest that the relationship is sufficiently close that both should be bound by the trial outcome and related estoppels, nor does it suggest, without more, that the parties were litigating either the district court action or the IPRs as proxies for the other." *WesternGeco*, 889 F.3d at 1321. We determine that this same analysis applies to this IPR proceeding.

Thus, based on the evidence and our analysis above, we determine that Apple is not a privy to Petitioner.

D. Conclusion Concerning Section 315(b)

The totality of the evidence before us does not establish anything other than a traditional business relationship between Petitioner, who manufactures locks and similar security products that interface with smartphones, and Apple, who sells a smartphone. There is a sharing of confidential information between these parties. This common form of conducting business, without more, does *not* establish a relationship sufficient to make Apple a real party-in-interest or a privy of Petitioner in this *inter partes* review.

There is no persuasive evidence that Apple has any control or substantive involvement over the Petition or over Petitioner's role in this proceeding. There is no persuasive evidence of joint funding. There is no persuasive evidence of direct or implied coordination between Apple and Petitioner as to their respective decisions to bring these proceedings. There is no persuasive evidence that Apple was a "litigating agent" for Petitioner.[32] Under these circumstances, a finding that Apple is a privy of Petitioner

---

[32] As stated in *Taylor*,

> We have never defined the showing required to establish that a nonparty to a prior adjudication has become a litigating agent for a party to the earlier case. Because the issue has not been briefed in any detail, we do not discuss the matter elaboratively here. We note, however, that courts should be cautious about finding preclusion on this basis. *A mere whiff of "tactical maneuvering" will not suffice*; instead, principles of agency law are suggestive. They indicate that *preclusion is appropriate only if the putative agent's conduct of the suit is subject to the control of the party who is bound by the prior adjudication*.

Taylor, 553 U.S. at 906 (emphases added).

"would be improper." *See Uniloc 2017*, 989 F.3d at 1029; *see also Google LLC v. DDC Technology, LLC*, IPR2023-00708, Paper 29 at 21–37 (PTAB Oct. 25, 2023) (determining that the mere existence of some business relationship was not sufficient to establish an RPI or privy status between the parties).

Accordingly, based on the totality of the evidence of record and our analysis above, we conclude that Apple is *not* an RPI or privy with Petitioner, and thus Petitioner is *not* time-barred under Section 315(b).

III. ANALYSIS OF PETITIONER'S CHALLENGES

A. Legal Standards

Petitioner's asserted grounds of unpatentability are based on obviousness under 35 U.S.C. § 103, quoted below.

> A patent for a claimed invention may not be obtained, notwithstanding that the claimed invention is not identically disclosed as set forth in section 102, if the differences between the claimed invention and the prior art are such that the claimed invention as a whole would have been obvious before the effective filing date of the claimed invention to a person having ordinary skill in the art to which the claimed invention pertains. Patentability shall not be negated by the manner in which the invention was made.

35 U.S.C. § 103.

The question of obviousness is resolved on the basis of underlying factual determinations, including: (1) the scope and content of the prior art; (2) any differences between the claimed subject matter and the prior art; (3) the level of ordinary skill in the art; and (4) when available, evidence such as commercial success, long-felt but unsolved needs, and failure of others. *Graham v. John Deere Co.*, 383 U.S. 1, 17–18 (1966); *see KSR Int'l Co. v. Teleflex Inc.*, 550 U.S. 398, 407 (2007) ("While the sequence of these

questions might be reordered in any particular case, the factors continue to define the inquiry that controls."). The Court in *Graham* explained that these factual inquiries promote "uniformity and definiteness," for "[w]hat is obvious is not a question upon which there is likely to be uniformity of thought in every given factual context." *Graham*, 383 U.S. at 18.

The Supreme Court made clear that we apply "an expansive and flexible approach" to the question of obviousness. *KSR*, 550 U.S. at 415. Whether a patent claiming the combination of prior art elements would have been obvious is determined by whether the improvement is more than the predictable use of prior art elements according to their established functions. *Id.* at 417. To reach this conclusion, however, it is not enough to show merely that the prior art includes separate references covering each separate limitation in a challenged claim. *Unigene Labs., Inc. v. Apotex, Inc.*, 655 F.3d 1352, 1360 (Fed. Cir. 2011). Rather, obviousness additionally requires that a person of ordinary skill at the time of the invention "would have selected and combined those prior art elements in the normal course of research and development to yield the claimed invention." *Id.*

In determining whether there would have been a motivation to combine prior art references to arrive at the claimed invention, it is insufficient to simply conclude the combination would have been obvious without identifying any reason *why* a person of skill in the art would have made the combination. *Metalcraft of Mayville, Inc. v. Toro Co.*, 848 F.3d 1358, 1366 (Fed. Cir. 2017).

Moreover, in determining the differences between the prior art and the claims, the question under 35 U.S.C. § 103 is not whether the differences

themselves would have been obvious, but whether the claimed invention as a whole would have been obvious. *Litton Indus. Prods., Inc. v. Solid State Sys. Corp.*, 755 F. 2d 158, 164 (Fed. Cir. 1985) ("It is elementary that the claimed invention must be considered as a whole in deciding the question of obviousness."); *see also Stratoflex, Inc. v. Aeroquip Corp.*, 713 F.2d 1530, 1537 (Fed. Cir. 1983) ("[T]he question under 35 U.S.C. § 103 is not whether the differences themselves would have been obvious. Consideration of differences, like each of the findings set forth in *Graham*, is but an aid in reaching the ultimate determination of whether the claimed invention as a whole would have been obvious.").

"A reference must be considered for everything it *teaches* by way of technology and is not limited to the particular *invention* it is describing and attempting to protect." *EWP Corp. v. Reliance Universal Inc.*, 755 F.2d 898, 907 (Fed. Cir. 1985).

As a factfinder, we also must be aware "of the distortion caused by hindsight bias and must be cautious of arguments reliant upon *ex post* reasoning." *KSR*, 550 U.S. at 421. This does not deny us, however, "recourse to common sense" or to that which the prior art teaches. *Id.*

Against this general background, we consider the references, other evidence, and arguments on which the parties rely.

B. Level of Ordinary Skill in the Art

The *Graham* analysis includes a factual determination of the level of ordinary skill in the art. Without that information, a court, or this Board, cannot properly assess obviousness "because the critical question is whether a claimed invention would have been obvious at the time it was made to one with ordinary skill in the art." *Custom Accessories, Inc. v. Jeffrey-Allan*

Indus., Inc., 807 F.2d 955, 962 (Fed. Cir. 1986). Thus, the level of skill in the art is "a prism or lens" through which we view the prior art and the claimed invention. *Okajima v. Bourdeau*, 261 F.3d 1350, 1355 (Fed. Cir. 2001). "This reference point prevents . . . factfinders from using their own insight or, worse yet, hindsight, to gauge obviousness." *Id.*

Factors pertinent to a determination of the level of ordinary skill in the art include: (1) educational level of the inventor; (2) type of problems encountered in the art; (3) prior art solutions to those problems; (4) rapidity with which innovations are made; (5) sophistication of the technology; and (6) educational level of workers active in the field. *Envtl. Designs, Ltd. v. Union Oil Co.*, 713 F.2d 693, 696–697 (Fed. Cir. 1983) (citing *Orthopedic Equip. Co. v. All Orthopedic Appliances, Inc.*, 707 F.2d 1376, 1381–82 (Fed. Cir. 1983)). Not all such factors may be present in every case, and one or more of these or other factors may predominate in a particular case. *Id.* Moreover, these factors are not exhaustive but are merely a guide to determining the level of ordinary skill in the art. *Daiichi Sankyo Co. v. Apotex, Inc.*, 501 F.3d 1254, 1256 (Fed. Cir. 2007). In determining a level of ordinary skill, we also may look to the prior art, which may reflect an appropriate skill level. *Okajima*, 261 F.3d at 1355.

Additionally, the Supreme Court informs us that "[a] person of ordinary skill is also a person of ordinary creativity, not an automaton." *KSR*, 550 U.S. at 421.

Petitioner states "[a] person having ordinary skill in the art ('POSITA') at the time of the alleged invention would have had at least an undergraduate degree in electrical engineering, or equivalent education, and at least two years of work experience in the field of security and

access-control." Pet. 8 (citing Ex. 1005 ¶ 26). Mr. Lipoff's cited testimony merely repeats, verbatim, Petitioner's asserted level of ordinary skill, preceded by the phrase "In my opinion." Ex. 1005 ¶ 26. Mr. Lipoff does not provide any facts or data to support his conclusory opinion. Accordingly, we give it minimal probative weight. 37 C.F.R. § 42.65(a) ("Expert testimony that does not disclose the underlying facts or data on which the opinion is based is entitled to little or no weight."); *see also Xerox Corp. v. Bytemark, Inc.*, IPR2022-00624, Paper 9 at 15 (August 24, 2022) (precedential) (holding an expert's declaration testimony is entitled to little weight when it contains an exact restatement of the petition's arguments without any additional supporting evidence or reasoning).

Patent Owner states it "does not object to the defined level of skill in the art adopted in co-pending IPR2022-00601 (the '601 IPR) challenging the '208 Patent." PO Resp. 8 (citing "IPR2022-00601, Paper 11 at 11–12"). The cited claim construction is from our Decision granting *institution* of an *inter partes* review in the '601 IPR. The level of skill in the '601 IPR was revised slightly in our *Final Written Decision* in the '601 IPR. *See* '601 IPR, Paper 31, 15. The level of skill in the '601 IPR was based on the arguments and evidence in the '601 IPR, which differ from the arguments and evidence in the case before us.

Accordingly, based on the prior art and the sophistication of the technology at issue, we determine that a person of ordinary skill at the time of the alleged invention would have had an undergraduate degree in a relevant technology or discipline, such as computer engineering, computer science, electrical engineering, or a related field, with one or two years of relevant experience in the field of human-machine interfaces and device

access security, or an equivalent balance of education and work experience. This level of ordinary skill is consistent with Petitioner's proposed definition, the cited references (Bianco, Mathiassen-067, Houvener, and Richmond), and the disclosure of the '208 patent.

C. Claim Construction

As stated in 37 C.F.R. § 42.100(b),

> a claim of a patent . . . shall be construed using the same claim construction standard that would be used to construe the claim in a civil action under 35 U.S.C. 282(b), including construing the claim in accordance with the ordinary and customary meaning of such claim as understood by one of ordinary skill in the art and the prosecution history pertaining to the patent. Any prior claim construction determination concerning a term of the claim in a civil action, or a proceeding before the International Trade Commission, that is timely made
>
> of record in the *inter partes* review proceeding will be considered.

37 C.F.R. § 42.100(b). Under this standard, claim terms are generally given their plain and ordinary meaning as would have been understood by a person of ordinary skill in the art at the time of the invention and in the context of the claims, patent disclosure, and prosecution history. *See Phillips v. AWH Corp.*, 415 F.3d 1303, 1313 (Fed. Cir. 2005) (en banc).

1. Claim Construction Principles

"[T]here is no magic formula or catechism for conducting claim construction." *Intel Corp. v. Qualcomm Inc.*, 21 F.4th 801, 809 (Fed. Cir. 2021) (quoting *Phillips*, 415 F.3d at 1324). Fortunately, however, there is substantial judicial guidance.

Claim construction requires determining how a skilled artisan would understand a claim term "in the context of the entire patent, including the

specification." *Grace Instrument Indus., LLC v. Chandler Instruments Co., LLC*, 57 F.4th 1001, 1008 (Fed. Cir. 2023) (quoting *Phillips*, 415 F.3d at 1313). "[C]laims must be read in view of the specification, of which they are a part." *Id.* (quoting *Markman v. Westview Instruments, Inc.*, 52 F.3d 967, 978 (Fed. Cir. 1995) (en banc)). The Specification, or more precisely, the written description, is the "single best guide to the meaning of a disputed term." *Id.* (quoting *Vitronics Corp. v. Conceptronic, Inc.*, 90 F.3d 1576, 1582 (Fed. Cir. 1996). The Specification "is, thus, the primary basis for construing the claims." *Id.* Although claim terms are interpreted in the context of the entire patent, it is improper to import limitations from the Specification into the claims. *Phillips*, 415 F.3d at 1323. Thus, we are careful not to cross that "fine line" that exists between properly construing a claim in light of the specification and improperly importing into the claim a limitation from the specification." *Comark Commc'ns., Inc. v. Harris Corp.*, 156 F.3d 1182, 1186 (Fed. Cir. 1998) ("We recognize that there is sometimes a fine line between reading a claim in light of the specification, and reading a limitation into the claim from the specification.").

While certain terms may be at the center of the claim construction debate, the context of the surrounding words of the claim also must be considered in determining the ordinary and customary meaning of those terms. *ACTV, Inc. v. Walt Disney Co.*, 346 F.3d 1082, 1088 (Fed. Cir. 2003).

We also consider the patent's prosecution history. *Phillips*, 415 F.3d at 1317.

In construing the claims, we may also look to available "extrinsic evidence concerning re levant scientific principles, the meaning of technical

terms, and the state of the art." *Phillips*, 415 F.3d at 1314 (quoting *Innova/Pure Water, Inc. v. Safari Water Filtration Sys., Inc.*, 381 F.3d 1111, 1116 (Fed. Cir. 2004)).

2. Biometric Signal

Our Original Final Written Decision determined that the claim term "biometric signal" "means a physical or behavioral biometric attribute that provides secure access to a controlled item." Paper 42, 70.

The Director's Decision on remand requires that the Board:

> authorize Petitioner to file supplemental briefing addressing: (1) the Board's construction for the term 'biometric signal' in the Final Written Decision and the application of the asserted art to the Board's claim construction, and (2) perceived inconsistencies between the Final Written Decisions in these proceedings and those in IPR2022-00602 or IPR2022-00601, as applicable. The Board shall also authorize Patent Owner to file a supplemental response to Petitioner's supplemental brief. After considering such briefing, the Board shall issue a new Final Written Decision in each of the captioned proceedings that considers the parties' supplemental briefing when resolving the claim construction of 'biometric signal,' the applicability of the prior art, and arguments as to inconsistency with IPR2022-00602 or IPR2022-00601, as applicable.

Dir. Dec. 7. We authorized, and the parties filed, their supplemental claim construction briefs.

The Director's Decision noted specifically:

> the parties' proposed constructions for 'biometric signal' focus on user attributes or the biometric signal's connection to another claimed component. *See, e.g.*, PO Resp. 9–12; Pet. Reply 8. The Board's construction of 'biometric signal' in its Final Written Decisions, however, requires that the biometric signal 'provides secure access to a controlled item.' Final Dec. 68. Neither party's proposed construction includes a requirement of 'provid[ing] secure access to a controlled item.' *See, e.g.*, PO

> Resp. 9–12; Pet. Reply 8. Nor was this requirement articulated in the Board's preliminary construction in its institution decision, where it afforded the term its [undefined] 'plain and ordinary meaning.' *See* Paper 23, 41; Paper 27, 41.

Dir. Dec. 6.

a) Post-Remand Briefs

In its post-remand Supplemental Claim Construction Brief, Petitioner asserts:

> To capture the full scope of how "biometric signal" is used in the claims and specification, a "biometric signal" should be construed to mean "the input and output of a biometric sensor."

Pet. Supp. Br. 1 (citing Reply 7–11; Ex. 1029 ¶¶ 5–15). This is the same construction Petitioner asserted prior to the remand.

In its post-remand Supplemental Claim Construction Response, concerning the construction of the term "biometric signal," Patent Owner asserts the "Board's inclusion of 'provides secure access' was proper" (PO Supp. Resp. 1) and that the construction of "biometric signal" "should be limited to physical attributes of the user" (*id.* at 1, n.2).[33] This is consistent with the construction asserted prior to remand in that it limits a biometric signal to "physical attributes" of the user and thereby excludes behavioral attributes. *See, e.g.*, PO Resp. 15 ("the '208 Patent is expressly drawn to physical biometrics exclusively, and the reference to 'voice' amongst the list of examples of biometric signals is consistent with physical attributes.").

---

[33] Considering the unique status of this case, we allow Patent Owner's reference in footnote 2 of its Supplemental Response to its initial Response and Sur-reply in this proceeding and do not reject this argument as an improper incorporation by reference under 37 C.F.R. § 42.6(a)(3).

b) Petition and Response

The claim construction issues in this proceeding began with the Petition and Patent Owner Response, so we too begin there.

In the Petition, Petitioner proposes construction for the terms "signal for directing input," in dependent claim 2 ('045 Petition 9–10), "feedback signal adapted to direct provision of . . . the biometric signal," in dependent claim 12 ('089 Petition 8–9), and all the "means-plus-function limitations" in the challenged claims. Pet. 10 ("Judge Albright (WDTX) construed seven means-plus-function limitations from the Challenged Claims, which Petitioners propose here. Petitioners also propose constructions for the remaining means-plus-function limitations that Judge Albright did not construe due to his procedural limitations, which appear in their respective Argument sections below.").

Petitioner also notes that some terms construed in the related District Court litigation in Texas "need not be construed" in these proceedings. Pet. 10–11. Nonetheless, we have considered these timely filed District Court constructions, as required by our rules. 37 C.F.R. § 42.100(b) ("Any prior claim construction determination concerning a term of the claim in a civil action . . . that is timely made of record in the *inter partes* review proceeding will be considered.").

Patent Owner also refers to the claim constructions in the related Texas District Court litigation. *See* PO Resp. 8–9 (citing Exs. 1009, 1010, 2033).[34]

---

[34] Exhibits 1009 and 1010 are each a "Claim Construction Order" from District Court litigation involving the '208patent and other related patents. Exhibit 1009 is a 4-page document that provides twelve "claim constructions

Relevant to the Director's Decision remanding this case to the Board for further consideration of construction of the claim term "biometric signal," we note that the related District Court claim construction Orders between the parties to this IPR proceeding (Ex. 1009, Ex. 1010) did *not* construe the term "biometric signal."

The first proposed construction for the term "biometric signal" in the proceeding before us is in Patent Owner's Response. PO Resp. 9–10. Therein, Patent Owner refers to four claim terms proposed by a different entity, Apple, the Petitioner in a different IPR proceeding, the '601 Apple IPR, which also involved the '208 patent. *Id.* at 9–19. Patent Owner asserts in its Response in the case now before us that we should use the same construction of the term "biometric signal" as was proposed in the '601 Apple IPR. PO Resp. 9–19. Patent Owner states:

> To the extent there is any dispute regarding construction of "biometric signal" as it is used in the claims of the '208 Patent, Patent Owner submits that the construction *adopted by the Board in the ['601] Apple IPR is the correct construction* and it should be applied is this proceeding as well."

PO Resp. 9–10 (emphasis added); *see also id.* at 19 ("the construction of 'biometric signal' as being a 'physical attribute' adopted in the Apple

---

for U.S. Patent Nos. 9,269,208 (''208 Patent'); 8,620,039 (''039 Patent'); and 9,665,705 (''705 Patent') after considering the parties' briefs and oral argument held February 10, 2022." Exhibit 1010 is a 3-page document that provides an additional eight claim constructions "after considering the parties' briefs and oral argument held January 25, 2022." Ex. 2033 is a "Joint Claim Construction Statement" from District Court litigation between Patent Owner and Apple, Inc. involving the '208 patent.

litigation and in IPR2022-00601 should be adopted in this proceeding").[35]

Relevant to the Director's Decision remanding this case to the Board for further consideration of construction of the claim term "biometric signal," we note that the related District Court claim construction Orders between the parties to this IPR proceeding (Ex. 1009, Ex. 1010) did *not* construe the term "biometric signal."

Responding to Patent Owner's assertion on claim construction, Petitioner asserts that "when read in light of the specification, the 'biometric signal' is simply the input and output of the biometric sensor." Reply 8.

Patent Owner argues that the claim construction asserted by Petitioner in its Reply is "untimely." Sur-reply 1; *id.* at 5 ("The Board should not consider Petitioners' untimely construction."); *id.* ("It is well-established that a petitioner must present proposed claim constructions in the Petition, not belatedly in a Reply."). Based on the facts of this proceeding and controlling precedent from the Federal Circuit, we disagree with Patent Owner's characterization of Petitioner's proposed claim construction as "untimely."

---

[35] Patent Owner misconstrues what claim construction was "adopted" in the '601 Apple IPR. Patent Owner asserts we "adopted" a claim construction for "biometric signal" in our Decision to Institute ('601 Apple IPR, Paper 11). This Decision was not a final agency action under 5 U.S.C. § 704, nor was it binding precedent. Our final agency action was in our final written decision (*id.*, Paper 31), which did not adopt a specific construction for the term "biometric signal." We also note that the '601 Apple IPR involved a different petitioner, different evidence, and different arguments than what were asserted in the proceeding before us.

The issue of whether a petitioner can assert a new claim construction in its reply was addressed in *Axonics, Inc. v. Medtronic, Inc.*, 75 F.4th 1374 (Fed. Cir. 2023). The Federal Circuit held:

> [W]here a patent owner in an IPR first proposes a claim construction in a patent owner response, a petitioner must be given the opportunity in its reply *to argue and present evidence* of anticipation or obviousness under the new construction, at least where it relies on the same embodiments for each invalidity ground as were relied on in the petition.

Id. at 1384 (emphasis added). This is the situation in this proceeding. Thus, we must consider Petitioner's arguments and evidence submitted in its Reply. *See also Apple Inc. v. Omni MedSci, Inc.*, No. 2023-1034, 2024 WL 3084509, at *6 (Fed. Cir. June 21, 2024); *Parkervision, Inc. v. Vidal*, 88 F.4th 969, 979 (Fed. Cir. 2023) (each case following the holding in *Axonics* discussed above).

Following remand, Petitioner asserted:

> a "biometric signal" is not limited to one that "provides secure access." The claims expressly state a separate "secure access signal" is created and sent to a receiver sub-system, so that the receiver sub-system can provide secure access. And the claims and specification establish the biometric signal provides more than just secure access, playing an important administrative role in enrolling users. To capture the full scope of how "biometric signal" is used in the claims and specification, a "biometric signal" should be construed to mean "the input and output of a biometric sensor."

Pet. Supp. Br. 1 (internal citations omitted). Thus, according to Petitioner, properly construed, a "biometric signal" is "the input and output of a biometric sensor." *Id.* (citing Petitioner's Reply, 7–11; Ex. 1029 ¶¶ 5–15).

This post-remand argument is fully consistent with Petitioner's pre-remand argument. Reply 7–8 (asserting "when read in light of the

specification, the 'biometric signal' is simply the input and output of the biometric sensor").

Petitioner supplements this asserted construction, however, by adding the following caveat: "Petitioner[] do[es] not dispute a 'biometric signal' includes physical *and* behavioral attributes." Pet. Supp. Br. 5 n.1. Petitioner then states that this asserted caveat "is *not inconsistent* with the Apple FWD, *where the prior art did not involve behavioral attributes*." *Id.* (citing the '602 Apple IPR, Paper 11 at 23 (emphases added).[36]

Patent Owner's pre-remand proposed construction for the term "biometric signal" is "*physical* attribute of the user (i.e., fingerprint, facial pattern, iris, retina, voice, etc.)." PO Resp. 9–10, 19 (emphasis added). This is the proposed, unopposed construction asserted by Petitioner Apple in the '601 Apple IPR and referred to in the Decision to Institute that proceeding. *See* '601 Apple IPR, Paper 11, 13. Patent Owner relies on intrinsic and extrinsic evidence to support its proposed construction. As we discuss below in Section III.C.2.e., the issues argued by the parties in the '601 Apple IPR involved only physical attributes of biometric signals, such as fingerprints. Unlike the proceeding before us, the '601 Apple IPR did not discuss, argue, or present any evidence regarding the existence of behavioral attributes of a biometric signal.

Patent Owner asserts that "the specification makes clear that a 'biometric signal' as used in connection with the claimed invention is a *physical attribute* of the user." PO Resp. 10 (citing Ex. 1001, 1:29–32). The cited portion of the Specification states:

---

[36] This citation likely should have been to the '601 Apple IPR, which concerned the '208 patent.

> One example of a biometric signal is a fingerprint. Other physical attributes that can be used to provide biometric signals include voice, retinal or iris pattern, face pattern, palm configuration and so on.[37]

Ex. 1001, 1:29–33.

Patent Owner focuses on the reference to "[o]ther physical attributes" in this disclosure and asserts that this reference to "physical attributes" defines the claim term "biometric signal." PO Resp. 10 ("This definition as established by the patentee controls" [the meaning of the claim term "biometric signal"]) (emphasis omitted). Patent Owner also asserts that "[f]ingerprints, retinal patterns, iris patterns, face pattern, and palm configuration are all physical attributes." *Id.* at 11 (citing several extrinsic exhibits). Conspicuously absent from Patent Owner's list is the Specification's reference to "voice" and to "and so on." As we discuss below, "voice" is considered by the evidence in this proceeding to be a behavioral attribute, or, at best, an attribute that may be considered as both physical and behavioral.

In its post-remand response, Patent Owner asserts the functional phrase "that provides secure access to a controlled item" in our original claim construction was correct. PO Supp. Resp. 1 ("The Board's inclusion of 'provides secure access' was proper."). According to Patent Owner, "the express objective of the claimed invention is a 'system for providing secure

[37] As we discuss below, the word "voice," and the phrase "and so on" in the Specification create ambiguity concerning whether the meaning of "biometric signal" includes both physical attributes and behavioral attributes.

access to a controlled item.'" *Id.* at 1–2 (citing our original Final Written Decision (Paper 47) at 60 and "Claims 1, 11, 15, 16, 17."

Patent Owner maintains, however, "for the reasons stated in Patent Owner's Response and Sur-Reply, that the construction of 'biometric signal' should be limited to physical attributes of the user." PO Supp. Resp. 1, n.2. Thus, Patent Owner's proposed construction *excludes* behavioral attributes.

c) Summary of the Parties Proposed Claim Constructions for the Term "Biometric Signal"

We summarize below the various positions of the parties discussed above for the term "biometric signal."

Petitioner now asserts a "biometric signal" means 'the input and output of a biometric sensor" (Pet. Supp. Br. 1); that is *not* limited to a signal that "provides secure access" (*id.*); and "includes physical and behavioral attributes" (*id.* at 5, n.1).

Patent Owner now asserts a "biometric signal" means a "physical attribute of the user (i.e., fingerprint, facial pattern, iris, retina, voice, etc.)" ((PO Supp. Resp. 9; *see also id.* at 1, n.2); that "provides secure access" (*id.* 1).

To determine the correct construction of the term "biometric signal", we turn to the evidence. First, we turn to the intrinsic evidence. We start with the claims.

d) Claims

The term "biometric signal" appears extensively throughout the challenged claims. Claim 1 is illustrative.

(1) Provides Secure Access to a Controlled Item

The challenged claims state the specific objective of the claimed invention as a "system for providing secure access to a controlled item." *See, e.g.*, Ex. 1001, 15:42–43 (representative claim 1). Thus, the purpose of the biometric signal is to achieve this objective – "secure access to a controlled item."

Patent Owner asserts that the "Board's inclusion [in its construction of the term "biometric signal"] of 'provides secure access' was proper." PO Supp. Resp. 1; *see also id.* at 3 (concluding that "inclusion of 'provides secure access to a controlled item' as part of the construction of 'biometric signal' is reasonable").

Petitioner takes a different view. Petitioner asserts:

> a "biometric signal" is not limited to one that "provides secure access." The claims expressly state a separate "secure access signal" is created and sent to a receiver sub-system, so that the receiver sub-system can provide secure access. And the claims and specification establish the biometric signal provides more than just secure access, playing an important administrative role in enrolling users.

Pet. Supp. Br. 1 (citations omitted). Petitioner also asserts:

> There is no dispute that the claimed biometric signal is *one component* in a larger system that "provides secure access." The claims, however, explain (i) other claim elements provide the secure access, and (ii) although the biometric signal contributes to providing secure access, it *also* has an important role in enrolling users.

Id. at 2–3.

Here, we agree with Petitioner that the functional phrase "provides secure access to a controlled item," specifically discussed in the Director's Decision (Dir. Dec. 6), is unnecessary, and in fact, is redundant of language

already in the challenged claims. *See, e.g.*, Ex. 1001, 15:62–63 (claim 1 stating the invention claimed is a "system for providing secure access to a controlled item"). The same or similar phrase appears in all the challenged claims.

Accordingly, we revise this claim construction from our Original Final Decision to delete this functional phrase.

(2) Physical and Behavioral Attributes

Patent Owner admits that, at the time of the claimed invention, it was known that there were two basic categories of biometric measurements; namely, measurements of: (i) physical attributes, and (ii) behavioral attributes. PO Resp. 11–12 (citing Ex. 2031 ¶ 34). The cited Declaration testimony is from Dr. Russ, Patent Owner's expert witness who testifies that "[a]t the time of the invention of the '705 Patent, i.e., August 2003, a POSITA would have understood that there were two categories of biometric measurements, namely, measurements of (i) physical attributes and (ii) behavioral attributes." Ex. 2031 ¶ 34 (citing Ex. 1003, 7:57–65). For support, Dr. Russ quotes U.S. Patent No. 6,256,737 to Bianco, (Ex. 1003), explaining that "*behavioral* characteristics . . . may include, but [are] not limited to, *voice*, typing stroke and signature.") *Id.* (quoting Ex. 1003, 7:57–65) (emphases added).

Notwithstanding this clear admission by Patent Owner and Dr. Russ, the claim construction dispute in the proceeding before us is whether a "biometric signal," as disclosed and claimed, is limited to "physical" attributes (as Patent Owner contends) or also includes "behavioral" attributes (as Petitioner contends).

Consistent with the Director's Decision that we consider "inconsistency with IPR2022-00602 or IPR2022-00601, as applicable" (Dir. Dec. 7), we also note here that this issue—whether a biometric signal includes *both* physical attributes and behavioral attributes—was *not* before us in the related Apple '601 IPR, which also considered patentability of the '208 patent.

As we explain below, we determine that the construction of the term "biometric signal" is "a physical or behavioral biometric attribute." Claim 1 includes "a biometric sensor for receiving receive a biometric signal." Ex. 1007, 15:46. Claim 1 also includes "a transmitter sub-system having "means for matching the biometric signal against members of the database of biometric signatures." *Id.* at 15:47–48. The transmitter subsystem also includes "means for receiving a series of entries of the biometric signal, said series being characterised according to at least one of the number of said entries and a duration of each said entry." *Id.* at 15:61–64. This "series of entries of the biometric signal," for example, to enroll new users, is the Morse code-like entries of "dit, dit, dit, dah" described in the Specification. Ex. 1007, 10:50–63. The structure for this limitation is software or code. *Id.* at 4:33–37.

We also note that claim 4, dependent from claim 1, states "the biometric sensor [which receives the biometric signal] is responsive to one of voice, retinal pattern, iris pattern, face pattern, and palm configuration [biometric signals]." *Id.* at 16:25–27. Because claim 4 must further limit claim 1, the "biometric sensor" in claim 1, must have a broader scope of received biometric signals than the limited options stated in claim 4. Indeed,

none of the claims in the ’208 patent refer specifically to a fingerprint signal or a fingerprint sensor.

The challenged claims use the phrase “biometric signal.” There is no modifier limiting the biometric signal to including only physical attributes, or excluding behavioral attributes. Based on the claims, the term “biometric signal” is a signal that can be received and processed by a biometric sensor and by a transmitter subsystem, and also can be matched to a database.

Based on the claims, there is no basis for limiting a biometric signal to only physical attributes.

e) Specification

The Specification states that “[o]ne example of a biometric signal is a fingerprint.” Ex. 1001, 1:29–30. A fingerprint is “the pattern of curved lines on the end of a finger or thumb that is different in every person, or a mark left by this pattern”[38] Thus, whatever claim construction we give to the term “biometric signal,” it must be able to include a “fingerprint” as exemplary of the adopted construction. This example of a fingerprint is consistent with Petitioner’s assertion that “the ‘biometric signal’ is simply the input and output of the biometric sensor” because, as disclosed, the input to the biometric sensor is pressing a finger against the biometric sensor, and the output of the biometric sensor is an electronic representation of a fingerprint. *See, e.g.*, Ex. 1001, Fig. 10, and related text; *see also* Ex. 1005 ¶ 28 (Mr. Lipoff’s Declaration testimony explaining an annotated Figure 10 from the ’208 patent).

[38] From Cambridge Dictionary, Available at: https://dictionary.cambridge.org/us/dictionary/english/fingerprint

After stating a fingerprint as one "example" of a "biometric signal," the Specification then states "[o]ther physical attributes that can be used to provide biometric signals include voice, retinal or iris pattern, face pattern, palm configuration *and so on*." *Id.* at 1:30–32 (emphasis added). These other "physical attributes," like the fingerprint example, are additional examples of a "biometric signal." There is nothing in the quoted language from the Specification that suggests that this list of "attributes" is intended to be a closed list that excludes other attributes, or is intended to be a definition of the term "biometric signal." In fact, the phrase "and so on" included in this list suggests exactly the opposite. It acknowledges there are additional, unlisted attributes that also can be a "biometric signal."

We recognize that the "Background" section of the Specification states that "[o]ther *physical attributes* . . . can be used to provide biometric signals." *Id.* at 1:30–31 (emphasis added). This discussion of the background technology is the sole use of the phrase "physical attributes," or similar phrase, in the '208 patent, and is the only reference in the '208 patent to the "physical" class of biometric signals.

The Specification also states that whatever form the biometric signal takes, it must be matched with a coordinated biometric sensor. As explained in the Specification, "for example, if the biometric sensor 121 in the code entry module 103 is a fingerprint sensor, then the request 102 typically takes the form of a thumb press on a sensor panel (not shown) on the code entry module 103." *Id.* at 5:56–59. A fingerprint sensor would not work if the biometric signal is, for example, a "face pattern." For this reason, Petitioner's proposed construction, "the input and output of a biometric sensor" (Pet. Supp. Br. 1), is too broad because it allows for any type of

input. If the "input" to the biometric sensor is a series of numbers or letters, for example, that input would not be accepted by the sensor as a "biometric signal." Thus, not just any "input" will work; rather, it must be a "biometric input," and, to function as claimed, the biometric input must be matched with a coordinated biometric sensor.

The Specification does not provide any persuasive basis for limiting a biometric signal to physical attributes, thereby excluding biometric signals that are behavioral attributes. Indeed, as discussed more extensively in the subsection on Extrinsic Evidence (*infra* Section III.C.2.g), the extrinsic evidence includes voice, listed in the Specification, as a behavorial attribute, or at least an attribute that is *both* behavioral and physical.

f) Prosecution History

Neither party directs our attention to any persuasive evidence in the prosecution history of the '208 patent that informs our construction of the term "biometric signal."

g) Extrinsic Evidence Regarding Physical Attributes and Behavioral Attributes of a Biometric Signal

Patent Owner asserts that at the time of the invention of the '208 Patent, *i.e.*, August 2003, "a POSITA would have understood that there were two basic categories of biometric measurements, namely, measurements of (i) physical attributes and (ii) behavioral attributes." PO Resp. 11–12 (citing Ex. 2031 ¶ 34).

Patent Owner also cites the Bianco reference asserted in this proceeding for the disclosure that:

> Biometric identification mechanisms include ***two basic categories of biometric measurements. The first category***

> ***involves measuring a unique characteristic found on a user's body***. This may include, but is not limited to, finger and hand geometry, retina and facial images, weight, DNA data and breath. ***The second category involves measuring a user's behavioral characteristics***. This may include, but is not limited to, voice, typing stroke and signature.

PO Resp. 12 (citing Ex.1003, 7:57–65) (all emphasis is in the cited PO Response). This quote from Bianco clearly states that the generic concept of "biometric identification" or "biometric measurement" includes two distinct categories: (1) unique characteristics found on a user's body; and (2) "behavioral characteristics." Ex. 1003, 7:57–67. These two categories are the same two categories identified by Patent Owner. *See* PO Resp. 11–12 (identifying "two basic categories of biometric measurements, namely, measurements of (i) physical attributes and (ii) behavioral attributes"). Both categories represent a "biometric measurement" or, using the term from the '208 patent, a "biometric signal."

As defined in Bianco, the biometric signals in the first category – unique characteristics found on a user's body – include "finger and hand geometry, retina and facial images, *weight*, DNA data and breath." *Id.* at 7:61–62 (emphasis added). We take official notice that a person's "weight" is a highly variable measurement. We also take official notice that two different people may have the exact same "weight." Nonetheless, Bianco, as cited by Patent Owner, states that this is a physical attribute. The biometric signals of "weight," "DNA data," and "breath" are not included in the list of "[o]ther physical attributes that can be used to provide biometric signals" as disclosed in the '208 patent. *See* Ex. 1001, 1:29–33. Thus, the biometric signals of "weight," "DNA data," and "breath" must be included

in the phrase "and so on" used to expand the limited examples of a biometric signal disclosed in the '208 patent (Ex. 1007, 1:30–32).

As disclosed in Bianco, the generic category of a biometric signal also includes "voice, typing stroke and signature" in the "behavioral category" of a biometric signal. Ex. 1003, 7:62–65. (stating "[t]he second category [behavioral attributes] involves measuring a user's behavioral characteristics. This may include, but is not limited to, *voice*, typing stroke and signature" (emphasis added)). Bianco's disclosure is unambiguous—"voice" is a behavioral attribute.

Patent Owner also recognizes that Liu discloses that "voice" is a "behavioral" characteristic that also has a physical component. PO Resp. 12 (citing Ex. 2035, 1). Liu discloses:

> Biometrics measure individuals' unique physical or behavioral characteristics to recognize or authenticate their identity. Common physical biometrics include fingerprints; hand or palm geometry; and retina, iris, or facial characteristics.
>
> *Behavioral characters include* signature*, voice (which also has a physical component*), keystroke pattern, and gait. Of this class of biometrics, technologies for signature and voice are the most developed.

Ex. 2035, 1 (emphasis added). Thus, Liu classifies "voice" as a behavioral attribute, with a physical component. It is significant, however, that Patent Owner's summary chart only lists Liu under the heading of a "Behavioral biometric," as does Dr. Russ, Patent Owner's expert. *See* PO Resp. 13–14; Ex. 2031 ¶ 38.

Additionally, Patent Owner cites Currie (PO Resp. 13–14), which discloses that "[i]n the case of voice authentication, there is both a Physiological biometric component (for example, voice tone and pitch) and

a behavioral component (for example, accent). This makes it very useful for biometric authentication." Ex. 2036, 4. Patent Owner's summary chart lists Currie under both the heading of a "Physical biometric" and "Behavioral biometric." PO Resp. 13–14; *see also* Ex. 2031 ¶ 38. It is the only document listed in both categories.

Thus, based on the extrinsic evidence, Dr. Russ' testimony, and Patent Owner's summary chart, all three references on which Patent Owner relies for support of whether "voice" is a physical attribute or a behavioral attribute, include 'voice" in the behavioral category.

Notwithstanding the clear weight of the cited extrinsic evidence, Patent Owner concludes from Bianco, Liu, and Currie that "the '208 Patent is expressly drawn to *physical biometrics exclusively*, and the reference to 'voice' amongst the list of examples of biometric signals is consistent with physical attributes." PO Resp. 15 (emphasis added); PO Supp. Resp. 1, n.2. We disagree.

Patent Owner's argument that "voice" is a purely "physical attribute" is not supported by any persuasive evidence. To the contrary, Bianco, as recognized by Patent Owner's expert, Dr. Russ (*see* Ex. 2031 ¶¶ 34–40), for example, states "voice" is a behavioral attribute. Ex.1003, 7:57–65. Liu states voice is a behavioral attribute (which also has a physical component), and Currie states "voice" has *both* behavioral and physical attributes, and is included in both categories.

There is no persuasive evidence to which we have been directed that establishes that the generic term "biometric signal" used in the '208 patent includes only the first category of signals ("physical") and excludes the second category ("behavioral"). Thus, based on the disclosure in Bianco,

and Patent Owner's acknowledgement that Bianco is representative of what a person of ordinary skill would have known about the two basic categories of biometric measurements (PO Resp. 11–12), we determine that the generic term "biometric signal," as used in the '208 patent, includes both physical and behavioral attributes.

We recognize that a distinction between physical attributes and behavioral attributes exists. But, Bianco's analysis is consistent with the other extrinsic evidence cited by Patent Owner (PO Resp. 12–19) that there is no bright-line separating which biometric measurements fall into each category. Bianco includes "weight" and "breath" as physical measurements, and "voice" as a behavioral measurement. Ex. 1003, 7:57–65. Patent Owner admits that "voice" is a biometric signal "that appears in both categories" (*e.g.*, PO Resp. 14), but still maintains that the proper construction of the term "biometric signal" in the claims "should be limited to physical attributes of the user" (PO Supp. Resp. 1, n.2 (citing PO Resp; Sur-reply)).

h) The Experts

Mr. Lipoff, Petitioner's expert, testifies that, in his opinion, "there is no basis to limit the term "biometric signal" to exclude behavioral biometrics. So long as the biometric sensor can output a biometric signal capable of uniquely identifying a user, the claims and purported invention would be viable." Ex. 1029 ¶ 14.

Dr. Russ, Patent Owner's expert, also admits that "voice can be either a behavioral or a physical biometric measurement." Ex. 2031 ¶ 42 (citing Liu (Ex. 2035, 1) and Currie (Ex. 2036, 4)). Notwithstanding this clear admission, and the weight of the evidence. Russ testifies that it is his opinion

that "a POSITA would have understood the '208 Patent to be classifying voice solely as a physical attribute at least because of the express definition of 'biometric signal' as a physical attribute, and because it is included in a listing of other attributes that are all *exclusively* physical." *Id.* (emphasis added). The evidence does not support this conclusory opinion. Indeed, the disclosures in Bianco, Liu, and Currie, as discussed above, clearly refute Dr. Russ's opinion testimony that "voice" is exclusively a physical attribute. Accordingly, we give Dr. Russ's opinion testimony on this issue minimal probative weight.

i) The '601 Apple IPR

The Director's Decision remanding this proceeding to the Board stated that, in reconsidering our construction of the term "biometric signal," we should consider "arguments as to inconsistency with IPR2022-00602 or IPR2022-00601, as applicable." Dir. Dec. 7.

In the '601 Apple IPR, which also involved the '208 patent, our Decision to Institute adopted, without further analysis, the unopposed proposed constructions by Petitioner Apple. '601 Apple IPR, Paper 11 at 13 ("Based on the record before us, we adopt, for purposes of this Decision [to Institute], Petitioner's unopposed proposed claim constructions."). One of the proposed constructions was for the term "biometric signal." *See* '601 Apple IPR, Pet. 9. The proposed claim construction was "[p]hysical attribute of the user (i.e., fingerprint, facial pattern, iris, retina, voice, etc.)." *Id.*

We also stated in the Decision to Institute in the '601Apple IPR:

> This initial claim construction determination does not preclude the parties from arguing their proposed constructions of the claims during trial. Indeed, the parties are hereby given

> notice that final claim construction, in general, is an issue to be addressed at trial. Claim construction will be determined at the close of all the evidence and after any hearing. The parties are expected to assert all their claim construction arguments and evidence in the Petition, Patent Owner's Response, or otherwise during trial, as permitted by our rules.

'601 Apple IPR, Paper 11, 14.

Petitioner asserts that our original construction in the case now before us prior to remand "is inconsistent with" the claim construction in "the '602 Apple IPR." Pet. Supp. Br. 5.[39] We acknowledge that our original construction is different than what we stated in the Decision to Institute in the '601 Apple IPR. The difference, however, is based on the different arguments, different issues, and different evidence presented by the different parties in the '601 Apple IPR. Considering these significant and substantive differences, we determine the claim construction for the term "biometric signal" in the proceeding before us is *not* inconsistent with the claim construction for this same term in the '601 Apple IPR, or the '602 Apple IPR, if applicable.

The arguments, issues, and evidence in the '601 Apple IPR never identified or discussed the behavioral category of biometric signals. Neither Bianco, Liu, nor Currie were cited as evidence in the '601 Apple IPR.

In the '601 Apple IPR, Patent Owner therein, which is the same Patent Owner as in this proceeding on remand, never acknowledged the existence

---

[39] The cited '602 Apple IPR involved the '705 patent. More applicable to the proceeding before us is the '601 Apple IPR, which challenged the '208 patent. Both the '601 Apple IPR and the '602 Apple IPR included the same claim construction for the term "biometric signal." Because it addressed the '208 patent challenged in the proceeding before us, we will cite to the '601 Apple IPR.

of "behavioral" biometric attributes, as it now does. PO Resp. 11–12 (citing Ex.1003, 7:57–65); *see also id.* at 13–14 (Patent Owner's chart including "voice" disclosed in Bianco as a "Behavioral biometric"); *see generally* '601 Apple IPR.

In the '601 Apple IPR, Patent Owner never admitted that "voice" can be classified as solely a behavioral attribute, as it now does by citing Bianco. *See id.* (citing Ex.1003, 7:57–65); *see also id.* at 13–14 ((Patent Owner's chart including "voice" disclosed in Bianco as a "Behavioral biometric"); *see generally* '601 Apple IPR.

In the '601 Apple IPR, Patent Owner never admitted that "voice" is a behavioral attribute, "which also has a physical component.," as it now does in its discussion and summary of Liu. *Id.* at 12; *see also id.* at 13–14 (Patent Owner's chart including "voice" disclosed in Liu as a "Behavioral biometric"); *see generally* '601 Apple IPR.

In the '601 Apple IPR, Patent Owner never admitted that "voice" has both behavioral and physical attributes, and is included in both categories, as it now does in its discussion and summary of Currie. *Id.* at 12–14; *see generally* '601 Apple IPR.

Moreover, Patent Owner agrees that we did *not* construe the term "biometric signal" in our Final Written Decision in the '601 Apple IPR. PO Supp. Resp. 5 (stating "Petitioner's argument that the Board's construction is inconsistent with the Apple FWD (Paper 59, p. 5) is incorrect. First, the Board did not construe 'biometric signal' in the Apple

['601] IPR. Paper 47, p. 56, fn. 27.[40] There is, therefore, no construction with which to be inconsistent.").

In our Final Written Decision in the '601 Apple IPR, we construed three terms requested by Patent Owner, which were constructions for (1) the term "accessibility attribute;" (2) the phrase requiring a series of entries of the biometric signal "characterised according to at least one of the number of said entries and a duration of each said entry"; and (3) the "populate" the database limitation concerning enrolling or authorizing new users. *See* '602 Apple IPR, Paper 31, 17–34. We did not construe in our Final Written Decision in the '601 Apple IPR, the term "biometric signal."

j) Claim Construction Conclusion for "Biometric Signal"

We recognize that "[t]he very nature of words would make a clear and unambiguous claim a rare occurrence." *Autogiro Co. of Am. v. United States*, 384 F.2d 391, 396 (Ct. Cl. 1967). The Federal Circuit, however, has provided a beacon, which we have followed, to guide us in determining the proper construction when we encounter ambiguities or differing interpretations from the parties:

> Ultimately, the interpretation to be given a term can only be determined and confirmed with a full understanding of what the inventors actually invented and intended to envelop with the claim. The construction that stays true to the claim language and

[40] The citation to "Paper 47, p.56, fn. 27" is a citation to our Final Written Decision in IPR2022-01006, challenging the '705 patent. More directly applicable to the proceeding before us is our Original Final Written Decision in the case before us, which is IPR2022-01045, Paper 42, page 59, footnote 30. This footnote 30 is identical to the footnote 27 cited by Patent Owner in the related 01006 IPR.

> most naturally aligns with the patent's description of the invention will be, in the end, the correct construction.

Renishaw PLC v. Marposs Societa' per Azioni, 158 F.3d 1243, 1250 (Fed. Cir. 1998) (citations omitted).

Based on the evidence and the analysis above, we determine that the term "biometric signal" means a physical or behavioral biometric attribute. This is the construction that stays true to the claim language and most naturally aligns with the patent's description of the invention. It also is supported by the extrinsic evidence, expert testimony, and Patent Owner's admissions.

Based on the evidence, there is no bright-line distinction for what specific biometric attribute is "physical" or "behavioral." The specific category, however, is not relevant because neither the Specification nor the claims establish that the generic term "biometric signal" is limited to the examples in the Specification or to a specific sub-category of a "physical" or "behavioral" attribute. When the '208 patent intended to limit the type of biometric signal, or the compatible biometric sensor, it did so in claim 4, as discussed above.

We now address the merits of Petitioner's challenge of the '208 patent.

D. Ground 1: Patentability of Claims 1, 3–5, and 9-13 Over Bianco and Mathiassen-067

Petitioner asserts claims 1, 3–5, and 9, and 10–13[41] are obvious over Bianco and Mathiassen-067. Pet. 11–71.

1. Bianco (Ex. 1003)

We make the following findings of fact regarding Bianco.

Bianco "relates . . . to the utilization of biometric measurements for the authentication of users[] and thus access[] to enterprise resources." Ex. 1003, 1:8–13. "Enterprise resources include computers, applications and data." *Id.* at 1:15–16. As disclosed in Bianco,

> [b]iometric devices utilize a scientific technique to identify a user based on compared measurements of unique personal characteristics. These measurements, called biometric measurements, may include, but are not limited to, measurements of finger and hand geometry, retina and facial images, weight, DNA data, breath, voice, typing stroke and signature.

Id. at 2:67–3:6,

[41] For claims 10–13, *see* IPR 2022-01089 Petition, 11–79.

Bianco's Figure 2, reproduced below, illustrates a block diagram of enterprise network system 202 incorporating biometric system 102 (reference character not shown) according to a preferred embodiment. *Id.* at 11:55–57.

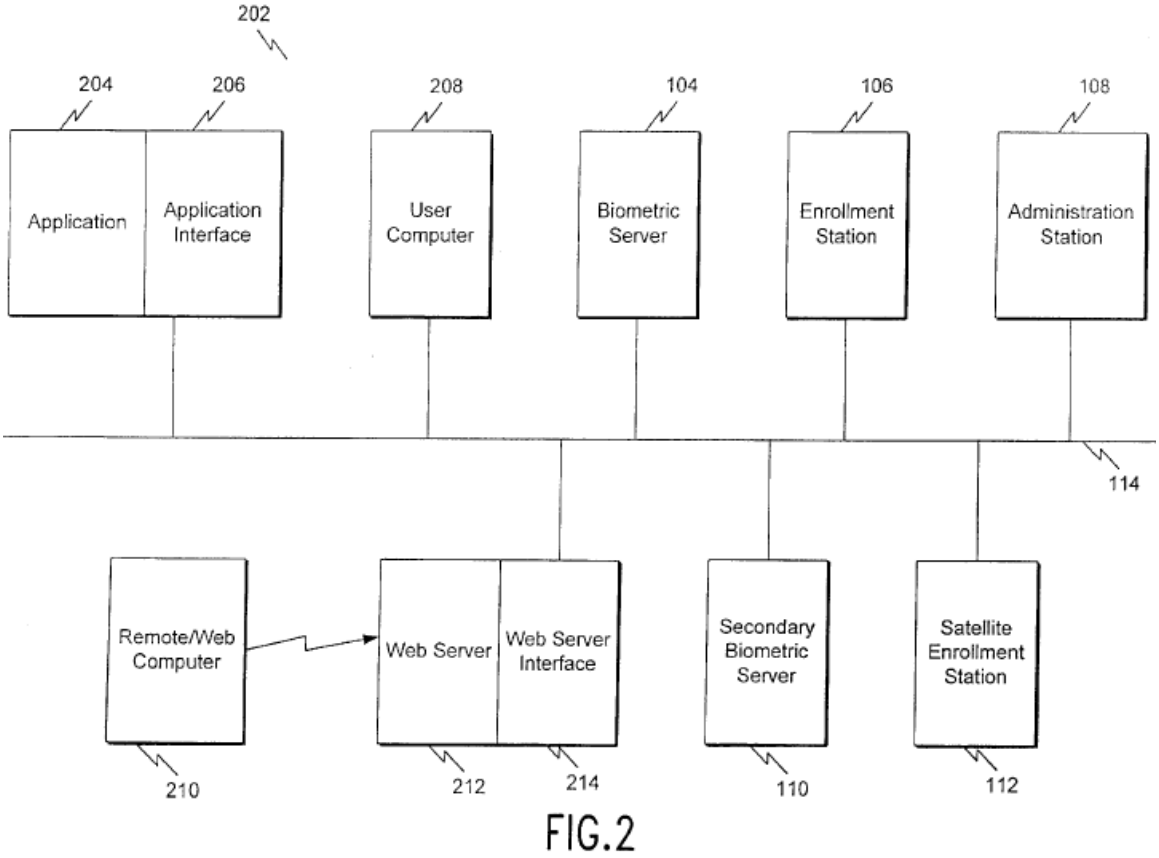

Bianco's Figure 2

Generally speaking, network 114 connects the functional components of biometric system 102 and additional functional components of network system 202. *Id.* at 12:7–9. Biometric system 102 includes biometric server 104, enrollment station 106, administration station 108, alternate biometric server 110, and satellite enrollment station 112. *Id.* at 9:52–55. The additional functional components include web server 212, web server

interface 214, and one or more of applications 204, application interfaces 206, user computers 208, and remote/web computers 210. *Id.* at 11:67–12:7.

In biometric system 102, biometric server 104 stores the engine for biometric system 102, e.g., collections of data required by system 102. *Id.* at 10:1–3. Administration station 108 is used by the administrator of biometric system 102 to perform management duties. *Id.* at 10:14–17. Enrollment stations 106, 112 enroll users into biometric system 102 and accordingly communicate with the biometric devices of biometric system 102 (satellite enrollment station 112 being scaled-down to enroll users at remote locations). *Id.* at 10:8–12, 23–24. Secondary biometric server 110 is a backup/standby server of biometric server 104. *Id.* at 10:28–29.

In the additional functional components, application 204 may include electronic mail and word processing. *Id.* at 12:11–12. Application interface 206 connects application 204 to network 114 and, thereby, to other resources or network system 202. *Id.* at 12:12–15. User computer 208 provides users access to the enterprise resources (to enterprise network 212) and includes both a biometric device and interface for authentication of the user by biometric system 102. *Id.* at 12:15–22. Remote/web computer 210 is also a user computer having the above functions, but operates remotely via communications with web server 212 and web server interface 214 (which collectively 212, 214 provide access to other enterprise resources such as biometric system 102). *Id.* at 12:23–30.

Biometric servers 104, 110, enrollment stations 106, 112, and administration station 108 can be implemented on computer 302 illustrated by Bianco's block diagram in Figure 3, reproduced below. *Id.* at 14:26–29.

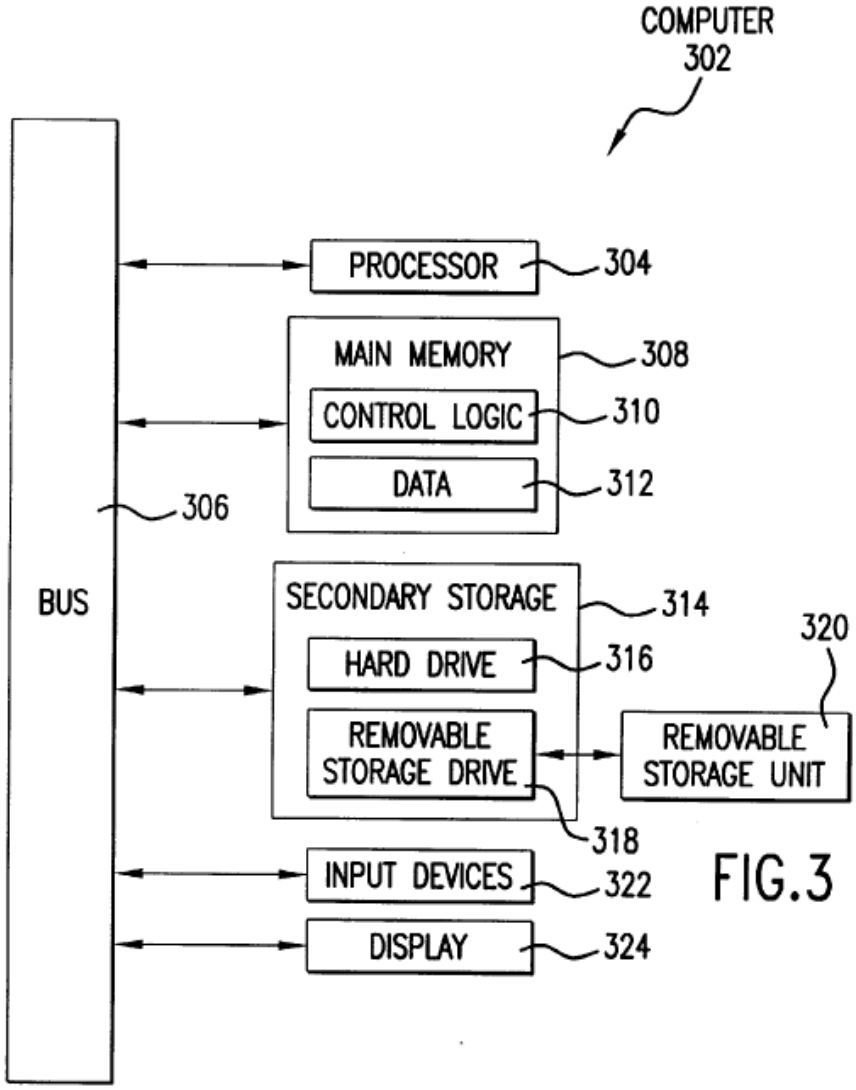

Bianco's Figure 3

Computer 302 includes one or more of the following items connected to communication bus 306: processor 304; main memory 308 storing control logic 310 (i.e., software) and data 312; secondary storage 314; input devices 322 (e.g., keyboard); and display devices 324 (e.g., monitors). *Id.* at 14:32–39.

Bianco's Figure 10, reproduced below, is a block diagram of objects involved in the disclosed biometric authentication. *Id.* at 25:60–62. It shows user computer 208 in communication with biometric server 104. *Id.* at Fig. 10.

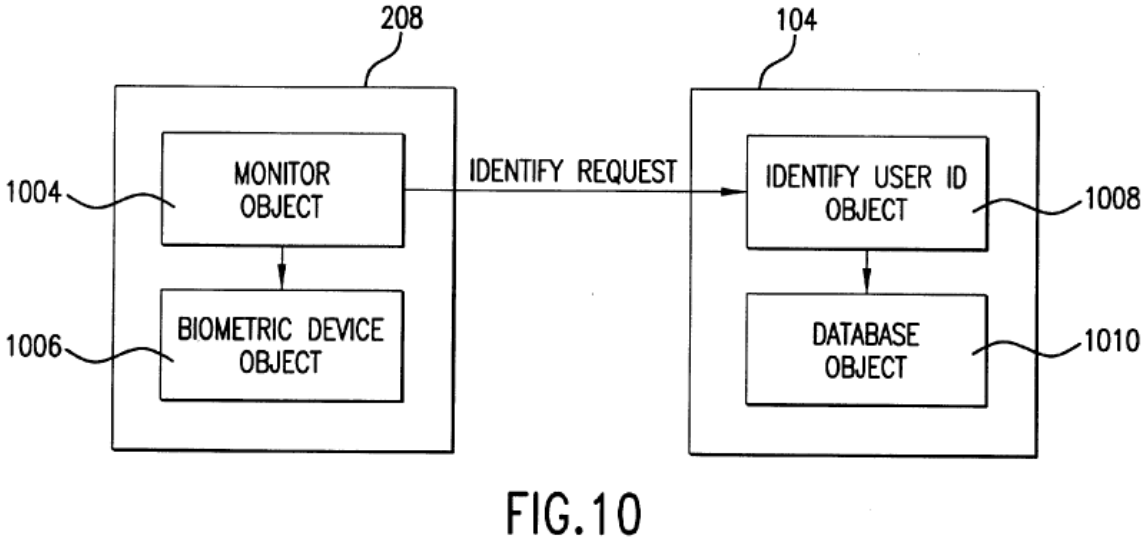

Bianco's Figure 10

User computer 208 (or remote/web computer 210) includes monitor object 1004 and biometric device object 1006. *Id.* at Fig. 10, 25:62–65. Biometric system 104 includes identify user ID object 1008 and database object 1010. *Id.*

Monitor object 1004 of user computer 208 is "up and waiting" to receive "live" biometric data (e.g., fingerprint data) that can "start" the engine of the biometric system 102 (i.e., initiate authentication of the user). *Id.* at 25:66–26:7; 10:1–3 (biometric server 104 stores the engine of biometric system 102). Monitor object 1004 generates biometric device object 1006 that prompts a biometric device to read and return the live biometric data. *Id.* at 26:8–18, Fig. 11 (steps 1102–06). Monitor object

1004 generates an "identify request" including the biometric data and sends the request to biometric server 104. *Id.* at 26:19–22, Fig. 11 (step 1108).

Using ID 512 of user computer 208, biometric server 104 identifies user ID object 1008 and provides the biometric data to object 1008. *Id.* at 26:22–27. User ID object 1008 has previously created data base object 1010 and stored therein a biometric template, biometric policy, biometric group, biometric device, user ID, computer ID, and application ID. *Id.* at 23:17–21, 26:27–31. User ID object 1008 passes the live biometric data to data base object 1010, which then attempts to match the live biometric data to the stored data (e.g., to the biometric template). *Id.* at 26:27–33, Fig. 11 (steps 1110–12). Successful matching is a condition of authentication. *Id.* at 26:34–39, Fig. 11 (steps 1114–18).

Bianco's Figure 12, reproduced below, is a block diagram of objects involved in the biometric enrollment. *Id.* at 26:53–55.

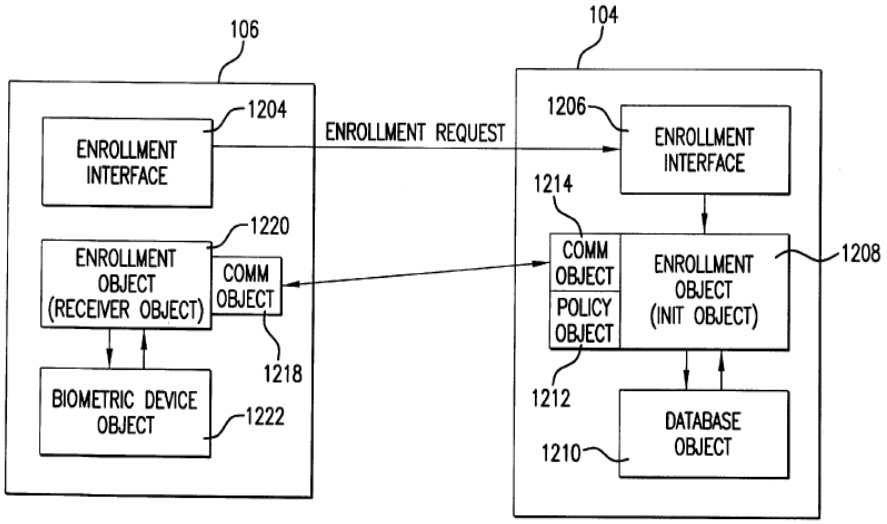

FIG. 12

Bianco's Figure 12

Figure 12 shows enrollment station 106 in communication with biometric server 104. *Id.* at 26:60–62. Enrollment station 106 includes

enrollment interface 1204, enrollment object 1220 with attached comm object 1218, and biometric device object 1222. *Id.* at 26:55–60; Fig. 12. Biometric server 104 includes enrollment interface 1206, enrollment object 1220 with attached comm object 1214 and policy object 1212, and database object 1210 (which is the above-discussed database object 1010 of Figure 10). *Id.* at 26:6–12, 55–60; Fig. 12.

Enrollment station 106 and biometric server 104 communicate via respectively a client role and server role. *Id.* at 26:60–62. Respective enrollment interfaces 1204, 1204 are any operating interfaces permitting client-server communication (e.g., specific to the given operating systems). *Id.* at 27:1–5. In response to communications of interfaces 1204, 1204 (see below), two-way direct communication is established between respective comm objects 1218, 1214. *Id.* at 15:57–16:19, 27:8–12, 57–60.

To start the enrollment process, a user inputs their user ID 510 to enrollment station 106. *Id.* at 27:29–31, Fig. 13 (step 1302). Enrollment interface 1204 generates an enrollment request including user ID 510 and then sends the request to biometric server 104. *Id.* at 27:31–39, Fig. 13 (step 1304).

In response to the request, biometric server 104 initializes enrollment object 1208. *Id.* at 27: 39–42, Fig. 13 (step 1306). Enrollment object 1208 creates database object 1210 and passes user ID 510 to object 1210. *Id.* at 27:45–46. Based on user ID 510, database object 1210 determines the user's biometric group 506 (whereto an administrator previously assigned the user). *Id.* at 27:46–50, Fig. 13 (steps 1308–10). Based on biometric group 506, database object 1210 determines biometric policy 504 (of the biometric group 506). *Id.* at 27:50–52. Database object 1210 creates

policy object 1212 providing biometric policy 504 (e.g., identifying the corresponding biometric device/s) and then passes policy object 1212 to enrollment object 1208. *Id.* at 27:53–57, Fig. 13 (steps 1312). Based on biometric policy 504, enrollment object 1208 requests enrollment station 106 to test the user on a particular biometric device. *Id.* at 27:60–65, Fig. 13 (steps 1316).

Based on the request, enrollment station 106 creates enrollment object 1220. *Id.* at 27:66–67, Fig. 13 (step 1318). Based on the particular biometric device, enrollment object 1220 creates biometric device object 1222. *Id.* at 27:67–28:2, Fig. 13 (step 1320). Biometric device object 1222 causes the respective, attached biometric device to read biometric measurements of the user (e.g., fingerprint measurements). *Id.* at 28:2–6, Fig. 13 (steps 1320–22). Based on the measurements, enrollment object 1220 generates biometric template 502 and then sends template 502 to enrollment object 1208 of biometric server 104 (where template 502 is stored by database object 1010/1210). *Id.* at 28:6–12, Fig. 13 (steps 1324–26).

2. Mathiassen-067 (Ex. 1004)

We make the following findings of fact regarding Mathiassen-067.

In the context of inputting information into mobile phones and computer devices, and providing access to the information in these products, Mathiassen-067 discloses using the same biometric (fingerprint) sensor for the dual purposes of (i) reading fingerprints for authentication and access

control and (ii) as a means of issuing commands/instructions through a series of "taps" of varying durations. Ex. 1004 Abstract; 21:9–21.[42]

Mathiassen-067 "relates to a sign/character generator represented by a fingerprint sensor with navigation means[] for text/sign input[.]" Ex. 1004, 3:3–5. Noting device access to sensitive information is typically via passwords for identity verification of the user, Mathiassen-067 instructs that "these are not personal as they can be given to other persons . . . or stolen" and "[a]ccordingly there is a strong trend to base access control on biometrics[.]" *Id.* at 3:14–21. As defined in Mathiassen-067, "biometrics" is a "mathematical description of characteristic elements of the owner's body or behaviour that can not be separated from this person, and which describes him uniquely." *Id.* at 3:21–24. Mathiassen-067 further criticizes the typical "[i]mplementation[s] of such sensors . . . [as] in many cases [raising] a question of available space on the device." *Id.* at 3:31–4:3.

Mathiassen-067 advises that "such identity verification devices[,] e.g., fingerprint sensors[,] will therefore be significantly enhanced if . . . combined with other functionality." *Id.* at 3:35–38. It is thus "an objective of [the] invention to provide a sign generator . . . through a single-button 'keyboard' . . . incorporat[ing] fingerprint scanning for authentication." *Id.* at 8:1–9.

---

[42] Citations to Mathiassen-067 are in the form of *exhibit* page number:line number[s]. We also note that the *exhibit* page number for Exhibit 1004, in the bottom right corner of each page of the exhibit, differs from the *document* page number, which is centered on the top of each page. Petitioner's *exhibit* page numbering is in accordance with our rules requiring each page of an exhibit to be "uniquely numbered in sequence." 37 C.F.R. § 42.63(d)(2).

In the described example, a smartphone includes touch sensor 1, analyzing means 2, memory 3, translation means 4, and display 5. *Id.* at 8:37–9:13. In one mode of operation, touch sensor 1 operates as a fingerprint sensor that can read a fingerprint and send a fingerprint signal that initiates the process of authorization to a controlled item. In a second mode of operation, touch sensor 1 operates as a touchpad and outputs data indicating the composition and motion of a finger movement. *Id.* at 8:39–9:2. Analyzing means 2 both measures the duration, direction, and speed of the finger's movement on the switch; and receives and categorizes the data output by switch 1. *Id.* at 9:2–4, 12–13 (Table 2, "Finger Command Structure"). Memory 3 stores the categories of data. *Id.* at 9:5. Translation means 4 maps (e.g., via tables) the categories (e.g., finger movements and sequences thereof) to user-readable characters/signs. *Id.* at 9:5–8. Display 5 presents the signs in a known manner. *Id.* at 9:8–10.

By reading both the fingerprint and its motion in the two separate and distinct operating modes, "single-button sensor" 1 (along with components 2–5 described above) combines biometric reading and signaling for user authentication and cursor-type control for text input. *Id.* at 10:21–25. In the text input mode, however, sensor 1 does *not* put out a fingerprint or other biometric signal; it puts out a "finger tap."

3. Independent Claims 1, 9, and 10

Petitioner provides a "Claim Listing" identifying, for each independent claim, each clause by a unique identifier. Pet. 94– 97 (*e.g.* clause 1[P] is the preamble of claim 1). Using the claim clause identifiers, Petitioner provides a detailed clause-by-clause analysis of the challenged claims, explaining where, in Petitioner's view, each element is disclosed in

the combination of Bianco and Mathiassen-067, and why the challenged claim, considered as a whole, would have been obvious over the combined disclosures of those references. Pet. 11–62. Throughout the analysis, Petitioner relies on the declaration testimony of Mr. Lipoff.

For claim 1, for example, for each "means-plus-function" limitation, Petitioner identifies the function and corresponding structure disclosed in the Specification. Petitioner then asserts where each claimed element is disclosed in either Bianco or Mathiassen-067 (Pet. 11–57) and concludes that "[i]t would have been obvious to modify Bianco's biometric authentication system to receive enrollment instructions using Mathiassen[-067]'s multiple finger-tap system" (*id.* at 57 (citing Ex. 1005 ¶¶ 214–228). According to Petitioner,

> a POSITA would have been **motivated** to modify Bianco's biometric sensor to also receive its instructions from a single biometric input sensor for simple enrollment and access, as taught by Mathiassen[-067], to avoid the expense and complexity of using a separate touchpad/keyboard/keypad and biometric input sensor, while having a smaller form-factor for convenient installation at doorways, access points, etc. Indeed, Mathiassen [-067] provides an express motivation that "it will be desirable to combine such a touch-pad and fingerprint sensor, if technically possible, for cost and space reasons."

Pet. 59 (emphasis in original).

Throughout Petitioner's assertions, Petitioner relies extensively on annotated figures from the references to illustrate its assertions. *See, e.g.*, *id.* at 15, 16, 18, 19, 30, 39, 44, 46. For claim 1, Petitioner's assertions are supported by the Declaration testimony of Mr. Lipoff. Ex. 1005 ¶¶ 63–228).

Petitioner provides a similar analysis for independent claim 10. '089 Pet. 11–79 (citing Ex. 1005 ¶¶ 262–423).

Patent Owner asserts that "neither Bianco nor Mathiassen[-067]—alone or in combination—teach or suggest at least limitations D(P)–D(3) of claim 1." PO Resp. 19 (citing Ex. 2031 ¶ 51). The labels "D(P)–D(3)" refer to the paragraph and clause limitations used by Petitioner. For convenient reference, we list below these clauses and their limitations in representative claim 1.

> [D(P)] wherein the transmitter sub-system controller further comprises means for populating the data base of biometric signatures, the populations means comprising:
>
> [D(1)] means for receiving a series of entries of the biometric signal, said series being characterised according to at least one of the number of said entries and a duration of each said entry;
>
> [D(2)] means for mapping said series into an instruction; and
>
> [D(3)] means for populating the data base according to the instruction.

Pet. 94.

The focus on clauses D(P)–D(3) is Patent Owner's sole substantive defense concerning patentability of the challenged claims. Patent Owner asserts that "[l]imitations corresponding to D(P)–D(3) are present in all independent claims of the '208 Patent. Therefore, Petitioners fail to prove that any claims of the '208 Patent are unpatentable." PO Resp. 19–20.

According to Patent Owner, "[i]n short, and critically important to the issues here, each of the limitations D(P)–D(3) are based upon and require some step or action related to a ***biometric signal***." *Id.* at 20 (emphasis in original). We note that our construction of the claim term "biometric signal" in Section III.C.2 of this Decision is different from the construction proposed by Patent Owner.

Our analysis uses the clause designations relied on by the parties.

a) Limitation [D(P)]
"wherein the transmitter sub-system controller further comprises means for populating the data base of biometric signatures, the population means comprising"

Petitioner states the function of this means-plus-function clause is "populating the database with at least one biometric signature." Pet. 40. According to Petitioner, the structure disclosed for performing this function is "a computer program product having a computer readable medium having a computer program recorded therein, with code for populating the biometric-signature database." *Id.* Patent Owner does not dispute or comment on this proposed construction. For purposes of this Decision, we adopt Petitioner's proposed construction.

This limitation provides an introduction to the requirements for the "transmitter sub-system controller," wherein the "population means" is further defined in in three additional sub-limitations (labeled by Petitioner as Limitations D(1), D(2), and D(3)), which are also in means-plus-function form. Patent Owner does not address the merits of this introductory clause, but provides arguments on sub-limitations D(1), D(2), and D(3), discussed below.

Petitioner provides the following annotated Figure 3 from Bianco. Pet. 15.

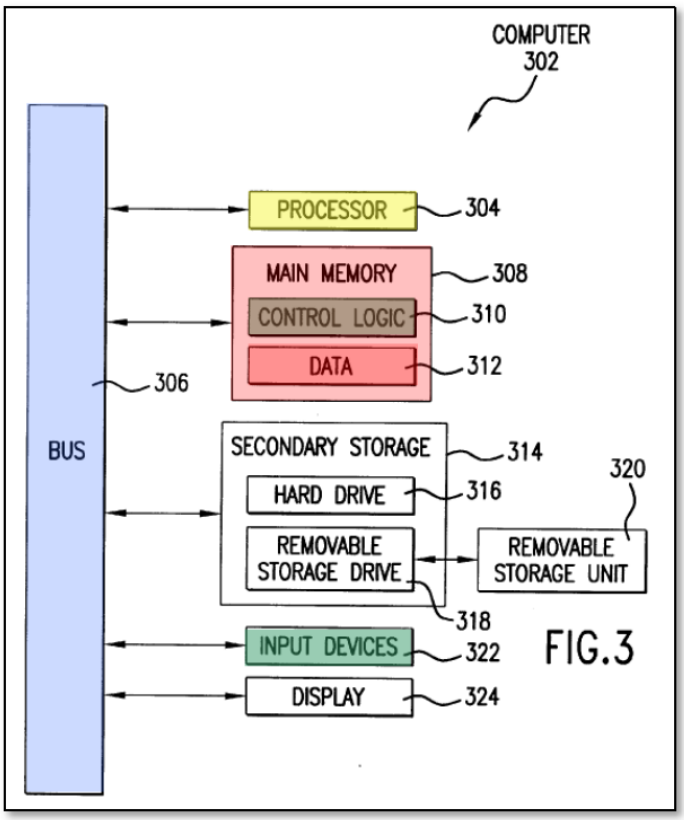

Figure 3 from Bianco is a block diagram, annotated by Petitioner, of a typical enterprise network system incorporating one embodiment of the biometric authentication system disclosed in Bianco. Ex. 1003, 3:57–58. Petitioner asserts that Processor 304 is the claimed "controller." Pet. 15. Additionally, Petitioner asserts that Bianco's processor 304, transmitting over bus 306, also is the "transmitter." *Id.* Petitioner asserts that this is the same structure and system used in the'208 patent, where processor/controller 107 may also be the transmitter. *Id.* (citing Ex. 1007, Fig. 2).

Patent Owner does not dispute that Bianco discloses a transmitter sub-system controller, as required by clause [D(P)].

b) Limitation [D(1)]
"means for receiving a series of entries of the biometric signal, said series being characterised according to at least one of the number of said entries and a duration of each said entry"

Petitioner states the function of this means-plus-function clause is "receiving a series of entries of the biometric signal." Pet. 41. According to Petitioner, the structure disclosed for performing this function is "a computer program product having a computer readable medium having a computer program recorded therein, with **code for receiving a series of entries of the biometric signal**." *Id.* (emphasis in original). Patent Owner does not dispute or comment on this proposed construction. For purposes of this Decision, we adopt Petitioner's proposed construction.

It is Petitioner's position that "Bianco discloses receiving multiple biometric entries, each of which has a duration." *Id.* at 42. Petitioner uses a "signature" biometric signal, as disclosed in Bianco, as an example. *Id.*

When performing biometric "signature" analysis, Bianco discloses taking "multiple samples of a signature" and analyzing "each sample." *Id.* (citing Ex. 1003, 8:43–45) ("Here, a user is prompted for multiple samples of a signature. For each sample, characteristics or measurements are identified."). Bianco also discloses that "[t]he characteristics or measurements include the pressure, sequence of events, direction, relative vectors and speed" of the signature. Ex. 1003, 8:45–47.

Patent Owner asserts that "a hand-written signature [as disclosed in Bianco] is a behavioral attribute, not a physical biometric attribute." PO Resp. 21. Patent Owner then concludes that "the hand-written signature of Bianco is not a 'biometric signal' as that term is properly construed in the

'208 Patent - *i.e.*, a 'physical attribute of the user (i.e., fingerprint, facial pattern, iris, retina, voice, etc.).'" PO Resp. 21. We disagree.

Based on our claim construction of the term "biometric signal" in this Decision, Bianco's "signature" is a "biometric signal," just like a fingerprint, voice, retinal or iris pattern, face pattern, or palm configuration. Bianco clearly relies on a "signature" as "a physical or behavioral biometric attribute that provides secure access to a controlled item," which is how we have construed the term "biometric signal."

Petitioner asserts that Mathiassen-067 discloses "using the number/duration of the finger presses on the biometric sensor to issue an instruction." Pet. 43. According to Petitioner, Mathiassen-067 discloses "using the same fingerprint sensor (*i.e.*, biometric sensor) for the dual purposes of: (i) reading fingerprints for enrollment, authentication, and access control and (ii) receiving commands through a series of finger inputs of varying durations. *Id.* (citing Ex. 1004, 21:15–19). *Id.*

As disclosed in Mathiassen-067, the:

> preferred embodiment of the invention enables a multi-function single-button input key which combines several functions;
>
> - Fingerprint scanning for user authentication for access control.
>
> - A powerful text input device where sets of extensive finger commands supports convenient and fast input of complex text/signs/characters in a versatile and flexible manner for text input of alphabetic languages and sign-based languages

Ex. 1004, 23:25–34.[43]

---

[43] Again we note that we cite the *exhibit* page number for Exhibit 1004, in the bottom right corner of each page of the exhibit, which differs from the *document* page number, which is centered on the top of each page.

In addition, Mathiassen-067 also discloses using a series of short and long taps for entering control commands, as is done in the ’208 patent. Mathiassen-067 discloses:

> Word separation may be done by finger command <Long Tap> and period (‘punctum’) may be entered as two consecutive <Long Taps>, etc. The user may at any time toggle to Edit Text Mode by finger command sequence <Extra long Tap> - <Finger Down> as per Table 2.

Ex. 1004, 16:14–19. Table 2 appears on pages 12–13 of Mathiassen-067. A highlighted excerpt from Table 2, prepared by Petitioner (*see* Pet. 44) and reproduced below, illustrates some of the various commands that can be entered in Mathiassen-067 using the Morse code-like series of finger presses.

Edit Text Commands			
Home of Text Field	<Slanted Up Left>	Toggle to/from Edit Mode	*See Screen Manip. Commands*
End of Text Field	<Slanted Down Right>	Mark ***n*** characters left	<Long Tap> + ***n*** <Short Taps>
Move one position left	<Finger Left>	Mark ***n*** words left	<Long Tap> + ***n*** <Finger Left>
Scroll left	<Finger Left - Hold>	Shift marked letters' case	<Long Tap>
Move one position right	<Finger Right>	Delete marked character(s)	<Extra Long Tap>
Scroll right	<Finger Right - Hold>	Copy marked character(s)	<Double Tap>
One line up	<Finger Up>	Paste marked character(s)	Two <Double Taps>
Scroll up	<Finger Up - Hold>	Insert space right of cursor	<Short Tap>
One line down	<Finger Down>	Write to right of cursor	*Exit Edit to Input Mode*
Scroll down	<Finger Down - Hold>		

Patent Owner also argues the "finger movements" and "finger commands" disclosed in Mathiassen-067 "are not entries of a biometric signal." PO Resp. 21. Patent Owner asserts that "they are merely the touching of a touch-sensitive pad during which no biometric measurement is taken at all." *Id.* (citing Ex. 2031 ¶ 53). Patent Owner further asserts that "[b]ecause the '208 Patent claims require entries of a biometric signal that is characterized by a number and a duration, the finger presses of Mathiassen [-067] – which are not biometric entries at all – do not teach or suggest these '208 Patent claim limitations." PO Resp. 21–22.

Here we agree with Patent Owner. As Patent Owner reasons, and we agree, there is a substantive distinction between the *finger press* command entry function and the *fingerprint* user authentication function in Mathiassen-067. Both functions use the same "touch sensitive switch 1, in the form of a fingerprint sensor with navigation means." Ex. 1004, 8:39–9:1. Mathiassen-067 discloses, however, that there are two independent and distinct operating modes for these two independent and distinct functions. As we explain below, Petitioner has not shown adequately that in the finger press command entry function, Mathiassen-067 detects a fingerprint or other biometric signal.

Mathiassen-067 provides the following description of the operation of its multi-function single-button input key:

> Prior to this text input (when the cellular phone is switched ON) the cellular phone has automatically set the switch 1 to *authentication mode for access control to the cellular phone*. The user is then asked by text on the display to wipe his finger down over the sensor. When authentication by finger print biometrics is completed, the cellular phone sets the sign-generator to sleep mode, for energy saving. The sign-generator is then waked up e.g. when a request for the sign-generator is called for, e.g. by SMS input as per above. If the user wants to play a game on the cellular phone its control system sets the switch 1 to *Cursor Control Mode* as per Table 3a. *Two-dimensional finger moves combined with combined finger command sequences (such as taps, etc.) thereby gives an accurate cursor control combined with numerous command functions for quite complex games*. This example demonstrates that the invention is capable of rendering full input versatility and flexibility even through a single-button sign-generator, thereby enabling the use of a large display as exemplified in fig. 2 still maintaining full functionality.

Ex. 1005, 16:22–17:2 (emphases added).

Dr. Russ testifies that "when the switch is in its navigation [or cursor control] mode it does not take biometric readings or measurements." Ex. 2031 ¶ 62. Dr. Russ further opines that "when the Mathiassen[-067] device is in navigation [cursor control] mode it does not 'map a series,' characterized by a number or a duration of a biometric signal 'into an instruction'" Ex. 2031 ¶ 66.

The evidence of record indicates that switch 1, a fingerprint sensor, does not, in fact, act as a fingerprint sensor when switched to the cursor command mode. In that regard, we credit the testimony of Dr. Russ, who testifies that "Mathiassen [-067] teaches that the mode for fingerprint authentication (i.e., Access Control Mode) is separate and distinct from the modes for navigation (i.e., Text Input Modes and Cursor Control Mode)." *Id.* at ¶ 71 (referring to Table 3a of Mathiassen-067). Dr. Russ' testimony is supported by, e.g., Table 3a (*see* Ex. 1004, 14), reproduced below.

Table 3a
MODE LEVEL 1
Automatically set by the Device

ACCESS CONTROL MODE	TEXT INPUT MODES	CURSOR CONTROL MODE
Fingerprint sensor used for User Authentication	See Table 3b "Mode Level 2"	For cursor navigation on display

Petitioner's expert, Mr. Lipoff, testified at his deposition that "finger commands [ ] are entered upon the same biometric sensor that can be used for validating the fingerprint, but there's no disclosure one way or the other as to whether it's also reading the fingerprint." Ex. 2034, 66:11–24.[44] Thus,

[44] We cite to the exhibit page number, not the document page number.

Mr. Lipoff agrees that there is no evidence establishing that the sensor in Mathiassen-067 in fact receives a series of entries of the *biometric signal* and then, as required in Limitation D(2), maps the entered series into an instruction.

Based on the evidence of record, we find that, as disclosed in Mathiassen-067 and discussed above, when Mathiassen-067 switches to text input mode or cursor control mode, it exits access control mode and is no longer functioning as a fingerprint sensor.

For the foregoing reasons, Petitioner fails to persuade us that the combination of Bianco and Mathiassen-067 teaches or suggests Limitation D(1).

c) Limitation [D(2)]
"means for mapping said series into an instruction"

As discussed above, because Mathiassen-067 does not acquire a "series of entries of the biometric signal," it cannot map such a series into an instruction.

Thus, also for the reasons discussed above in connection with Limitation D(1), Petitioner fails to persuade us that the combination of Bianco and Mathiassen-067 teaches or suggests Limitation D(2).

d) Limitation [D(3)]
"means for populating the data base according to the instruction."

Because Mathiassen-067 does not create the required "instruction," as discussed above, it cannot populate the data base according to such an instruction.

Thus, also for the reasons discussed above in connection with Limitation D(1), Petitioner fails to persuade us that the combination of Bianco and Mathiassen-067 teaches or suggests Limitation D(3).

IV. CONCLUSION

All of the challenged independent claims include claim limitations substantively identical to limitations D(1), D(2), and D(3) discussed above. Because we conclude that the cited references do not disclose or suggest these claim limitations, Petitioner has *not* met its burden to establish by a preponderance of the evidence that any of the challenged claims are unpatentable.

V. ORDER

In consideration of the foregoing, it is hereby:

ORDERED that, that Petitioner has not shown by a preponderance of the evidence that any of claims 1–13 are unpatentable; and

FURTHER ORDERED that, because this is a Final Written Decision, the parties to the proceeding seeking judicial review of the decision must comply with the notice and service requirements of 37 C.F.R. § 90.2.

VI. SUMMARY TABLE

Claim(s)	35 U.S.C. §	Reference(s)/Basis	Claim(s) Shown Unpatentable	Claim(s) Not shown Unpatentable
1, 3–5, 9, 10–13	103	Bianco, Mathiassen-067		1, 3–5, 9, 10–13
2, 6, 7	103	Bianco, Mathiassen-067, Houvener		2, 6, 7
8	103	Bianco, Mathiassen-067, Houvener, Richmond		8
Overall Outcome				1–13

For PETITIONER:

Lionel M. Lavenue
Kara A. Specht
Benjamin A. Saidman
Sydney R. Kestle
FINNEGAN, HENDERSON, FARABOW
lionel.lavenue@finnegan.com
kara.specht@finnegan.com
benjamin.saidman@finnegan.com
safiya.aguilar@finnegan.com

For PATENT OWNER:

Michael Rye
Steven M. Coyle
Nicholas A. Geiger
CANTOR COLBURN LLP
mrye@cantorcolburn.com
scoyle@cantorcolburn.com
ngeiger@cantorcolburn.com