Trials@uspto.gov
571-272-7822

Paper 14
Date: January 3, 2023

UNITED STATES PATENT AND TRADEMARK OFFICE

BEFORE THE PATENT TRIAL AND APPEAL BOARD

TOYOTA MOTOR CORP.,
Petitioner,

v.

INTELLECTUAL VENTURES II LLC,
Patent Owner.

IPR2022-01127
U.S. Patent No. 10,292,138 B2

Before SCOTT A. DANIELS, FREDERICK C. LANEY, and MATTHEW S. MEYERS, *Administrative Patent Judges*.

DANIELS, *Administrative Patent Judge*.

DECISION
Denying Institution of *Inter Partes* Review
35 U.S.C. § 314

I. INTRODUCTION

Toyota Motor Corp. ("Petitioner"), filed a Petition requesting *inter partes* review ("IPR") of claims 1–14 of U.S. Patent No. 10,292,138 B2

(Ex. 1001, "the '138 patent"). Paper 1 ("Pet."). Intellectual Ventures II LLC ("Patent Owner") filed a Preliminary Response to the Petition. Paper 10 ("Prelim. Resp."). Petitioner filed a Reply to the Preliminary Response. Paper 12 ("Reply"). Patent Owner filed a Sur-Reply to Petitioner's Reply. Paper 13 ("Sur-Reply").

Under 35 U.S.C. § 314(a), an *inter partes* review may not be instituted "unless . . . there is a reasonable likelihood that the petitioner would prevail with respect to at least 1 of the claims challenged in the petition." Upon consideration of the arguments and evidence presented by Petitioner, we are not persuaded that Petitioner has demonstrated a reasonable likelihood that it would prevail in showing the unpatentability of at least one of the challenged claims. *See* 35 U.S.C. § 314(a). Accordingly, we do not institute an *inter partes* review of the challenged claims.

A. Real Parties in Interest

Petitioner states that Toyota Motor Corp., Toyota Motor North America, Inc., Toyota Motor Engineering & Manufacturing North America, Inc., and Toyota Motor Sales, U.S.A., Inc., are the real parties in interest. Pet. 73. Patent Owner states that Intellectual Ventures II LLC is the real party in interest. Paper 5, 2.

B. Related Matters

The parties indicate that the '138 patent is asserted in the following lawsuits, including, I*ntellectual Ventures I LLC et al. v. Toyota Motor Corp. et al.*, 2:21-cv-00389 in the U.S. District Court for the Eastern District of Texas; *Intellectual Ventures I LLC et al. v. General Motors Company*, 6:21-cv-01088 in the U.S. District Court for the Western District of Texas; and *Intellectual Ventures I LLC et al. v. Honda Motor Company, Ltd. et al.*, 3:22-cv-00761 in the U.S. District Court for the Northern District of Texas;

and *Intellectual Ventures I LLC and Intellectual Ventures II LLC, v. Honda Motor Co., Ltd. et al.* 2:21-cv-00390 in the U.S. District Court for the Eastern District of Texas.

Petitioner also indicates that the '138 patent has been involved in the following *inter partes* review proceedings: *Ericsson Inc. and Telefonaktiebolaget LM Ericsson v. Intellectual Ventures II LLC*, IPR2018-01289; and *Sprint Spectrum L.P., SprintCom, Inc., TMobile USA, Inc., and T-Mobile US, Inc. v. Intellectual Ventures II LLC*, IPR2018-01765. Pet. 74.

C. The '138 Patent (Ex. 1001)

The '138 patent, titled "Determining Buffer Occupancy and Selecting Data for Transmission on a Radio Bearer," relates to allocation of bandwidth resources for Internet Protocol data flows in a wireless network. Ex. 1001 code 54, 1:23–25. The '138 patent explains that "[t]he invention is applicable to, but not limited to, gateway queuing algorithms in packet data transmissions, for example, for use in the universal mobile telecommunication standard." *Id.* at 1:25–28.

Figure 1 of the '138 patent, as annotated by Petitioner, is reproduced below illustrating standard radio access network system 100. *Id.* at 6:12–13.

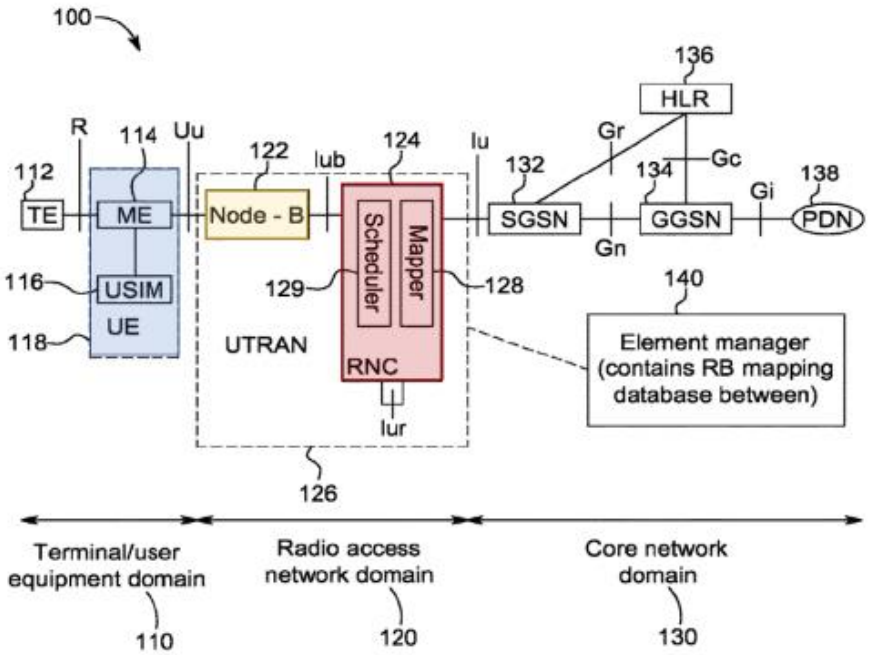

FIG. 1

Figure 1 illustrates user equipment (UE) 118 communicating data with Node – B 122 which, in turn, communicates data with radio network controller (RNC) 124 within UTRAN (UMTS Radio Access Network) 126. The '138 patent explains that

> [t]he UE may be for example a remote unit, a mobile station, a communication terminal, a personal digital assistant, a laptop computer, an embedded communication processor or any communication element communicating over the air interface of the cellular communication system.

Id. at 6:22–27. The '138 patent describes that within the RNC 124, "a Mapper 128 is responsible for mapping IP packets to separate RBs [radio bearer's] . . . [a] scheduler 129 is responsible *for allocating a certain proportion of the radio resource to each of the RBs*."[1] *Id.* at 7:49–53. (emphasis added). In addition, the '138 patent provides that

[1] Radio bearers, "RBs," are also understood by those of ordinary skill in the art as Radio Access Bearer's, "RABs." Ex. 1003 ¶ 39.

> element manager logic 140 has been incorporated into the system, which is used to contain the database that defines the mapping characteristics for IP packets to RBs. The element manager logic 140 also contains the values of the queue weighting parameters, S_{tier}, as 60 described in more detail later.

Id. at 7:56–61.

The '138 patent describes a particular embodiment of the radio resource allocation in Figures 5 and 6 reproduced below.

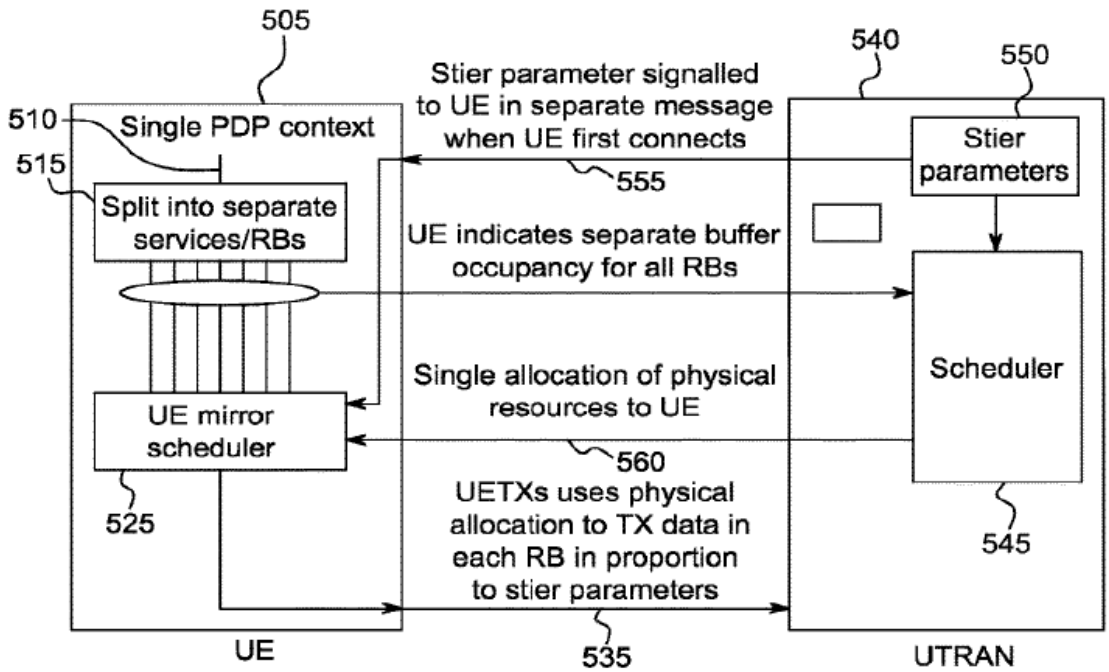

FIG. 5

Figure 5 illustrates "the communication between an UE 505 and the UTRAN 540 to support an uplink scenario." *Id.* at 10:3–5. The '138 patent explains that "the UE 505 may receive a single PDP [packet data protocol] context 510 and split the single PDP context 510 into separate services on individual radio bearers in divider logic 515." *Id.* at 10:5–8. The UE then informs scheduler 545 of buffer occupancies for the individual radio bearers, and scheduler 545 returns a single allocation of physical resources to UE based

on S_{tier} parameters 550. *Id.* at 10:8–18. Subsequently, "[t]he UE mirror scheduler 525 is then able to inform the UTRAN 540 in a message 535 on its use of the physical allocation, in order to transmit data in each radio bearer in proportion to the informed S_{tier} parameters 550." *Id.* at 10:18–22.

The '138 patent describes that W'_{tier} weight values are computed for each radio bearer data queue from the S_{tier} parameter (*id.* at 8:44–54) and that uplink data for each radio bearer is transmitted by dividing up the allocated bandwidth based on the W'_{tier} values (*id.* at 8:55–59, 10:23–28).

Figure 6, reproduced below as annotated by the Board, is a flow chart illustrating algorithm 600 that "describes one mechanism to limit a number of queues served at a single instant of time." *Id.* at 10:49–50.

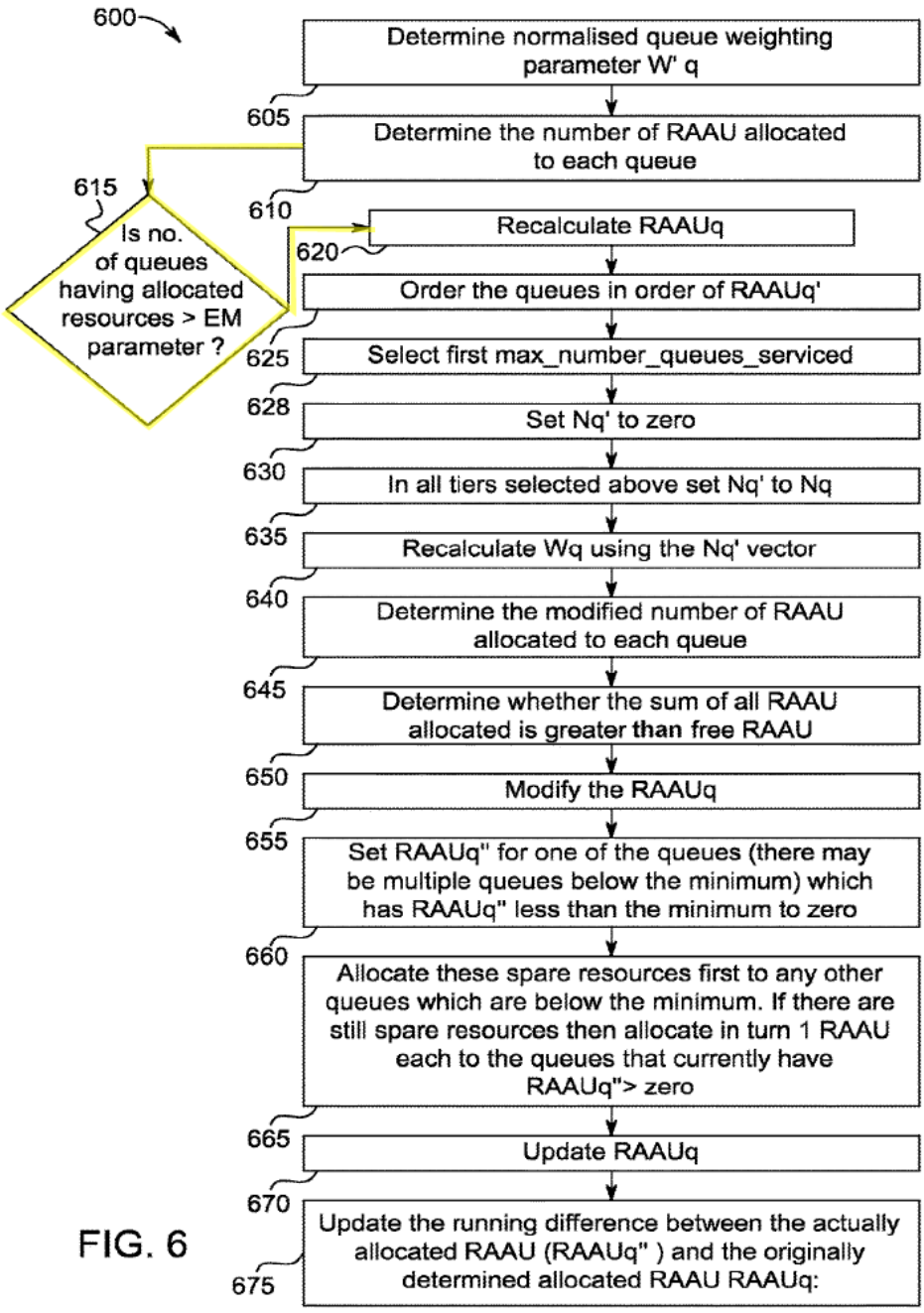

FIG. 6

Figure 6 details an algorithm that is run "when a number of active users (i.e. those users known to have a buffer occupancy greater than zero in any queue) is greater than a known fixed parameter, for example 'max_number_queues_serviced', as defined by the Element Manager (EM)."

Id. at 10:51–55. After determining the number of resources RAAU allocated to each queue at step 610,

> [t]he algorithm may then determine whether the number of queues that have resources allocated greater than the EM parameter-max_number_queues_serviced, as shown in step 615. If the number of queues that have resources allocated is greater than a threshold, for example the EM parameter max_number_queues_serviced, the process moves to step 620.

Id. at 11:11–17.

As depicted in Figure 6, from step 620 in a first iteration the algorithm begins a scheduling process for data packets where an amount of resources RAAUq are allocated according to a weighted average of the priority level of each input flow. *Id.* at 10:47–11:10. The weighting of each input flow using a counter or running backlog, running_RAAU_delta, tracks flows that have been previously denied transmission. *Id.* at 11:22–11:30. In a second iteration, the running backlog, added to the resources (RAAUq) allocated to a given radio bearer provides an adjusted RAAUq' at step 625. *Id.* at 11:31–33. Then, flows with lowest adjusted resource allocations RAAUq' are dropped, and the remaining resources RAAUq' are divided up among the surviving radio bearers. *Id.* at 11:38–44.

D. Illustrative Claim

Claims 1 and 8 are independent. Claims 2–7 each depend directly from claim 1, and claims 9–14 each depend directly from claim 8. Claim 1 is a method claim and illustrates the claimed subject matter and is reproduced below:

> 1. 1[preamble] A user equipment (UE) comprising:
>
> 1[a] a processor communicatively coupled to a transmitter and circuitry configured to receive; and

> the processor is configured to:
>
> 1[b] cause the circuitry to receive parameters associated with a plurality of radio bearers,
>
> 1[c] determine a plurality of buffer occupancies, wherein each of the plurality of buffer occupancies is associated with one or more radio bearers of the plurality of radio bearers,
>
> 1[d] cause the transmitter to transmit a message including the plurality of buffer occupancies to a network,
>
> 1[e] cause the circuitry to receive a single allocation of uplink resources,
>
> 1[f] select data from the plurality of radio bearers for transmission using the single allocation of uplink resources, wherein the selection of the data occurs using a first iteration and a second iteration,
>
> 1[g] wherein in the first iteration, the selection of the data is selected from a subset of the plurality of radio bearers based on the received parameters,
>
> 1[h] wherein in the second iteration, the selection of the data is based on buffered data for respective radio bearers, and
>
> 1[i] cause the transmitter to transmit a signal including the selected data.

Ex. 1001, 13:58–14:16.[2] Independent claim 8 is a method claim reciting "[a] method performed by a user equipment (UE), the method comprising." *Id.* at 14:33–34. Otherwise, independent claim 8 contains the same and similar limitations as claim 1, for example limitation 8[b] "receiving, by the UE, parameters associated with a plurality of radio bearers." *Id.* at 14:35–36.

[2] For consistency, we refer to Petitioner's claim limitations references 1[preamble]–1[i].

E. Prior Art and Asserted Grounds

Petitioner asserts that claims 1–14 would have been unpatentable based on the following grounds:[3]

Ground	Claim(s) Challenged	35 U.S.C. §	Reference(s)/Basis
1	1–4, 6–11, and 13–14.	102[4]	Peisa[5]
2	1–4, 6–11, and 13–14.	103(a)	Peisa
3	1–4, 6–11, and 13–14.	103(a)	Peisa and Heo[6]
4	5, 12	103(a)	Peisa and TS 24.008[7]

II. ANALYSIS

A. Legal Standards

A "prior art reference—in order to anticipate under 35 U.S.C. § 102—must not only disclose all elements of the claim within the four corners of the document, but must also disclose those elements 'arranged as in the claim.'" *Net MoneyIN, Inc. v. VeriSign, Inc.*, 545 F.3d 1359, 1369 (Fed. Cir. 2008) (quoting *Connell v. Sears, Roebuck & Co.*, 722 F.2d 1542, 1548 (Fed. Cir. 1983)). "A single prior art reference may anticipate without disclosing a feature of the claimed invention if such feature is necessarily present, or

[3] Petitioner supports its challenges with a Declaration of Robert Akl, Ph.D. (Ex. 1003). *See infra*.
[4] The Leahy-Smith America Invents Act ("AIA"), Pub. L. No. 112-29, 125 Stat. 284, 287–88 (2011 amended 35 U.S.C. §§ 102–103, effective March 16, 2013. Because the application from which the '138 patent issued has an effective filing date prior to March 16, 2013, the pre-AIA version of §§ 102–103 applies. *See* Ex. 1001, code (63).
[5] Ex. 1004, US Patent No. 6,850,540 B1 (Feb. 1, 2005).
[6] Ex. 1029, US Patent Publ'n No. 2005/0047416A1 (Mar. 3, 2005).
[7] Ex. 1005, 3RD GENERATION PARTNERSHIP PROJECT; TECHNICAL SPECIFICATION GROUP CORE NETWORK; MOBILE RADIO INTERFACE LAYER 3 SPECIFICATION; CORE NETWORK PROTOCOLS; STAGE 3 (Release 6), Global System for Mobile Communications, (2004).

inherent, in that reference." *Allergan, Inc. v. Apotex Inc.*, 754 F.3d 952, 958 (Fed. Cir. 2014).

A patent claim is unpatentable under 35 U.S.C. § 103 if the differences between the claimed subject matter and the prior art are such that the subject matter, as a whole, would have been obvious at the time the invention was made to a person having ordinary skill in the art to which said subject matter pertains. 35 U.S.C. § 103; *KSR Int'l Co. v. Teleflex Inc.*, 550 U.S. 398, 406 (2007). "[W]hen a patent claims a structure already known in the prior art that is altered by the mere substitution of one element for another known in the field, the combination must do more than yield a predictable result." *KSR*, 550 U.S. at 416 (citing *United States v. Adams*, 383 U.S. 39, 50–51 (1966)). The question of obviousness is resolved based on underlying factual determinations including: (1) the scope and content of the prior art; (2) any differences between the claimed subject matter and the prior art; (3) the level of ordinary skill in the art; and (4) when in evidence, objective evidence of non-obviousness. *Graham v. John Deere Co.*, 383 U.S. 1, 17–18 (1966).

B. Level of Ordinary Skill in the Art

Petitioner asserts that a person of ordinary skill in the art at the time of the '138 patent

> [w]ould would have had a Bachelor of Science in electrical engineering, computer engineering, or an equivalent field, as well as three years of experience in wireless communication technology, or a master's degree in electrical engineering, or other equivalent degree . . . [a]dditional education could substitute for professional experience and vice versa.

Pet. 3 (citing Ex. 1003 ¶¶ 47–49).

Patent Owner does not expressly dispute Petitioner's definition of a person of ordinary skill in the art. *See generally* Prelim. Resp.

On this record, Petitioner's proposed level of ordinary skill in the art is not disputed and is consistent with our review and understanding of the technology and descriptions in the '138 patent and the asserted prior art references. *Okajima v. Bourdeau*, 261 F.3d 1350, 1355 (Fed. Cir. 2001). For purposes of this Decision, we rely on Petitioner's proposed level of ordinary skill in the art.

C. Claim Construction

We interpret a claim "using the same claim construction standard that would be used to construe the claim in a civil action under 35 U.S.C. 282(b)." 37 C.F.R. § 42.100(b) (2020). Under this standard, we construe the claim "in accordance with the ordinary and customary meaning of such claim as understood by one of ordinary skill in the art and the prosecution history pertaining to the patent." *Id.* Furthermore, at this stage in the proceeding, we expressly construe the claims only to the extent necessary to determine whether to institute *inter partes* review. *See Nidec Motor Corp. v. Zhongshan Broad Ocean Motor Co.*, 868 F.3d 1013, 1017 (Fed. Cir. 2017) ("[W]e need only construe terms 'that are in controversy, and only to the extent necessary to resolve the controversy.'" (quoting *Vivid Techs., Inc. v. Am. Sci. & Eng'g, Inc.*, 200 F.3d 795, 803 (Fed. Cir. 1999))).

Petitioner contends that "[h]ere, no terms need construction because the claims read on the prior art identified below under any construction consistent with *Phillips*." Pet. 4. Patent Owner, on the other hand, proposes that the claim term "a subset of the plurality of radio bearers" means "less than all of the plurality of radio bearers." Prelim. Resp. 12. Patent Owner argues that

> [t]he "subset of the plurality of radio bearers" referred to in independent claim 1 of the '138 Patent (and independent claim 8) corresponds to the 'max_number_queues_serviced' parameter discussed above in connection with, e.g., Step 628. The 'max_number_queues_serviced' value clearly corresponds to *less than all* queues, because it is used when the number of active users "*is greater than*" the 'max_number_queues_serviced' value.

Id. at 13 (citing Ex. 1001, 10:52–54). Based on the written description, Patent Owner's declarant, Dr. Lomp testifies that the subset of radio bearers corresponds to "the 'max_number_queues_serviced' parameter discussed above in connection with, e.g., Step 628." Ex. 2001 ¶ 47. Dr. Lomp testifies further that "[t]he 'max_number_queues_serviced' value corresponds to *less than all* queues, because it is used when the number of active users '*is greater than*' the 'max_number_queues_serviced' value." *Id.* (citing Ex. 1001, 10:52–54). Dr. Lomp concludes that "[a] person of ordinary skill in the art, reading the claim in light of the specification, would understand the 'subset of the plurality of radio bearers' referred to in Claim 1 to mean 'less than all of the plurality of radio bears.'" *Id.*

Petitioner responds, arguing that "Patent Owner's plain-meaning construction in district court covers *both* less than and *all of the plurality of radio bearers*." Reply 1. Petitioner argues, specifically, that Patent Owner has indicated by its infringement contentions, that "subset" covers even the situation where, in the accused instrumentalities, "[a]ll the logical channels with Bj>0 are allocated resources in a decreasing priority order." *Id.* (citing Ex. 1008, 30). We appreciate that within the context of its infringement contentions Patent Owner may be advocating for a broader scope of "subset" in the district court litigation, perhaps in an attempt to encompass certain accused devices and functionality. Ex. 1008, 30. However, such

infringement contentions, and any relevant claim constructions with respect to infringement, are the purview of the district court. Our jurisdiction is confined mainly to patentability, and in this proceeding Patent Owner expressly argues that the "subset" limitation means "less than all of the plurality of radio bearers." For the reasons below, we agree with Patent Owner's proposed construction that "a subset of the plurality of radio bearers," means "less than all of the plurality of radio bearers."

First, the plain language itself supports Patent Owner's construction. *See TQ Delta, LLC v. DISH Network LLC*, 929 F.3d 1350, 1357 (Fed. Cir. 2019) ("We begin our analysis with the claim language."). Read in context, claim 1 recites in part:

> the processor is configured to:
>
> 1[b] cause the circuitry to receive parameters associated with *a plurality of radio bearers*,
>
> . . .
>
> 1[f] select data *from the plurality of radio bearers* for transmission using the single allocation of uplink resources, wherein the selection of the data occurs using a first iteration and a second iteration,
>
> 1[g] wherein in the first iteration, the selection of the data is selected *from a subset of the plurality of radio bearers* based on the received parameters,

Id. at 13:61–14:11 (emphasis added).

Claim 1 initially recites "a plurality of radio bearers" in limitation 1[b] which plainly means more than one radio bearer. *Id.* at 13:63. With this antecedent basis, the processor will at limitation 1[f] "select data from the plurality of radio bearers." *Id.* at 13:6. What is not clear, initially, is whether data is required to be selected from all radio bearers, or less than all radio bearers, because the claim does not specify, e.g., "all," "each," or "at

least one of" the plurality of radio bearers. A plain reading of the claim, up until this point, is that the processor can select data from all *or* less than all radio bearers. *Id.* at 14:5–6.

The following limitation 1[g], however, provides that "in the first iteration . . . data is selected from *a subset* of the plurality of radio bearers." *Id.* at 14:10–11 (emphasis added). This clause does not simply reiterate "the plurality of radio bearers," but expressly adds "a subset." The word "subset" plainly modifies "a plurality of radio bearers," and must have some limiting meaning. For example, if we were to interpret "subset" as encompassing all or less than all of the radio bearers as Petitioner asserts, than the word, i.e., limitation, "subset" is entirely unnecessary, given that the claim already provides such broader meaning. *See Stumbo v. Eastman Outdoors, Inc.*, 508 F.3d 1358, 1362 (Fed. Cir. 2007) (denouncing claim constructions that render phrases in claims superfluous). *See Bicon Inc. v. Straumann Co.*, 441 F.3d 945, 950 (Fed. Cir. 2006) ("[C]laims are interpreted with an eye toward giving effect to all terms in the claim"). Indeed, if "a subset" can include data selected from *all the radio bearer's* then Petitioner's interpretation reads the term "subset" essentially, if not entirely, out of the claim.

We acknowledge that dictionary definitions of "subset" often provide two interpretations. For example, Dictionary.com provides that subset means "a set that is a part of a larger set," and alternatively, in mathematics, "a set consisting of elements of a given set that can be the same as the given set or smaller." https://www.dictionary.com/browse/subset (last visited December 26, 2022). Despite the mathematical concept that a subset can include *all*, or fewer, members of a given set, a plain reading of claim 1 is that "subset" must be something less than all radio bearer's, at least because as discussed above, we give credence to the word

"subset" as an express claim limitation. *See Becton, Dickinson & Co. v. Tyco Healthcare Grp., LP*, 616 F.3d 1249, 1257 (Fed. Cir. 2010) (The Federal Circuit refusing to adopt a claim construction which would render a claim limitation meaningless).

In addition, we disagree with Petitioner that Patent Owner's construction "imports a limitation" from the specification of the '138 patent. Reply 2. For one thing, Patent Owner's construction relies specifically on the word "subset," which is expressly recited in the claim. Furthermore, the specification provides an embodiment, i.e., the algorithm in Figure 6, where data is selected from a "limit[ed]" number of radio bearers. Ex. 1001, 10:37–42. The '138 patent describes "in an enhanced embodiment of the present invention, a mechanism to implement additional functionality to limit a total number of queues served, . . . this algorithm limits a number [of] queues that can be allocated resource at any one instance." *Id.* For Figure 6, the '138 patent further explains that

> [t]he algorithm [600] describes one mechanism to limit a number of queues served at a single instant of time. The algorithm may be run when a number of active users (i.e. those users known to have a buffer occupancy greater than zero in any queue) is greater than a known fixed parameter, for example 'max_number_queues_serviced', as defined by the Element Manager (EM).

Id. at 10:48–55. The '138 patent then explains that at step 615 "[i]f the number of queues that have resources allocated *is greater* than a threshold, for example the EM parameter max_number_queues_serviced, the process moves to step 620." *Id.* at 11:14–17 (emphasis added). Steps 605–630 from Figure 6, as highlighted by the Board, are reproduced below.

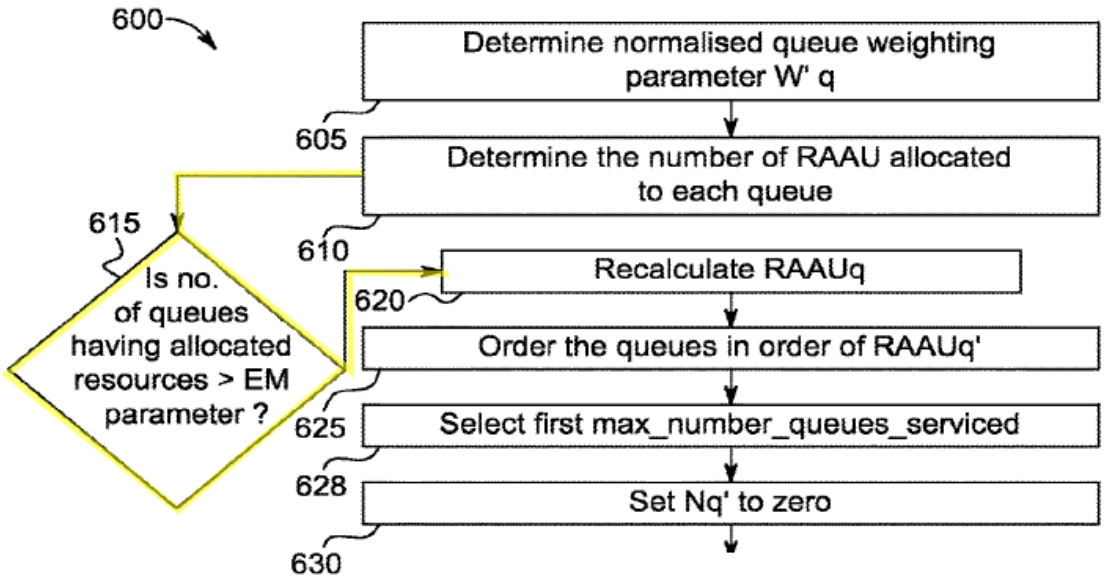

Figure 6 illustrates steps 605–630, where step 615, highlighted yellow, permits the continuation of algorithm 600 only where number of queues having allocated resources *is greater* than max_number_queues_serviced. Importantly, this embodiment does not describe that the algorithm continues where the number of queues with allocated resources is greater than *or equal* to the EM parameter, i.e., a threshold, but simply greater than the EM parameter. Then, to begin the claimed "first iteration" at step 628 the algorithm selects_max_number_queues_serviced (which is logically, and by operation of the algorithm at step 615, less then, i.e. a subset, of the number of queues having allocated resources). *Id.* at 10:65–66.

Consistent with the written description in the '138 patent specification, we credit Dr. Lomp's testimony explaining that

> [t]he "subset of the plurality of radio bearers" referred to in Claim 1 (and Claim 8) corresponds to the 'max_number_queues _serviced' parameter discussed above in connection with, e.g., Step 628. The 'max_number_queues_serviced' value corresponds to *less than all* queues, because it is used when the number of active users "*is greater than*" the 'max_number _queues_serviced' value.

Ex. 1002 ¶ 47 (citing Ex. 1001, 10:52–54). Dr. Lomp explains persuasively why a person of ordinary skill in the art "reading the claim in light of the specification, would understand the 'subset of the plurality of radio bearers' referred to in Claim 1 to mean 'less than all of the plurality of radio bears.'" *Id.* In this case, Patent Owner does not "improperly import[] a supposed limitation from the specification's discussion," as Petitioner argues, mainly because, the limitation is in fact in the claim—that is "a subset" is expressly recited as a specific limiting embodiment, as disclosed in Figure 6, which describes limiting allocation resources to less than all queues where the number of active users exceeds a threshold, "max_number_queues_ serviced."

Petitioner argues that the '138 patent "discusses that resources *may* be allocated to less than all queues *if* the number of active users exceeds a threshold, "max_number_queues_serviced." Reply 2. This alternative to which Petitioner refers, considers for example, if at step 615 the number of queues with allocated resources is equal to, or less than EM parameter. In this case, the algorithm in Figure 6 ends, and the process reverts to a different prior art process which is not incorporated in any relevant part in the algorithm of Figure 6 or independent claims 1 and 8. *See* Ex. 1001, 11:17–21. (The '138 patent explaining that "[i]f the number of queues that have resources allocated is not greater than the EM parameter max_number_queues_serviced then the process may operate as normal as described in the PCT publication WO 03/049320.").

Overall, we find Patent Owner's claim construction and Dr. Lomp's testimony the most persuasive and consistent with the express claim language itself, the written description and the algorithm and embodiment depicted in Figure 6. Accordingly, we determine that "a subset of the

plurality of radio bearers" means "less than all of the plurality of radio bearers." Prelim. Resp. 12.

D. Ground 1: Claims 1–4, 6–11, and 13–14 – Alleged Anticipation by Peisa (Ex. 1004)

On this record, Petitioner has not established a reasonable likelihood of prevailing on its assertion that at least one of claims 1–4, 6–11, and 13–14 are anticipated by Peisa, for the reasons explained below.

1. Peisa (Ex. 1004)

Peisa is titled "Packet Scheduling in a Communications System" and describes allocation of bandwidth resources where certain "embodiment(s) of the present invention enable packet scheduling in accordance with quality of Service (QoS) constraints for data flows in communications Systems." Ex. 1004, code 54, 2:49–51. Peisa's Figure 1 is reproduced below.

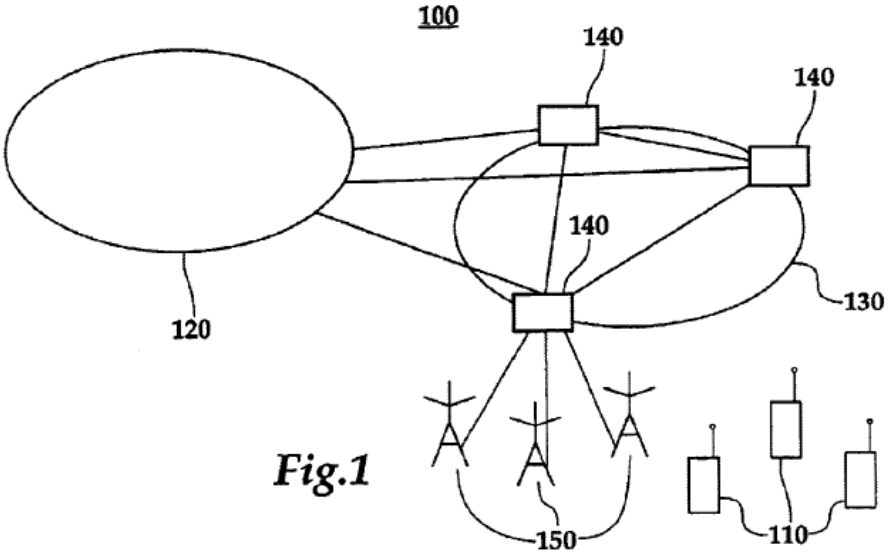

Fig.1

Figure 1 illustrates wireless communications network 100 including core network 120, user equipment ("UEs") 110 communicating with Node Bs 150, i.e., network towers, and radio network controllers ("RNC") 140

"responsible for routing user and signaling data between that Node B 150 and the core network 120." *Id.* at 2:6–8.

Peisa explains that "[u]ser and signaling data may be carried between an RNC 140 and a UE 110 using Radio Access Bearers (RABs)," and that "[t]ypically, a UE 110 is allocated one or more RABs, each of which is capable of carrying a flow of user or signaling data." *Id. at* 4:28–34. Peisa explains further that RNC 140 includes a media access layer ("MAC") that is responsible for scheduling, or prioritizing, packets to be sent to the UE. *Id.* at 4:34–40. As Peisa describes, "[p]riorities may be determined at the MAC entity (e.g., MAC-c or MAC-d) on the basis of RAB parameters." *Id.* at 5:14–16. RAB parameters include quality of service ("QoS"), where "a high QoS should be transmitted over the air interface at a high priority whilst packets corresponding to a RAB that has been allocated a low QoS should be transmitted over the air interface at a lower priority." *Id.* at 5:10–14. Peisa explains that "[p]referably, a packet received at the controlling RNC 140 is placed in a queue . . . where the queue corresponds to the priority level attached to the packet as well as to the size of the packet." *Id.* at 5:34–37.

Peisa describes a problem with known priority determination algorithms—namely that "it is possible that flows that have lower priorities are not allowed to transmit for prolonged periods of time. This can result in extremely poor performance if the flow control mechanism of a lower priority flow reacts to this." *Id.* at 8:12–16. To address this drawback, Peisa proposes "maintaining a backlog counter which keeps track of the backlog of unsent data for a given input flow to the MAC entity. The backlog is taken into account when determining an appropriate TFC for that input flow for a subsequent frame." *Id.* at 9:4–8.

An embodiment disclosed by Peisa for allocating bandwidth resources to data flow streams is shown by flowchart 400 in Figure 4, reproduced below.

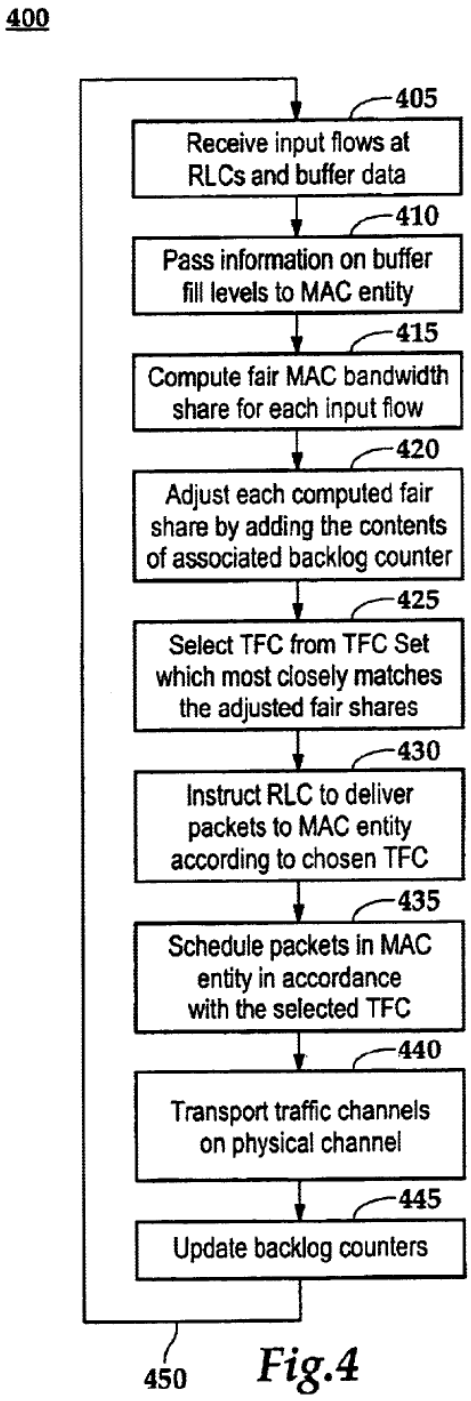

Fig.4

Figure 4 illustrates a "flow diagram of a method of allocating bandwidth resources to, for example, the input flow Streams of a MAC entity." *Id.* at 10:33–35. After receiving input flows and buffering data, step 405, and passing the buffer fill level information to the MAC, step 410, the fair share of MAC bandwidth is determined at step 415. *Id.* at 10:37–42. Peisa explains that "[t]he computed fair share of each is then adjusted by adding the contents of an associated backlog counter to the respective computed fair share (step 420)." *Id.* at 10:42–44. The "fair share" of bandwidth resources is determined by "the weighting given to that flow as a fraction of the sum of the weights given to all the input flows. The fair share may then be determined by multiplying the total output bandwidth by the determined fraction." *Id.* at 9:45–47.

Importantly, considering steps 420–450, Peisa addresses the case where there is a backlog of data packets, that is data in a particular input flow which, due to prioritization inefficiencies, did not get sent in a previous frame. *Id.* at 8:63–9:3. The backlog can occur because the MAC (by selecting an appropriate transport format combination ("TFC" or "TFCS")) determines how much data is transmitted from each flow. Peisa explains that "[s]uch a backlog may exist due to the finite number of data transmission possibilities provided for by the TFCS." *Id.* at 9:28–30. Peisa explains further with respect to steps 420 and 425,

> adding to a backlog counter associated with each input flow the difference between the data transmission rate for the flow resulting from the selected TFC and the determined fair share, if the data transmission rate is less than the determined fair share, where the first processor means is arranged to take into account the value of the backlog counters when selecting a TFC for the subsequent frame of the output data flow.

Id. at 10:5–12. After instructing RLC to deliver packets to MAC and schedule delivery of packets based on TFC at steps 430 and 435, the packets are transported on physical channels at step 440. *Id.* at 10:47–52. Peisa describes that "[o]nce packet traffic has been transported, the backlog counters should be updated (Step 445). The process may continue (via arrow 450) when new input flows are received at the RLCs, which buffer the data (at step 405)." *Id.* at 10:52–56.

2. Independent Claim 1

We consider specifically the elements of limitation 1[g], because it is dispositive as to anticipation of claim 1 by Peisa.

a) Petitioner's Arguments

(1) Preamble – 1[g] wherein in the first iteration, the selection of the data is selected from a subset of the plurality of radio bearers based on the received parameters

(a) Petitioner's Arguments

Petitioner argues that Peisa's Figure 4, and related description, disclose all the elements of limitation of 1[g]. Pet. 47–50. Petitioner argues that Peisa discloses the first iteration at step 415 where "the scheduling algorithm computes a 'fair MAC bandwidth share' for each input flow of data." *Id.* at 47 (citing Ex. 1004, 10:40–42). Although not immediately relevant to limitation 1[g], Petitioner argues that "the second iteration" recited in limitation 1[h] is disclosed by Peisa where "the backlog counters are updated in step 445 of the *first iteration* for use in step 420 of the *second iteration*." *Id.* at 50 (citing Ex. 1004, Fig. 4).

Regarding the first iteration, Petitioner argues that "*Peisa* discloses that this computation of [fair] shares [distribution] is based on the 'weights' for each input flow as defined by the RNC," and that the "weighting for each

input flow is determined using 'RAB parameters,' such as an RAB's Quality of Service." *Id.* at 47 (citing Ex. 1004, 9:40–46; Ex. 1003 ¶ 138). Then, according to Petitioner, "in step 430, the RLC is 'instructed to deliver packets to the MAC entity according to the selected TFC.'" *Id.* at 49 (citing Ex. 1004, 10:47–49).

With respect to selecting data "*from a subset* of the plurality of radio bearers based on the received parameters," Petitioner argues that "for each input flow in the first iteration that transmitted less than its 'determined fair distribution,' the backlog counter will be incremented to reflect that the input flow had buffered data that was not transmitted." *Id.* (citing Ex. 1004 9:19–24). Based on this, Petitioner argues that Peisa discloses that, "in the first iteration of *Peisa*'s scheduling algorithm, 'the selection of data is selected from a subset of the plurality of' RABs (where the non-selected radio bearers will be tracked using a running backlog counter).'" *Id.* Petitioner's declarant, Dr. Akl, testifies, similarly, that "for each input flow in the first iteration that transmitted less than its 'determined fair distribution,' the backlog counter will be incremented to reflect that the input flow had buffered data that was not transmitted." Ex. 1003 ¶ 139.

(b) Patent Owner's Arguments

Patent Owner argues that in the '138 patent, based on the proper claim construction of "subset," "the first iteration is limited to selecting data from some – *but less than all* – of the radio bearers." Prelim. Resp. 14. Given this claim construction, Patent Owner responds to Petitioner's assertions, arguing that Peisa fails to disclose selecting data from a subset, i.e., less than all, of the plurality of radio bearer's, as recited in independent claims 1[g] and 8[f]. *Id.* at 14–16. Patent Owner argues, specifically, that different from the claimed invention, "Peisa's discussion of Fig. 4 discloses a scheduling

algorithm that computes a 'fair MAC bandwidth share' for *each* input flow of data." *Id.* at 15.

Patent Owner argues that Petitioner's assertion that "'the selection of data is selected from a *subset* of the plurality of' RABs (*where the non-selected radio bearers* will be tracked using a running backlog counter)' . . . is not supported by any disclosure in Peisa and literally comes out of nowhere." *Id.* at 16 (quoting Pet. 49–50). According to Patent Owner, "[t]he Petition contains no prior discussion of 'non-selected radio bearers' in Peisa. And more importantly, the Petition fails to explain where Peisa discloses any such 'non-selected radio bearers.'" *Id.*

(c) Analysis

We agree with Patent Owner that there is a dearth of direct, substantive explanation and analysis in the Petition regarding the "subset" limitation. Petitioner did not, in its Petition, raise any claim construction issue with respect to selecting data "*from a subset* of the plurality of radio bearers based on the received parameters." *See* Pet. 3 ("[N]o terms need construction because the claims read on the prior art identified below under any construction consistent with *Phillips*."). Petitioner also does not, in its subsequent application of Peisa to the claim limitation 1[g] of the '138 patent, indicate with particular clarity where Peisa discloses the "subset" limitation. *See* Pet. 11–18; 47–50. We do, however, recognize an argument in the Petition that attempts to address this limitation.

In the Petition, Petitioner concludes that Peisa's data is selected from "a subset" of a plurality of RABs, and that "non-selected radio bearers will be tracked using a running backlog counter," apparently, because there are "input flow[s] in [Peisa's] first iteration that transmitted less than its 'determined fair distribution.'" Pet. 49. In other words, Petitioner argues

that in Peisa's first iteration some data in certain input flows is not transmitted based on selected TFC parameters, but the other input flows that *do* transmit all their data, are "a subset of a plurality of radio bearers" as recited in claim. 1. *Id.* In support of this argument Dr. Akl testifies that "for each input flow in the first iteration that transmitted less than its 'determined fair distribution,' the backlog counter will be incremented to reflect that the input flow had buffered data that was not transmitted." Ex. 1003 ¶ 140.

This argument and Dr. Akl's testimony is problematic because it does not explain technically, or logically, why input flows that transmit less than "a determined fair distribution" are "non-selected." Neither the arguments in the Petition, nor Dr. Akl's testimony, fully address this particular jump in logic. Even if the input flow transmits less than its fair distribution of bandwidth, (and a backlog counter is incremented to reflect that the input flow has buffered data that was not transmitted), this does not explain that a particular radio bearer is excluded from being allocated bandwidth resources such that it is "non-selected," i.e., that resources are applied only to less than all of the radio bearers. The Petition even tacitly acknowledges that each input flow in Peisa transmits data, explaining that "[w]hen the scheduling algorithm *does* reach step 445 in the first iteration, it will 'update' the 'backlog counters' for each input flow that did not get to transmit all of its data during the first iteration." *Id.* at 49 (citing Ex. 1004, 9:1–34).

Peisa describes that using a backlog counter to account for unsent data can alleviate the problem where, for example "the actual amount of data sent for an input stream in a given frame either may fall below the optimized rate or may exceed that optimized rate. In the former case, a backlog of unsent data may build up for the input flow." Ex. 1004, 8:63–67. Peisa explains that an important part of its invention is "maintaining a backlog counter

which keeps track of the backlog of unsent data for a given input flow to the MAC entity. The backlog is taken into account when determining an appropriate TFC for that input flow for a subsequent frame." *Id.* at 9:4–8. This does not, based on a fair reading of Peisa, describe that any of the input flows are "non-selected." In fact, Peisa consistently describes applying its bandwidth optimization process and method to "each" input flow. *See, e.g.*, *id.* at 10:40–64 (Peisa explaining that [a]fter the information on buffer fill levels is passed, the fair MAC bandwidth share for *each* input flow is computed (step 415). The computed fair share of *each* is then adjusted by adding the contents of an associated backlog counter to the respective computed fair share (step 420) . . . and by keeping track of how far behind *each* flow is from the optimal bandwidth allocation using respective backlog counters.") (emphasis added).

We find Patent Owner's position here persuasive and consistent with a reasonable reading of Peisa—that is, "Peisa's discussion of Fig. 4 discloses a scheduling algorithm that computes a 'fair MAC bandwidth share' for *each* input flow of data, after which the contents of a backlog counter are *added* 'to the respective computed fair share.'" Prelim. Resp. 15 (citing Pet. 48). Also, we credit Patent Owner's declarant, Dr. Lomp, who testifies persuasively that

> [t]he aspects of Peisa mapped to the claimed "first iteration" (Peisa, Steps 415-445; Pet., 47-50) fail to meet the requirement that data be selected from a subset of radio bearers, because step 415 of Peisa allocates a fair share to every radio bearer and then adds the contents of a backlog counter thereto. Peisa contains no disclosure that steps 415-445 are applied to only a *subset* (*i.e.*, less than all) of the radio bearers, as required by the Challenged Claims.

Ex. 2001 ¶ 52.

In its Reply to Patent Owner's Preliminary Response, Petitioner argues that "[e]ven under Patent Owner's improper narrow construction, *Peisa* teaches selecting data for transmission in 'first iteration' from less than all of a UE's radio bearers (or transport channels), for two reasons." Reply 3. Because these arguments pertain to the proper claim construction as we determined in Section II.C., we address both arguments in turn.

Petitioner first argues in its Reply that "*Peisa* discloses transport formats (TF) in which a transport channel is allocated 0 packets. *See id.* at 7:37–8:2 (identifying transport formats such as (80, 0), and discussing an example in which 'nothing is transmitted from the first transport channel'). Thus, according to Petitioner, *Peisa* discloses that in the first iteration data can be selected for transmission from less than all of a UE's radio bearers." Reply 3.

This argument is not persuasive because the claim requires the processor to "select data from the plurality of radio bearers" and "transmit a signal including the selected data." Ex. 1001, 14:5–16. Patent Owner responds in its Sur-Reply that Petitioner's argument improperly interprets "the data" recited in claim 1 to include "no data." *See* Sur-Reply 3 (Patent Owner arguing that "[t]he Reply posits that these limitations would be met in a scenario where no data is transmitted by Piesa."). We agree with Patent Owner's position here. Petitioner has not pointed to any evidence in the '138 patent that the selection of data from the plurality of radio bearers, encompasses "no data" transported in certain input flows. Ex. 1001, 14:5–8. Particularly, where, on its face, claim 1 requires the processor to "select data . . . for transmission." *Id.* at 14:5–6. Petitioner has not sufficiently explained how, or why, a processor would be configured to "cause the

transmitter to transmit a signal including the selected data," as required by claim 1, where there is no data to transmit.

Petitioner next argues that

> *Peisa*'s use of a backlog counter further confirms that, in a first iteration, rather than select any data for transmission from a transport channel, *Peisa* can instead update its backlog counter, and use the backlog counter in a subsequent iteration to select a transport format combination (TFC) to later allocate resources to the transport channel.

Reply 3–4 (citing Ex. 1004, 10:29–54). In other words, Petitioner argues that Peisa's process in a first iteration can essentially choose *not* to select data for transmission from a transport channel, thereby selecting data from "less than all of the radio bearers." *Id.* at 4.

This argument is not persuasive for similar reasons as discussed above with respect to Peisa's teaching to provide each input flow with a "fair share" of the available bandwidth. What Peisa actually discloses is that in a first iteration after input flows are received and the data is buffered at step 405 "the fair MAC bandwidth share for *each* input flow is computed (step 415)." Ex. 1004, 10:40–42. Then, in a subsequent iteration "[t]he computed fair share of *each* is then adjusted by adding the contents of an associated backlog counter to the respective computed fair share (step 420)." *Id.* at 10:42–44.

Even considering the arguments in Petitioner's Reply, Petitioner has failed to provide sufficient evidence or point to persuasive disclosure in Peisa that the asserted first iteration in Peisa's process, described in Figure 4 at steps 415–445, are applied to "a subset of the plurality of radio bearers based on the received parameters," as required by independent claim 1.

3. Independent Claim 8

We next consider limitation 8[h], because it corresponds exactly to limitation 1[g] discussed above, and is dispositive as to anticipation of independent claim 8 by Peisa.

> *Limitation 8[h] – wherein in the first iteration, the selection of the data is selected from a subset of the plurality of radio bearers based on the received parameters;*

Petitioner argues limitation 8[h] in conjunction with, and based on the same evidence including Peisa and Dr. Akl's testimony, as discussed above with respect to limitation 1[g]. *See* Pet. 47–50 (arguing that Peisa anticipates the elements of limitations 1[g]/8[h] for the same reasons). For the same reasons as discussed above with respect to limitation 1[g], we are not persuaded that Petitioner has shown a reasonable likelihood that Peisa anticipates independent claim 8.

4. Dependent claims 2–4, 6–7, 11, 13, and 14.

Claims 2–4, 6, and 7 each depend directly from independent claim 1, and claims 11, 13, and 14 each depend directly from independent claim 8 and are thus also not anticipated by Peisa. Ex. 1001, 14:17–32, 14:63–15:6.

5. Conclusion as to claims 1–4, 6–11, 13, and 14

We have considered and do not find persuasive Petitioner's arguments and supporting evidence that claims 1–4, 6–11, 13, and 14 are anticipated by Peisa. Accordingly, we determine that Petitioner has not shown a reasonable likelihood that Peisa anticipates claims 1–4, 6–11, 13, and 14.

E. Ground 2: Claims 1–4, 6–11, 13, and 14 – Alleged Obviousness over Peisa (Ex. 1004)

On this record, Petitioner has not established a reasonable likelihood of prevailing on its assertion that at least one of claims 1–4, 6–11, 13, and 14 would have been obvious over Peisa for the reasons explained below.

Petitioner argues that to the extent "*Peisa* does not disclose a 'processor' configured to perform the claimed functions, it would have been obvious to a person of ordinary skill in the art to implement *Peisa's* MAC scheduler using a processor configured to perform the functions." Pet. 61 (citing Ex. 1002 ¶ 170). Petitioner argues specifically that a person of ordinary skill in the art would have understood that "[i]mplementing *Peisa's* MAC scheduler on a processor configured to perform such functions would merely be a matter of using a well-known technique (using a processor configured to execute wireless protocols) to improve a similar device in the same way (by making Peisa's UE easily reprogrammable using software)." *Id.* at 62 (citing *KSR*, 550 U.S. at 416).

Apart from "a processor," Petitioner does not discuss or analyze any additional limitations, including limitations 1[g] and 8[h], with respect to obviousness. *See* Pet. 63 ("Thus, the "processor" and 'processor configured to . . .' limitations of claims 1 and 8 would have at least been obvious based on *Peisa*."). Petitioner relies on its evidence and arguments with respect to ground 1 for the remainder of the obviousness ground. *See id.* (The Petitioner states "given the above-discussed disclosures of *Peisa* in Ground 1 for the other limitations of claims 1–4, 6–11 and 13–14, *Peisa* would have at least rendered obvious claims 1–4, 6–11 and 13–14) (citing Ex. 1003 ¶¶ 169–73). Petitioner's obviousness ground based on Peisa, thus does not provide persuasive evidence or arguments that a person of ordinary skill in

the art would have understood Peisa to disclose the limitations in limitations 1[g] and 8[h].

Accordingly, based on the arguments and evidence of parties on the record before us, we determine that Petitioner has not established a reasonable likelihood of showing any of the challenged claims as obvious over Peisa.

F. Ground 3: Claims 1–4, 6–11, 13, and 14 – Alleged Obviousness over Peisa and Heo (Ex. 1029)

On this record, Petitioner has not established a reasonable likelihood of prevailing on its assertion that at least one of claims 1–4, 6–11, 13, and 14 would have been obvious over Peisa and Heo for the reasons explained below.

Petitioner argues that "persons of ordinary skill would have understood that *Peisa* discloses that the UE's processor is configured to transmit a message including its plurality of buffer occupancies to a network, or would have at least found this obvious." Pet. 64. Petitioner addresses, specifically in this regard, claim limitations 1[c]–[d] and 8[b]–[c]

> Limitation 1[c]: determine a plurality of buffer occupancies, wherein each of the plurality of buffer occupancies is associated with one or more radio bearers of the plurality of radio bearers,
>
> Limitation 1[d]: cause the transmitter to transmit a message including the plurality of buffer occupancies to a network,

Ex. 1001, 13:64–14:2.

Petitioner argues that "*Peisa* teaches that a UE 'passes' its buffer fill levels to its MAC entity on each iteration and that its MAC entity, in turn, transmits messages and data to the network." Pet. 63 (citing Ex. 1004, 1:64–2:2; 4:20–47, Ex. 1003 ¶ 175). Petitioner argues that "[t]o the extent it is argued that *Peisa* does not disclose the *literal message itself* that the UE's

MAC entity transmits to the network including those buffer occupancies, other references make plain this feature of UMTS . . . *Heo* is one such reference." Pet. 64 (citing Ex. 1004, 1:64–2:2). According to Petitioner, Heo describes with respect to Figure 3,

> that "[i]n order to request a scheduling assignment from the Node B, the MAC-eu layer 500 transmits scheduling information, which contain a *buffer status representing the amount of the data stored in the priority queues 504* and a channel status representing the transmission quality of an uplink, through an EUDCH related uplink 510."

Id. at 66 (quoting *Heo* ¶ 53). Petitioner concludes that, "[a]ccordingly, *Peisa* and *Heo* render obvious claim limitations claim 1[d] and 8[c] obvious." *Id.* at 69 (citing Ex. 1003 ¶¶ 167–184).

Apart from limitations 1[d] and 8[c], Petitioner does not discuss or analyze any additional limitations, including limitations 1[g] and 8[h], with respect to obviousness over Peisa and Heo. *See* Pet. 69 ("*Peisa* discloses the remaining claim limitations of Claims 1 and 8 and dependent claims 2–4, 6–7, 9–11 and 13–14 for the same reasons discussed in Ground 1 with respect to those limitations.") (citing Ex. 1003 ¶¶ 181–184). Petitioner's obviousness ground based on Peisa and Heo thus does not provide persuasive evidence or arguments that a person of ordinary skill in the art would have understood Peisa, either alone or as combined with Heo, to disclose at least the elements in limitations 1[g] and 8[h].

Accordingly, based on the arguments and evidence of parties on the record before us, we determine that Petitioner has not established a reasonable likelihood of showing any of the challenged claims as obvious over Peisa and Heo.

G. Ground 4: Dependent Claims 5 and 12 – Alleged Obviousness over Peisa and TS 24.008 (Ex. 1005)

Claims 5 and 12 each depend directly from independent claims 1 and 8 respectively. Ex. 1001, 14:24–26, 65–67. Petitioner's obviousness ground based on Peisa and TS 24.008 does not provide persuasive evidence or arguments that a person of ordinary skill in the art would have understood Peisa, either alone or as combined with TS 24.008, to disclose at least the elements in limitations 1[g] and 8[h] for the same reasons as discussed for ground 1.

Accordingly, for the same reasons as discussed above relative to independent claims 1 and 8 in view of Peisa, we are not persuaded that the Petition supports a reasonable likelihood that claims 5 and 12 would have been unpatentable as obvious over Peisa and TS 24.008.

III. CONCLUSION

For the above reasons, we decline to institute *inter partes* review of any of the challenged claims of the '138 patent.

IV. ORDER

Accordingly, it is:

ORDERED that the Petition is denied.

For PETITIONER:

David Reese
James Barney
Joshua Goldberg
Gracie Mills
FINNEGAN HENDERSON FARABOW GARRETT & DUNNER LLP
david.reese@finnegan.com
james.barney@finnegan.com
joshua.goldberg@finnegan.com
gracie.mills@finnegan.com

For PATENT OWNER:

Ryan O'Donnell
Jeffrey Glabicki
Dawn Kerner
Michael Snyder
Russell Rigby
Daniel Golub
Robert Leonard
VOLPE KOENIG
rodonnell@vklaw.com
jglabicki@vklaw.com
dkerner@vklaw.com
msnyder@vklaw.com
rrigby@vklaw.com
dgolub@vklaw.com
rleonard@vklaw.com