US005878231A

United States Patent [19]

Baehr et al.

[11] **Patent Number: 5,878,231**

[45] **Date of Patent: Mar. 2, 1999**

[54] **SYSTEM FOR PACKET FILTERING OF DATA PACKETS AT A COMPUTER NETWORK INTERFACE**

[75] Inventors: **Geoffrey G. Baehr**, Palo Alto; **William Danielson**, Mountain View; **Thomas L. Lyon**, Palo Alto, all of Calif.; **Geoffrey Mulligan**, Colorado Springs, Colo.; **Martin Patterson**, Grenoble, France; **Glenn C. Scott**, Mountain View; **Carolyn Turbyfill**, Los Gatos, both of Calif.

[73] Assignee: **Sun Microsystems, Inc.**, Palo Alto, Calif.

[21] Appl. No.: **795,374**

[22] Filed: **Feb. 4, 1997**

Related U.S. Application Data

[62] Division of Ser. No. 444,351, May 18, 1995, Pat. No. 5,802,320.

[51] **Int. Cl.**[6] **G06F 13/38**; G06F 15/17

[52] **U.S. Cl.** **395/200.75**; 395/200.73

[58] **Field of Search** 370/401, 403; 395/200.7, 200.8, 200.71, 200.73, 200.75

[56] **References Cited**

U.S. PATENT DOCUMENTS

4,577,313	3/1986	Sy	371/403
5,550,984	8/1996	Gelb	395/200.75
5,559,883	9/1996	Williams	380/4
5,590,285	12/1996	Krause et al.	395/200.48
5,606,668	2/1997	Shwed	395/187.01
5,623,601	4/1997	Vu	395/187.01

OTHER PUBLICATIONS

"Firewalls and Internet Security," by Cheswick & Bellovin, Addison Wesley, 1994.

"Firewall Routers and Packet Filtering," by Gary Kessler, Feb. 1995.

Ip–masq.c from Linux kernel (v.2.0.27), 1994.

Ip–fw.c from Linux kernel (v 2.0.27), 1994.

Primary Examiner—David L. Robertson

Attorney, Agent, or Firm—Finnegan, Henderson, Farabow, Garrett & Dunner, L.L.P.

[57] **ABSTRACT**

A system for screening data packets transmitted between a network to be protected, such as a private network, and another network, such as a public network. The system includes a dedicated computer with multiple (specifically, three) types of network ports: one connected to each of the private and public networks, and one connected to a proxy network that contains a predetermined number of the hosts and services, some of which may mirror a subset of those found on the private network. The proxy network is isolated from the private network, so it cannot be used as a jumping off point for intruders. Packets received at the screen (either into or out of a host in the private network) are filtered based upon their contents, state information and other criteria, including their source and destination, and actions are taken by the screen depending upon the determination of the filtering phase. The packets may be allowed through, with or without alteration of their data, IP (internet protocol) address, etc., or they may be dropped, with or without an error message generated to the sender of the packet. Packets may be sent with or without alteration to a host on the proxy network that performs some or all of the functions of the intended destination host as specified by a given packet. The passing through of packets without the addition of any network address pertaining to the screening system allows the screening system to function without being identifiable by such an address, and therefore it is more difficult to target as an IP entity, e.g. by intruders.

12 Claims, 7 Drawing Sheets

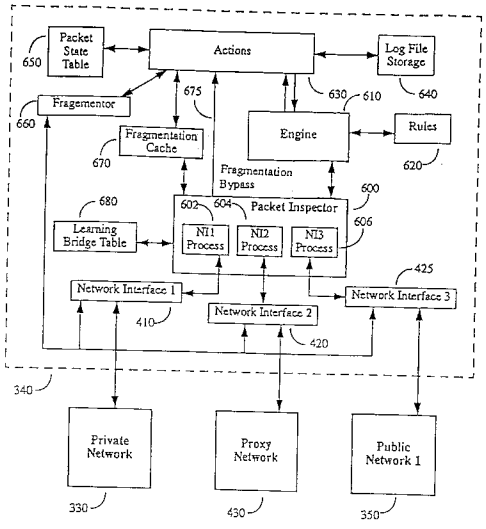

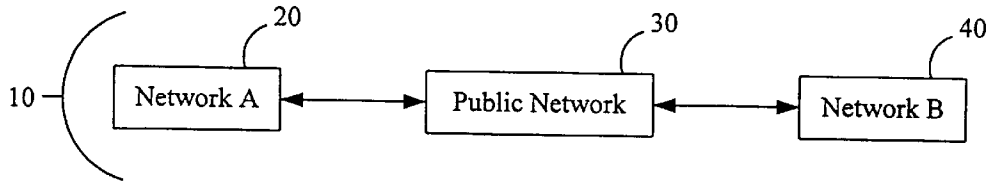

Figure 1 -- *Prior Art*

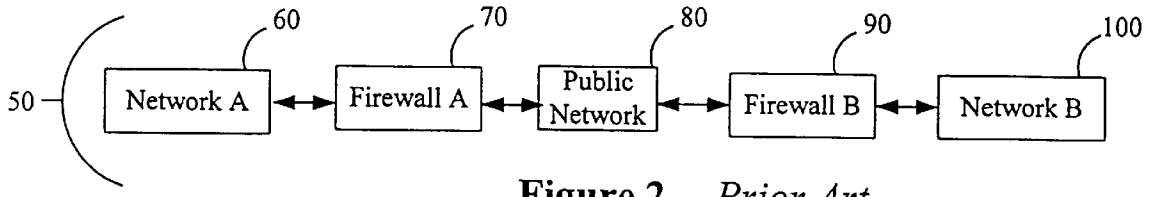

Figure 2 -- *Prior Art*

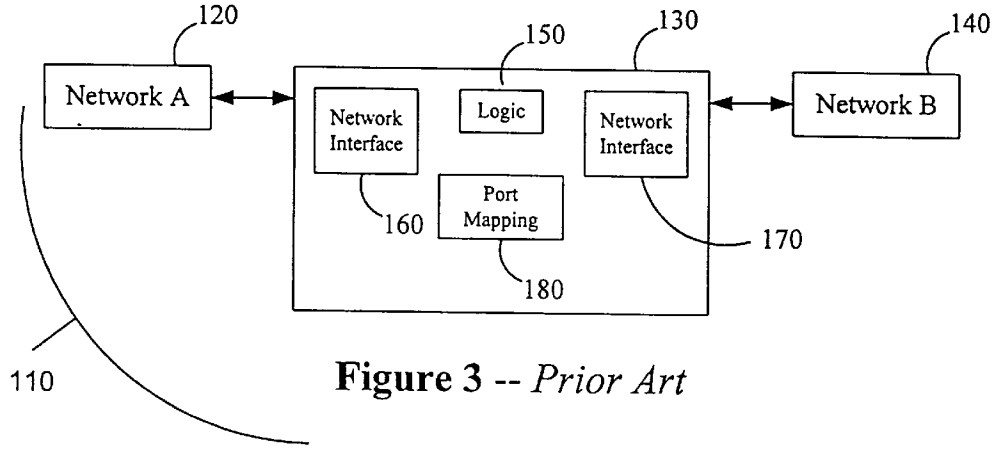

Figure 3 -- *Prior Art*

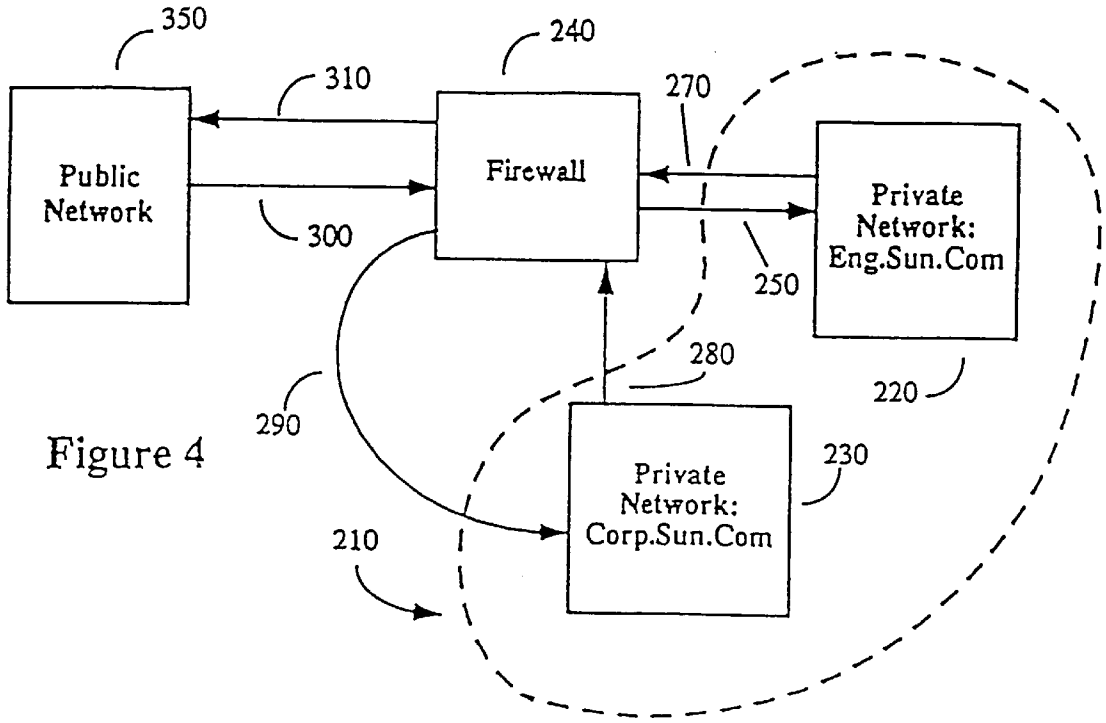

Figure 4

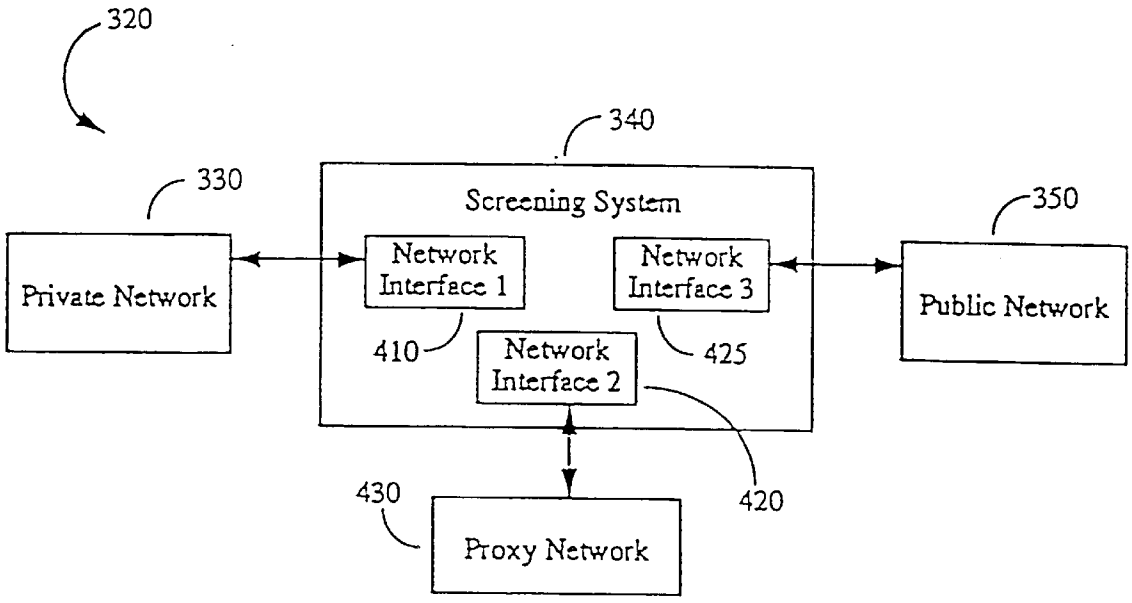

Figure 5

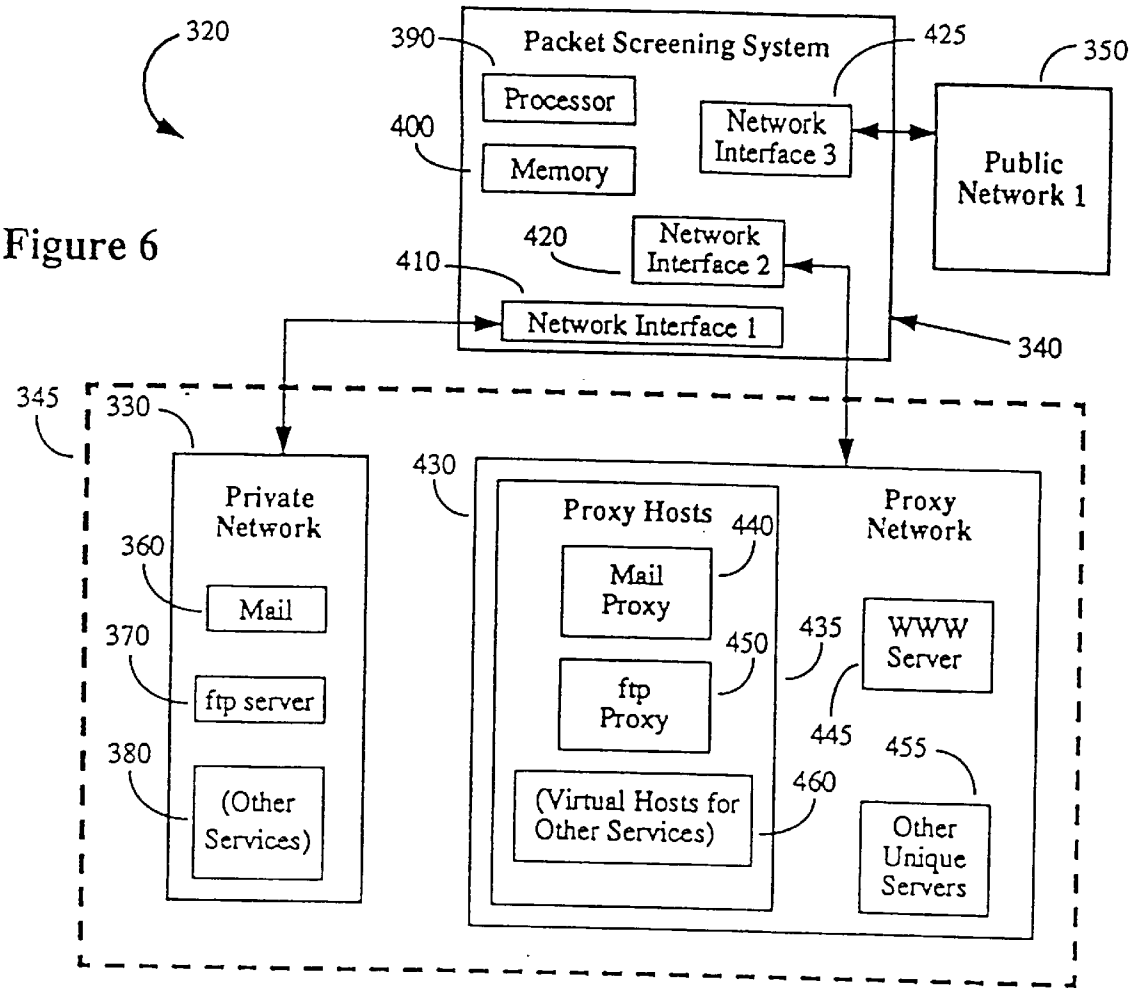

Figure 6

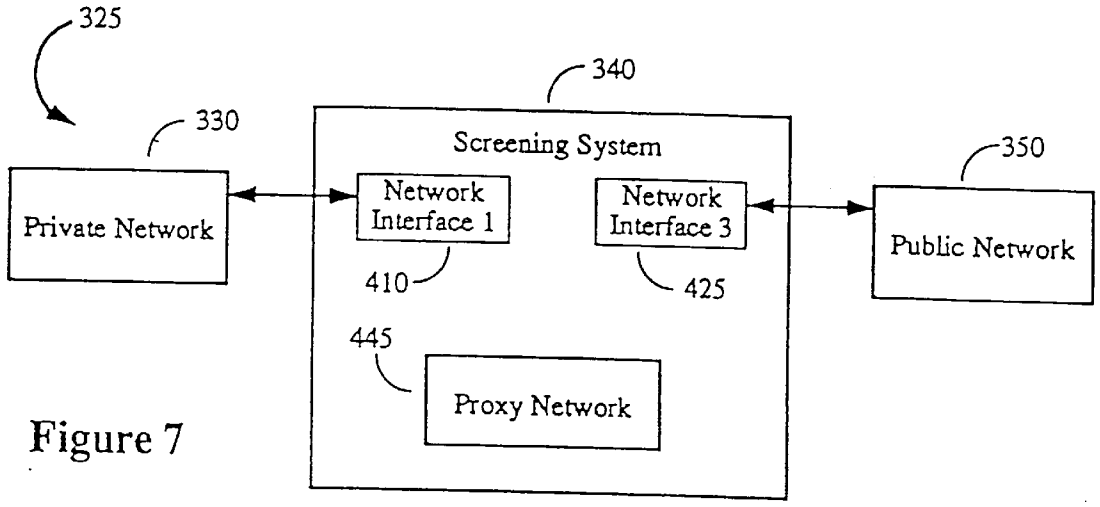

Figure 7

Figure 8

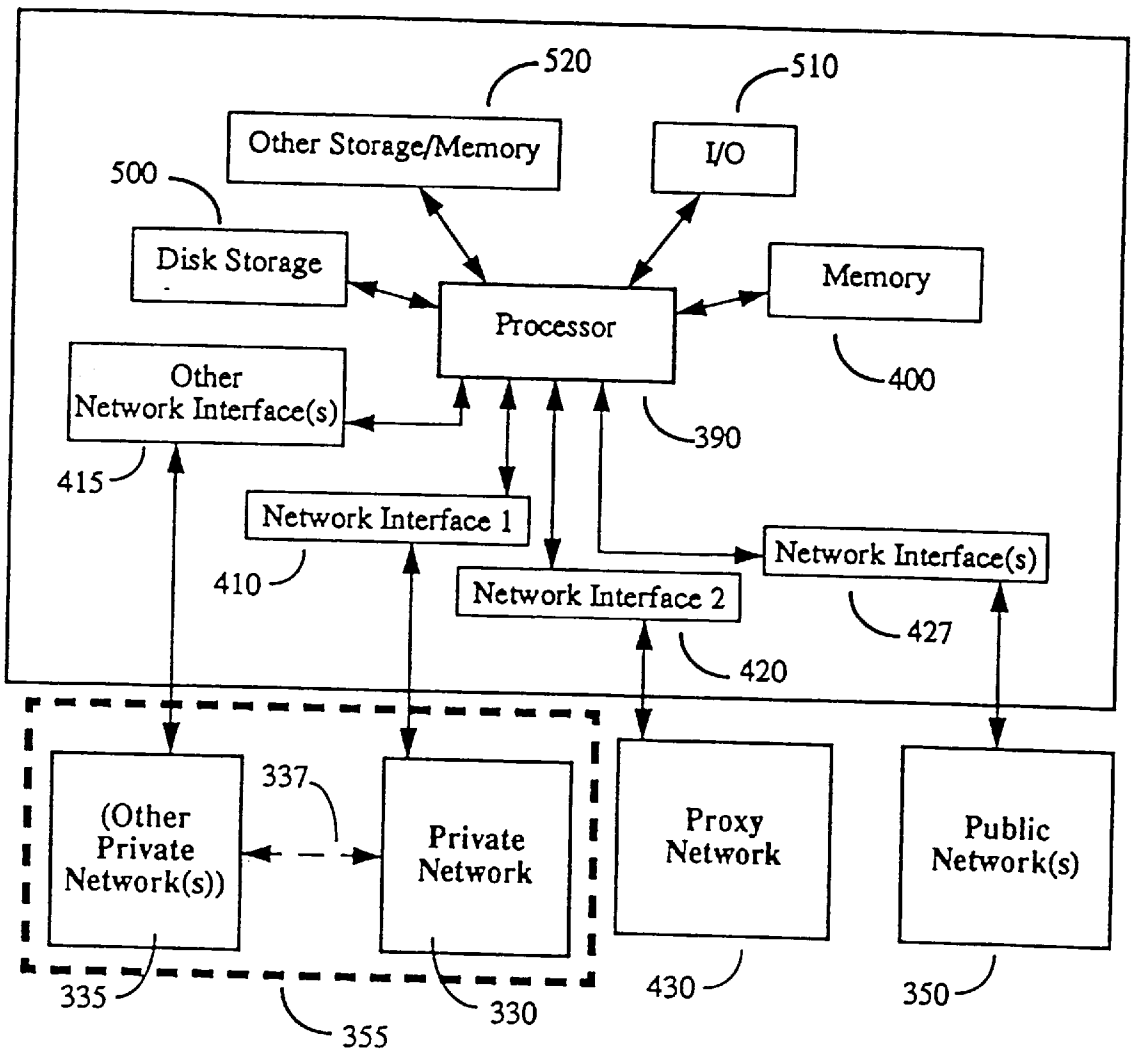

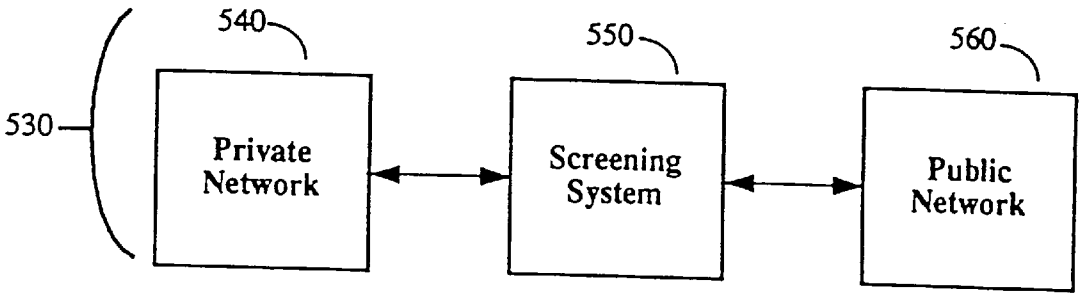

Figure 8A

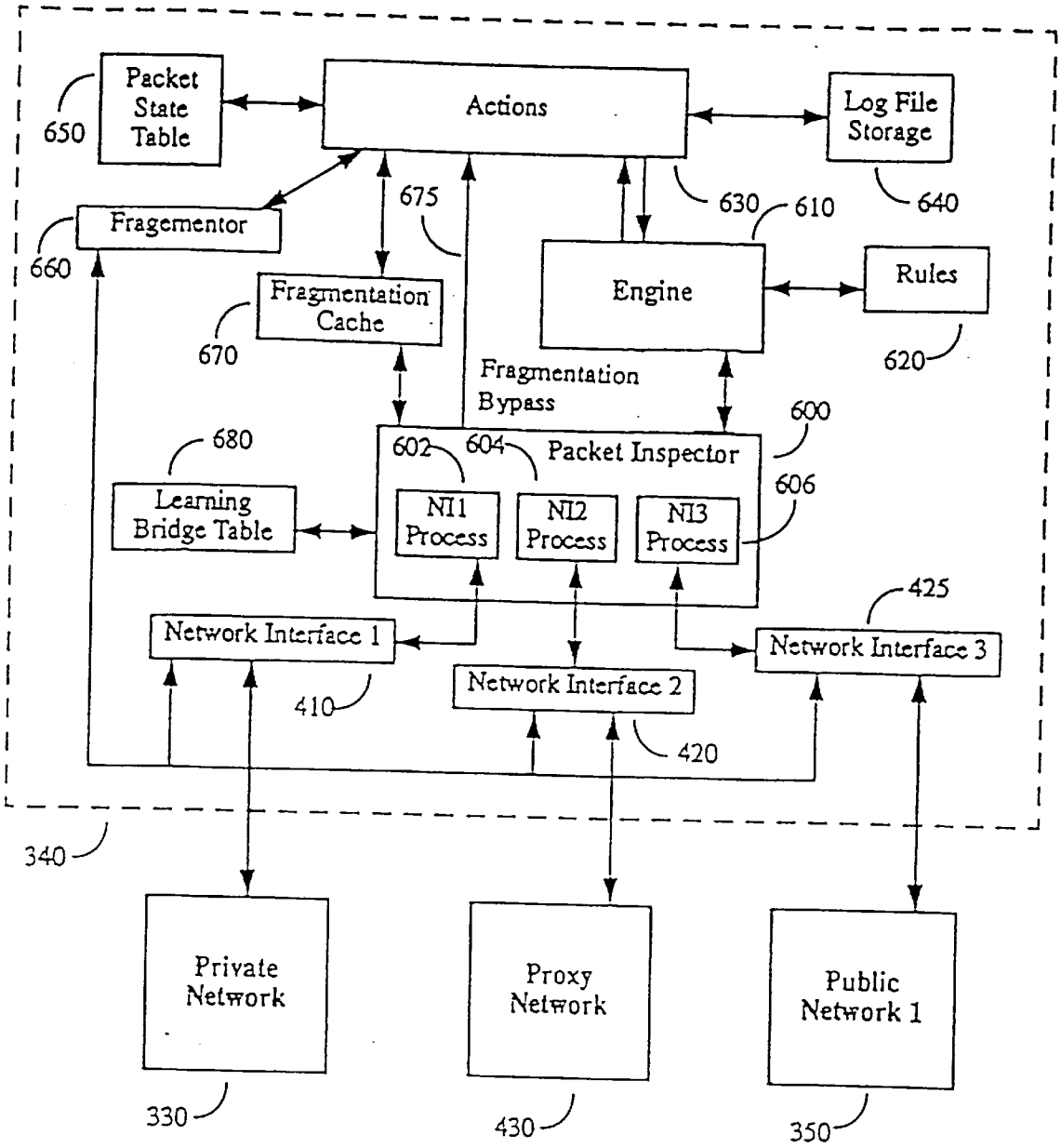
Packet State Table
650
Actions
Log File Storage
640
630
610
675
Fragementor
660
Fragmentation Cache
670
Engine
Rules
620
Fragmentation Bypass
600
680
602
604
Packet Inspector
606
Learning Bridge Table
NI1 Process
NI2 Process
NI3 Process
425
Network Interface 1
Network Interface 3
Network Interface 2
410
420
340
Private Network
Proxy Network
Public Network 1
330
430
350

Figure 9

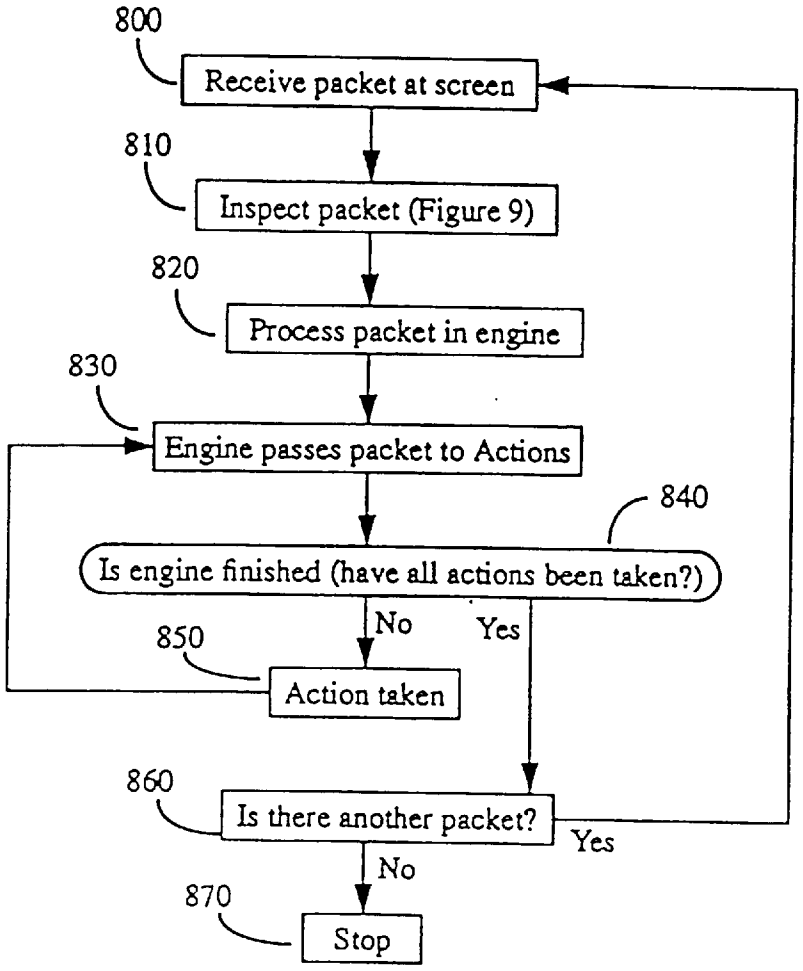
800
Receive packet at screen
810
Inspect packet (Figure 9)
820
Process packet in engine
830
Engine passes packet to Actions
840
Is engine finished (have all actions been taken?)
No
Yes
850
Action taken
860
Is there another packet?
Yes
No
870
Stop

Figure 10

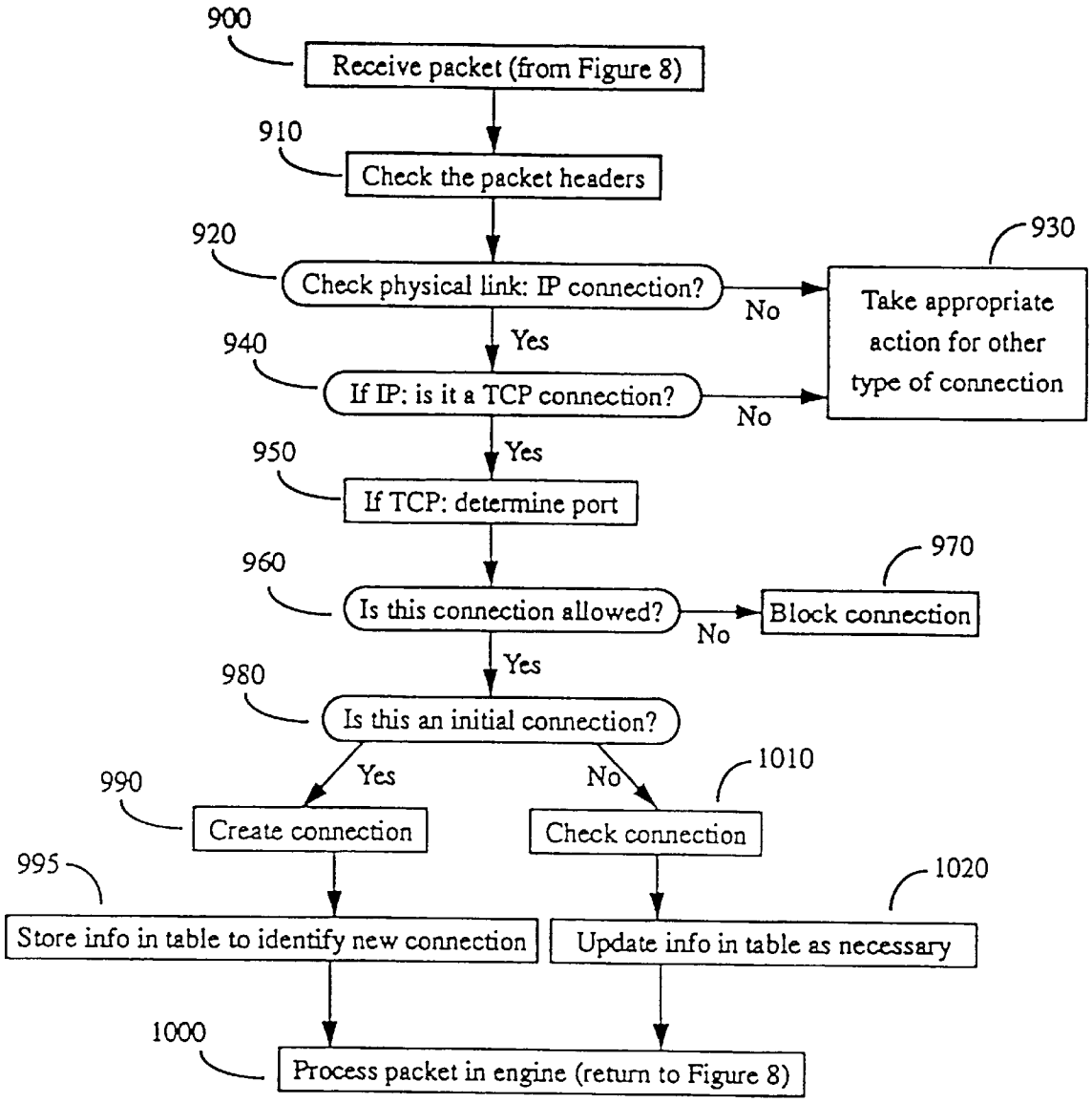
900
Receive packet (from Figure 8)
910
Check the packet headers
920
Check physical link: IP connection?
No
930
Take appropriate action for other type of connection
Yes
940
If IP: is it a TCP connection?
No
950
Yes
If TCP: determine port
960
Is this connection allowed?
No
970
Block connection
Yes
980
Is this an initial connection?
Yes
No
990
Create connection
1010
Check connection
995
Store info in table to identify new connection
1020
Update info in table as necessary
1000
Process packet in engine (return to Figure 8)

Figure 11

SYSTEM FOR PACKET FILTERING OF DATA PACKETS AT A COMPUTER NETWORK INTERFACE

This application is a divisional application of U.S. patent application Ser. No. 08/444,351, filed May 18, 1995 now U.S. Pat. No. 5,802,320.

BACKGROUND OF THE INVENTION

The present invention relates to screening of data packets sent from one computer network to another. There are numerous ways for a user on a public network to interact with a host machine on a private network, such as in a telnet session, an ftp (file transfer protocol) session, by email (electronic mail), and so on. In addition, computers on a given target network may be requested to carry out certain operations by users outside the network, besides directly connecting the requester's machine.

A conventional internet work **10** is shown in FIG. **1**, including a private network **20**, a public network **30**, and another private network **40**. If the private networks **20** and **40** are not provided with firewalls, they are quite vulnerable to intruders.

FIG. **3** shows an internet work **110** where a private network **120** can communicate with another private network **140** via a router or bridge **120**, which is controlled by logic (such as a circuit, or typically a processor with associated memory) **150** which controls network interfaces **160** and **170**. When a data packet arrives from network **140** addressed to a host and specifying a port on network **120**, it is mapped to that host and port by unit **180**, and transmitted via interface **160** to the appropriate destination on the network **120**. FIG. **3** is also not provided with any security, and hence is available for targeting.

Computer firewalls have therefore been developed, as in the system **50** shown in FIG. **2**, where private networks **60** and **100** can communicate with one another via public network **80**, but are provided with firewalls **70** and **90**, respectively. A problem with conventional computer firewalls (and routers or bridges such as bridge **130** in FIG. **3**) in use today is that they participate in IP (Internet Protocol) transactions, and in doing so generate information identifying them as IP machines, which makes them visible for targeting by intruders. For a detailed discussion of this and other types of problems with firewalls, see, e.g. the reference *Firewalls and Internet Security* by Cheswick & Bellovin (Addison Wesley 1994), and *Internet Firewalls and Network Security* by Siyan & Hare (New Riders Publishing 1995), which are incorporated herein by reference.

A firewall and packet filtering system should ideally be invisible to intruders so as to help minimize the number of ways in which it can be targeted, while nonetheless filling functions that are appropriate.

Current network security solutions often involve modifications to the networks in addition to the provision of firewalls, which can be complicated and expensive. A system is needed that can be connected to a network substantially without altering it, but providing security against breaches from outside the protected network.

Packet filtering systems are used today to provide security for networks, but conventionally act as routers, having one port or network interface coupled to the protected network and another port to another network or the Internet. As routers, such systems are responsive to IP commands, and in particular may respond to data packets by using their IP addresses. This allows intruders to target them for characterization and attack.

The same type of targeting may be accomplished when addresses within a protected network are known to users outside the network. It would therefore by advantageous to provide a system that can respond to data packets from outside a network without revealing IP address information about either the filtering system or about hosts within the network.

SUMMARY OF THE INVENTION

The present invention is directed to a screening system that acts as both a firewall in the conventional sense and a signatureless packet filtering system. A screen is positioned on the network connection between, for example, a public network and a private network that is to be protected from targeting for attack. A port or network interface is provided for each of the two networks, and one or more additional ports are provided to one or more proxy networks.

The screening system includes a packet filtering subsystem or module, which inspects each incoming packet and sends it to an engine, which determines, based upon the packet inspector and other information, what actions should be taken on the packet. The packet is passed to an actions subsystem or module, which executes the appropriate actions.

If the packet's intended destination is a host machine on the private network, it may instead be sent aside to a preconfigured host machine on the proxy network, which executes appropriate operations that the actual host would execute, or different operations as desired. The proxy host generates responses using the IP address of the actual host, so the existence of the proxy network is not detectable. The screening system is not a router and hence does not have its own IP address, so it too cannot be detected in this manner, and is not subject to such operations as trace_route, ping, finger, and so on.

The screening system requires no modification to the private or public networks; instead, it can be connected in-line on the network connection, a proxy network can be set up with as many hosts as desired, and security is thereby provided without reconfiguring the private network or altering the network software.

The screening system can be preconfigured to carry out a wide range of other actions on the packets, all subject to predetermined criteria, such as dropping them with or without an error message, logging them, altering them or their headers, and so on. Each of these and other actions can be carried out while maintaining the anonymity of the screening system.

BRIEF DESCRIPTION OF THE DRAWINGS

FIG. **1** is a block diagram of a system connecting two computer networks via a public network.

FIG. **2** is a block diagram of a system connecting two computer networks via a public network, using intervening firewalls.

FIG. **3** shows a conventional system including a bridge between two computer networks.

FIG. **4** is a block diagram of an exemplary connection from a private network and a public network to another private network, via firewalls.

FIG. **5** is a block diagram of computer internet work including a packet screening system according to the invention.

FIG. **6** is a functional block diagram of a packet screening system of the invention on an internetwork.

FIG. **7** is a block diagram of an alternative embodiment of the packet screening system of the invention.

FIG. **8** is a block diagram of hardware for implementing the invention.

FIG. **8**A is a diagram of another embodiment of the invention.

FIG. **9** is functional block diagram of the invention.

FIGS. **10–11** are flow charts of the method of packet screening according to a preferred embodiment of the invention.

DESCRIPTION OF THE PREFERRED EMBODIMENTS

The Hardware of the Invention

FIG. **4** shows an internetwork system appropriate for implementation of the present invention. A public network **200** (or network of networks, such as the Internet) can communicate with a private network or internetwork **210**, which includes by way of example an engineering domain network **220** and a corporate domain network **230**. A conventional firewall **240** is positioned as shown between the network **220** and the networks **230** and **200**. Note that the firewall may, as illustrated, be positioned between a given private network (**220**) and a public network (**200**), and also between the private network **200** and other networks (such as **210**) which on its own private internetwork. The networking hardware and software can be any suitable conventional networking system, such as Ethernet.

Firewall **240** may be configured as a single machine or as separate machines, one handling the incoming data packets and the other handling the outgoing data packets from network **220**, as desired by the implementer. In addition, another firewall specifically for the corporate domain network **230** would normally be used, but is not illustrated in this figure.

Any data packets transmitted from either of the networks **200** or **230** travel via connections **300** or **280** to the firewall **240**, which may be conventional except in the respects noted below. Firewall **240** passes allowed data packets via connection **250** to the network **220**.

Likewise, data packets from network **220** addressed to destinations within network **200** or network **230** are transmitted over connection **270** to the firewall **240**, which passes packets as requested, subject to its security provisions, via connection **310** (if to network **200**) or connection **290** (if to network **230**). Connections **250** and **270–310** may all be conventional network connections, for example cables, fiber optics, or the like.

FIG. **5** is a logical block diagram of a packet screening system **340** of the invention that can be implemented in an internetwork system **320**—which may alternatively be an internetwork such as that shown in FIG. **4**; thus, firewall **240** may be replaced by the screening system **340**, which is configured to handle all of the conventional firewall functions plus the screening functions described below.

In FIG. **5**, a single private network **330** is shown coupled via a standard network interface **410** to the packet screening system (or simply "screen") **340**. In addition, public network **350** is coupled to the screen **340** via another standard network interface **425**. A third network, proxy network **430**, is coupled to the screen **340** via network interface **420**.

Using firewall connections such as those in FIGS. **4** and **5**, any number N of private networks (which in this case may be considered to include the proxy network) may be coupled via multiple screens **340** of the invention to one another and to any desired number M of public networks. Thus, an N×M screening system may be formed; in the example of FIG. **5**, N=2 and M=1. See also the discussion below of FIG. **8**.

It is equally possible to build a system of the invention without the proxy network, where N=M=1, and where data packets would be passed through without alteration of the IP address in one or both directions, or with some alteration but without adding any IP or other network address of the screening system itself. Such a system is described below in connection with FIG. **8**A.

FIG. **6** shows greater detail of the screen **340**, which may be a uni- or multiprocessorbased system; in this embodiment, a single processor **390** is shown, coupled to one or more conventional memories (for example, RAM, ROM, EPROM, disk storage, etc.) **400**, which store(s) the instructions necessary to execute the operations carried out by the invention. The network interfaces **410–425** are controlled by the processor **390** in conventional fashion.

The private network will typically include many different hosts: examples are a mail host **360**; an ftp (file transfer protocol) host **370** for governing ftp connections; and other hosts **380** for other services, such as a WWW (World-Wide Web) server, hosts for rlogin (remote login) and rshell, and so on.

The proxy network **430** includes proxy (or virtual) hosts **435**, which preferably are separate computer systems. In the preferred embodiment, the proxy network **430** includes a virtual host mirroring (or acting as proxy for) each of a subset (or all) of the hosts found on the private network **330**, in a manner to be described below.

Such virtual hosts in the embodiment shown include a proxy mail server **440**, a proxy ftp server **450**, and other virtual hosts **460**, with a virtual (proxy) host for each actual host desired to be duplicated which may include some or all of the actual hosts. The proxy hosts are "virtual" in the sense that they are not the actual targeted hosts **360–380**, but rather mimic the behavior of the those hosts; but they do represent actual hardware and/or software in the proxy network.

Hosts may also be included that are unique to the proxy network. For instance, the proxy network **430** may include a WWW server **445** which is unique to the proxy server, i.e. is not merely a mirror or proxy for a WWW server within the network **330**. In this case, when a user from network **350** requests a connection to http://www.<private.network>.com, he/she will be connected to WWW server **445**. Other servers **455** unique to the proxy network **430** may also be provided.

A proxy network may thus include proxy hosts representing actual hosts, and/or proxy hosts with unique servers, in any combination (zero to several of each). Whichever configuration is adopted, the private network **330** and the proxy network **430** together form a single logical or apparent network **345**, i.e. a single apparent domain from the point of view of outsiders, such as users on the public network **350**, so that when a user attempts to access a service or host of the private network, the request may be shunted aside to the proxy network to either a mirroring proxy host or a unique proxy host, without any indication being given to the user that this has occurred. (Note that "proxy host" may mean that it is a proxy for an actual host, or may mean that it is a host on the proxy network, albeit a unique host.)

FIG. **7** shows an alternate embodiment of the system of the invention, namely a system **325** wherein the proxy network **430** is implemented entirely in program instructions stored in the memory **400** of the screen **340**, or as additional

processor(s) and memory(-ies) controlled by program instructions stored in one or more of the memories. In this case, the screen **340** and proxy network **430** shown in FIG. **6** constitute separate logical entities, but not separate physical entities (except to the extent that the instructions, data, commands, signals, etc. are themselves separate physical entities). That is, the screen **340** and proxy network may be a single unit In this embodiment, the proxy hosts **360–380** are emulated by the program instructions, so that all of the behavior of any of the actual hosts may be mimicked by a virtual proxy host module. The remainder of the present disclosure is with reference to FIGS. **5–6**, but should be understood as applicable as well to the embodiment of FIG. **7**.

FIG. **8** is a block diagram of the hardware for implementing the system of the invention, showing additional detail of the screen **340** over that shown in FIGS. **5–6**. Like-numbered elements in the drawings are alike; so it will be seen that FIG. **8** additionally shows conventional disk storage **500**, and I/O (input/output) devices **510** such as a smart card, keyboard, mouse, monitor, and/or other standard I/O devices are provided, as well as other desired conventional storage or memory **520**. The instructions or program modules stored in memory **400** control the operation of the screen **340**.

In one embodiment, the screen does not provide conventional user-level access, e.g. does not include the standard keyboard and monitor. This is a security feature to prevent meddling with the screen's configuration. In such an embodiment the screen is administered remotely through a dedicated network port with a secret IP (or other protocol) address that responds only to communications that are authenticated, encrypted and conforming to a dedicated, special-purpose administration protocol. Such a protocol, and the encryption and authentication schemes used, may be developed and/or selected by the screen administrator.

As shown in FIG. **8**, the screen **340** may include, instead of a single port **425** (as in FIG. **5**) connected to a public network, multiple ports **427** may be provided and are connected to multiple public networks, respectively, and may include one or more additional ports **415** connected to other private network(s) **335**. For instance, a private network **335** may be an engineering domain eng.sun.com in a company, while the private network **330** may be a corporate domain corp.sun.con within the same company. The eng-.sun.con and corp.sun.con domains may communicate with one another (if desired, through an additional screen of the invention or a conventional firewall, not shown) via connection **337**, and form a single private internetwork **355**, while both these domains are protected against intrusions from public network(s) **350** by the screening system **340**. The proxy network **430** in this embodiment includes proxies for both the eng. sun. con and corp. sun. con domains.

Thus, although in the remainder of the present discussion it is assumed that the communications in question are between a single public network **350** and a single private network **330**, the features of the invention may equally well be applied to multiple private networks **330**, **335** connected via the screen **340** to multiple public networks **350**.

In the system **530** shown in FIG. **8**A, a private network **540** is provided with a screening system **540** according to the invention, but without the proxy network. In this and the other embodiments, data packets are transmitted in either direction without alteration of their IP addresses, or alternatively with some alteration but without adding any IP or other network address of the screening system itself. The decision to alter addresses or not can be made on a packet-by-packet basis according to the predetermined criteria.

In the system of the invention (including any of the embodiments of **5–9**), the source and destination addresses that are provided with the packet would thus remain (whether altered or not) the sole host identifiers or addresses associated with the packet. In an alternative to this embodiment, the screening system can substitute another network address for either the source address or the destination address (or both), where the newly substituted address is either bogus or belongs to a host other than the screening system. In either case, no network address pertaining to the screening system attaches to a data packet.

As indicated above, the screening system preferably does not even have an IP or other network address, and while it can interpret IP protocol, it is configured not to respond to IP requests. Thus, the screening system avoids detection and hence targeting by intruders.

The operation of the system of FIG. **5–6** will be discussed in detail below in connection with FIGS. **9–11**, but should be understood as to apply to the other embodiments of the invention. Each of the operations, actions or functions to be executed by the system of the invention, as discussed above and hereinafter, may be implemented as program instructions or modules, hardware (e.g. ASICs or other circuitry, ROMs, etc.), or some combination thereof.

General Handling of Data Packets

In FIG. **6**, when a data packet arrives from the public network **350** addressed to one of the hosts or servers **360–380**, it is intercepted by the screen **340**. Such a packet typically will include a source address, a destination address, a requested operation and/or service, and other information, such as a message (if it's email), data to be operated on, and so on.

The screen **340** includes instructions stored in memory **400** governing its control of actions to be taken on the incoming (and outgoing) data packets. These instructions include a predetermined set of criteria based upon the aforementioned contents of the data packets (source and destination addresses, type of service, or other information obtainable from the data packets), and based upon other information, such as: the time of day the packet was sent or is received by the screen; the state of the connection between the public and private networks (or the state of the connection to a particular host or service in the private network); and more obliquely obtainable information, such as whether the source address emanates from an expected (inter) network location. This may be done by determining whether the source host is in the expected domain, or it may be done by determining whether the packet arrives at a network interface expected for that packet. For instance, a packet whose source address is identified as a host on private network **330** should not arrive at network interface **425** (in FIG. **6**) for the public network **350**; if it does, this is an indication that an intruder may be attempting to breach the private network by masquerading as a trusted host. In this case, the screen **340** should drop the packet without reply.

Such screening criteria can be implemented by inspecting the contents of the data packets, by reference to external data (such as connection status and time of day), and by reference to predefined tables or other information useful to implement the criteria and stored in the memory **400**. For instance, a table may be provided of all source addresses allowed to communicate with the network **330** correlated with the types of operations and services they are allowed to use, the times

of day they are allowed to be connected or to pass packets, the expected locations for the sources (since a connection from an unexpected source may indicate a security problem), the number of times a source is allowed to commence a transaction, the total amount of time (e.g. per day or month) that a particular source is allowed to use services of the network **330**, and so on.

The application of the screening criteria lead the screen **340** to take one or several predefined actions or each data packet; these actions are discussed below.

Actions To Be Taken on Packets

Actions are taken on each data packet by the screening system **340**, based upon the foregoing criteria and the particular security protocol and level for that packet as determined in advance by the system administrator. For instance, it may be decided that no packets from (or to) any source that is not cleared in advance will be allowed in; in this case, packets from (or to) any other source will be dropped by the screen **340** without further action, either with or without an error message or other communication back to the sender; the sender will have no indication of what has happened to the packet, and there will be no "bounce" message.

This helps prevent attacks on the system. For instance, if a trace_route packet is received, instead of following the normal IP procedure of responding to the packet the screen of the invention simply discards it, and the initiator of the trace_route command cannot in this way detect the screen.

Topology hiding, i.e. changing the network address of the packet as it passes through the screen, can be done so that it appears that all the packets issuing from the screen come from the same host, even though they are Corning from a multiplicity of sources. This inhibits outsiders attempting to leverage off the knowledge they may gain by learning userid's, host names, etc. within the private network.

Another action can, of course, be to simply pass the packet through to its destination, with or without some alteration based upon predetermined criteria. For instance, it may be decided in advance that all packets from a given host inside private network **330** will have the userid or host ID stripped off, and the packet may be passed through with some other IP source address.

Encryption and decryption may also automatically be executed on certain data packets, with the criteria defined by the system administrator. Along with this it may be desirable to encapsulate a packet and give it a new header with a new IP address, as described for instance in applicant's copending U.S. patent application entitled "System for Signatureless Transmission and Reception of Data Packets Between Computer Networks" by Aziz et al., Ser. No. 08/306,337 filed Sep. 15, 1994, now U.S. Pat. No. 5,548,646, which is incorporated herein by reference.

Packets will normally be logged in the log file storage **640** (especially failed attempts or requests), including whatever information the system administrator decides is important, such as: time of day; source and destination addresses; requested operation(s); other actions taken with respect to each packet; number of requests to date from this source; and so on.

Packets may also be counted, so a running total of the number processed in a certain time period is kept.

Address rewriting is mentioned above; other contents of the packet may also be automatically be rewritten by predefined actions, including rewriting or otherwise altering data or messages carried by packets.

State information about the packets can also be determined, logged if desired, and altered by actions. For instance, TCP/IP (transmission control protocol/internet protocol) status can be affected as desired to establish, maintain or end a connection. In general, the screen can store information about what state each packet is in, and take actions dependent upon that state, including maintaining information about which packet was the initial request, which is the response, and so on; so prior events may have to be stored for some time, but in this case the screen can determine the entire history of a series of transactions and take appropriate actions at each time.

An important action for security purposes is that of sending packets aside to the proxy network **430**, which includes servers/hosts as discussed above that execute operations upon The packets as if the proxy hosts were the actual, intended destination servers. Upon execution of such operations, a proxy host may then return a given packet to the sender, i.e. send the packet off with the original sender's address as the destination. That packet will then go through the screen **340**, which will subject it to the predetermined inspection criteria, just as when it was first received at the screen from, for instance, public network **350**. The criteria will typically have different results for packets emanating from the proxy network **430** or the private network **330**; for instance, it may be decided that no hosts outside the public network may institute telnet sessions to the private network, but that hosts inside the private network tray institute telnet sessions to hosts outside the private network.

The fact that the screening system has no network address (EP or otherwise) enables it to carry out its security functions anonymously; notably, it does not act as a conventional network bridge. If the screen **340** provided the functions of a bridge, it would have to respond to IP commands, and hence would be detectable and targetable.

The proxy network has the additional advantage of preventing outsiders from ever actually entering the private network **330**; once a user has been allowed access or a connection to a private network, it is much more difficult to restrict his/her actions than if no access at all is allowed. By provided duplicate or mirrored proxy functionality of some of the services of the private network in the proxy network, and/or functionality of unique host or other services (hardware and/or software) in the proxy network, the outside user's requests are met while invisibly preventing him/her from ever actually accessing the private network.

In addition, it may be decided that no such sessions may be instituted at all from within the proxy network, which might compromise security of the private network, since packets from the proxy network in general will otherwise have lower hurdles to overcome to be retransmitted by the screen, since they will be more "trusted" by the system. Allowing the proxy network to initiate TCP sessions might allow a intruder from outside the system to effectively bypass the firewall security if he/she can figure out how to cause the proxy network to institute a TCP session instead of having to do so from the public network.

It may be desirable to allow certain connections to be established from the private network to the public network, but not vice versa. For instance, TCP sessions (such as telnet or ftp) may be initiated by a user within the private network **330** to the public network **350**, while blocked from any public network machine to the private network.

In general, all actions taken by the proxy network will pass the packets without identifying the proxy network or any host in it as a separate IP entity. Thus, the packets will,

upon being passed or returned after processing, either appear actually to have been processed by the specified destination host (when in fact the proxy host has handled it), or they will be processed to remove, alter, or otherwise obscure the destination address (which is the source address for return packets). In either case, no IP address for the proxy host exists, and none is appended to any packets.

Functional Architecture of the Screening System

FIG. **9** is a functional block diagram corresponding to FIG. **8**, but showing the functional modules that are used by the screen **340**. In the preferred embodiment these modules are, as indicated above, program instruction modules stored in memory **400** and executed by processor **390**.

The modules shown in FIG. **9** include a packet inspector **600** with a process **602–606** for each of the network interfaces **410–425**; an engine **610** with rules **620**; actions **630** and a log file storage **640**; a packet state table **650**, which is a conventional hash table; a cache fragmentation module **670** (along with a fragmentation bypass as shown); a packet fragmentor **660** coupled to each of the network interfaces **410–425**; and a learning bridge table **680**. The connections shown in FIG. **9** refer to logical (software) instructions or hardware instructions or both, depending upon the particular physical implementation of the invention.

The packet inspector **600** includes the instructions for inspecting the contents of the incoming packets based upon the criteria discussed above. That is, each incoming data packet, wherever it comes from, is subjected to packet inspection by the packet inspector **600**.

The engine **610** processes incoming packets, and passes them to the actions **630** to execute the appropriate operations on the packets, as discussed above. The actions modules **630** are the modules dedicated to performing these operations.

The log file storage **640** is used to store information about the data packets received at the screen **340**, as discussed above. The packet state table **650** is similarly used to store information about states of the received packets.

The fragmentor **660** operates in a conventional manner to fragment packets that are larger than a predefined maximum transmission unit (MTU). This may occur, for instance, where the screen adds information to a packet so as to increase its size past this allowable maximum. A fragmentation cache **670** is used in conventional fashion to implement fragmentation and reconstruction of packets. Fragmentation packets typically include primarily or only an IP header information and data (in particular, no port number is included), and the screen **340** will rebuild the packets as necessary, using the fragmentation cache. That is, the first fragmented packet is stored in the fragmentation cache, as are subsequent fragments, until the last fragmented packet is received, and the packet is then reconstructed.

The fragmentation bypass **675** is used by the packet inspector to bypass the engine operation for fragmented packets for which information is found in the fragmentation cache **670**. Thus, when fragmented packets that second or later in the series of fragmented packets are received, this is detected when the packet inspector **600** checks the fragmentation cache **670**. In such a case, the newly received fragmentation packet is sent via bypass **675** to the actions **630**, rather than via the engine **610**.

The learning bridge table **680** allows the screen **340** to act as a conventional learning bridge, i.e. to keep track of which hosts are on which side of the screen, and maintain tables of this information as packets arrive from one host or another at each of the screen's ports (network interfaces).

Operation of the Screening System

FIGS. **10–11** are flow charts showing a preferred embodiment of the method of the invention. When a packet is sent by a host on, for instance, public network **350**, it is received at port (interface) **425** of the screen **340**. See box **800** in FIG. **10**. The packet inspector inspects the contents of the packet as described above (box **810**).

If the packet is to be rejected, it is efficient to do this by using the learning bridge table (of source addresses) **680**.

One embodiment suitable for implementing packet inspection is shown in the flow chart of FIG. **11**, though many variations are possible. In this exemplary flow chart, upon receipt of the packet (box **900**), each of the packet headers is inspected in order (box **910**), i.e. the physical link (such as IP); the IP header (is it TCP?); the TCP header (as to which port is designated and whether it's an existing or a new connection); and so on.

At box **920** and **940**, negative determinations lead to box **930** for appropriate actions; positive determinations lead to box **950**, where the designated port is determined, and then to box **960**, where it is determined whether this particular connection is allowed, taking into account the information that the packet inspector has at its disposal, including the header information and also the packet contents, source, destination and the other information mentioned above.

If the connection is not allowed, it is blocked (box **970**), but otherwise it is allowed, and then the method tests whether it is an initial connection (box **980**)—if so, then at box **990** the connection is established, and at box **995** information is stored in the state table **650** (see FIG. **9**) to identify the new connection. If not, then the connection is checked at box **1010**, and any update information (e.g. new information about the connection) is stored in table **650**.

From either step **990** or **1020**, the method proceeds to box **1000**, i.e. returns to box **810** in FIG. **10**.

It will be appreciated as mentioned that FIG. **11** is but one embodiment of myriad possible sequences of tests and operations that may be carried out in the packet inspection phase. The operations executed of FIG. **11** may be carried out by the engine **600** based upon the results of the packet inspection (e.g. at boxes **920**, **940**, **960** and **980**).

Proceeding to box **820** in FIG. **10**, the packet is passed to the engine **610**, which executes the appropriate predefined operations discussed above. Typically, for firewall/screen **340** this will involve blocking or passing the packets, where if they are passed they may be turned aside to be operated upon by a proxy host in the proxy network **430**.

The current packet is thus passed to the actions module **630** for execution of the appropriate actions (box **830**), and at box **840** the engine determines whether there are additional actions to be taken, based upon the packet inspector results and its own determination of which actions were appropriate to take. On the first pass through for a given packet, there will be at least one action to take (even if it is only one action, e.g. to drop the packet without further action); so the first time through, box **840** will lead to box **850**, where the first action is taken.

The method then proceeds back to box **830**, and this loop is completed until all actions determined by the engine have been taken by the actions module. At this point, box **840** leads to box **860**, where the screen **340** determines whether there is another packet at one of its input ports (network interfaces). If so, the method begins anew at box **800**, and if not, then the method ends at box **870**. It may recommence any time a new packet is received.

What is claimed is:

1. A method for inhibiting targeting of an addressless screening system coupled between a first computer network and a second computer network, including the steps of:

receiving at the addressless screening system at least one data packet directed from the first network to the second network, the data packet including a source address identifying the first network and a destination address identifying the second network, said addressless screening system being independent of the first computer network;

inspecting the packet based upon a predetermined criterion;

if the predetermined criterion is met, passing the packet through to the second network; and

if the predetermined criterion is not met, then discarding the packet while preventing any response by the addressless screening system to the first network.

2. The method of claim 1, wherein the step of inspecting based upon predetermined criteria includes the step of inspecting at least one of the source address, destination address, source port and destination port for the first data packet.

3. The method of claim 1, wherein the step of inspecting based upon predetermined criteria includes the step of inspecting a type of the requested operation.

4. The method of claim 1, wherein the step of inspecting based upon predetermined criteria includes the step of inspecting a state of the connection between a source in the first network and a destination in the screening system.

5. The method of claim 1, wherein the step of inspecting based upon predetermined criteria includes the step of inspecting the time of day at which the operation is requested.

6. The method of claim 1, wherein the step of inspecting based upon predetermined criteria includes the step of inspecting whether the source is at an expected network location.

7. A protection system for inhibiting targeting of an addressless screening system coupled between a first computer network and a second computer network, the addressless screening system including a processor, a memory coupled to the processor and storing instruction modules executable by the processor, a first network interface coupling the screening system to the first network and a second network interface coupling the screening system to the second network, said addressless screening system being independent of the first network, the protection system including:

a first said module configured for receiving at least one data packet directed from the first network to the second network, the data packet including a source address identifying the first network and a destination address identifying the second network;

a second said module configured for inspecting the packet based upon a predetermined criterion;

a third said module configured for passing the packet through to the second network, if the predetermined criterion is met;

a third said module configured for discarding the packet while preventing any response by the screening system to the first network, if the predetermined criterion is not met.

8. The system of claim 7, wherein said second module is further configured for inspecting the packet based upon at least one of the source address, destination address, source port and destination port for the first data packet.

9. The system of claim 7, wherein said second module is further configured for inspecting the packet based upon a type of the requested operation.

10. The system of claim 7, wherein said second module is further configured for inspecting the packet based upon a state of the connection between a source in the first network and a destination in the screening system.

11. The system of claim 7, wherein said second module is further configured for inspecting the packet based upon the time of day at which the operation is requested.

12. The system of claim 7, wherein said second module is further configured for inspecting the packet based upon whether the source is at an expected network location.

* * * * *