US 20140317397A1

(19) United States

(12) Patent Application Publication

Martini

(10) Pub. No.: US 2014/0317397 A1

(43) Pub. Date: Oct. 23, 2014

(54) **SELECTIVELY PERFORMING MAN IN THE MIDDLE DECRYPTION**

(71) Applicant: **iboss, Inc.**, San Diego, CA (US)

(72) Inventor: **Paul Michael Martini**, San Diego, CA (US)

(73) Assignee: **iboss, Inc.**, San Diego, CA (US)

(21) Appl. No.: **14/265,540**

(22) Filed: **Apr. 30, 2014**

Related U.S. Application Data

(63) Continuation of application No. 13/865,850, filed on Apr. 18, 2013, now Pat. No. 8,739,243.

Publication Classification

(51) **Int. Cl.**
H04L 29/06 (2006.01)

(52) **U.S. Cl.**
CPC *H04L 63/107* (2013.01)
USPC **713/153**

(57) **ABSTRACT**

A device within the network receives a domain name service (DNS) request for an address of a first resource outside the network, the first resource associated with a security policy of the network. An address of a second resource within the network is returned to the device within the network in response the DNS request, the second resource address having previously been associated with the first resource address. A first encrypted connection is established between the device and the second resource, and a second encrypted connection is established between the second resource and the first resource, to facilitate encrypted communication traffic between the device and the first resource. The encrypted communication traffic passing between the device and the first resource is selectively decrypted and inspected depending on the address of the first resource.

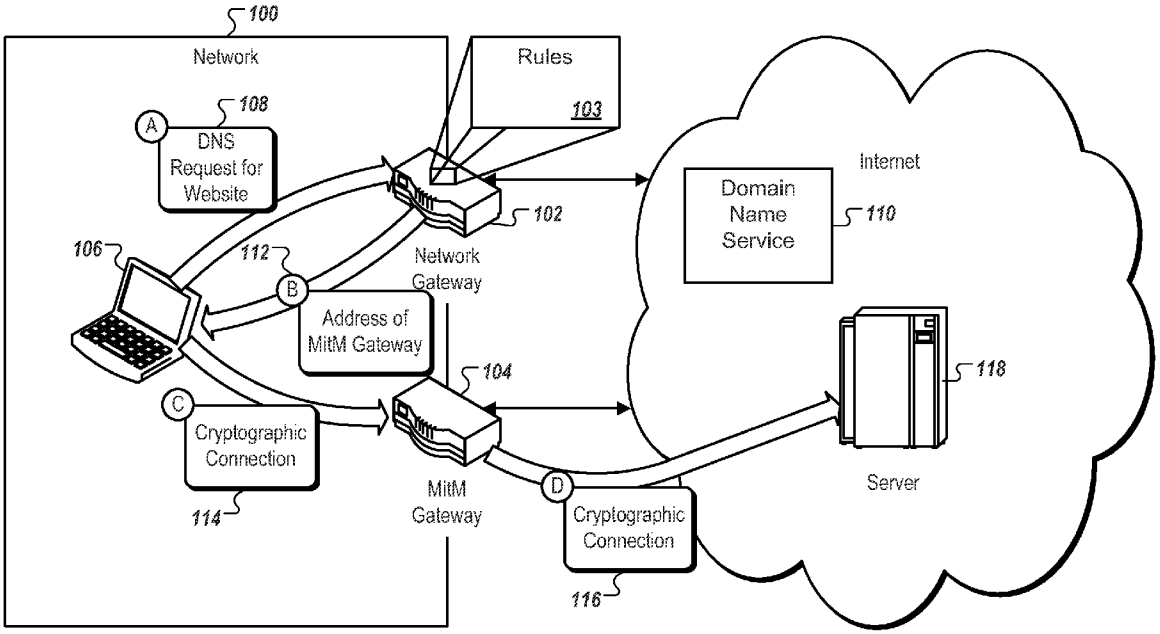

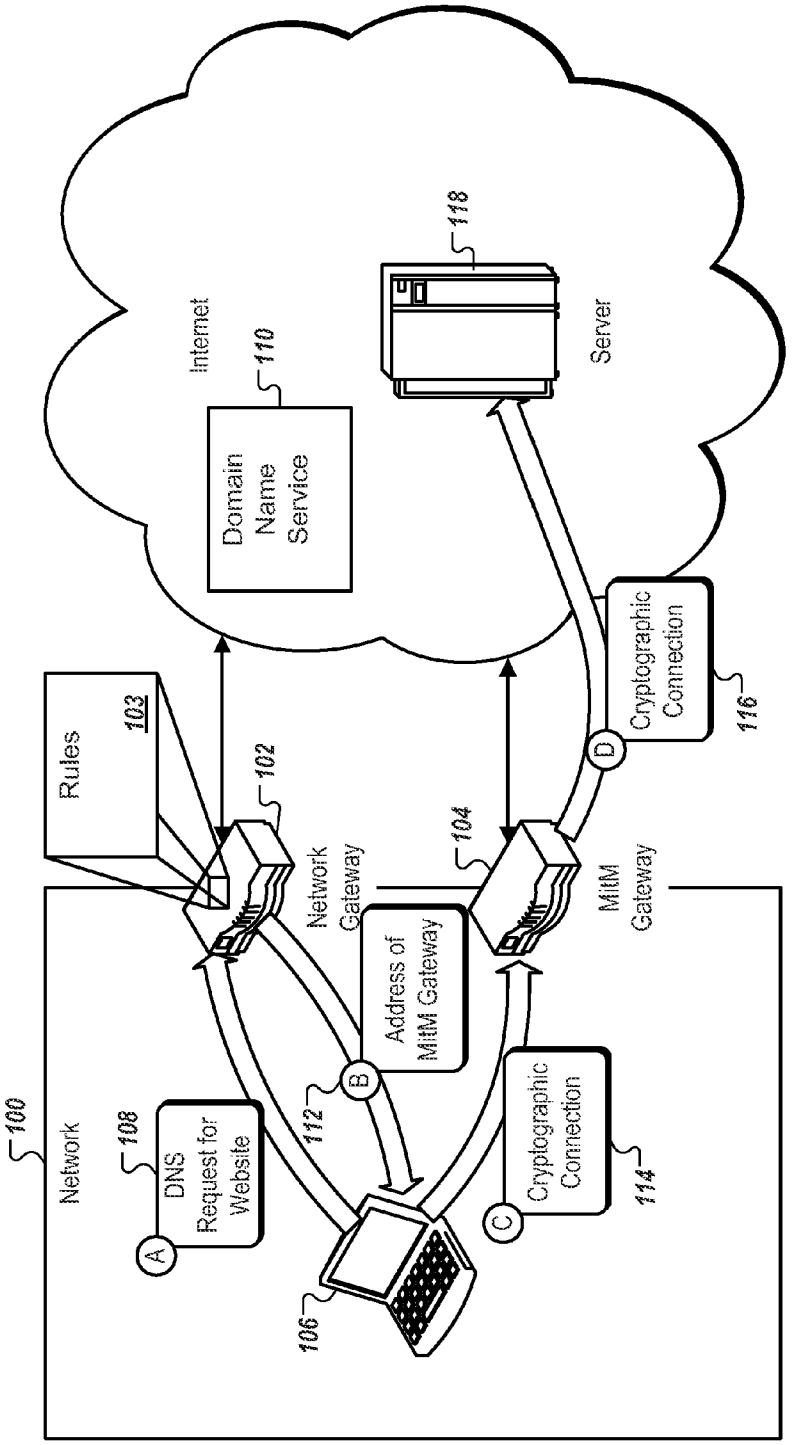
100
Network
108
DNS Request for Website
A
Rules
103
102
Network Gateway
106
112
B
Address of MitM Gateway
104
MitM Gateway
C
Cryptographic Connection
114
D
Cryptographic Connection
116
Internet
110
Domain Name Service
118
Server

FIG. 1

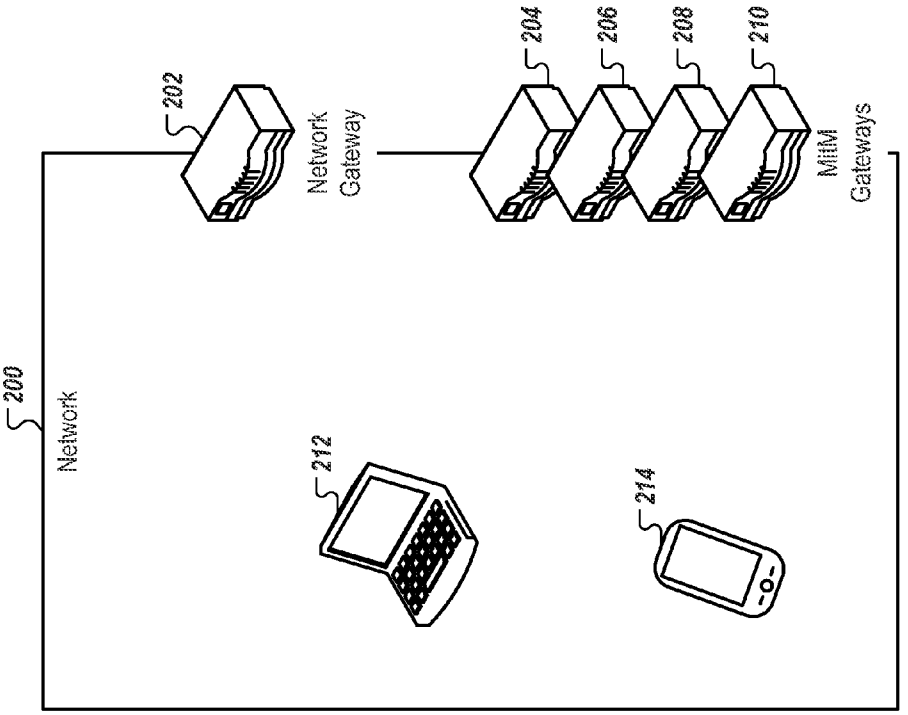
200
Network
202
Network
Gateway
212
204
206
208
210
MitM
Gateways
214

FIG. 2

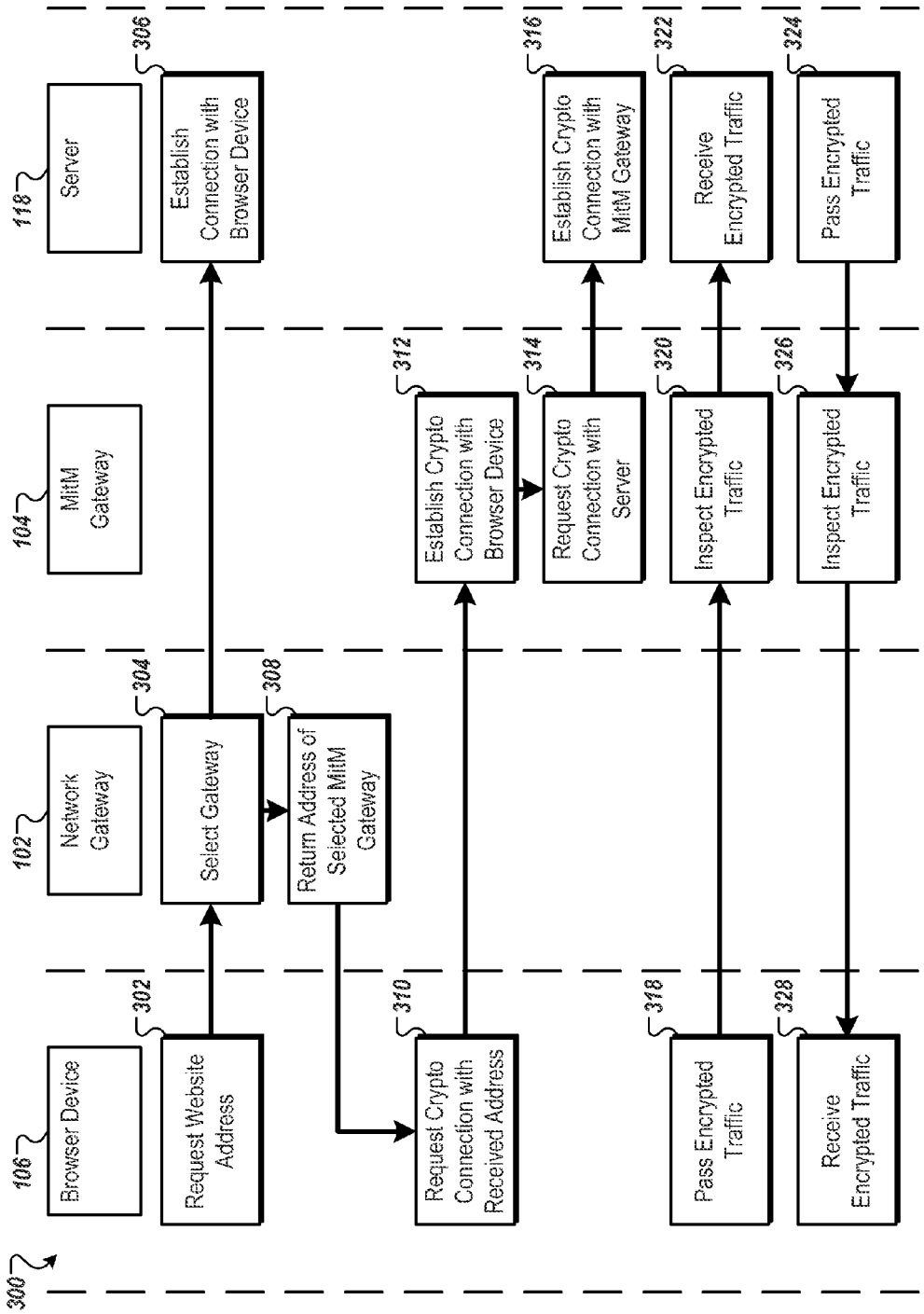
300
106
Browser Device
102
Network Gateway
104
MitM Gateway
118
Server
302
Request Website Address
304
Select Gateway
306
Establish Connection with Browser Device
308
Return Address of Selected MitM Gateway
310
Request Crypto Connection with Received Address
312
Establish Crypto Connection with Browser Device
314
Request Crypto Connection with Server
316
Establish Crypto Connection with MitM Gateway
318
Pass Encrypted Traffic
320
Inspect Encrypted Traffic
322
Receive Encrypted Traffic
324
Pass Encrypted Traffic
326
Inspect Encrypted Traffic
328
Receive Encrypted Traffic

FIG. 3

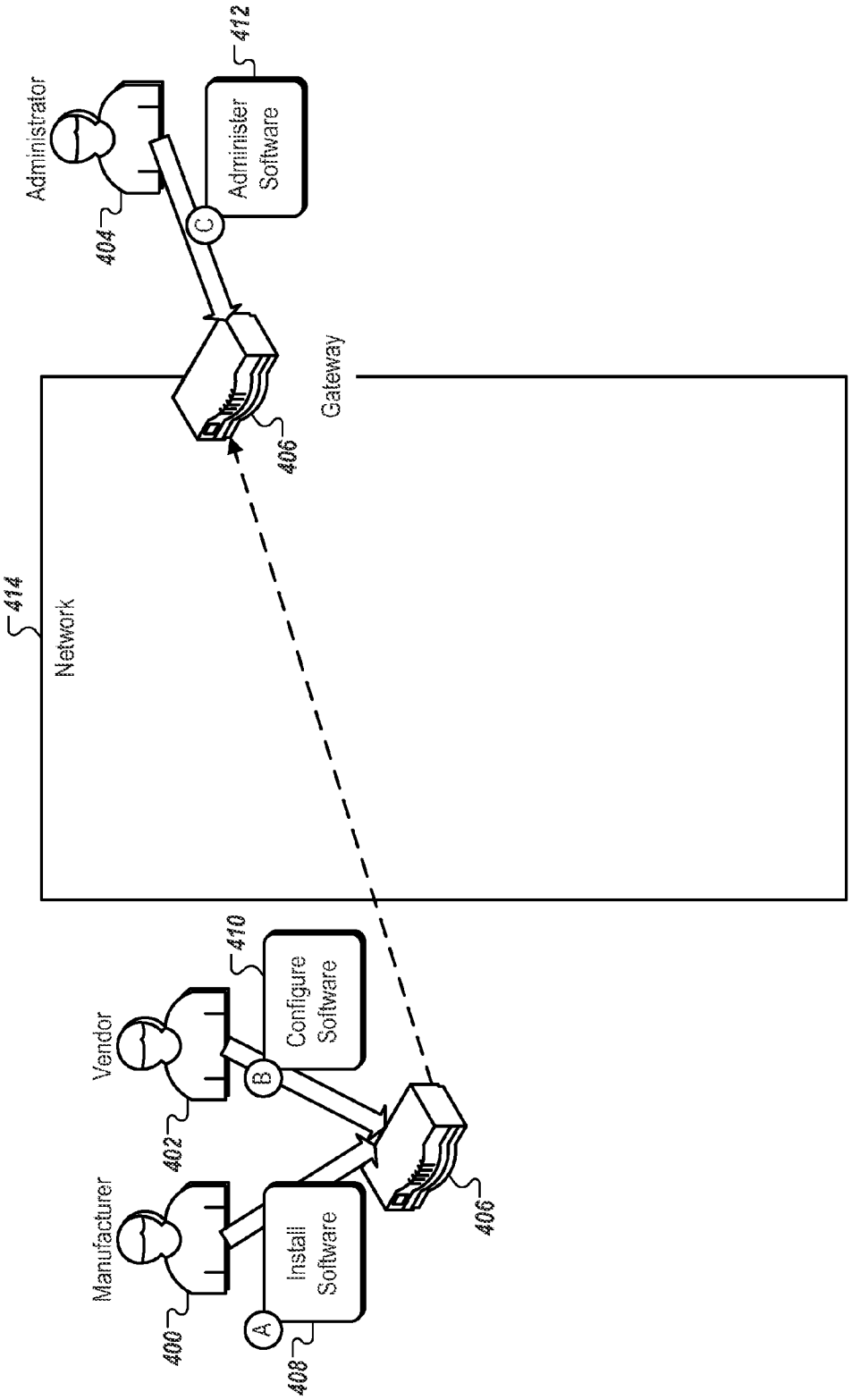
Administrator
404
C
Administer Software
412
Gateway
406
414
Network
Vendor
402
B
Configure Software
410
Manufacturer
400
A
Install Software
408
406

FIG. 4

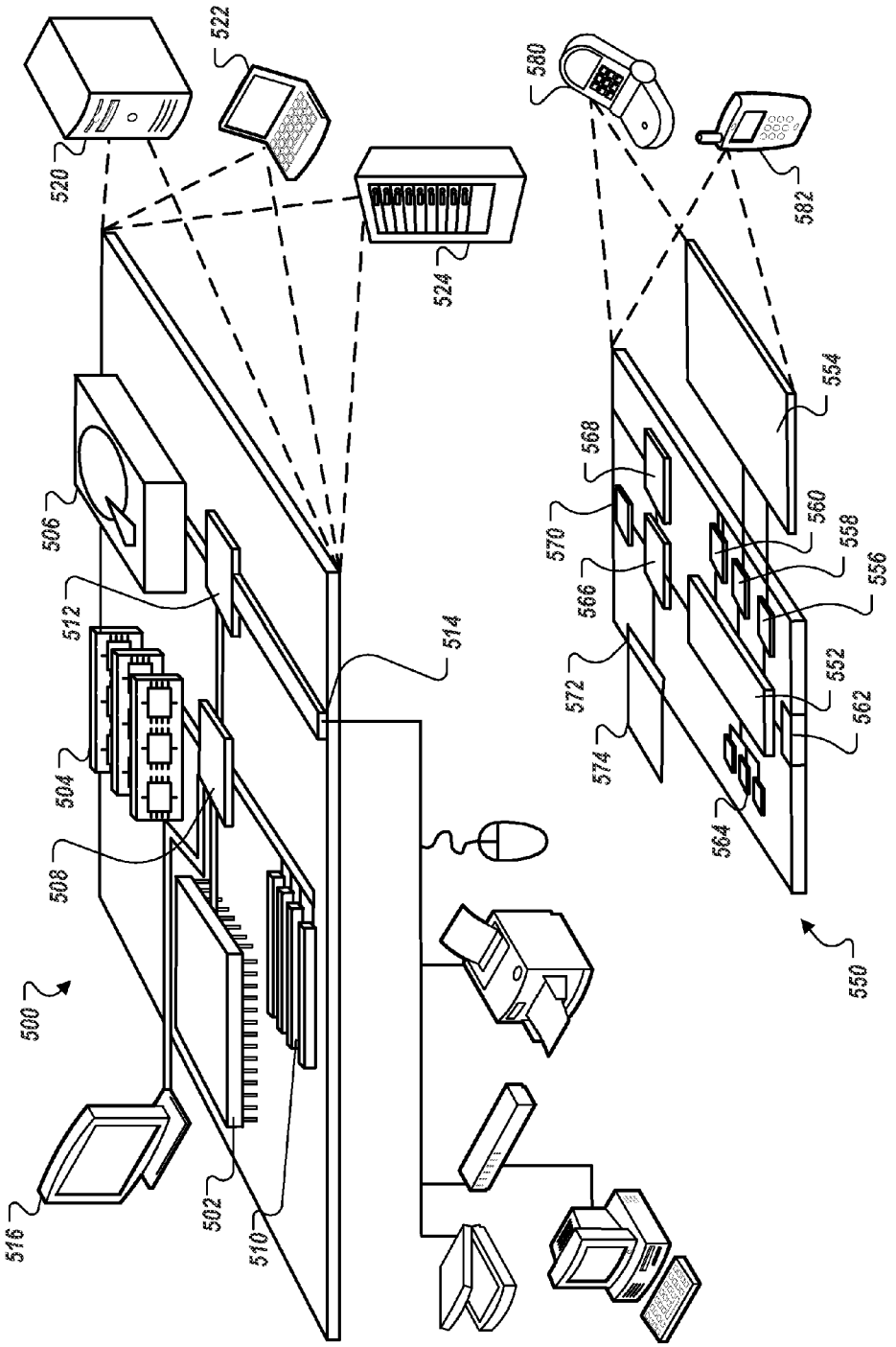
500
502
504
506
508
510
512
514
516
520
522
524
550
552
554
556
558
560
562
564
566
568
570
572
574
580
582

FIG. 5

SELECTIVELY PERFORMING MAN IN THE MIDDLE DECRYPTION

CROSS-REFERENCE TO RELATED APPLICATIONS

[0001] This application is a continuation application of and claims priority to U.S. application Ser. No. 13/865,850, filed on Apr. 18, 2013, the entire contents of which are hereby incorporated by reference.

TECHNICAL FIELD

[0002] The present document relates to computer networking

BACKGROUND

[0003] A computer network is a collection of computers and other hardware interconnected by communication channels that allow sharing of resources and information. Communication protocols define the rules and data formats for exchanging information in a computer network. A gateway on a network is a node on the network equipped for interfacing with another network or networks. The gateway is often used for passing data between devices on different networks. Transport Layer Security (TLS) and Secure Socket Layer (SSL) are two examples of cryptographic communication protocols that provide communication security by allowing devices to exchange encrypted, as opposed to plaintext, messages.

SUMMARY

[0004] A network can include a network gateway for unencrypted communication with other networks. To facilitate selective man in the middle decryption of encrypted communication, Domain Name Service (DNS) requests from browser devices that pass through the network gateway can be intercepted, and responded to, by the network gateway, with the address or addresses of one or more man in the middle (MitM) gateways within the network. The browser device may the initiate a cryptographic session with a MitM gateway found at one of the addresses. The MitM gateway may act as a proxy for the website requested in the DNS request, providing the browser device with secure communications to the website while permitting traffic inspection at the network border.

[0005] In one aspect, a method is performed by data processing apparatuses. The method includes receiving, from a device within the network, a domain name service (DNS) request for an address of a first resource outside the network, the first resource associated with a security policy of the network. The method further includes returning, to the device within the network in response the DNS request, an address of a second resource within the network, the second resource address having previously been associated with the first resource address. The method further includes establishing a first encrypted connection between the device and the second resource, and a second encrypted connection between the second resource and the first resource, to facilitate encrypted communication traffic between the device and the first resource. The method further includes selectively decrypting and inspecting the encrypted communication traffic passing between the device and the first resource depending on the address of the first resource.

[0006] Implementations can include any, all, or none of the following features. The address of the first resource is determined by the second resource based on the address of the second resource. Decrypting and inspecting the encrypted communication traffic includes blocking the encrypted communication traffic. The method including selecting the second device from a plurality of available devices within the network. The second device is selected based on a comparison of the first resource with a rule defining destinations associated with encrypted communication traffic. The second device is selected based on hardware performance. The method including receiving, from a second device within the network, a second domain name service (DNS) request for an address of a third resource outside the network; sending, to the DNS, the second DNS request; receiving, from the DNS, a DNS response; returning, to the second device within the network in response the second DNS request, the second DNS request; and establishing a third encrypted connection between the second device and the third resource, to facilitate encrypted communication traffic between the second device and the third resource.

[0007] In one aspect, a computer storage media is encoded with computer program instructions that, when executed by one or more processors, cause a computer device to perform operations. The operations include receiving, from a device within the network, a domain name service (DNS) request for an address of a first resource outside the network, the first resource associated with a security policy of the network. The operations further include returning, to the device within the network in response the DNS request, an address of a second resource within the network, the second resource address having previously been associated with the first resource address. The operations further include establishing a first encrypted connection between the device and the second resource, and a second encrypted connection between the second resource and the first resource, to facilitate encrypted communication traffic between the device and the first resource. The operations further include selectively decrypting and inspecting the encrypted communication traffic passing between the device and the first resource depending on the address of the first resource.

[0008] Implementations can include any, all, or none of the following features. The address of the first resource is determined by the second resource based on the address of the second resource. Decrypting and inspecting the encrypted communication traffic includes blocking the encrypted communication traffic. The operations further include selecting the second device from a plurality of available devices within the network. The second device is selected based on a comparison of the first resource with a rule defining destinations associated with encrypted communication traffic. The second device is selected based on hardware performance. The operations further include receiving, from a second device within the network, a second domain name service (DNS) request for an address of a third resource outside the network; sending, to the DNS, the second DNS request; receiving, from the DNS, a DNS response; returning, to the second device within the network in response the second DNS request, the second DNS request; and establishing a third encrypted connection between the second device and the third resource, to facilitate encrypted communication traffic between the second device and the third resource.

[0009] A system comprises one or more processors configured to execute computer program instructions and computer

storage media encoded with computer program instructions that, when executed by one or more processors, cause a computer device to perform operations. The operations include receiving, from a device within the network, a domain name service (DNS) request for an address of a first resource outside the network, the first resource associated with a security policy of the network. The operations further include returning, to the device within the network in response the DNS request, an address of a second resource within the network, the second resource address having previously been associated with the first resource address. The operations further include establishing a first encrypted connection between the device and the second resource, and a second encrypted connection between the second resource and the first resource, to facilitate encrypted communication traffic between the device and the first resource. The operations further include selectively decrypting and inspecting the encrypted communication traffic passing between the device and the first resource depending on the address of the first resource.

[0010] Implementations can include any, all, or none of the following features. The address of the first resource is determined by the second resource based on the address of the second resource. Decrypting and inspecting the encrypted communication traffic includes blocking the encrypted communication traffic. The operations further include selecting the second device from a plurality of available devices within the network. The second device is selected based on a comparison of the first resource with a rule defining destinations associated with encrypted communication traffic. The second device is selected based on hardware performance. The operations further include receiving, from a second device within the network, a second domain name service (DNS) request for an address of a third resource outside the network; sending, to the DNS, the second DNS request; receiving, from the DNS, a DNS response; returning, to the second device within the network in response the second DNS request, the second DNS request; and establishing a third encrypted connection between the second device and the third resource, to facilitate encrypted communication traffic between the second device and the third resource.

[0011] The systems and processes described here may be used to provide a number of potential advantages. A gateway can decouple domains from shared Internet Protocol (IP) addresses and selectively choose to intercept SSL, TLS, etc requests. If spoofed IP addresses are another server on the network, performance issues may be alleviated as only selective requests are sent to man in the middle (MitM) gateways fror decryption. Cryptographically protected traffic can be inspected at network egress and ingress, allowing a network administrator to enforce security policies consistently across both cryptographically protected traffic and plaintext traffic. By using standard communication protocols, browser devices (e.g. cell phones, tablets, laptops) can join the network with little or no special configuration.

DESCRIPTION OF DRAWINGS

[0012] FIG. **1** is a block diagram of a network with a network gateway and a man in the middle gateway.

[0013] FIG. **2** is a block diagram of a network with a network gateway and a group of man in the middle gateways.

[0014] FIG. **3** is a swim-lane diagram of an example process for establishing a communication link through a man in the middle gateway.

[0015] FIG. **4** is a block diagram showing example users responsible for a gateway.

[0016] FIG. **5** is a schematic diagram that shows an example of a computing device and a mobile computing device.

[0017] Like reference symbols in the various drawings indicate like elements

DETAILED DESCRIPTION

[0018] When data on a network is encrypted (e.g., by SSL or TSL) the data can pose challenges to network security appliances and routines in that it makes it difficult to inspect the data as it is transferred between the end users and servers on the Internet. This can lead to problems such as viruses being transferred over secure connections and entering the network instead of being blocked because the gateway security appliances could not inspect the data. In addition, organizational policies cannot be applied since the data within the encrypted traffic is protected causing security functions to fail as they cannot inspect the data.

[0019] Described in this document is a use of man in the middle decryption based on rules indicating which destinations should be decrypted and which should be passed directly to the Internet destination. A modified use of the Domain Name System (DNS) maps specific spoofed IP addresses to correlated domain in order to, among other uses, determine which encrypted connections should by bypassed and sent directly to the Internet destination and which connections should be decrypted using a man in the middle technique.

[0020] A computer network typically has one or more gateways that allow communication between devices on the network and devices on other networks (e.g. the Internet). One such gateway can be a network gateway that routes plaintext (i.e., non-encrypted) traffic among devices within the network and devices outside of the network. One common type of plaintext traffic that is routed through a network gateway is a DNS request, which is a request to the DNS to resolve a uniform resource locator (URL) or uniform resource indicated (URI) to an associated Internet Protocol (IP) address.

[0021] Instead of passing all DNS requests to the DNS, the network gateway can intercept some of the DNS requests if the network gateway determines that traffic between the network devices and the URLs or URIs will be encrypted. For these DNS requests, the network gateway can respond to the network device with the address or addresses of one or more man in the middle (MitM) gateways in the network. The MitM gateways may then act as man in the middle proxies for the resource at the URL or URI, allowing cryptographically secure communication that can be inspected when entering or exiting the network.

[0022] FIG. **1** is a block diagram of a network **100** with a network gateway **102** and a MitM gateway **104**. Also shown in the network **100** is a browser device **106**, which represents any appropriate computing device capable of browsing resources outside of the network **100**. While not shown for clarity's sake, the network **100** can include other elements including, but not limited to, wireless and/or wired access points, file and/or application servers, routers, and network cables, as well as additional browser devices **106**, network gateways **102**, and/or MitM gateways **104**.

[0023] The network **100** can be configured to route some or all of the plaintext messages addressed outside the network to the network gateway **102**. The network gateway **102** can

inspect the plaintext messages and, optionally, modify or drop some messages. For example, the network gateway **102** may be configured to prevent traffic from a particular class of application (e.g., chat, files sharing). The network gateway **102** may also be configured to intercept messages intended for a recipient outside of the network **100** and reply directly. This process is sometimes referred to as spoofing.

[0024] For example, the network gateway may intercept and examine a DNS request **108** from the browser device **106** that is addressed to the DNS **110**. Based on, for example, the URL or URI in the DNS request **108** and rules **103** indicating which destination should be decrypted and which should be passed directly to the Internet destination, the network gateway **102** may determine that, instead of passing the DNS request **108** to the DNS **110**, the network gateway **102** should respond to the DNS request with a MitM gateway address **112**. The network gateway **102** may be configured to make this determination so that encrypted communication from the browser device **106** first passes through the MitM gateway **104**, thereby allowing the gateway **104** to decrypt the communication and perform man in the middle data inspection before allowing the communication to pass out of the network **100**. The network gateway **102** may make the determining to pass encrypted communication through the MitM gateway **104** based on security policies or concerns as applied to the network **100**. While passing communication through the MitM **104** may provide some other benefits (e.g., caching of frequently visited resources to reduce bandwidth usages), the rules **103** may be configured to primarily or exclusively account for the security considerations of passing communications through the network gateway **102** or the MitM gateway **104**.

[0025] The browser device **106**, upon receiving the MitM gateway address **112**, can initialize a cryptographic connection **114** with the MitM gateway **104** at the MitM gateway address **112**. The cryptographic connection **114** may be an SSL, TLS, or any other appropriate cryptographic session. The MitM gateway **104** may then initialize another cryptographic connection **116** with a server **118** that hosts the resource identified by the URL or URI of the DNS request **108**.

[0026] Once the cryptographic connections **114** and **116** are established, the browser device **106** and the server **118** may communicate with each other. In this communication, the MitM gateway **104** may act as a proxy of the server **118** for the browser device **106** and as a proxy of the browser device **106** for the server **118**. The MitM gateway **104** is thus able to receive an encrypted message from the browser device **106**, decrypt the message, inspect the message, optionally alter or drop the message, encrypt the possibly altered message into a second encrypted form, and pass the message to the server **118**. The MitM gateway **104** may perform the same type of reception, decryption, inspection, alteration or drop, encryption, and passage with messages from the server **118** to the browser device **106**. The MitM gateway **104** may sometimes be referred to by other terms including, but not limited to, a reverse proxy, intercepting proxy, accelerator, accelerating proxy, and transparent proxy.

[0027] The inspection, alteration, and dropping can allow the MitM gateway **104** to ensure that encrypted communication into and out of the network conforms to any number of policies. For example, the network **100** may have a policy of inspecting incoming messages for computer viruses, malware, or other unwanted content. The network gateway **102**, handling plaintext messages, can inspect the payloads of the messages and drop any messages that match viral signatures, malware black-lists, etc. The MitM gateway **104** may apply the same policy, inspecting incoming messages in their decrypted state and drop any messages that fail the same tests as applied by the network gateway **102**.

[0028] FIG. **2** is a block diagram of a network **200** with a network gateway **202** and a group of MitM gateways **204-210**. The network **200** can be configured to route some or all of the plaintext messages addressed outside the network to the network gateway **202**. The network gateway **202** can inspect the plaintext messages and, optionally, modify or drop a message. The network gateway **202** may also be configured to intercept and examine a DNS requests from browser devices **212** and **214** and respond directly with the address or addresses of one or more of the MitM gateways **204-210**.

[0029] In general, decryption and encryption of network data may be a computationally intensive task for network appliances such as gateways. To alleviate performance issues, and for other reasons, the network gateway **202** and the group of MitM gateways **204-210** may be used to share or balance the load of the MitM gateways **204-210**. The network gateway **202** may respond to a DNS request from a browser device **212** or **214** with address of all available MitM gateways **204-210** in the network **200**. The browser devices **212** or **214** may then initiate a cryptographic connection with one the MitM gateway **204-210** in order to attempt to reach the resource specified in the DNS request.

[0030] The network gateway **202** may be configured to provide the addresses of the MitM gateways **204-210** in any appropriate scheme, for example, in any way that is permitted by the DNS standards. In one example, the network gateway **202** may always respond with the addresses in the same order. In another example, the network gateway **202** may rotate the order of addresses. The browser devices **212** and **214** may be configured to select one address from the group of returned addresses in any appropriate scheme, for example, in any way that is permitted by the DNS standard. In one example, the browser devices **212** and **214** may pseudorandomly select one of the addresses. In another example, the browser devices **212** and **214** cache a ping time every time an address is connected with, and the browser devices **212** and **214** may select the returned address associated with the lowest ping time.

[0031] In some cases, the network gateway **202** and the group of MitM gateways **204-210** may be used to route different classes of traffic to different MitM gateways **204-210**. This may be desirable, for example, if policies of the network **200** specify that different policy tests should apply to different classes of encrypted traffic. Additionally, this may reduce the occurrence of prompts to a user that an encryption certificate is untrusted. The prompts may be acceptable, for example, if they only appear on less sensitive sites such as non-banking sites. Since only select sites may be subject to MitM inspection, the concerns for data loss may be greatly reduced.

[0032] In one example, the MitM gateway **204** may be configured to handle encrypted traffic that is generally unrestricted. That is, the encrypted traffic may not be inspected, modified, or dropped at all, or may be only minimally inspected (e.g., encrypted VPN (Virtual Private Network) traffic to and from a network at a branch office). For another class of traffic, the network administrator may wish to inspect only incoming traffic for virus, malware, or other malicious code (e.g., encrypted traffic to banking or financial institu-

tions). For a third class of traffic, the network administrator may wish to inspect outgoing traffic to make sure secret or proprietary data is not being transmitted and inspect incoming traffic for malicious code (e.g., social networking and hosted storage sites). For a fourth class of data, a hosted application provider may share the same IPs for some services that should be permitted and for some services that should be blocked (e.g., an application provider hosts email and document sharing, which should be allowed, as well as media streaming, which should be blocked).

[0033] In this example, the MitM gateways **204-210** can be configured as follows:

MitM gateway 204	Perform no inspection of data.
MitM gateway 206	Inspect and drop incoming data that contains malicious code.
MitM gateway 208	Inspect and drop incoming data that contains malicious code. Inspect and drop outgoing data that contains secret or proprietary data.
MitM gateway 210	Inspect and drop incoming data that contains malicious code. Determine which service the data is associated with, dropping any related to blocked services.

[0034] To route traffic from the browser devices **212** and **214**, the network gateway **202** may inspect received DNS requests and determine which of the MitM gateways **204-210** should handle the encrypted traffic. For example, the network gateway **202** may have a list that maps URLs and URIs to categories based on the type of content available at the URL or URI. When the network gateway **202** receives a DNS request, the network gateway **202** can compare the URL or URI of the DNS request to the list. If the request's URL or URI is not on the list, the network gateway **202** can pass the DNS request to the DNS for resolution. If the URL or URI is on the list, the network gateway **202** can respond to the requesting browser device **212** or **214** with the address of one of the MitM gateways **204-210** configured to handle traffic associated with the category that the URL or URI falls under.

[0035] Two browser devices **212** and **214** are shown in FIG. **2**, however, these browser devices and other browser devices can enter and exit the network **200** over time. For example, a worker may bring one or more of her employer's or her own devices (e.g., laptop, phone, tablet) into the network **200** at the start of the day and remove the devices at the end when she goes home. Other than the configurations need to join the network (e.g. Wi-Fi passwords, plugging in Ethernet cords), the network **200** need not require any special configuration to ensure that encrypted traffic is routed through the correct MitM gateways **204-210** due to the fact that all messages to and from the browser devices conform to standards that are commonly supported on many common hardware, operating system, and browser systems.

[0036] FIG. **3** is a swim-lane diagram of an example process **300** for establishing a communication link through a MitM gateway. The process **300** is described with reference to the components shown in FIG. **1**. However, other components, including and not limited to the components shown in FIG. **2**, can be used to perform the process **300** or a similar process.

[0037] The browser device **106** creates a request for a website address (**302**). For example, a user may request to download, from a hosted storage system, a data object identified by a unique URI. The browser device can create a DNS request that includes the data object's URI and send the DNS request to the network gateway **102**.

[0038] The network gateway **102** receives the request and selects a gateway to be used for traffic associated with the website address (**304**). For example, the network gateway **102** can process a set of rules **103** that indicate which destination should be decrypted and which should be passed directly to the Internet destination. These rules **103** may include, for example, a list of domain names and IP address mapped to security policies, content classifications, or directions for handling of network traffic (e.g., specifying that the traffic should be decrypted and inspected). By performing this determination on a DNS request for a resource, as opposed to for example an IP address for the resource, the network gateway **102** can handle all request to a resource in the same way, regardless of changes to the mapping between domain names and IP addresses. That is, the network gateway **102** does not need to keep a mapping of IP addresses to domain names, because the domain name or address for most resources is the permanent or canonical address of the resource.

[0039] If the network gateway **102** selects the network gateway **102** for the traffic to pass directly to the Internet destination, the browser device **106** and the server **118** establish a connection through the network gateway **102** (**306**). For example, if the network gateway **102** determines that the browser device **106** is likely to start an unencrypted communication session with the hosted storage system, the network gateway **102** can pass the DNS request to the DNS **110** (see FIG. **1**) and permit the browser device **106** to create an unencrypted connection with the server **118**.

[0040] If the network gateway **102** selects the MitM gateway **104**, the network gateway **102** returns the address of the selected MitM gateway **104** (**308**). For example, the network gateway **102** may have a record of past connections with the hosted storage system and determine that the hosted storage system usually communicates through encrypted communication channels. In such a case, the network gateway **102** may select the MitM gateway **104** for the communication between the browser device **106** and the server **118** and thus may return the network address of the MitM gateway **104** to the browser device **106**. The browser device **106** may have no indication that the address received is the address for the MitM gateway **104** and not for the server **118**, as requested.

[0041] The browser device **106** requests an encrypted connection with the device at the received address, which is the MitM gateway **104** (**310**). For example, the browser device **106** may send to the MitM gateway **104** an SSL Hello or other encryption handshake message indicating the URL of the server **118** (or a resource of the server **118** such as the data object to be requested). In another example, the MitM gateway **104** may have multiple network addresses, each associated with known destination URLs. When a connection request is received at one of the multiple addresses, the MitM gateway **104** may look up the associated URL. The browser device **106** and the MitM gateway **104** establish a first encrypted connection (**312**). For example, the MitM gateway **104** may act as a proxy of the server **118**, mimicking the interface of the server **118** in communications with the browser device **106**.

[0042] The MitM gateway **104** requests an encrypted connection with the server **118** (**314**). For example, the MitM gateway **104** can use the URL of the encryption handshake from the browser device **106** to request an encrypted connec-

tion on behalf of the browser device **106**. The MitM gateway **104** and the server **118** establish a second encrypted connection (**316**). For example, the MitM gateway **104** may act as a proxy of the browser device **106**, mimicking the interface of the browser device **106** in communications with the server **118**. The two encryption sessions may be of the same or different formats or types.

[0043] The browser device **106** generates traffic, encrypts the traffic into a first encrypted form, and passes the traffic to the MitM gateway **104** (**318**). For example, the browser device can create a HTTP Get request for the data object. The browser device can encrypt the HTTP Get request according to the requirements of the encrypted connection with the MitM gateway **104** and pass the encrypted HTTP Get request to the MitM gateway **104**.

[0044] The MitM gateway **104** receives the traffic, decrypts the traffic, inspects the traffic, encrypts the traffic into a second encrypted form, and passes the traffic to the server **118** (**320**). For example, the MitM gateway **104** can decrypt the encrypted message into plaintext and determine that the message is an HTTP Get request. The MitM gateway **104** can compare the HTTP Get request with the rules of any policies that apply to traffic out of the network **100**. If the HTTP Get request does not violate any policy, the MitM gateway **104** can encrypt the HTTP Get request according to the requirements of the encrypted connection with the server **118** and pass the encrypted HTTP Get request to the server **118**. If the HTTP Get request does violate a policy, the MitM gateway **104** can modify or drop the request, as specified by the policy.

[0045] The server **118** receives the traffic in the second encrypted form (**322**). For example, the server **118** may receive the encrypted HTTP Get request, decrypt the HTTP Get request, and determine that the user of the browser device **106** has authorization to access the requested data object.

[0046] The server **118** generates traffic, encrypts the traffic into a third encrypted form, and passes the traffic to the MitM gateway **104** (**324**). For example, the server **118** can access the requested data object, format the data object into XML or other appropriate format, and add the XML object to an HTTP reply. The server **118** can encrypt the HTTP reply according to the requirements of the encrypted connection with the MitM gateway **104** and pass the encrypted HTTP reply to the MitM gateway **104**

[0047] The MitM gateway **104** receives the traffic, decrypts the traffic, inspects the traffic, encrypts the traffic into a fourth form, and passes the traffic to the browser device **106** (**326**). For example, the MitM gateway **104** can decrypt the encrypted message into plaintext and determine that the message is an HTTP reply. The MitM gateway **104** can compare the HTTP reply with the rules of any policies that apply to traffic into the network **100**. If the HTTP reply does not violate any policy, the MitM gateway **104** can encrypt the HTTP reply according to the requirements of the encrypted connection with the browser device **106** and pass the encrypted HTTP reply to the browser device **106**. If the HTTP reply does violate a policy (e.g., contains malicious code, too large), the MitM gateway **104** can modify or drop the reply, as specified by the policy.

[0048] The browser device **106** receives the encrypted traffic (**328**). For example the browser device can decrypt the HTTP reply, extract the XML object, and store the XML object to disk.

[0049] Although a particular number, type, and order of operations are shown here, other numbers, types, and orders of operations are possible. For example, if there are multiple MitM gateways available, the network gateway **102** may select one or more and return the addresses of selected MitM gateways. In another example, the browser device **106** and the server **118** may create and pass encrypted traffic in the opposite order shown here or substantially at the same time.

[0050] FIG. **4** is a block diagram showing example users responsible for a gateway. The users will be described according to their responsibilities for manufacturing, selling, and administering a gateway. In some cases, each of the users shown corresponds to many users, and/or some users may be responsible for more than on task described.

[0051] A manufacturer **400** is responsible for designing, assembling, and installing software **408** on a gateway **406**. The installed software may have many configurable options, including options to configure the gateway **406** to behave as a network gateway **102** or **202** and/or as a MitM gateway **104** or **204-210**.

[0052] A vendor **402** is responsible for selling the gateway **406** to a customer. The vendor **402** may be able to configure the software **410** of the gateway **406** to behave as a network gateway **102** or **202** and/or as a MitM gateway **104** or **204-210**. In some cases, the vendor **402** may replace the software that the manufacturer **400** installed on the gateway **406** as part of configuring the gateway **406**.

[0053] An administrator **404** is responsible for administering the network **414**, which may include the gateway **406**. In some cases, the administrator **404** is able to configure the software **410** of the gateway **406** to behave as a network gateway **102** or **202** and/or as a MitM gateway **104** or **204-210**. In some cases, the administrator **404** may replace the software that the manufacturer **400** or vendor **402** installed on the gateway **406** as part of configuring the gateway **406**.

[0054] FIG. **5** shows an example of a computing device **500** and an example of a mobile computing device that can be used to implement the techniques described here. The computing device **500** is intended to represent various forms of digital computers, such as laptops, desktops, workstations, personal digital assistants, servers, blade servers, mainframes, and other appropriate computers. The mobile computing device is intended to represent various forms of mobile devices, such as personal digital assistants, cellular telephones, smart-phones, and other similar computing devices. The components shown here, their connections and relationships, and their functions, are meant to be exemplary only, and are not meant to limit implementations of the inventions described and/or claimed in this document.

[0055] The computing device **500** includes a processor **502**, a memory **504**, a storage device **506**, a high-speed interface **508** connecting to the memory **504** and multiple high-speed expansion ports **510**, and a low-speed interface **512** connecting to a low-speed expansion port **514** and the storage device **506**. Each of the processor **502**, the memory **504**, the storage device **506**, the high-speed interface **508**, the high-speed expansion ports **510**, and the low-speed interface **512**, are interconnected using various busses, and may be mounted on a common motherboard or in other manners as appropriate. The processor **502** can process instructions for execution within the computing device **500**, including instructions stored in the memory **504** or on the storage device **506** to display graphical information for a GUI on an external input/output device, such as a display **516** coupled to the high-speed interface **508**. In other implementations, multiple processors and/or multiple buses may be used, as appropriate, along with

multiple memories and types of memory. Also, multiple computing devices may be connected, with each device providing portions of the necessary operations (e.g., as a server bank, a group of blade servers, or a multi-processor system).

[0056] The memory **504** stores information within the computing device **500**. In some implementations, the memory **504** is a volatile memory unit or units. In some implementations, the memory **504** is a non-volatile memory unit or units. The memory **504** may also be another form of computer-readable medium, such as a magnetic or optical disk.

[0057] The storage device **506** is capable of providing mass storage for the computing device **500**. In some implementations, the storage device **506** may be or contain a computer-readable medium, such as a floppy disk device, a hard disk device, an optical disk device, or a tape device, a flash memory or other similar solid state memory device, or an array of devices, including devices in a storage area network or other configurations. A computer program product can be tangibly embodied in an information carrier. The computer program product may also contain instructions that, when executed, perform one or more methods, such as those described above. The computer program product can also be tangibly embodied in a computer- or machine-readable medium, such as the memory **504**, the storage device **506**, or memory on the processor **502**.

[0058] The high-speed interface **508** manages bandwidth-intensive operations for the computing device **500**, while the low-speed interface **512** manages lower bandwidth-intensive operations. Such allocation of functions is exemplary only. In some implementations, the high-speed interface **508** is coupled to the memory **504**, the display **516** (e.g., through a graphics processor or accelerator), and to the high-speed expansion ports **510**, which may accept various expansion cards (not shown). In the implementation, the low-speed interface **512** is coupled to the storage device **506** and the low-speed expansion port **514**. The low-speed expansion port **514**, which may include various communication ports (e.g., USB, Bluetooth, Ethernet, wireless Ethernet) may be coupled to one or more input/output devices, such as a keyboard, a pointing device, a scanner, or a networking device such as a switch or router, e.g., through a network adapter.

[0059] The computing device **500** may be implemented in a number of different forms, as shown in the figure. For example, it may be implemented as a standard server **520**, or multiple times in a group of such servers. In addition, it may be implemented in a personal computer such as a laptop computer **522**. It may also be implemented as part of a rack server system **524**. Alternatively, components from the computing device **500** may be combined with other components in a mobile device (not shown), such as a mobile computing device **550**. Each of such devices may contain one or more of the computing device **500** and the mobile computing device **550**, and an entire system may be made up of multiple computing devices communicating with each other.

[0060] The mobile computing device **550** includes a processor **552**, a memory **564**, an input/output device such as a display **554**, a communication interface **566**, and a transceiver **568**, among other components. The mobile computing device **550** may also be provided with a storage device, such as a micro-drive or other device, to provide additional storage. Each of the processor **552**, the memory **564**, the display **554**, the communication interface **566**, and the transceiver **568**, are interconnected using various buses, and several of the components may be mounted on a common motherboard or in other manners as appropriate.

[0061] The processor **552** can execute instructions within the mobile computing device **550**, including instructions stored in the memory **564**. The processor **552** may be implemented as a chipset of chips that include separate and multiple analog and digital processors. The processor **552** may provide, for example, for coordination of the other components of the mobile computing device **550**, such as control of user interfaces, applications run by the mobile computing device **550**, and wireless communication by the mobile computing device **550**.

[0062] The processor **552** may communicate with a user through a control interface **558** and a display interface **556** coupled to the display **554**. The display **554** may be, for example, a TFT (Thin-Film-Transistor Liquid Crystal Display) display or an OLED (Organic Light Emitting Diode) display, or other appropriate display technology. The display interface **556** may comprise appropriate circuitry for driving the display **554** to present graphical and other information to a user. The control interface **558** may receive commands from a user and convert them for submission to the processor **552**. In addition, an external interface **562** may provide communication with the processor **552**, so as to enable near area communication of the mobile computing device **550** with other devices. The external interface **562** may provide, for example, for wired communication in some implementations, or for wireless communication in other implementations, and multiple interfaces may also be used.

[0063] The memory **564** stores information within the mobile computing device **550**. The memory **564** can be implemented as one or more of a computer-readable medium or media, a volatile memory unit or units, or a non-volatile memory unit or units. An expansion memory **574** may also be provided and connected to the mobile computing device **550** through an expansion interface **572**, which may include, for example, a SIMM (Single In Line Memory Module) card interface. The expansion memory **574** may provide extra storage space for the mobile computing device **550**, or may also store applications or other information for the mobile computing device **550**. Specifically, the expansion memory **574** may include instructions to carry out or supplement the processes described above, and may include secure information also. Thus, for example, the expansion memory **574** may be provide as a security module for the mobile computing device **550**, and may be programmed with instructions that permit secure use of the mobile computing device **550**. In addition, secure applications may be provided via the SIMM cards, along with additional information, such as placing identifying information on the SIMM card in a non-hackable manner.

[0064] The memory may include, for example, flash memory and/or NVRAM memory (non-volatile random access memory), as discussed below. In some implementations, a computer program product is tangibly embodied in an information carrier. The computer program product contains instructions that, when executed, perform one or more methods, such as those described above. The computer program product can be a computer- or machine-readable medium, such as the memory **564**, the expansion memory **574**, or memory on the processor **552**. In some implementations, the

computer program product can be received in a propagated signal, for example, over the transceiver **568** or the external interface **562**.

[0065] The mobile computing device **550** may communicate wirelessly through the communication interface **566**, which may include digital signal processing circuitry where necessary. The communication interface **566** may provide for communications under various modes or protocols, such as GSM voice calls (Global System for Mobile communications), SMS (Short Message Service), EMS (Enhanced Messaging Service), or MMS messaging (Multimedia Messaging Service), CDMA (code division multiple access), TDMA (time division multiple access), PDC (Personal Digital Cellular), WCDMA (Wideband Code Division Multiple Access), CDMA2000, or GPRS (General Packet Radio Service), among others. Such communication may occur, for example, through the transceiver **568** using a radio-frequency. In addition, short-range communication may occur, such as using a Bluetooth, WiFi, or other such transceiver (not shown). In addition, a GPS (Global Positioning System) receiver module **570** may provide additional navigation- and location-related wireless data to the mobile computing device **550**, which may be used as appropriate by applications running on the mobile computing device **550**.

[0066] The mobile computing device **550** may also communicate audibly using an audio codec **560**, which may receive spoken information from a user and convert it to usable digital information. The audio codec **560** may likewise generate audible sound for a user, such as through a speaker, e.g., in a handset of the mobile computing device **550**. Such sound may include sound from voice telephone calls, may include recorded sound (e.g., voice messages, music files, etc.) and may also include sound generated by applications operating on the mobile computing device **550**.

[0067] The mobile computing device **550** may be implemented in a number of different forms, as shown in the figure. For example, it may be implemented as a cellular telephone **580**. It may also be implemented as part of a smart-phone **582**, personal digital assistant, or other similar mobile device.

[0068] Various implementations of the systems and techniques described here can be realized in digital electronic circuitry, integrated circuitry, specially designed ASICs (application specific integrated circuits), computer hardware, firmware, software, and/or combinations thereof. These various implementations can include implementation in one or more computer programs that are executable and/or interpretable on a programmable system including at least one programmable processor, which may be special or general purpose, coupled to receive data and instructions from, and to transmit data and instructions to, a storage system, at least one input device, and at least one output device.

[0069] These computer programs (also known as programs, software, software applications or code) include machine instructions for a programmable processor, and can be implemented in a high-level procedural and/or object-oriented programming language, and/or in assembly/machine language. As used herein, the terms machine-readable medium and computer-readable medium refer to any computer program product, apparatus and/or device (e.g., magnetic discs, optical disks, memory, Programmable Logic Devices (PLDs)) used to provide machine instructions and/or data to a programmable processor, including a machine-readable medium that receives machine instructions as a machine-readable signal. The term machine-readable signal refers to any signal used to provide machine instructions and/or data to a programmable processor.

[0070] To provide for interaction with a user, the systems and techniques described here can be implemented on a computer having a display device (e.g., a CRT (cathode ray tube) or LCD (liquid crystal display) monitor) for displaying information to the user and a keyboard and a pointing device (e.g., a mouse or a trackball) by which the user can provide input to the computer. Other kinds of devices can be used to provide for interaction with a user as well; for example, feedback provided to the user can be any form of sensory feedback (e.g., visual feedback, auditory feedback, or tactile feedback); and input from the user can be received in any form, including acoustic, speech, or tactile input.

[0071] The systems and techniques described here can be implemented in a computing system that includes a back end component (e.g., as a data server), or that includes a middleware component (e.g., an application server), or that includes a front end component (e.g., a client computer having a graphical user interface or a Web browser through which a user can interact with an implementation of the systems and techniques described here), or any combination of such back end, middleware, or front end components. The components of the system can be interconnected by any form or medium of digital data communication (e.g., a communication network). Examples of communication networks include a local area network (LAN), a wide area network (WAN), and the Internet.

[0072] The computing system can include clients and servers. A client and server are generally remote from each other and typically interact through a communication network. The relationship of client and server arises by virtue of computer programs running on the respective computers and having a client-server relationship to each other.

What is claimed is:

1. A method performed by data processing apparatus, the method comprising:

receiving, from a device within a network, a domain name service (DNS) request for an address of a first resource outside the network, the first resource being associated with a security policy of the network;

returning, to the device within the network in response the DNS request, a DNS response comprising an address of a gateway within the network, the gateway address having previously been associated with the first resource address;

establishing a first encrypted connection between the device and the gateway, and a second encrypted connection between the gateway and the first resource, to facilitate encrypted communication traffic between the device and the first resource; and

decrypting and inspecting at least some of the encrypted communication traffic passing between the device and the first resource.

2. The method of claim **1**, wherein the address of the first resource is determined by the gateway based on the address of the first resource.

3. The method of claim **1**, wherein decrypting and inspecting the encrypted communication traffic includes blocking the encrypted communication traffic.

4. The method of claim **1**, the method further comprising selecting the gateway from a plurality of available devices within the network.

5. The method of claim **4**, wherein the gateway is selected based on a comparison of the first resource with a rule defining destinations associated with encrypted communication traffic.

6. The method of claim **4**, wherein the gateway is selected based on hardware performance.

7. The method of claim **1**, the method further comprising:

receiving, from a second device within the network, a second domain name service (DNS) request for an address of a third resource outside the network;

sending, to the DNS, the second DNS request;

receiving, from the DNS, a DNS response;

returning, to the second device within the network and in response to receiving the second DNS request, the second DNS request; and

establishing a third encrypted connection between the second device and the third resource, to facilitate encrypted communication traffic between the second device and the third resource.

8. A non-transitory computer storage media encoded with computer program instructions that, when executed by one or more processors, cause a computer device to perform operations comprising:

receiving, from a device within a network, a domain name service (DNS) request for an address of a first resource outside the network, the first resource being associated with a security policy of the network;

returning, to the device within the network in response the DNS request, a DNS response comprising an address of a gateway within the network, the gateway address having previously been associated with the first resource address;

establishing a first encrypted connection between the device and the gateway, and a second encrypted connection between the gateway and the first resource, to facilitate encrypted communication traffic between the device and the first resource; and

decrypting and inspecting at least some of the encrypted communication traffic passing between the device and the first resource.

9. The computer storage media of claim **8**, wherein the address of the first resource is determined by the gateway based on the address of the first resource.

10. The computer storage media of claim **8**, wherein decrypting and inspecting the encrypted communication traffic includes blocking the encrypted communication traffic.

11. The computer storage media of claim **8**, wherein the operations further comprise selecting the gateway from a plurality of available devices within the network.

12. The computer storage media of claim **11**, wherein the gateway is selected based on a comparison of the first resource with a rule defining destinations associated with encrypted communication traffic.

13. The computer storage media of claim **11**, wherein the gateway is selected based on hardware performance.

14. The computer storage media of claim **8**, wherein the operations further comprise:

receiving, from a second device within the network, a second domain name service (DNS) request for an address of a third resource outside the network;

sending, to the DNS, the second DNS request;

receiving, from the DNS, a DNS response;

returning, to the second device within the network and in response to receiving the second DNS request, the second DNS request; and

establishing a third encrypted connection between the second device and the third resource, to facilitate encrypted communication traffic between the second device and the third resource.

15. A system comprising:

one or more processors configured to execute computer program instructions; and

non-transitory computer storage media encoded with computer program instructions that, when executed by one or more processors, cause a computer device to perform operations comprising:

receiving, from a device within a network, a domain name service (DNS) request for an address of a first resource outside the network, the first resource being associated with a security policy of the network;

returning, to the device within the network in response the DNS request, a DNS response comprising an address of a gateway within the network, the gateway address having previously been associated with the first resource address;

establishing a first encrypted connection between the device and the gateway, and a second encrypted connection between the gateway and the first resource, to facilitate encrypted communication traffic between the device and the first resource; and

decrypting and inspecting at least some of the encrypted communication traffic passing between the device and the first resource.

16. The system of claim **15**, wherein the address of the first resource is determined by the gateway based on the address of the first resource.

17. The system of claim **15**, wherein decrypting and inspecting the encrypted communication traffic includes blocking the encrypted communication traffic.

18. The system of claim **15**, wherein the operations further comprise selecting the gateway from a plurality of available devices within the network.

19. The system of claim **18**, wherein the gateway is selected based on a comparison of the first resource with a rule defining destinations associated with encrypted communication traffic.

20. The system of claim **18**, wherein the gateway is selected based on hardware performance.

21. The system of claim **15**, wherein the operations further comprise:

receiving, from a second device within the network, a second domain name service (DNS) request for an address of a third resource outside the network;

sending, to the DNS, the second DNS request;

receiving, from the DNS, a DNS response;

returning, to the second device within the network and in response to receiving the second DNS request, the second DNS request; and

establishing a third encrypted connection between the second device and the third resource, to facilitate encrypted communication traffic between the second device and the third resource.

* * * * *