Trials@uspto.gov
571-272-7822

Paper 11
Date: January 11, 2023

UNITED STATES PATENT AND TRADEMARK OFFICE

BEFORE THE PATENT TRIAL AND APPEAL BOARD

MERIDIAN WILDLIFE SERVICES LLC,
Petitioner,

v.

SAFE HAVEN WILDLIFE REMOVAL AND PROPERTY MANAGEMENT EXPERTS LLC,
Patent Owner.

IPR2022-01253
Patent 10,251,374 B2

Before NEIL T. POWELL, MICHAEL L. WOODS, and AMEE A. SHAH, *Administrative Patent Judges*.

WOODS, *Administrative Patent Judge*.

DECISION
Denying Institution of *Inter Partes* Review
35 U.S.C. § 314

I. INTRODUCTION

Petitioner, Meridian Wildlife Services LLC, filed a Petition for *inter partes* review of claims 1–16 (the "Challenged Claims") of U.S. Patent No. 10,251,374 B2 (Ex. 1001, "the '374 patent"). Paper 1, ("Pet."). Patent Owner, Safe Haven Wildlife Removal and Property Management Experts LLC, filed a Preliminary Response (Paper 8, "Prelim. Resp."). With our permission, Petitioner filed a Reply to the Preliminary Response (Paper 9, "Reply") and Patent Owner filed a Sur-Reply to the Reply (Paper 10, "Sur-Reply").

Under 35 U.S.C. § 314 and 37 C.F.R. § 42.4(a), we have authority to institute an *inter partes* review if "the information presented in the petition . . . and any response . . . shows that there is a reasonable likelihood that the petitioner would prevail with respect to at least 1 of the claims challenged in the petition." 35 U.S.C. § 314(a). Upon consideration of the evidence and arguments in the Petition (including its supporting testimonial evidence) as well as the evidence and arguments in the Preliminary Response, for the reasons below, we determine that the Petition fails to show a reasonable likelihood that Petitioner would prevail with respect to any of the challenged claims. We thus deny institution of *inter partes* review.

II. BACKGROUND

A. Real Parties-in-Interest

The parties identify themselves as the only real parties-in-interest. Pet. 73; Paper 6, 1.

B. Related Matters

Petitioner identifies related patents US 10,729,108 (the "'108 patent") and US 11,064,683 (the "'683 patent"), related US patent application number 17/352,524, and a contemporaneously-filed petition in IPR2022-01254 challenging the '108 patent. Pet. 73. Petitioner also filed a petition challenging the '683 patent in IPR2022-01340.

The parties also identify one district court proceeding relating to the '374 patent: *Safe Haven Wildlife Removal and Property Management Experts, LLC, v. Meridian Wildlife Services, LLC,* Case No. 7:21-cv-00577 (W.D. Va.). Paper 6, 1; Pet. 73.

C. Overview of the '374 Patent

The '374 patent is titled "Animal Relocation System and Method." Ex. 1001, code (54). The '374 patent describes, "[a]n animal relocation system and method comprising a perimeter net system a trapping net system, and a flushing device, wherein the flushing device channels the animal through the perimeter net system and into the trapping net." *Id.* at code (57). To illustrate, we reproduce Figure 2 of the '374 patent, below:

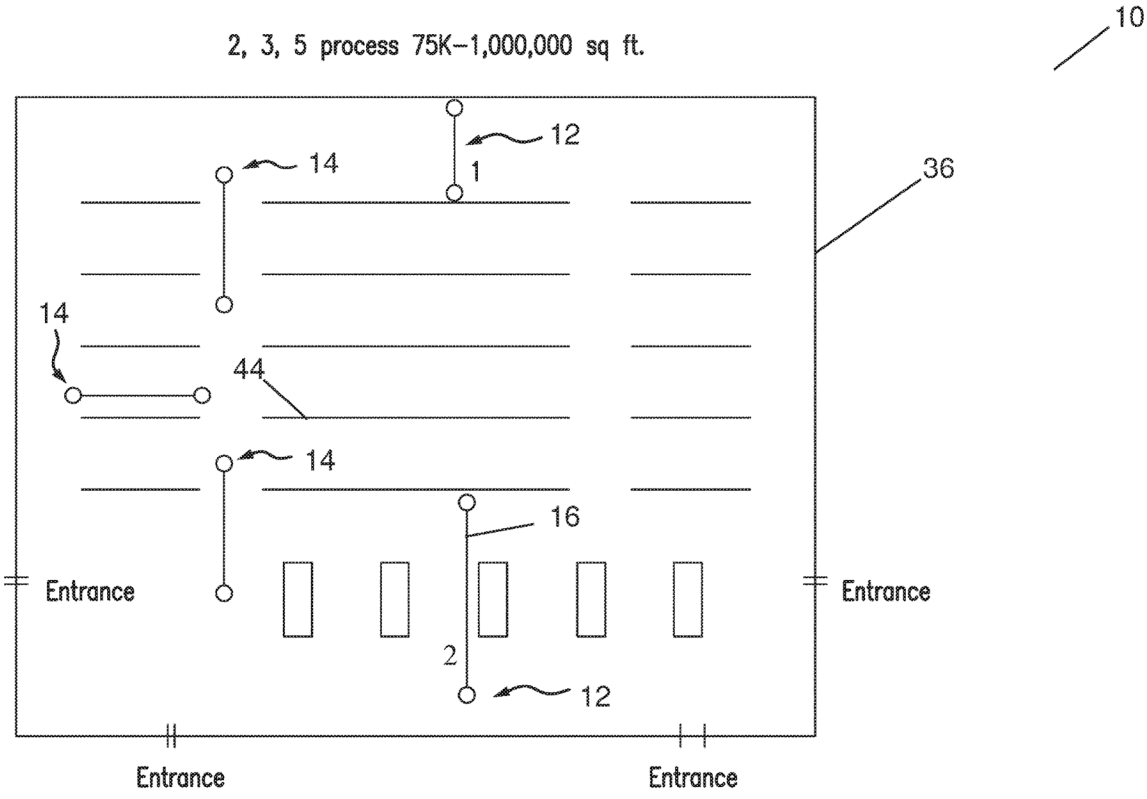

FIG. 2

Figure 2 "is a layout of an enclosure employing the preferred net setup." *Id.* at 3:46–47. In particular, Figure 2 depicts enclosure 36 with perimeter net system 12 "set up around the perimeter of the enclosure." *Id.* at 4:18–20. Trapping net system 14 within the interior of enclosure 36 reduces the space that an animal can traverse while the capture attempt is occurring. *Id.* at 4:21–23. The particular arrangement illustrated in Figure 2 depicts a "2:3:5" system as it preferably uses *two* perimeter nets 12, *three* trapping nets 14, thereby resulting in *five* nets total. *See id.* at 4:23–28.

We also reproduce Figure 4 of the '374 patent, below:

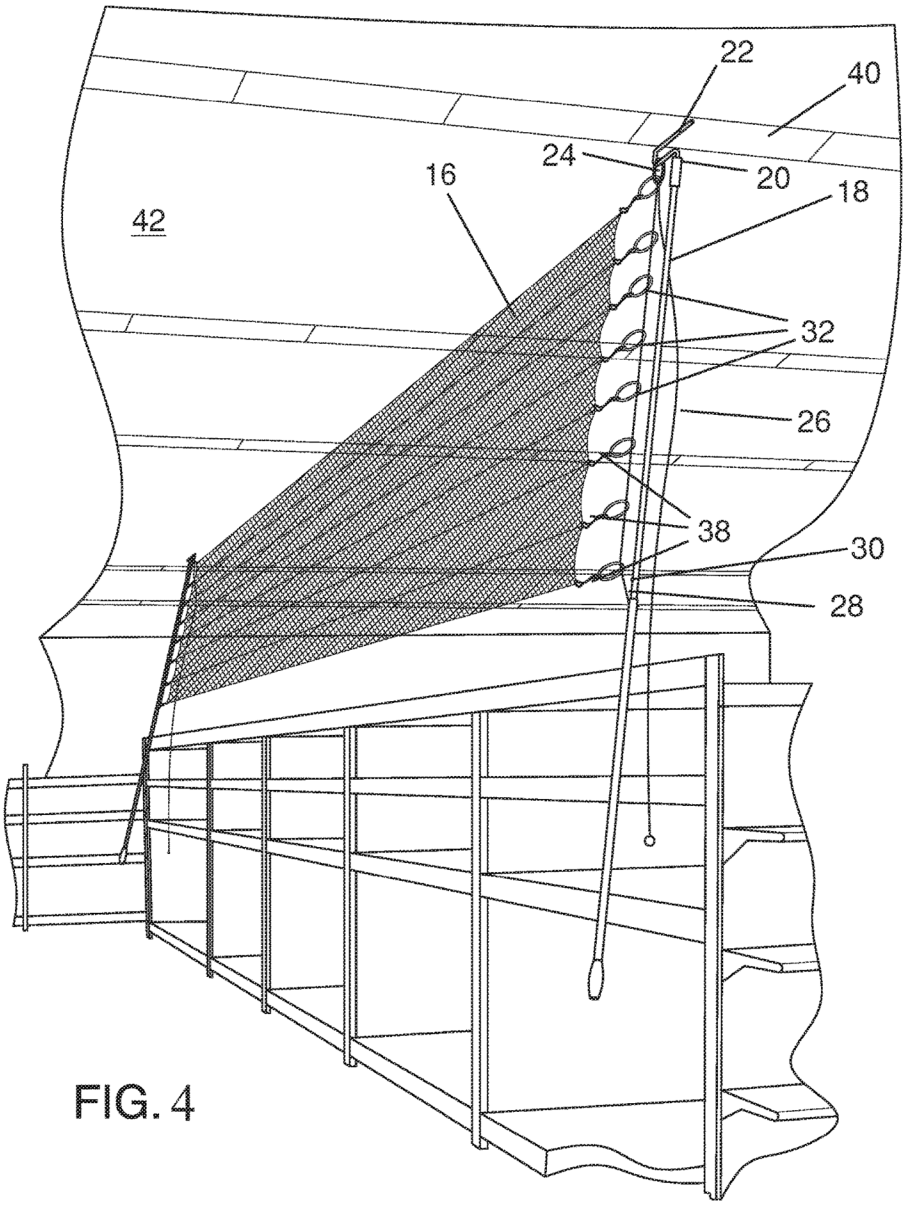

FIG. 4

Figure 4 "is a perspective view of one of the nets used in the system." *Id.* at 3:48–49. In particular, Figure 4 depicts net 16, telescoping pole 18, and rope and pulley system 30 from perimeter net system 12 or trapping net system 14. *Id.* at 4:48–50. Removable connector 24 and connectors 32 are preferably carabiners that provide for easy removal and installation of net 16. *Id.* at 4:51–54. Net 16 has at least one fastener 38 for connecting net 16 to rope 26 of rope and pulley system 30. *Id.* at 4:53–55. Net 16 may be

hung from hanging member 40 or any other part of ceiling 42 via hook 22. *See id.* at 4:55–58.

We further illustrate Figure 7 of the '374 patent, below:

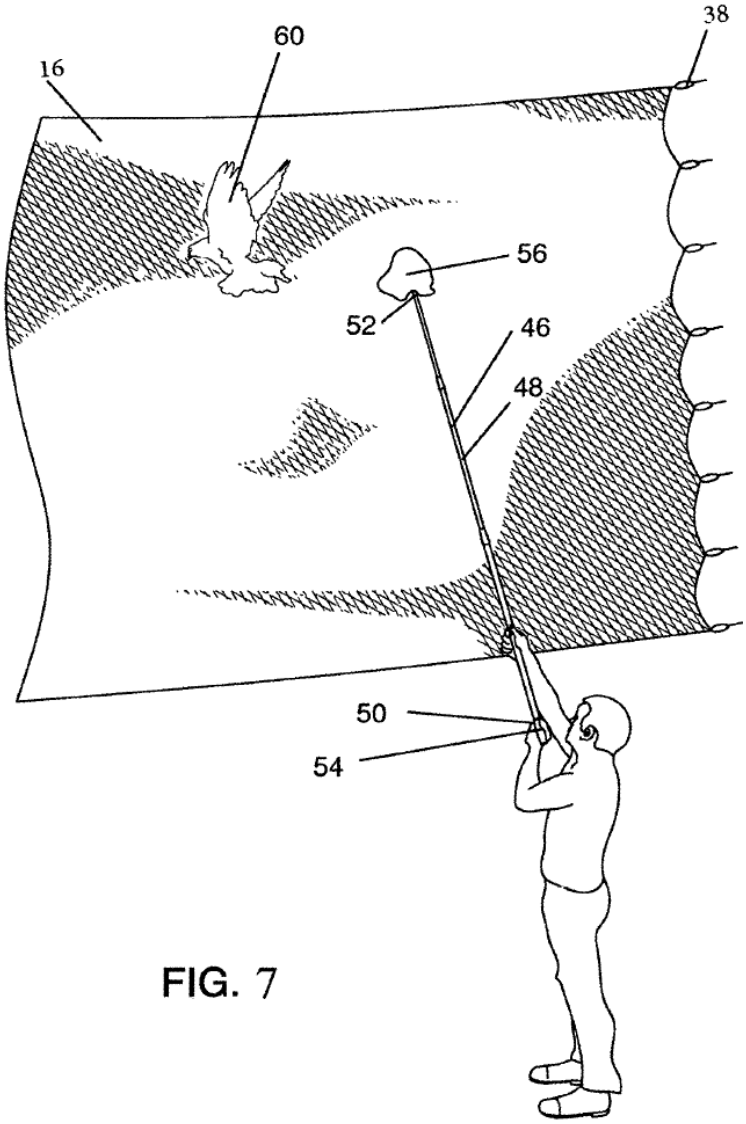

FIG. 7

Figure 7 "is a perspective view of a net as used in the system trapping an animal within an enclosure." *Id.* at 3:53–54. Specifically, Figure 7 depicts system 10 in which animal 60 is driven into net 16 by a handler using flushing device 46. *Id.* at 5:8–10.

D. Challenged Claims

Petitioner challenges claims 1–16 of the '374 patent. Pet. 1. Claims 1, 6, and 13 are independent. Ex. 1001, 5:29–7:24. We reproduce claim 6, below:

> 6. An animal relocation system for relocating an animal in a structure, the system comprising
>
> a perimeter net;
>
> a trapping net wherein the trapping net comprises a first trapping net, a second trapping net, and a third trapping net; and
>
> a flushing device, wherein the flushing device is used to direct the animal into the trapping net.

Id. at 6:45–52.

E. Asserted Grounds of Unpatentability

Petitioner asserts that the Challenged Claims are unpatentable based on the following grounds (Pet. 1):

Ground	Claims Challenged	35 U.S.C. §	References
A	6–14	103	Brugh[1]
B	1–16	103	Brugh, Kunz[2]
C	1–16	103	Bird Barrier Video,[3][4] Kunz

[1] Brugh, U.S. Patent Application Publication No. 2017/0238524, published Aug. 24, 2017 (Ex. 1008, "Brugh"), issued as US Patent No. 9,943,073 B2 on Apr. 17, 2018.
[2] Ecological and Behavioral Method for the Study of Bats (Thomas H. Kunz, 1998). Ex. 1010 ("Kunz").
[3] Bird Barrier, *Mist Kit Assembly and Use*, YouTube (Aug. 19, 2014). Ex. 1009 ("Video" or the "Bird Barrier Video").
[4] Petitioner also submits a transcript of the Bird Barrier Video (Ex. 1014), a screenshot of a webpage advertising Bird Barrier "mist nets" (Ex. 1011), and a "Bird Barrier Product Catalog 2013" (Ex. 1015).

Petitioner also relies on the Declaration of Mr. Michael J. Chamberlain (Ex. 1004). *See, e.g.*, Pet. 6 ("As confirmed by Petitioner's expert, Dr. Chamberlain . . . .").

III. ANALYSIS

A. Discretion Under 35 U.S.C. §§ 314(a) and 325(d)

Patent Owner argues that we should exercise discretion under 35 U.S.C. § 314(a) and deny institution under *Fintiv*. *See* Prelim. Resp. 25–26; *see also Apple Inc. v. Fintiv, Inc.*, IPR2020-00019, Paper 11 (PTAB Mar. 20, 2020) (precedential)).[5]

Patent Owner also argues that we should exercise our discretion under 35 U.S.C. § 325(d) and deny institution based on prior prosecution of the '374 patent. *See* Prelim. Resp. 23–25.

As explained in this Decision, we decline to institute review based on the *merits* of Petitioner's challenges. Accordingly, we need not and do not determine whether it would be appropriate to discretionarily deny institution under § 314(a) or § 325(d).

B. Level of Ordinary Skill in the Art

Petitioner contends that a person of ordinary skill in the art at the time of the invention ("POSITA," "POSA," or "skilled artisan") "would have had (i) at least a bachelor's degree in the study of wildlife management or

[5] At the time this Decision was in the final stages of panel review, the parties e-mailed the Board informing the Board that Patent Owner withdrew its argument under *Fintiv*. *See* Ex. 3001. We need not and do not address, however, whether this e-mail effectuated withdrawal of Patent Owner's *Fintiv* argument.

wildlife ecology and (ii) two or more years of field experience *trapping flying animals*." Pet. 6 (citing Ex. 1004 ¶ 25) (emphasis replaced).

Patent Owner submits that "[c]apturing animals in netting systems is a niche skill that is not taught in most wildlife management or ecology programs . . . [and that a POSITA] is one who has at least 2 years working with *animal capture net systems*." Prelim. Resp. 15 (citing Ex. 2001 ¶ 9) (emphasis added).

We decline to adopt either party's proposed definition.

We are not persuaded by Petitioner's definition that a skilled artisan who lacked a formal bachelor's degree would fail to qualify as a POSITA if that artisan had several years of experience trapping flying animals. *See* Pet. 6. Further, we are not persuaded by Patent Owner's definition that a skilled artisan with an advanced degree in wildlife management would fail to qualify as a POSITA simply because his or her experience fell short of "2 years working with animal capture net systems." *See* Prelim. Resp. 6–7.

For purposes of this Decision, we adopt a hybrid of Petitioner's and Patent Owner's proposed definition of a POSITA. We find that a POSITA would have had at least *either* (i) at least a bachelor's degree in the study of wildlife management or wildlife ecology *or* (ii) two or more years of field experience trapping flying animals. We find that this level of ordinary skill in the art is consistent with the '374 patent and the asserted prior art. *See Okajima v. Bourdeau*, 261 F.3d 1350, 1355 (Fed. Cir. 2001).

C. Claim Construction

In this *inter partes* review, we apply the same claim construction standard that would be used in a civil action under 35 U.S.C. § 282(b). 37 C.F.R. § 42.100(b). In applying this standard, we generally give claim

terms their ordinary and customary meaning as would be understood by a person of ordinary skill in the art at the time of the invention and in the context of the entire patent disclosure. *See id.*; *Phillips v. AWH Corp.*, 415 F.3d 1303, 1312–14 (Fed. Cir. 2005) (en banc).

Petitioner proposes construction for the terms "perimeter net," "trapping net," "flushing device," and "flusher." *See* Pet. 7–10. Patent Owner does not dispute Petitioner's construction of "flushing device" or "flusher" (*see* Prelim. Resp. 23), but disagrees with Petitioner's interpretation of "perimeter net" and "trapping net" (*see* Prelim. Resp. 16–22). We determine those disputed terms below.

1. "perimeter net" and "trapping net"

Petitioner submits that the '374 patent "identifies no structural difference between the 'perimeter net' and 'trapping net'," and that the use of the terms "trapping" and "perimeter" "refer to the *intended uses* of the recited nets." Pet. 7 (citing Ex. 1001, 3:62–65, 4:9–14) (emphasis added). Petitioner cites to the Specification and contends that the "perimeter net" is only "preferably . . . set up around the perimeter.'" *Id.* at 8 (citing Ex. 1001, 4:18–20).

Petitioner proposes that the term "perimeter net" "should not be interpreted as requiring the net to be installed in a particular location." Pet. 8. Petitioner cites to dependent claims 2 and 3 *of the '108 patent*, which "further require that one side of the perimeter net is 'proximal' or 'in contact with' one side of the structure, respectively.'" *Id.* (citing Ex. 1002, 5:53–58).

Based on this, Petitioner submits that the term "perimeter net" is simply a "net capable of being installed along the perimeter of an enclosure"

while the term "trapping net" is "a net capable of trapping an animal." *Id.* at 9 (citing Ex. Ex. 1004 ¶¶ 50–57).

Patent Owner responds that "adopting Petitioner's argument would vitiate the words 'perimeter' and 'trapping' altogether." Prelim. Resp. 17. Patent Owner submits that "the plain and ordinary meaning of 'perimeter' ('a line or strip bounding or protecting an area') is inconsistent with the notion that 'perimeter nets' need not be located at the perimeter of the structure." *Id.* Patent Owner further cites to the Specification and submits that perimeter nets "are located at or proximate to the perimeter of the structure." *Id.* at 19 (citing Ex. 1001, Figs. 2, 3).

Based on the Specification and the plain and ordinary meaning of the claim language, Patent Owner proposes that the term "perimeter net" is "a net that is located at or proximate to the perimeter of the enclosure," while "trapping net" is "a net that is located further to the interior of the enclosure than the perimeter net so as to reduce the space the animal can traverse while the capture attempt is occurring." Prelim. Resp. 22 (citing Ex. 2001 ¶ 45).

We agree with Patent Owner's proposed construction of "perimeter net" and Petitioner's proposed construction of "trapping net."

To illustrate, we first reproduce Figure 2 of the '374 patent, below:

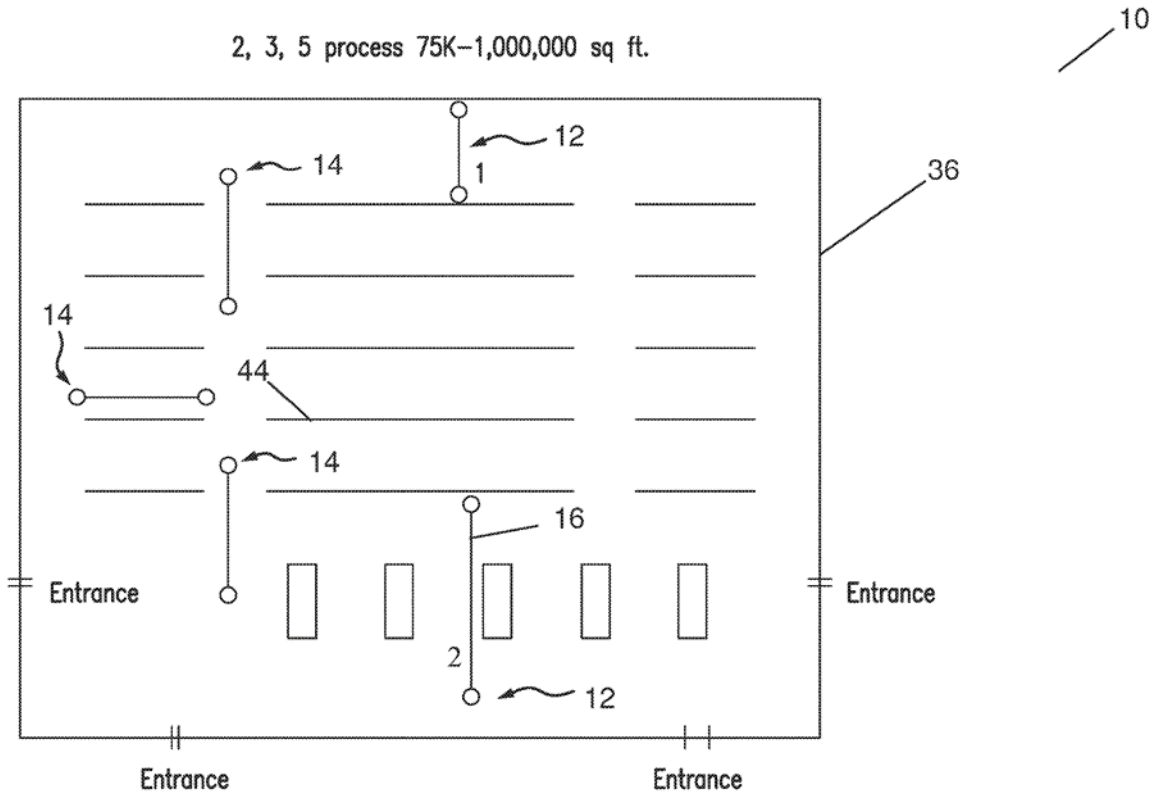

FIG. 2

As explained above (*see supra* § II.C), Figure 2 "is a layout of an enclosure employing the preferred net setup." *Id.* at 3:46–47. In particular, this figure depicts two perimeter nets 12, and three trapping nets 14. *See id.* at 4:23–28. Figure 2 depicts perimeter nets 12 as "set up around the perimeter of the enclosure 36." *Id.* at 4:19–20. We further note that of the three "trapping nets" 14 shown, the net on the left is located proximate to the perimeter, while two trapping nets 14 on the right are not.

Although the '374 patent describes that the "perimeter net" is only "preferably . . . set up around the perimeter of the enclosure," (*id.*), the term "perimeter" qualifies the term "net" and connotes structure, namely, the location of the "net" in relation to the "enclosed building" (independent claim 1) or the "structure" (independent claims 6, 13). In other words, "perimeter" is a meaningful modifier for the location of the net as being at or

proximate to the perimeter of the "enclosed building" or "structure." Regardless of Petitioner's proposal that the term need only be "capable of being installed along the perimeter of an enclosure" (Pet. 9), we note that Petitioner appears to adopt Patent Owner's proposed construction in its challenges. *See, e.g.*, Pet. 16 ("Petitioner notes that a POSA would have found it obvious to install [] one of Brugh's capture devices along a perimeter wall within a building."). Thus, we agree with Patent Owner and determine that the term "perimeter net" is a net located at or proximate to the perimeter.

As to "trapping net," the '374 patent describes a trapping net system 14 comprising at least one net 16 that traps an animal. *See, e.g.*, Ex. 1001, 3:62–63. The '374 patent describes that "[t]he trapping net system 14 on the interior of the enclosure 36 . . . reduce[s] the space the animal 60 can traverse while the capture attempt is occurring." *Id.* at 4:21–23. Unlike the term "perimeter," the term "trapping" does not have a locational relationship between the net and the enclosure but a relationship between the net and its use, i.e., for trapping. Thus, we agree with Petitioner that the term "trapping net" is simply a net capable of being used to trap an animal. Pet. 9. For clarity, the "trapping net" may, but not necessarily, be located at or proximate to the perimeter of a structure or enclosed building. Notably, Figure 2 of the '374 patent depicts one "trapping net" located proximate to the perimeter and two "trapping nets" located distal from the perimeter.

2. Other Claim Terms

For purposes of this Decision, we need not formally construe any other claim term, including "flushing device" and "flusher." *See Nidec Motor Corp. v. Zhongshan Broad Ocean Motor Co.*, 868 F.3d 1013, 1017 (Fed. Cir. 2017) (stating that "we need only construe terms 'that are in

controversy, and only to the extent necessary to resolve the controversy'" (quoting Vi*vid Techs., Inc. v. Am. Sci. & Eng'g, Inc.*, 200 F.3d 795, 803 (Fed. Cir. 1999))).

D. Legal Standards

Petitioner's challenges are based under 35 U.S.C. § 103. Pet. 11.

Under this section,

> A patent for a claimed invention may not be obtained, notwithstanding that the claimed invention is not identically disclosed as set forth in section 102, if the differences between the claimed invention and the prior art are such that the claimed invention as a whole would have been obvious before the effective filing date of the claimed invention to a person having ordinary skill in the art to which the claimed invention pertains. Patentability shall not be negated by the manner in which the invention was made.

35 U.S.C. § 103.

The question of obviousness is resolved on the basis of underlying factual determinations, including (1) the scope and content of the prior art; (2) any differences between the claimed subject matter and the prior art; (3) the level of ordinary skill in the art; and (4) when in evidence, objective indicia of non-obviousness. *Graham v. John Deere Co.*, 383 U.S. 1, 17–18 (1966).

E. Ground A: Unpatentable Over Brugh

Petitioner challenges claims 6–14 as unpatentable under 35 U.S.C. § 103 over Brugh.

1. Brugh (Ex. 1008)

Brugh relates to a "bird capture net which allows the use of quickly adjusting the height for capture and release." Ex. 1008, code (57). Brugh proposes a system that "can be deployed, repositioned, and lowered for capture much quicker and easier than nets directly attached to the roof or rafters, thus allowing for a much higher chance of recovering the flying vertebrate without harm." *Id.* ¶ 7. Brugh's system is shown in Figure 1, reproduced below.

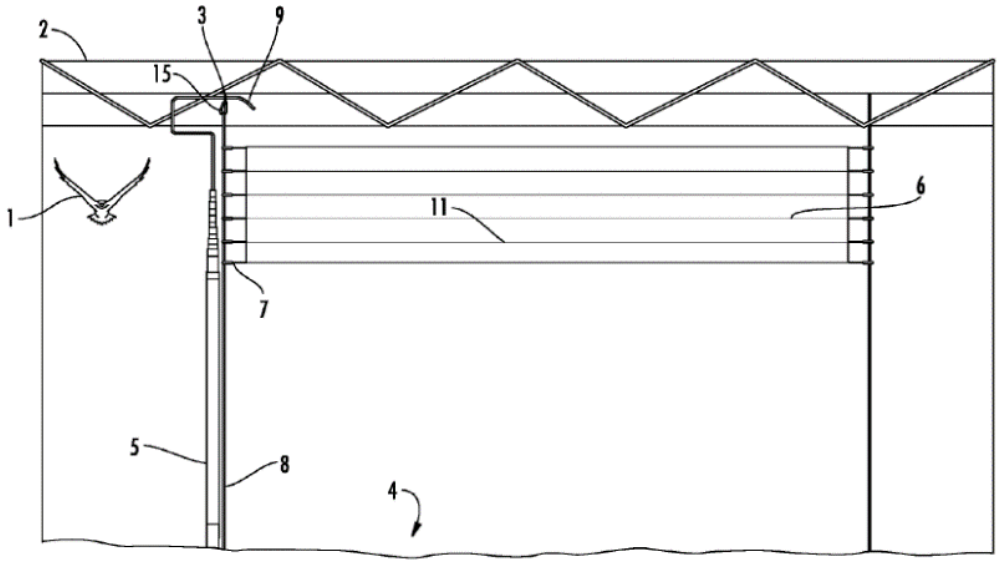

FIG. 1

Figure 1 shows bird 1 flying around ceiling 2 of a large warehouse building having rafters 3 with adjustable poles 5 in their extended position sitting on floor 4, capture net 6 mounted on height adjustable poles 5, such as telescoping poles, hook 9 attached to rafter 3, and rope 8 on each pole running through pulley 15 and lengthened to pull net 16 together to the desired tension. *Id.* ¶ 49.

The method for safe live capture of a flying vertebrate is shown in Figure 4, reproduced below.

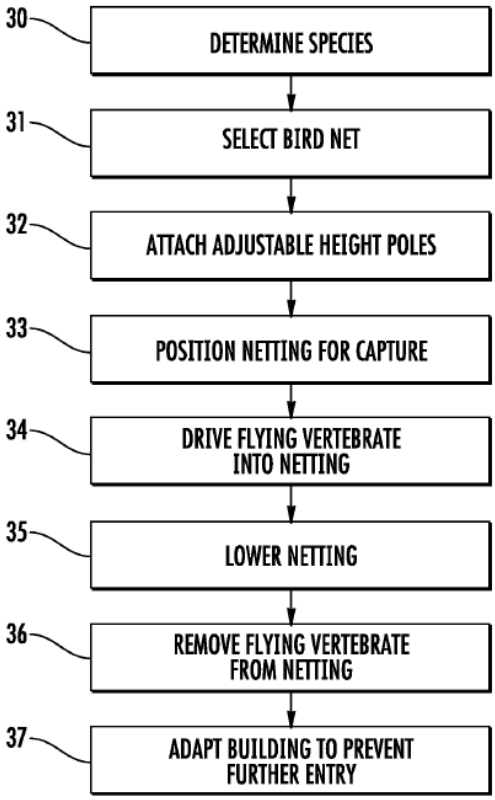

FIG. 4

Figure 4 depicts the steps of determining the species of the vertebrate by visual inspection of the vertebrate in the location and in the building (step 30), selecting a bird netting with pockets (step 31), attaching height adjustable poles to the netting (step 32), positioning the netting for capture (step 33) so the vertebrate can easily for, be chased into, or get stuck in one of the pockets (step 34), lowering the netting after capture (step 36) to remove the vertebrate from the netting (step 36) and release into the wild, and adapt the building to prevent the species from further entry such as by closing doors, using repellants, and eliminating attractants (step 37). *Id.* ¶ 52.

Brugh allows for those skilled in the art to make modifications. *Id.* ¶ 53.

2. Claim 6

Petitioner contends that independent claim 6 is unpatentable over Brugh. Pet. 13–18.

To address the recited "perimeter net" and three "trapping nets," Petitioner submits that "Brugh's capture device is both a perimeter net and a trapping net, and a POSA would have found it obvious to *provide four of Brugh's capture devices* as part of an animal relocation system (e.g., one perimeter net and three trapping nets)." *Id.* at 14. Petitioner further reasons,

> A POSA would have found it obvious to provide four of Brugh's capture devices for several reasons. Brugh discloses that flying vertebrates' "flight characteristics" within a building should be observed and that the observed "flight pattern can then be used to place the netting in relationship to the position of the flying vertebrate." . . . Given this teaching, a POSA would have found it obvious to provide four of Brugh's capture devices, for example, where **(i)** the flight pattern of a flying vertebrate (or multiple vertebrates) within a building includes (or is expected to include) four different locations or **(ii)** where four or more flying vertebrates are present (or expected to be present) in the building . . . . Additionally, a POSA would have understood that providing four or more of Brugh's capture devices would generally increase the likelihood of capturing flying vertebrates within the building.

Id. at 14–15 (citing Ex. 1008 ¶¶ 15, 45; 1004 ¶¶ 71, 72).

To address the location of the "perimeter net," Petitioner further reasons that "a POSA would have found it obvious to install (i) one of Brugh's capture devices *along a perimeter wall within a building* and (ii) three more of Brugh's capture devices in additional locations (e.g., around the building's interior)." *Id.* at 16 (citing Ex. 1004 ¶ 74) (emphasis replaced).

Patent Owner responds, *inter alia*, that "there is no teaching or suggestion in Brugh that there would be any advantage in positioning its single net '***at or proximate to a perimeter wall***.'" Prelim. Resp. 36. Patent Owner's expert (Mr. Tolley) testifies that "Brugh does not teach a POSA that there would be any advantage in positioning one or more nets along a perimeter wall." Ex. 2001 ¶ 51. Mr. Tolley acknowledges that Brugh teaches positioning nets "based on the species of flight and their flight characteristics," but explains that "there is no discussion at all about flight characteristics dictating placement of a net along the walls of an enclosure." *Id.*

Weighing the parties' arguments and evidence, Petitioner has not shown sufficiently that it would have been obvious to modify Brugh to arrive at a "perimeter net" located at or proximate to the perimeter. *See supra* § III.C.1 (construing "perimeter net").

Although we agree with Petitioner that modifying Brugh to have multiple nets would have been obvious to a skilled artisan, Petitioner has not provided adequate reasoning why that artisan would have positioned a net at or proximate to the perimeter of an enclosed building or structure. None of the references or exhibits cited teaches a net at or proximate to the perimeter and within a building, and the reasons proffered by Petitioner lack rational underpinning.

Petitioner's reason that a skilled artisan would have placed a net "along a perimeter wall . . . *in response to observing flight patterns in those locations*" is not supportable. Pet. 16–17 (citing Ex 1008 ¶¶ 15, 45; Ex. 1004 ¶ 75).

Dr. Chamberlain testifies that

> The location of the animal within the capture area as well as the ecological characteristics of the interested species encourages many practitioners to equip their netting systems with different features to better adapt their nets for effective deployment. For example, *it has been well-understood in the field of wildlife study that many species of birds and bats tend to roost at the forest canopy or at or near the ceiling of a building.*

Ex. 1004 ¶ 30 (citing Ex. 1010, 5; Ex. 1018, 81; Ex. 1026, 515; Ex. 1033, 200; Ex. 1036, 7) (emphasis added).

The evidence, however, does not support a finding that a flying animal would roost or fly along the perimeter of a wall within a building. For example, Tuttle (Ex. 1018), which Dr. Chamberlain cites to (Ex. 1004 ¶ 30), discloses that for bats that roost in buildings, the likely roosting sites are "[t]ile roofs, attics, and cavities between walls . . . and any place that is dark or dimly lit and protected from frequent disturbance" (Ex. 1018, 81). As persuasively argued by Patent Owner, Petitioner provides no evidence that bats or other flying animals are likely to fly or roost along *the inner perimeter of a structure* such that a POSITA would have found it obvious to place a net along the perimeter of a wall within a building. *See* Prelim Resp. 36–37 (citing Ex. 2001 ¶ 51) (emphasis added). Having weighed the parties' competing testimony, we credit Mr. Tolley's testimony that "Brugh does not teach a POSA that there would be any advantage of positioning one or more nets along a perimeter wall . . . [and that] there is no discussion at all about flight characteristics dictating placement of a net along the walls of an enclosure." Ex. 2001 ¶ 51.

Furthermore, Petitioner's reason that placing a net along a perimeter wall "would effectively shrink the area in which the vertebrate is able to fly and thereby improve the likelihood of capture" is based on impermissible

hindsight. Pet. 17 (citing Ex. 1004 ¶ 76); *see also* Ex. 1004 ¶ 76 (testifying that "flying vertebrate [would have] fewer escape routes along the perimeter.") Impermissible hindsight occurs when a person of ordinary skill in the art is imbued with knowledge taught *only* by the inventor of the challenged patent. *See W.L. Gore & Assocs., Inc. v. Garlock, Inc.*, 721 F.2d 1540, 1553 (Fed. Cir. 1983).

Upon reviewing the record, Petitioner relies on impermissible hindsight, as its reasoning stems *solely* from the '374 patent. *Id.* The '374 patent describes an advantage of its system that improves animal capture as "the space the animal could escape during an attempted capture is greatly lessened due to the arrangement of the perimeter net system and trapping net system." Ex. 1001, 3:5–9. The prior art cited by Petitioner, on the other hand, does not teach the placement of nets along the perimeter and within an enclosure for reducing escape routes, thereby improving the capturability of flying animals.

Further, although placing a net along a perimeter wall may reduce the paths, it does not necessarily reduce the area for the flying vertebrate to fly. Petitioner does not discuss how, precisely, the nets are oriented "along a perimeter wall" to reduce the area for flying. *See* Pet. 14–17. For example, "along the wall" may include one net parallel to and flush against the perimeter wall while another net lies far away and parallel to another wall. In such an example, we do not see how the area or the number of flight paths would be reduced, as the nets would not enclose the flying vertebrate and the likelihood of capture is not improved.

Furthermore, Petitioner's reason that "increased net density would result in increased capture rate" provides, at best, support that a skilled artisan would have found it obvious to have multiple nets, but does not

provide support for why that artisan would have located one of those nets at or proximate to a perimeter and within a building or structure. *See* Pet. 17 (citing Ex. 1004 ¶ 77). Dr. Chamberlain's testimony does not fill the gap within Petitioner's analysis. *See* Ex. 1004 ¶ 77. For example, Dr. Chamberlain's testimony cites to Ralph. *Id.* (citing in part Ex. 1039, 190). Ralph discloses placement of nets in an outdoor study area (Ex. 1039, 187, 190) and defines "net density" as "[t]he optimal distance between nets" (*id.* at 191). Ralph further discloses the number of and distance between nets outside based on various research questions (*id.* at 191), but does not discuss why placing a net at or proximate to a perimeter within a building would increase capture rate such that it would have been obvious for a skilled artisan to do so.

For the foregoing reasons, Petitioner has not demonstrated a reasonable likelihood of establishing obviousness of claim 6 based on Brugh.

3. Claims 7–14

Claims 7–12 depend from claim 6 and Petitioner relies on the same faulty reasoning for challenging the dependent claims as relied on its challenge of independent claim 6. *See* Pet. 18–24. Accordingly, Petitioner has not demonstrated a reasonable likelihood of establishing obviousness of claims 7–12 based on Brugh.

Independent claim 13 and its dependent claim 14 require a "perimeter net system comprising two nets." Ex. 1001, 7:6–19. To satisfy this limitation, Petitioner cites to the same insufficient reasoning relied upon in its challenge of claim 6. *See* Pet. 25 ("For the reasons discussed above with respect to claim 6 . . . a POSA would have found it obvious in view of Brugh to provide at least two perimeter nets"). For the same reasons discussed

above in relation to claim 6, Petitioner has not demonstrated a reasonable likelihood of establishing obviousness of claims 13 and 14.

4. Summary of Ground A

Petitioner has not demonstrated a reasonable likelihood of establishing obviousness of claims 6–14 based on Brugh.

F. Ground B: Unpatentable Over Brugh and Kunz

Petitioner also contends that claims 1–16 would have been obvious over Brugh and Kunz. Pet. 27–46.

1. Kunz (Ex. 1010)

Kunz is the first chapter of a book titled, "Ecological and Behavioral Methods for the Study of Bats." Ex. 1010. Chapter one is titled, "Capture Methods and Holding Devices" and Kunz discloses that "[m]ethods used and the success of capturing flying bats will depend mostly upon their flight speed and maneuverability, and the habitats being sampled." *Id.* at 1.[6]

> Methods used and the success of capturing bats in roosts will depend upon the type of roost, the number of bats present, the dispersion of bats within the roost, their physiological state (active vs. torpid), their age and reproductive condition (pregnant or lactating), their alertness to visual, auditory, or olfactory stimuli, and the location and accessibility of bats to the investigator.

Id.

Kunz's purported purpose is to "review methods used to capture bats that are applicable to ecological and behavioral research." *Id.* at 2.

[6] Our Decision cites to the native page numbers of Kunz and the other cited art.

One method is the use of hand nets with adjustable-length handles that "are most commonly used to capture roosting bats, they can also be used successfully to capture bats in flight as they depart from small openings in buildings and caves . . . and at predictable feeding sites." *Id.* at 4–5.

The most commonly used devices for capturing flying bats are mist nets, preferably with four shelves, a mesh size of 36 mm, and made of 50 or 70 denier/2 ply nylon, as they are "inexpensive, lightweight, compact, and easily transported and erected in the field." *Id.* at 6–7. Longer nets may require net poles in the middle. *Id.* at 6. Several short nets may be used in a stack or butted end-to-end configuration. *Id.*

"Mist nets may be deployed successfully at almost any site where bats are expected to fly." *Id.* at 8. "Strategies of net placement have a major influence on capture success," with the most successful sites being "near roosts, at water holes, and across trails that are used as flyways." *Id.* "Bats can be netted at openings to caves, mines, and buildings, where bats regularly exit and enter," as well as in attics. *Id.* at 8. Examples of methods of setting net poles for multiple nets are illustrated in Figures 3 and 4. *Id.* at 10. We reproduce Figure 3 of Kunz, below:

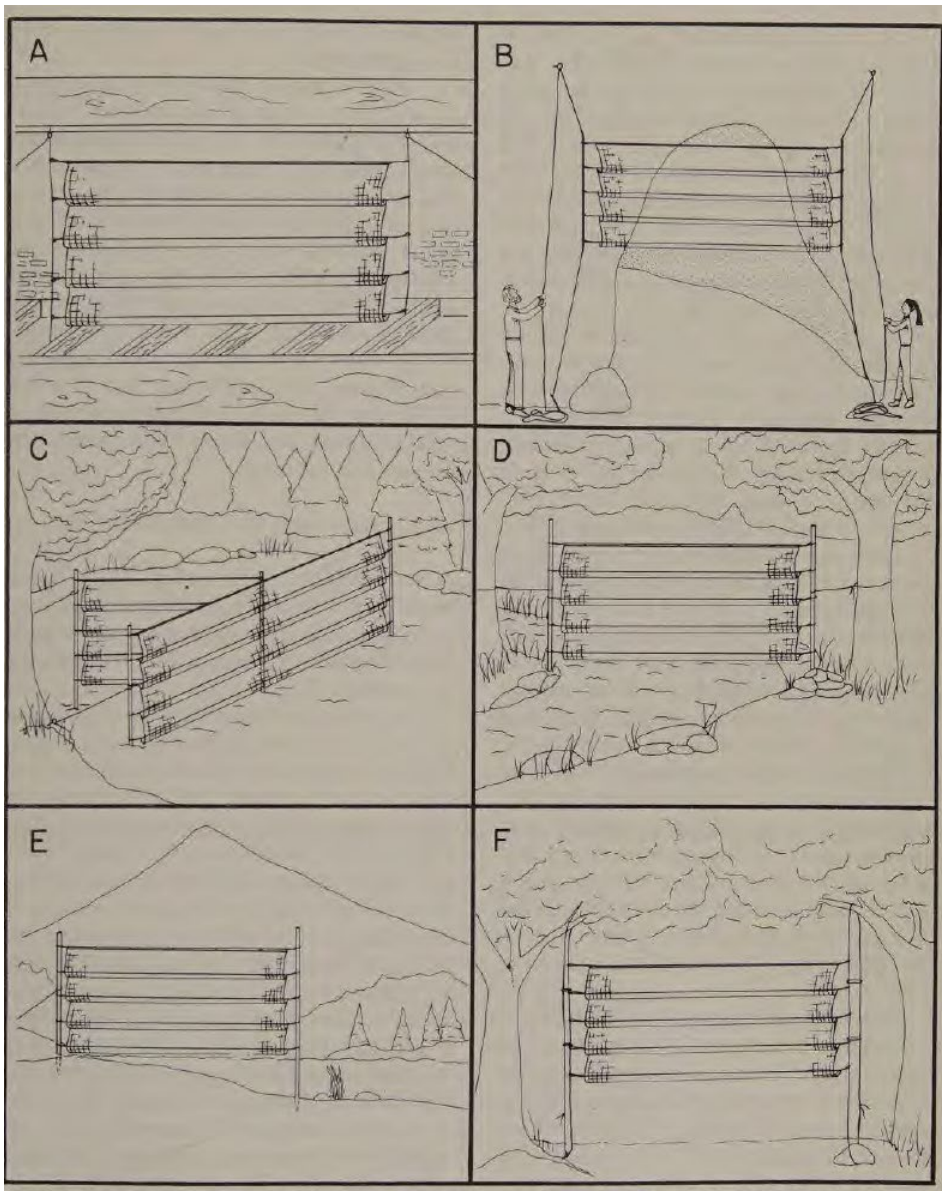

Figure 3 depicts placement and configuration of mist nets for capturing bats in an attic of a building (A), at a cave entrance (B), over a pond (C), over a stream (D), at the edge of a lake (E), and on a forest trail (F). *Id.* at 9.

We further reproduce Figure 4 of Kunz, below:

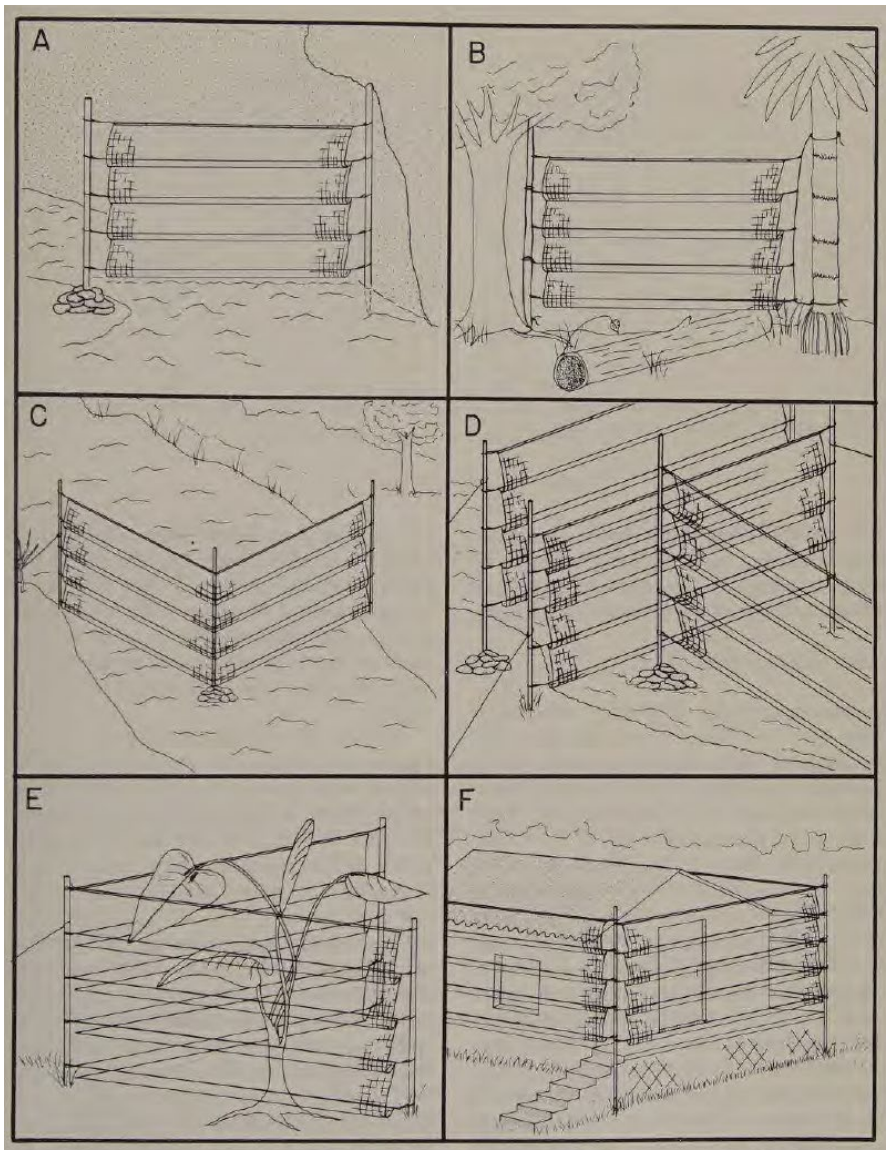

Figure 4 depicts multiple net configurations and alternative pole uses for setting mist nets to capture bats using large rocks and crevices in rock ledges to anchor the poles (A), using ropes as poles (B), using a V-net configuration of the nets with poles anchored in a soft substrate or with larger rocks (C), using a T-net configuration with a high net and a low net (D), as a foliage roost partially surrounding by a net (E), and partially surrounding a building by nets (E). *Id.* at 11.

Kunz discloses that using mist nets in a V-configuration or a combination of high and low nets in a T-configuration, as shown in Figure 4,

configurations C and D, is helpful in capturing bats as they avoid one net and then are captured in another. *Id.* at 10. "Often bats can be captured if the perimeters of roosts are either partially or completely surrounded by one or more nets (Fig. 4 E and F)." *Id.* Kunz further discusses canopy net systems including using poles to allow nets to be raised to considerable heights, such as a pole system that uses sailboat masts and a series of ropes and pulleys whereby each end of the net is attached to the mast. *Id.* at 15.

2. Claim 6

Petitioner submits that independent claim 6 is unpatentable over Brugh in view of Kunz "for at least the same reasons explained with respect to Brugh alone (Ground A)." Pet. 30.

Petitioner also submits that "Kunz would have further motivated a POSA to use a plurality of Brugh's capture devices—specifically, at least one 'perimeter net' and at least three 'trapping nets' as recited in elements [6a] and [6b]." *Id.* (citing Ex. 1004 ¶ 113). Petitioner cites to Kunz's teaching that mist nets should be deployed anywhere bats "are expected to fly" (*id.* (citing Ex. 1010, 8)) and that "the perimeters of roosts are either partially or completely surrounded by one or more nets" (*id.* at 31 (citing Ex. 1010, 10–11, Fig. 4). Petitioner reasons that

> In view of Kunz's teachings regarding the placement of multiple nets, a POSA would have found it obvious (and would have been motivated) to observe the flyways of flying vertebrates in a building and place multiple nets (e.g., at least one perimeter net and at least three trapping nets) within the building for the purpose of effectively capturing the identified flying vertebrates. . . . Moreover, although not required by Claim 6, a POSA would have found it further obvious in view of Kunz to specifically (i) install one of Brugh's capture devices along a perimeter wall within a building and (ii) three more of Brugh's capture devices in additional locations (e.g., around the

> interior of the building). In view of Kunz, installation of Brugh's capture device in this way (e.g., in response to observing flyways in these locations) would have predictably resulted in an effective capture system within the building. . . . Accordingly, elements [6a] and [6b] would have been obvious to a POSA in view of Brugh and Kunz.

Id. (citing Ex. 1004 ¶¶ 114, 115) (emphasis omitted).

Patent Owner responds that Kunz "discusses placing nets around the perimeter of a bat roost such that 'the perimeters of roosts are either partially or completely surrounded by one or more nets," which is "contrary to the claimed method and system." Prelim. Resp. 42–43 (citing Ex. 1010, 10–11, Fig. 4). Patent Owner further argues that a skilled artisan

> would have no motivation to modify the capture system of Brugh, in light of Kunz, to be a multi-net capture system because any alleged advantage of Kunz's outdoor capture system is not needed in Brugh's indoor capture system. For instance, outdoor spaces obviously do not have any walls or a ceiling that define an enclosed space.

Id. at 43.

Weighing the parties' arguments and evidence, we find that Petitioner has not shown sufficiently that it would have been obvious to modify Brugh to arrive at a "perimeter net" located at or proximate to a perimeter wall.

As discussed above regarding Ground A, we agree that a skilled artisan would have found it obvious to modify Brugh to teach multiple capture devices having nets. We disagree, however, with Petitioner's contention that Kunz would have further motivated that artisan "to use a plurality of Brugh's capture devices—specifically, at least one 'perimeter net' and at least one 'trapping net' as recited in" claim 6. Pet. 30 (citing Ex. 1004 ¶ 96).

Petitioner's contention that

> a POSA would have found it obvious (and would have been motivated) to observe the flyways of flying vertebrates in a building and place multiple nets (e.g., at least one perimeter net and at least one trapping net) within the building for the purpose of effectively capturing the identified flying vertebrates

is not supported by rational underpinning. *Id.* at 31 (citing Ex. 1004 ¶ 115). Petitioner's basis for this contention is that "Kunz notes that it is effective to place multiple nets such that 'the perimeters of roosts are either partially or completely surrounded by one or more nets.'" *Id.* (citing Ex. 1010, 10–11, Fig. 4). Although Kunz discusses netting bats at "*openings* to caves, mines, and buildings" (Ex. 1010, 8 (citing Fig. 3A) (emphasis added)) and capturing bats "if the perimeters of roosts are either partially or completely surrounded by one or more nets" (*id.* at 10 (citing Figs. 4E, 4F)), Kunz makes no assertions or statements that bats tend to roost at or proximate to *the perimeter wall within a building.*

Further, and even if Kunz depicts a net in an attic (Ex. 1010, 9, Fig. 3A), Petitioner does not explain sufficiently why a skilled artisan would have combined this teaching with Brugh's teachings to arrive at the claimed "perimeter net."

As Patent Owner asserts, trapping flying vertebrates inside a building presents different challenges from capturing bats outdoors. Prelim. Resp. 41. Kunz's configuration regarding a building (Ex. 1010, 10, Fig. 4F) has the netting surrounding, i.e., *along the outside perimeter*, of the building, and not at or proximate to a perimeter within the building, as the term "perimeter net" requires. *See supra* § III.C.1. Petitioner fails to sufficiently explain why a skilled artisan would have taken an outdoor netting

configuration around the exterior of a building and place it inside a building at or proximate to a perimeter wall. *See* Pet. 14–17.

In sum, we do not find that Petitioner has demonstrated a reasonable likelihood of establishing obviousness of any of the challenged claims based on Brugh and Kunz.

3. Claims 1–5 and 7–16

Claims 7–12 depend from claim 6 and Petitioner relies on the same faulty reasoning for challenging these dependent claims as relied on in its challenge of independent claim 6. *See* Pet. 32–35. Accordingly, Petitioner has not demonstrated a reasonable likelihood of establishing obviousness of claims 7–12 based on Brugh in view of Kunz.

Independent claims 1 and 13 and their respective dependent claims 2–5 and 14–16 each requires a "perimeter net" or "perimeter net system." *See* Ex. 1001, 5:29–7:24. To satisfy these "perimeter net" limitations, Petitioner relies on the same insufficient reasoning relied upon in its challenge of claim 6. *See* Pet. 36 (addressing independent claim 13), 37–39 (addressing dependent claims 14–16), 39–40 (addressing independent claim 1), 41–46 (addressing dependent claims 2–5).

For the same reasons discussed above in relation to claim 6, Petitioner has not demonstrated a reasonable likelihood of establishing obviousness of claims 1–5 and 7–16 based on Brugh in view of Kunz.

4. Summary of Ground B

Petitioner has not demonstrated a reasonable likelihood of establishing obviousness of claims 1–16 based on Brugh in view of Kunz.

G. Ground C: Unpatentable over the Bird Barrier Video and Kunz

Petitioner contends that claims 1–16 would have been obvious over the Bird Barrier Video and Kunz. Pet. 9–25.

1. Bird Barrier Video (Exs. 1009, 1014)

According to Petitioner, the Bird Barrier Video (Ex. 1009) was uploaded to YouTube on August 29, 2014. Pet. 46. Petitioner also submits a transcript of the video (Ex. 1014). *Id.* (citing Ex. 1016). The Bird Barrier Video discloses the use of mist nets suspended between telescoping poles. *See, e.g.*, Ex. 1014, Figs. 11–13; *see also* Ex. 1009, 0:19–0:37. The telescoping poles include a magnetic portion for attaching to a rafter in the ceiling. *See* Ex. 1009, 1:03–1:59; Ex. 1014, Figs. 8, 11, 13, 14. The net includes pockets for capturing birds. Ex. 1014, Figs. 6, 15; Ex. 1009, 0:10–0:37.

Petitioner submits three annotated snapshots of the Video (Pet. 48), copies of which we reproduce, below:

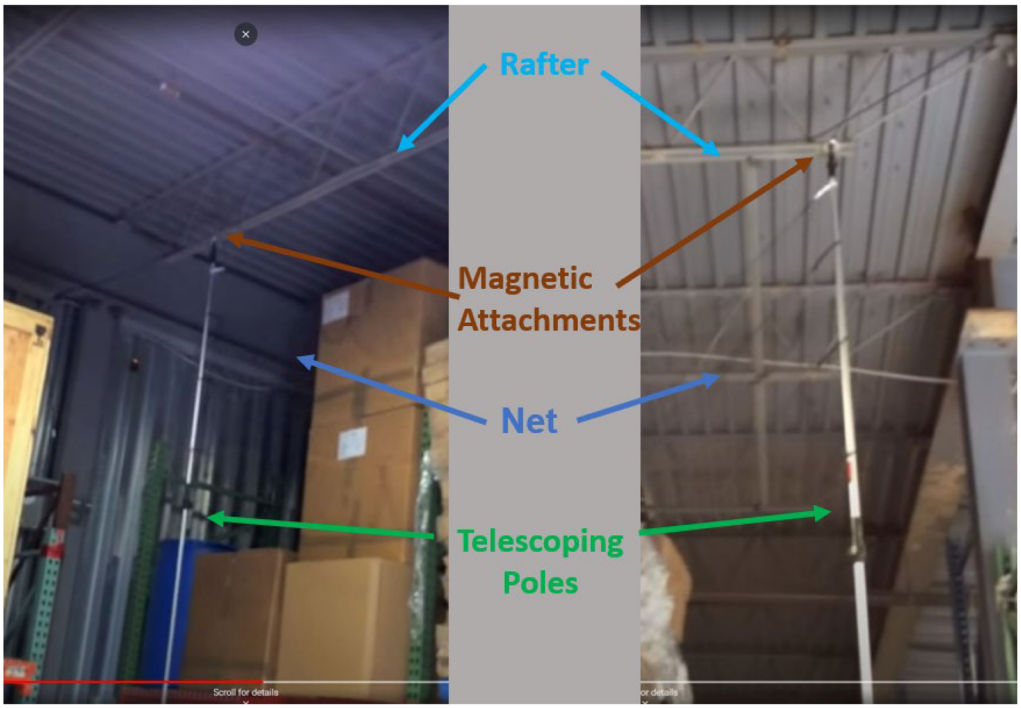

Bird Barrier Video –1:49 (right) & 1:59 (left) (annotated)

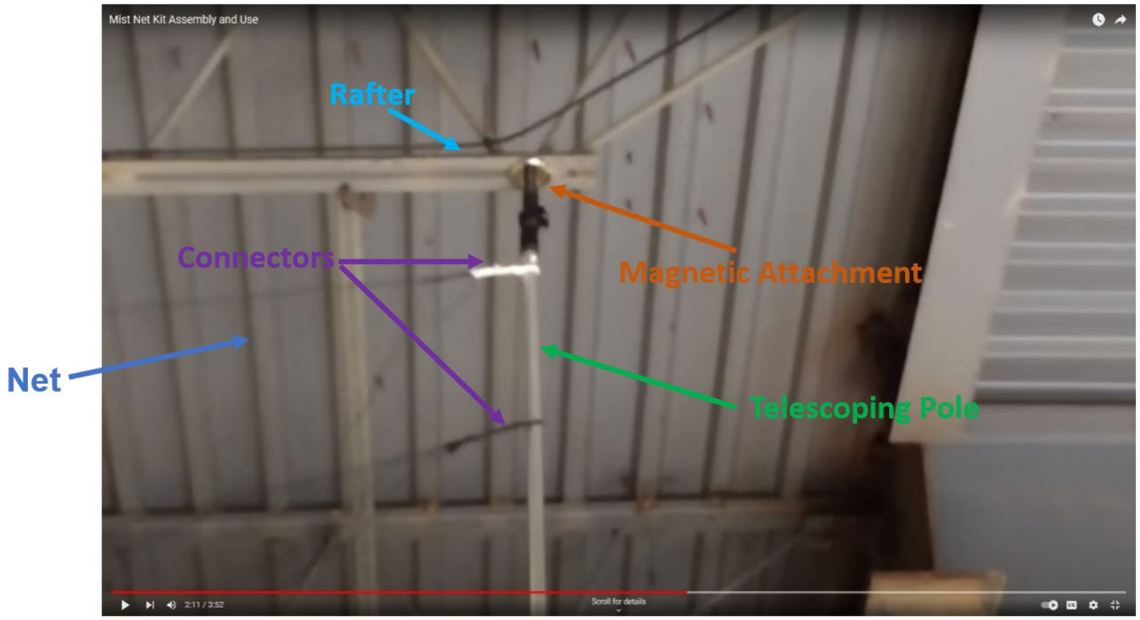

Bird Barrier Video – 2:11

According to Petitioner, the upper-left snapshot is taken at time 1:49 of the Video, the upper-right snapshot is taken at time 1:59 of the Video, and the lower snapshot is taken at time 2:11 of the Video. The three snapshots each

depicts the telescoping poles holding a net and attached to a rafter of the ceiling by magnetic attachments. The lower, third snapshot, also depicts "connectors" for attaching the net to the telescopic poles.

2. *Analysis of Claim 6*

Petitioner challenges claim 6 as obvious over the Bird Barrier Video in view of Kunz. Pet. 46.

To address the "perimeter net" and three "trapping nets," Petitioner submits that a skilled artisan "would have found it obvious to provide four of the mist net kits as part of an animal relocation system (e.g., one perimeter and three trapping nets)." Pet. 50 (citing Ex. 1004 ¶¶ 160–63). Petitioner explains that a skilled artisan "would have appreciated that the mist net kit is both a perimeter net and a trapping net." *Id.* at 51 (citing Ex. 1004 ¶¶ 164–66). Petitioner cites to the following teachings of the cited art:

1. The Bird Barrier Video's kit includes a mist net configured to be hung from rafters and that a skilled artisan "would have appreciated that the Bird Barrier Video's kit is capable of being positioned along the perimeter of [an] enclosure." *Id.* (citing Ex. 1009, 0:10–0:58, 1:44–2:06, 3:01–3:10; Ex. 1014, Figs. 11–14; Ex. 1004 ¶¶ 164–65).
2. The Bird Barrier Video's mist net includes "horizontal pockets" for capturing birds. *Id.* (citing Ex. 1009, 0:10–37; Ex. 1014, Figs. 6, 15).
3. "The Bird Barrier Video indicates that during installation, operators should 'walk the completed net assembly to a target location near where the bird activity as been observed.'" *Id.* at 51–52 (citing Ex. 1009, 1:27–40; Ex. 1014, 1).
4. Figure 13 of the video transcript "show[s a] mist net installed along a perimeter wall." *Id.* at 51; *see* Ex. 1014, 9 (depicting Fig. 13).

5. "Kunz discloses that mist nets can be deployed anywhere bats (and other animals) 'are expected to fly.'" *Id.* at 52 (citing Ex. 1010, 8).

6. "Kunz discloses various multi-net 'configurations,' which ensure that when a bat attempts to 'avoid one net' it may 'become captured in another.'" *Id.* (citing Ex. 1010, 10, Figs. 3, 4).

Based on these teachings, Petitioner reasons that

> [A] POSA would have found it obvious to (and would have been motivated to) provide four of the mist net kits, for example, in instances where **(i)** the flight pattern of a flying bird (or multiple birds) within a building includes (or is expected to include) four different locations or **(ii)** where four or more flying birds are present (or expected to be present) in the building . . . . Moreover, the inclusion of four nets would amount to the mere duplication of parts with a predictable result (increased capture effectiveness), which is well-within the level of skill in the art.

Pet. 52 (citing Ex 1004 ¶¶ 161–62; *In re Application of Harza,* 274 F.2d 669, 671 (C.C.P.A. 1960); *Low Temp Indus., Inc. v. Duke Mfg. Co.*, No. 2021-2137, 2021 WL 6124455, at *5-6 (Fed. Cir. Dec. 28, 2021).

Petitioner further reasons that

> A POSA would be motivated to combine the teachings of the Bird Barrier Video and Kunz to arrive at the claimed invention. . . . The '374 Patent broadly defines its "Field," generally encompassing relocating animals with a "net system and various flushing techniques." . . . . The Bird Barrier Video is directed to the same field—a mist net kit for capturing birds inside a building. . . . Likewise, Kunz discusses the use of mist nets to capture bats . . . and discloses that its techniques are "equally suitable for . . . other terrestrial vertebrate," which would include birds . . . . Indeed, both the Bird Barrier Video and Kunz disclose techniques for using mist nets and poles to capture flying vertebrates.

> Accordingly, a POSA would have been motivated to look to the teachings of both the Bird Barrier Video and Kunz for installing systems to capture and relocate birds . . . . As described below, a POSA would have found it obvious to use and adapt the Bird Barrier Video mist net kit in accordance with the teachings of Kunz.

Id. at 49–50 (citing Ex. 1001, 1:8–12; Ex. 1004 ¶¶ 155–58; 1009, 0:10–0:37; Ex. 1010, ix., 1, 6, 8, 10–12; Ex. 1014, Fig. 2).

Petitioner further reasons that a

> POSA would have found it further obvious in view of the Bird Barrier Video and Kunz to specifically (i) *install one of the mist net kits along a perimeter wall* and (ii) three more of the mist net kits in additional locations (e.g., around the interior of the building). Given the combined teachings of the Bird Barrier Video and Kunz, a POSA would have understood that installing the Bird Barrier Video mist net kit in this way (e.g., in response to observing flyways in these locations) would have predictably resulted in an effective capture system within the building.

Id. at 51–52 (citing Ex. 1004 ¶¶ 164–65) (emphasis replaced).

Patent Owner argues that a skilled artisan "would have no motivation to modify the capture system of Bird Barrier Video, in light of Kunz, to be a multi-net capture system because any alleged advantage of Kunz's outdoor capture system is not needed in [the] Bird Barrier Video's indoor capture system." Prelim. Resp. 50.

We agree with Patent Owner.

We first point out that the Bird Barrier Video *does not* disclose a "mist net installed along a perimeter wall." Pet. 51 (referencing Ex. 1014, Fig. 13). To illustrate, we reproduce Figure 13 from the transcript of the Bird Barrier Video, below:

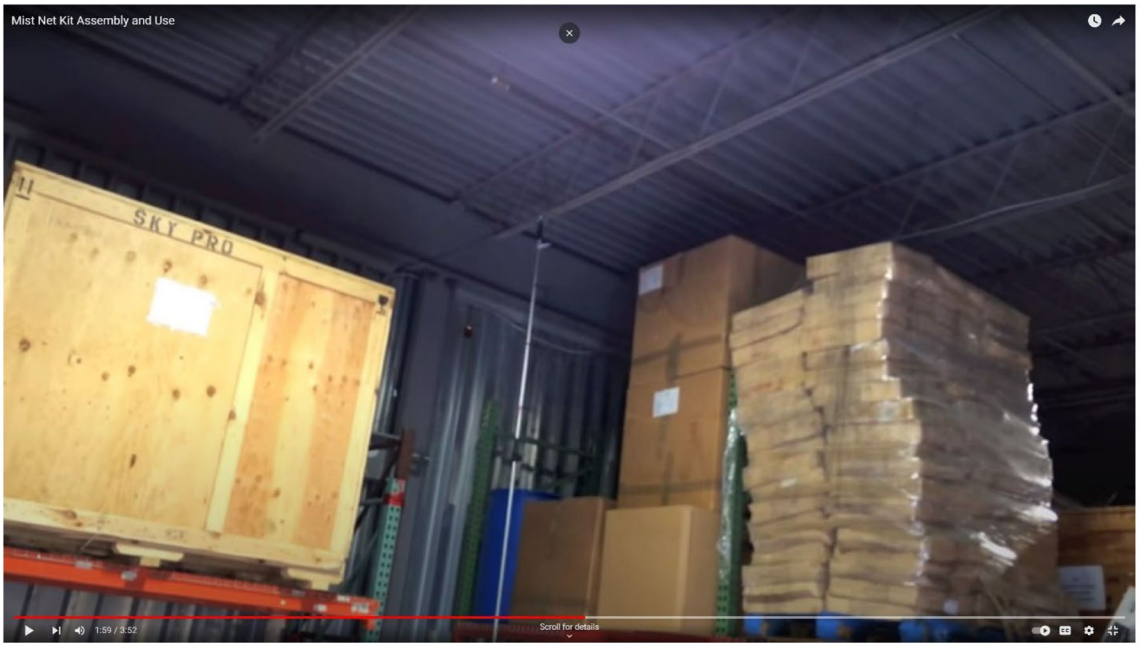

Figure 13 – Screenshot at 1:59

Ex. 1014, 9. Petitioner submits that Figure 13 is a screenshot from the Bird Barrier Video taken at 1:59 and "show[s a] mist net installed along a perimeter wall." Pet. 51.

Contrary to Petitioner's assertion, we do not find Figure 13 as showing a net positioned "along a perimeter wall." Figure 13 is not clear. From this figure alone, we cannot discern the distance of the net from the wall.

We further disagree with Petitioner that a skilled artisan would have combined the teachings of the Bird Barrier Video with Kunz to arrive at the recited system of nets. Having weighed the competing testimony of Petitioner's expert (Dr. Chamberlain (Ex. 1004)) and Patent Owner's expert (Mr. Tolley (Ex. 2001)), we credit Mr. Tolley's testimony that a skilled artisan would not have combined Kunz's teachings with the Bird Barrier Video as Petitioner has done. *See* Ex. 2001 ¶¶ 65–67. Petitioner's rationale for combining the Bird Barrier Video with Kunz is based on impermissible

hindsight. *See InTouch Tech., Inc. v. VGO Comm., Inc.*, 751 F.3d 1327, 1352 (Fed. Cir. 2014) (finding hindsight bias in expert testimony that "primarily consisted of conclusory references to [the] belief that one of ordinary skill in the art *could* combine these references, not that they *would* have been motivated to do so"); *see also KSR*, 550 U.S. at 420 (holding that factfinders must be aware "of the distortion caused by hindsight bias and must be cautious of arguments reliant upon *ex post* reasoning.").

Dr. Chamberlain provides the following three reasons why a skilled artisan would have combined the Bird Barrier Video with Kunz to arrive at the claimed arrangement of nets:

> (1) First, given the Bird Barrier Video's teaching that the capture device should be moved to a "*target location near where the bird activity has been observed*," a POSA would have it found obvious to place at least one of the Bird Barrier Video capture devices along a perimeter wall and at least three of the Bird Barrier Video's capture devices in other locations within a building in response to observing flight patterns in those four locations.
>
> (2) Second, in my opinion, a POSA would have understood that placing the Bird Barrier Video's capture device proximal to a bird—with at least one capture device along a perimeter wall and at least three capture devices in other locations—would *effectively shrink the area in which the bird is able to fly and thereby improve the likelihood of capture*. Indeed, this is a matter of basic geometry and a predictable result of using multiple capture devices in a building.
>
> (3) Additionally, as I have previously discussed, *bats and other animals, tend to roost along the perimeter walls* of a structure as they are more protected from frequent disturbances.

Ex. 1004 ¶ 165 (citing Ex. 1009, 1:21–1:44; Ex. 1014 ¶ 1; Ex. 1018, 81) (numbering and emphases added).

As to Dr. Chamberlain's *first reason*, that a skilled artisan would have placed a net along a perimeter wall as a "*target location near where the bird activity has been observed,*" we disagree. Ex. 1004 ¶ 165. Dr. Chamberlain's reasoning that a skilled artisan would have placed the nets "in response to observing flight patterns" presumes that birds fly along the perimeter of a building's interior, yet the evidence does not support such a finding. *See id.* (citing Ex. 1009, 1:21–44; Ex. 1014 ¶ 1).

Dr. Chamberlain's *second reason*, that placing "at least one capture device along a perimeter wall and at least three capture devices in other locations [] would effectively *shrink the area* in which the bird is able to fly and thereby improve the likelihood of capture" (*id.* (emphasis added)), is also unpersuasive. Dr. Chamberlain's reason to "shrink the area" is derived *solely* from the '374 patent. As explained above (*see supra* § III.E.2), impermissible hindsight occurs when a skilled artisan is imbued with knowledge taught *only* by the challenged patent. *See W.L. Gore*, 721 F.2d at 1553. Rather than taught by the Bird Barrier Video or Kunz, it is the '374 patent that describes improving animal capture by reducing the capture area with the claimed perimeter and trapping nets. *See, e.g.*, Ex. 1001, 3:5–9.

Dr. Chamberlain's *third reason* presumes that "bats and other animals, tend to roost along the perimeter walls" (Ex. 1004 ¶ 165), yet the evidence does not support this finding. For example, Tuttle (Ex. 1018), which Dr. Chamberlain cites to (Ex. 1004 ¶ 165), discloses that for bats that roost in buildings, the likely roosting sites are "tile roofs, attics, and cavities between walls and any place that is dark or dimly lit and protected from frequent disturbance" (Ex. 1018, 81). Petitioner provides no evidence that bats or other flying animals are likely to fly or roost along the inner

perimeter of a structure such that a skilled artisan would have found it obvious to place a net along the perimeter of a wall within a building.

Accordingly, Petitioner has not demonstrated a reasonable likelihood of establishing obviousness of claim 6 based on the Bird Barrier Video in view of Kunz.

3. Claims 1–5 and 7–17

Claims 7–12 depend from claim 6 and Petitioner relies on the same faulty reasoning for challenging these dependent claims as relied on its it challenge of independent claim 6. *See* Pet. 54–60. Accordingly, Petitioner has not demonstrated a reasonable likelihood of establishing obviousness of claims 7–12 based on the Bird Barrier Video in view of Kunz.

To satisfy these "perimeter net" limitations of claims 1–6 and 13–16, Petitioner relies on the same insufficient reasoning relied upon in its challenge of claim 6. *See* Pet. 61 (addressing independent claim 13), 62–64 (addressing dependent claims 14–16), 65 (addressing independent claim 1), 69–70 (addressing dependent claims 2–5).

For the same reasons discussed above in relation to claim 6, Petitioner has not demonstrated a reasonable likelihood of establishing obviousness of claims 1–5 and 7–16 based on the Bird Barrier Video in view of Kunz.

4. Summary of Ground C

Petitioner has not demonstrated a reasonable likelihood of establishing obviousness of claims 1–16 based on the Bird Barrier Video in view of Kunz.

IV. CONCLUSION

We deny to institute review of any of the challenged claims.

V. ORDER

For the reasons above, it is:

ORDERED that the Petition is *denied* as to the grounds and all challenged claims of the ’374 patent.

PETITIONER:

Christopher B. Kelly
Ckelly@mcciplaw.com

Warren J. Thomas
wthomas@mcciplaw.com

Alexander M. Gabanic
mgabanic@mcciplaw.com

Siraj M. Abhyankar
shri.abhyankar@alston.com

PATENT OWNER:

Preston H. Heard
Preston.Heard@wbd-us.com

Carl B. Massey
Carl@masseyip.com

John Morrow
John.Morrow@wbd-us.com