US007259710B2

(12) **United States Patent**
Kisliakov

(10) **Patent No.: US 7,259,710 B2**
(45) **Date of Patent: Aug. 21, 2007**

(54) **USER INPUT DEVICE**

(75) Inventor: **Andrew Kisliakov**, Burwood (AU)

(73) Assignee: **Canon Information Systems Research Australia Pty Ltd** (AU)

(*) Notice: Subject to any disclaimer, the term of this patent is extended or adjusted under 35 U.S.C. 154(b) by 771 days.

(21) Appl. No.: **10/635,491**

(22) Filed: **Aug. 7, 2003**

(65) **Prior Publication Data**

US 2004/0075642 A1 Apr. 22, 2004

(30) **Foreign Application Priority Data**

Aug. 7, 2002 (AU) 2002950791
Aug. 7, 2002 (AU) 2002950793

(51) **Int. Cl.**
G08C 19/12 (2006.01)

(52) **U.S. Cl.** **341/176**; 340/825.69; 348/734; 711/115

(58) **Field of Classification Search** 341/176; 340/825.69, 825.72; 348/734; 711/115
See application file for complete search history.

(56) **References Cited**

U.S. PATENT DOCUMENTS

4,623,887	A	11/1986	Welles, II	340/825.57
4,626,848	A	12/1986	Ehlers	340/825.69
4,825,200	A	4/1989	Evans et al.	341/23
4,959,810	A	9/1990	Darbee et al.	398/112
5,002,062	A	3/1991	Suzuki	128/696
5,228,077	A	7/1993	Darbee	379/102.01
5,353,016	A	10/1994	Kurita et al.	340/825.22
5,414,426	A	5/1995	O'Donnell et al.	341/176
5,552,917	A	9/1996	Darbee et al.	398/107
5,601,489	A	2/1997	Komaki	463/44
5,880,769	A	3/1999	Nemirofsky et al.	725/139
5,907,350	A	5/1999	Nemirofsky	725/23
5,949,492	A	9/1999	Mankovitz	348/473
5,973,475	A	10/1999	Combaluzier	320/107
6,014,593	A	1/2000	Grufman	700/136
6,223,348	B1	4/2001	Hayes et al.	725/152
6,229,694	B1	5/2001	Kono	361/683
6,602,001	B1 *	8/2003	Hatano et al.	398/106
2001/0017616	A1	8/2001	Kobayashi	345/173
2001/0054647	A1 *	12/2001	Keronen et al.	235/492
2003/0209607	A1	11/2003	Kisliakov	235/492
2003/0212635	A1	11/2003	Kisliakov	705/41
2003/0212895	A1	11/2003	Kisliakov	713/185

FOREIGN PATENT DOCUMENTS

AU	28896/95	2/1996
DE	3637684	5/1987
EP	0 469 581	2/1992
JP	59-123986	7/1984
JP	04-88547	3/1992
JP	U03-71329	6/2000
WO	95/35534	12/1995

* cited by examiner

Primary Examiner—Timothy Edwards, Jr.
(74) *Attorney, Agent, or Firm*—Fitzpatrick, Cella, Harper & Scinto

(57) **ABSTRACT**

A user input device (**300**) configured with a communication protocol for communicating transmission data with predetermined apparatus (**700**, **601**) is disclosed. The device (**300**) comprises a receiving means for receiving protocol data and an associated format function. The protocol data and the format function in combination describe a further communication protocol for communicating with the predetermined apparatus (**700**, **601**). The device (**300**) also comprises a central processing unit (**805**) for selecting the received protocol data and the format function and for configuring the device (**300**) to communicate with the predetermined apparatus (**700**, **601**). The protocol data defines properties of the further communication protocol and the format function is adapted to configure at least a portion of the transmission data for communication with the apparatus (**700**, **601**) according to the further communications protocol.

22 Claims, 57 Drawing Sheets

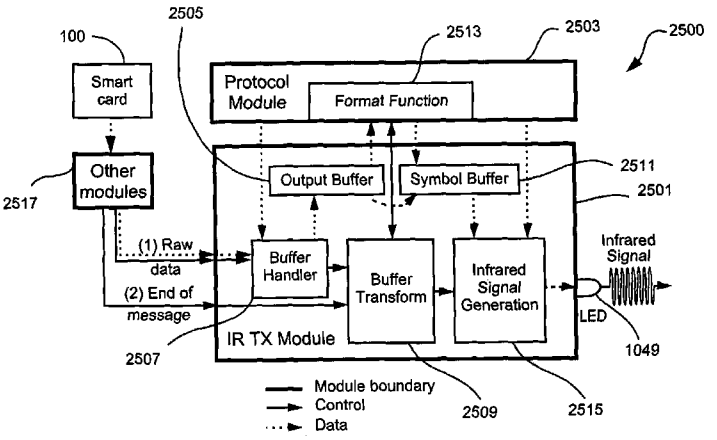

Roku Exhibit 1036
Roku Inc. v. Universal Elecs. Inc.
IPR2022-01289
Page 00001

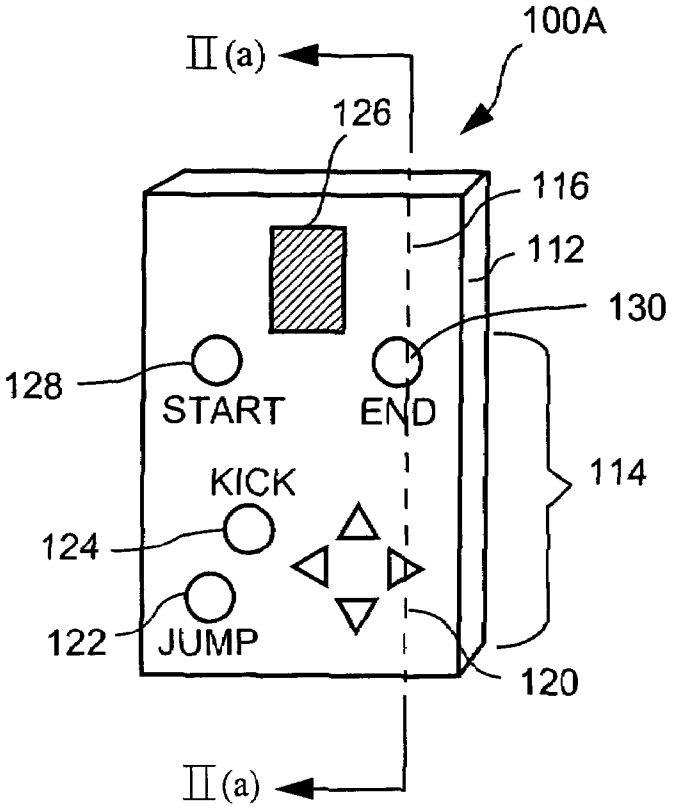
100A
II (a)
126
116
112
130
128
START
END
114
KICK
124
122
JUMP
120
II (a)

Fig. 1(a)

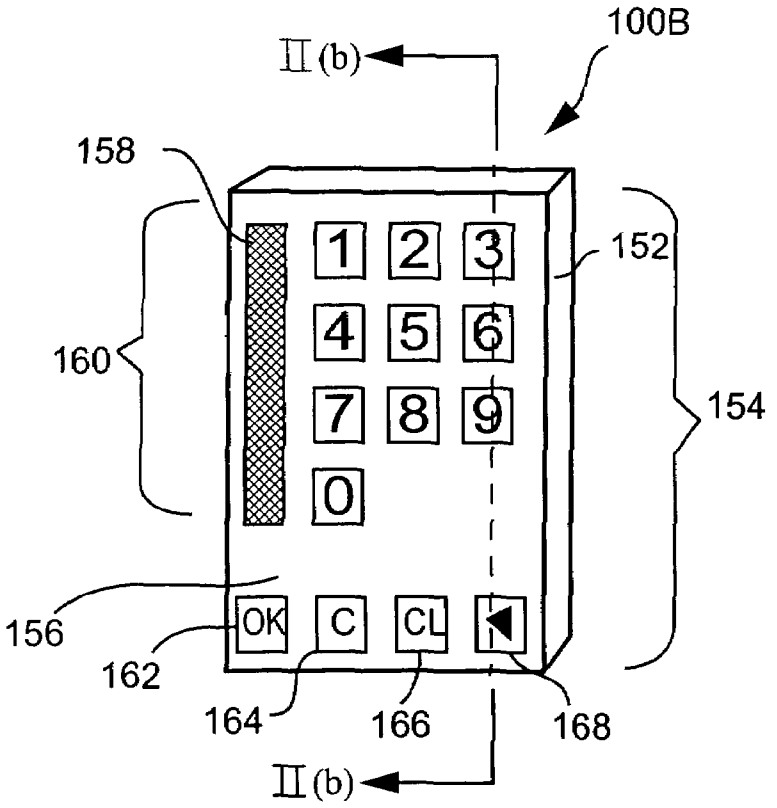
100B
II (b)
158
1 2 3
152
4 5 6
160
7 8 9
154
0
156
OK C CL
162
164
166
168
II (b)

Fig. 1(b)

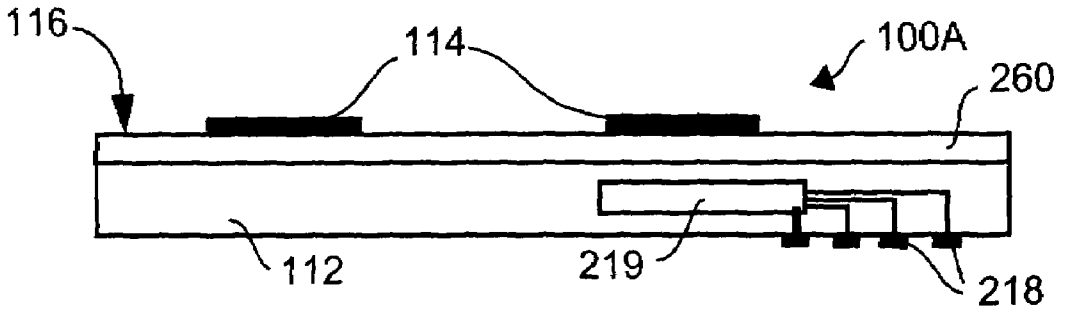
116
114
100A
260
112
219
218

Fig. 2(a)

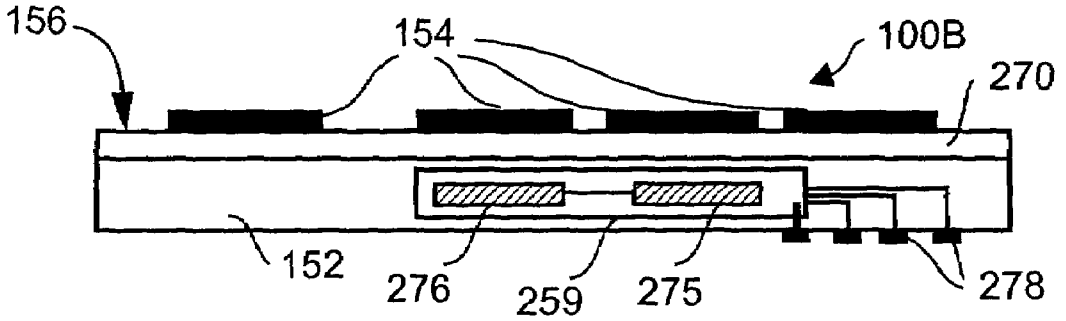
156
154
100B
270
152
276
259
275
278

Fig. 2(b)

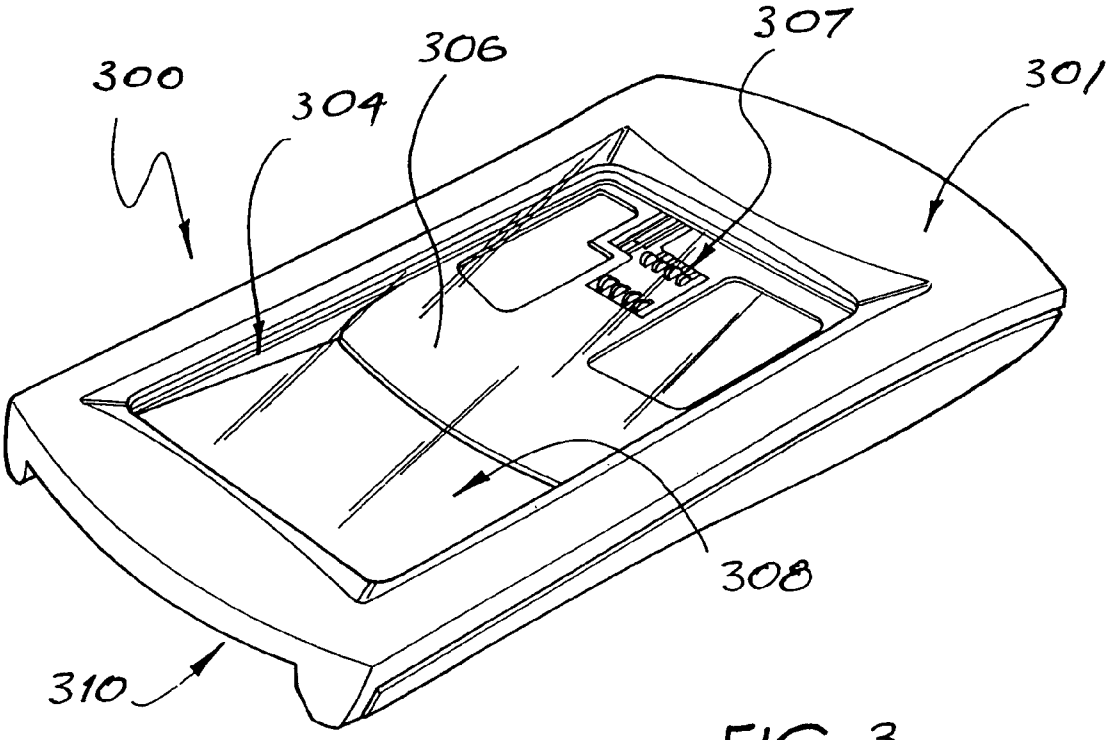

FIG. 3

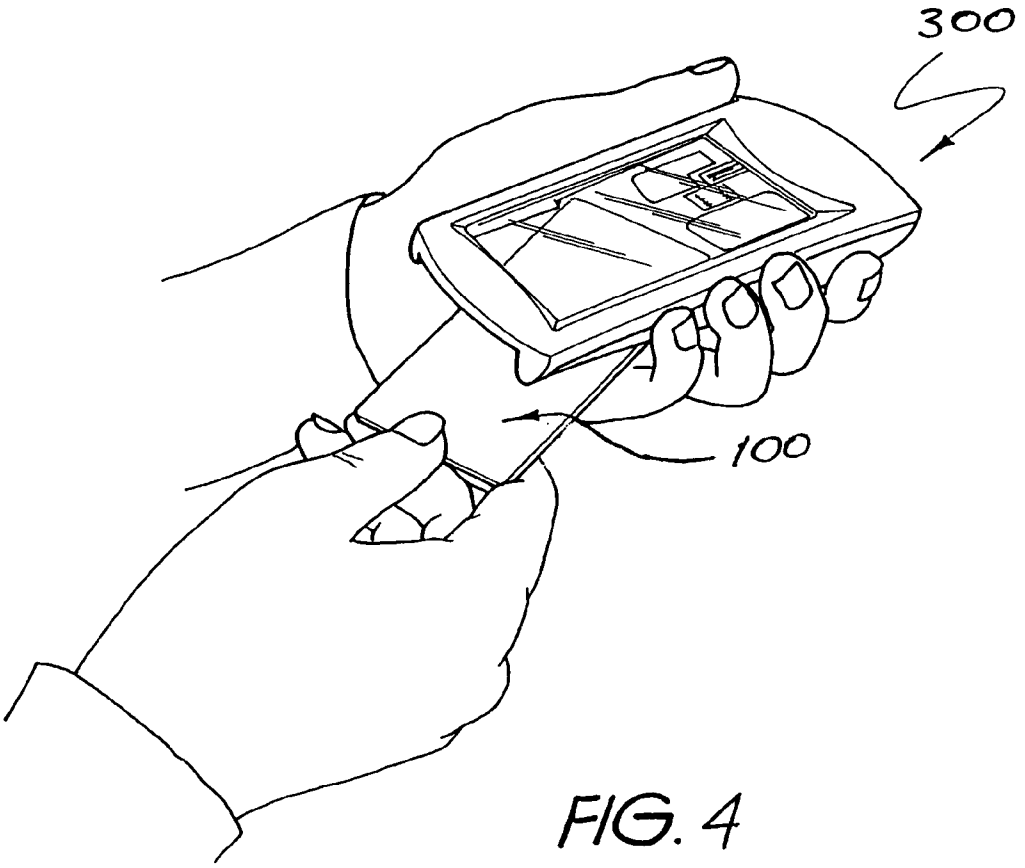

FIG. 4

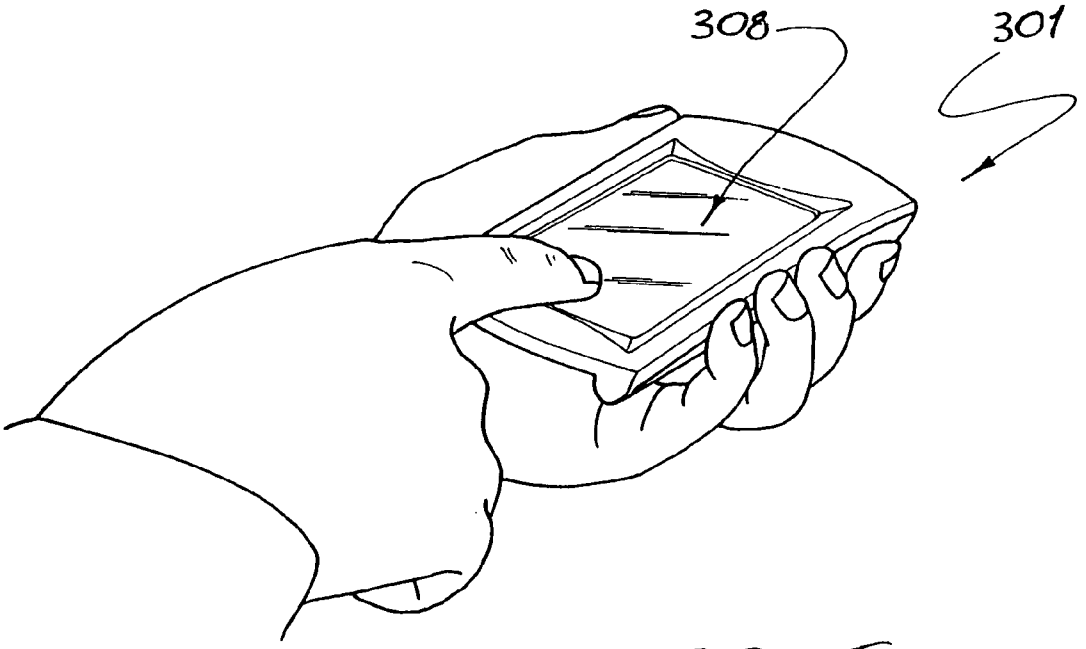

FIG. 5

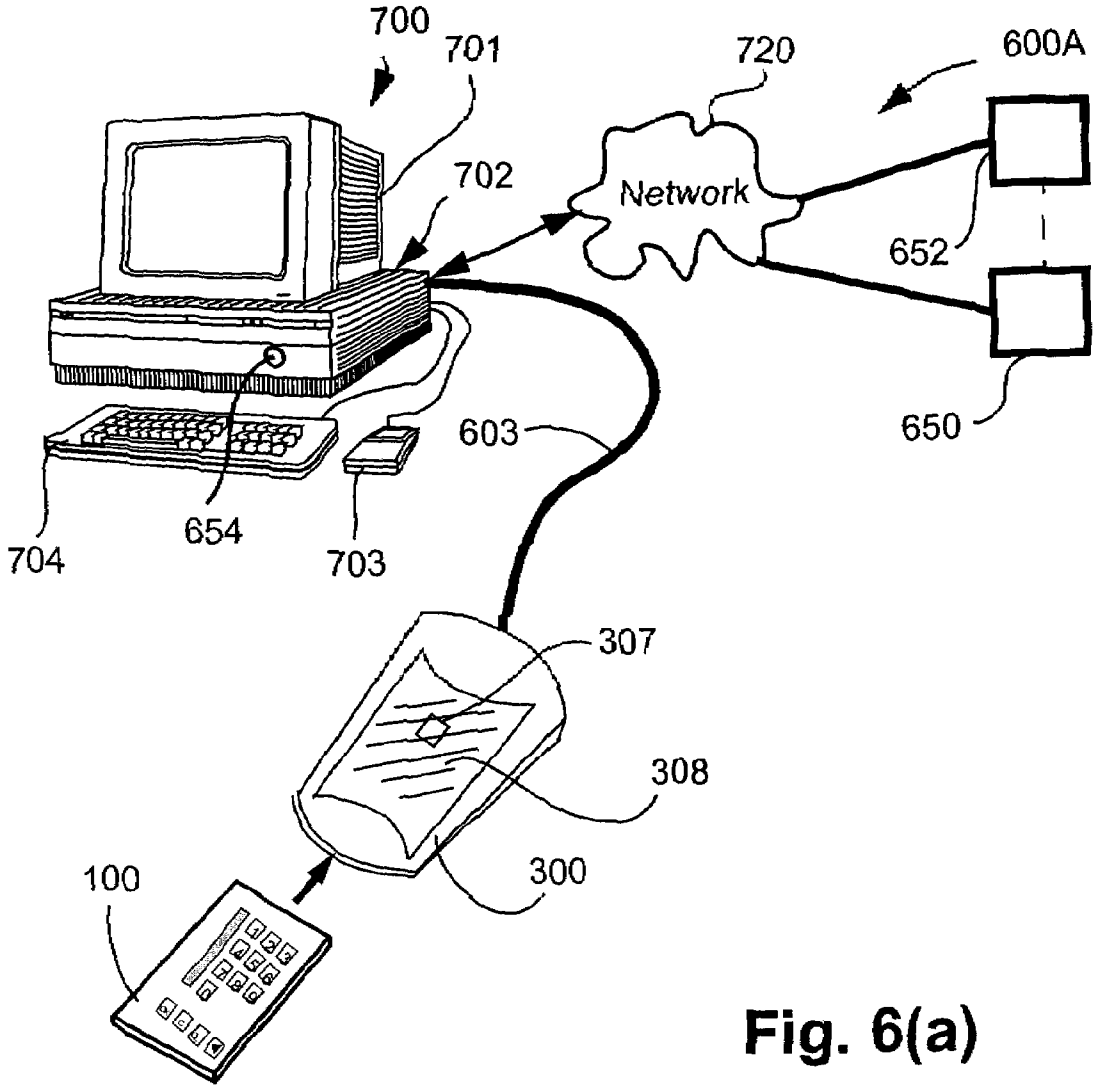
700
701
720
600A
702
Network
652
650
603
654
704
703
307
308
300
100

Fig. 6(a)

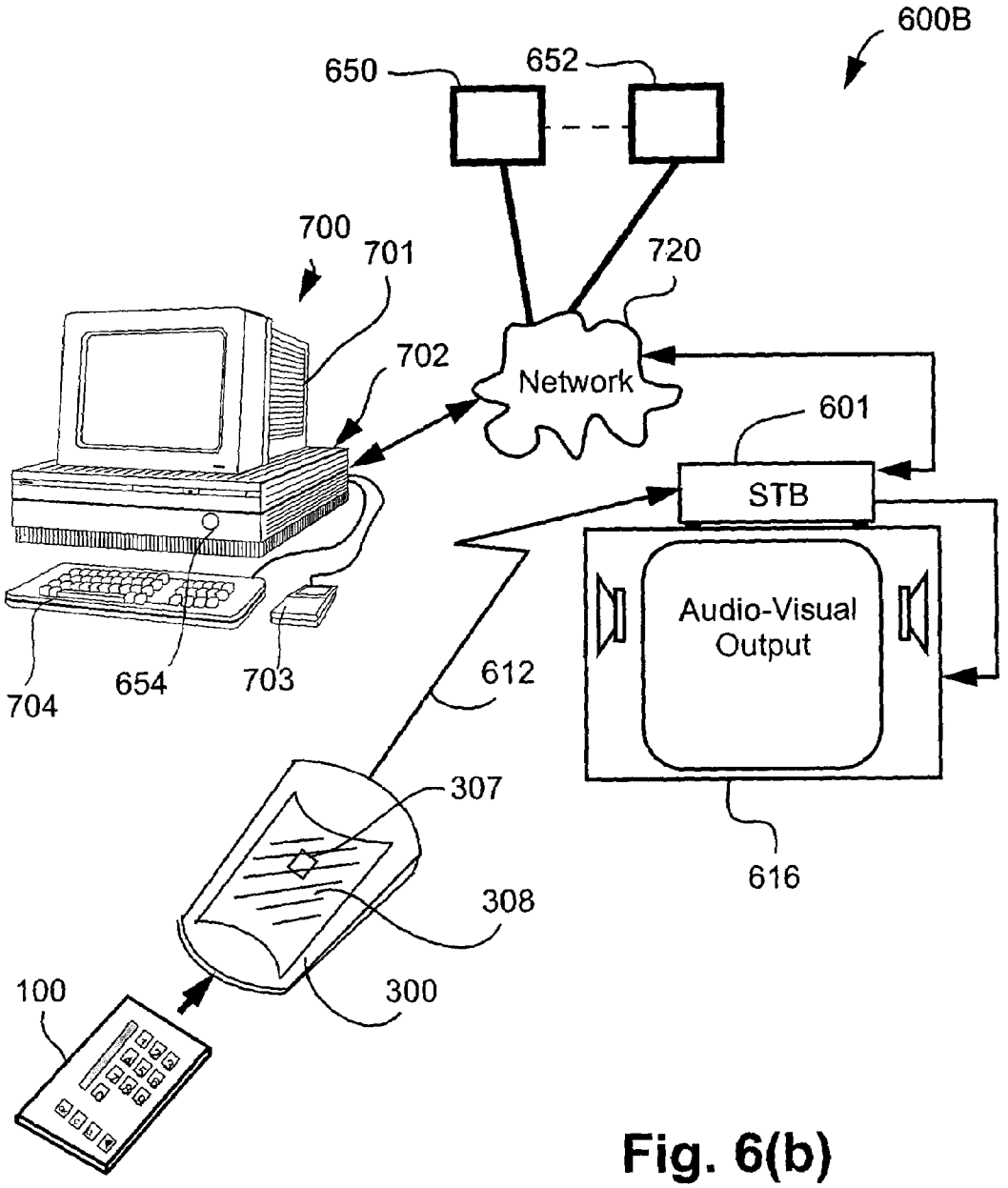
600B
650
652
700
701
720
702
Network
601
STB
Audio-Visual
Output
704
654
703
612
307
616
308
100
300

Fig. 6(b)

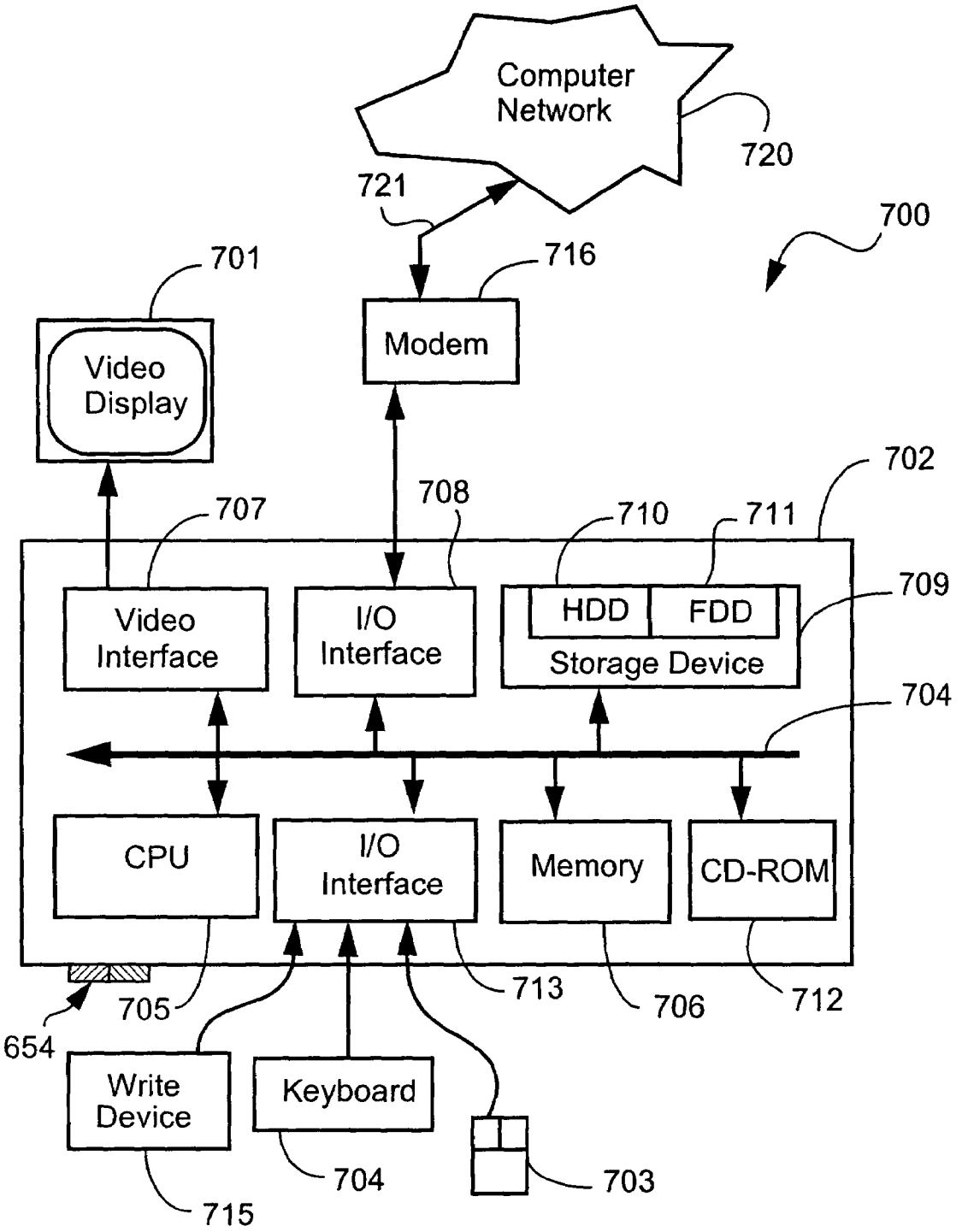
Computer Network
720
721
700
701
716
Video Display
Modem
702
707
708
710
711
709
Video Interface
I/O Interface
HDD
FDD
Storage Device
704
CPU
I/O Interface
Memory
CD-ROM
654
705
713
706
712
Write Device
Keyboard
704
703
715

Fig. 7

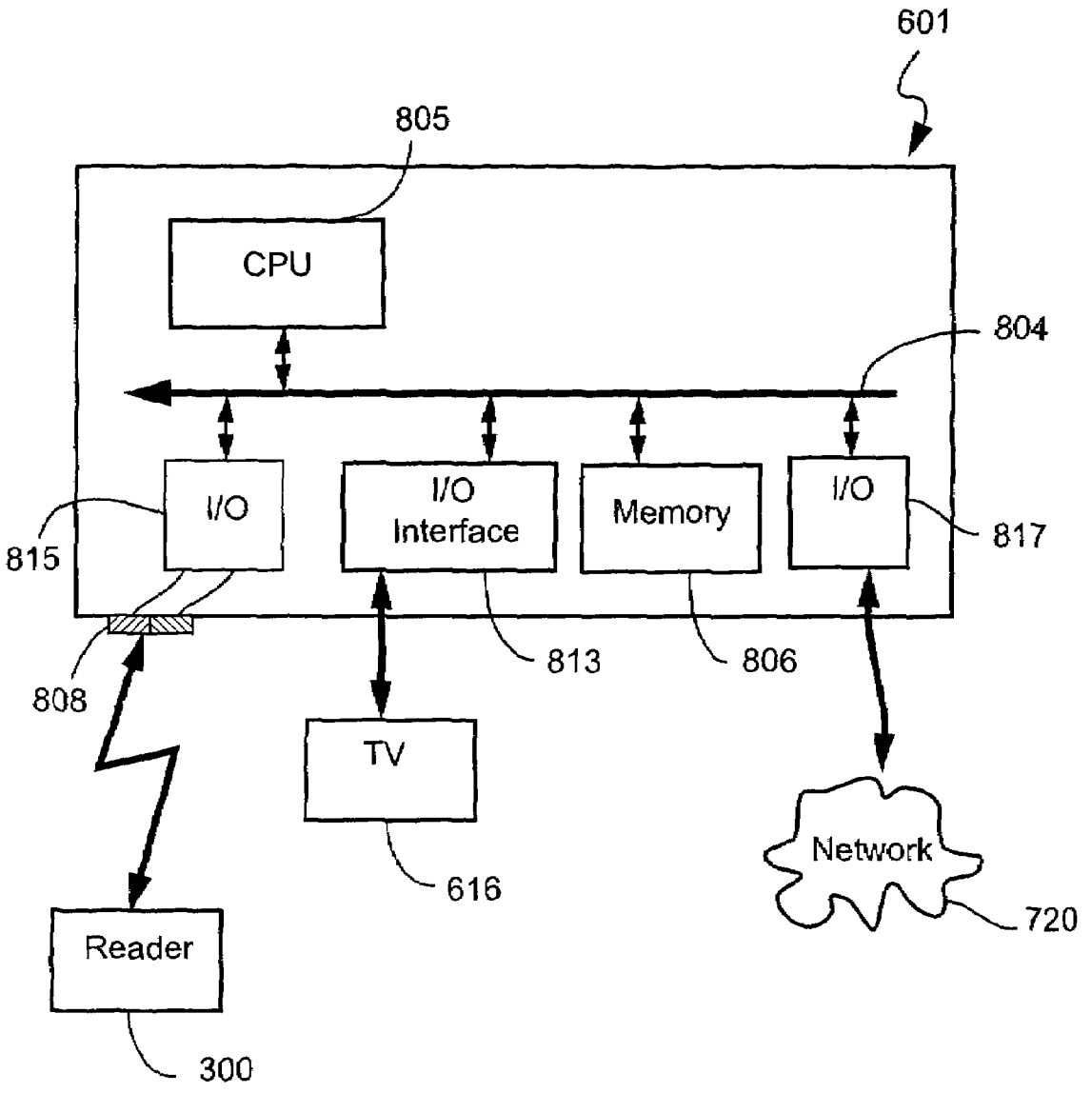
601
805
CPU
804
I/O
I/O Interface
Memory
I/O
815
817
808
813
806
TV
Network
616
720
Reader
300

Fig. 8

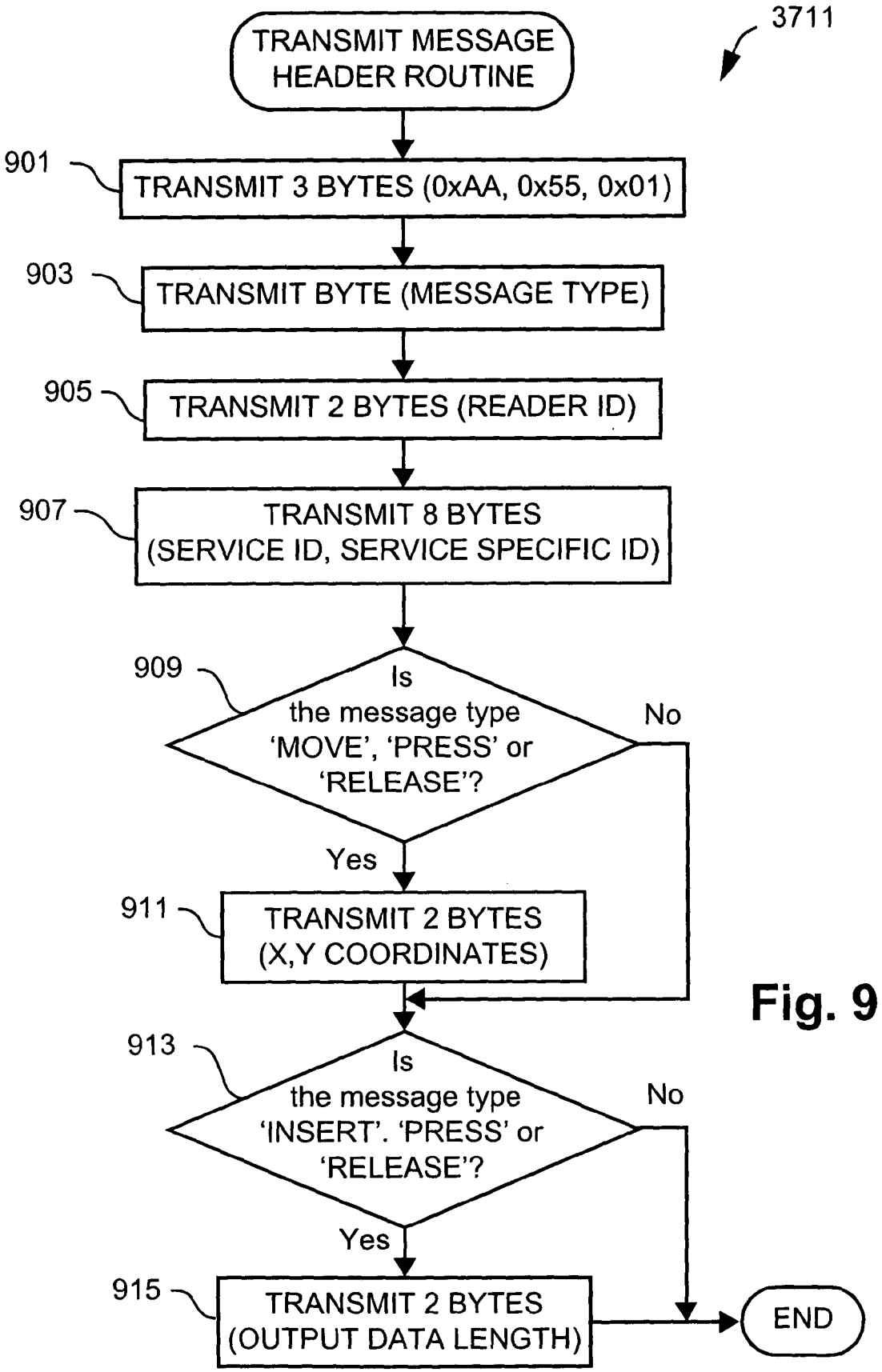
3711
TRANSMIT MESSAGE HEADER ROUTINE
901
TRANSMIT 3 BYTES (0xAA, 0x55, 0x01)
903
TRANSMIT BYTE (MESSAGE TYPE)
905
TRANSMIT 2 BYTES (READER ID)
907
TRANSMIT 8 BYTES (SERVICE ID, SERVICE SPECIFIC ID)
909
Is the message type 'MOVE', 'PRESS' or 'RELEASE'?
No
Yes
911
TRANSMIT 2 BYTES (X,Y COORDINATES)
913
Is the message type 'INSERT'. 'PRESS' or 'RELEASE'?
No
Yes
915
TRANSMIT 2 BYTES (OUTPUT DATA LENGTH)
END

Fig. 9

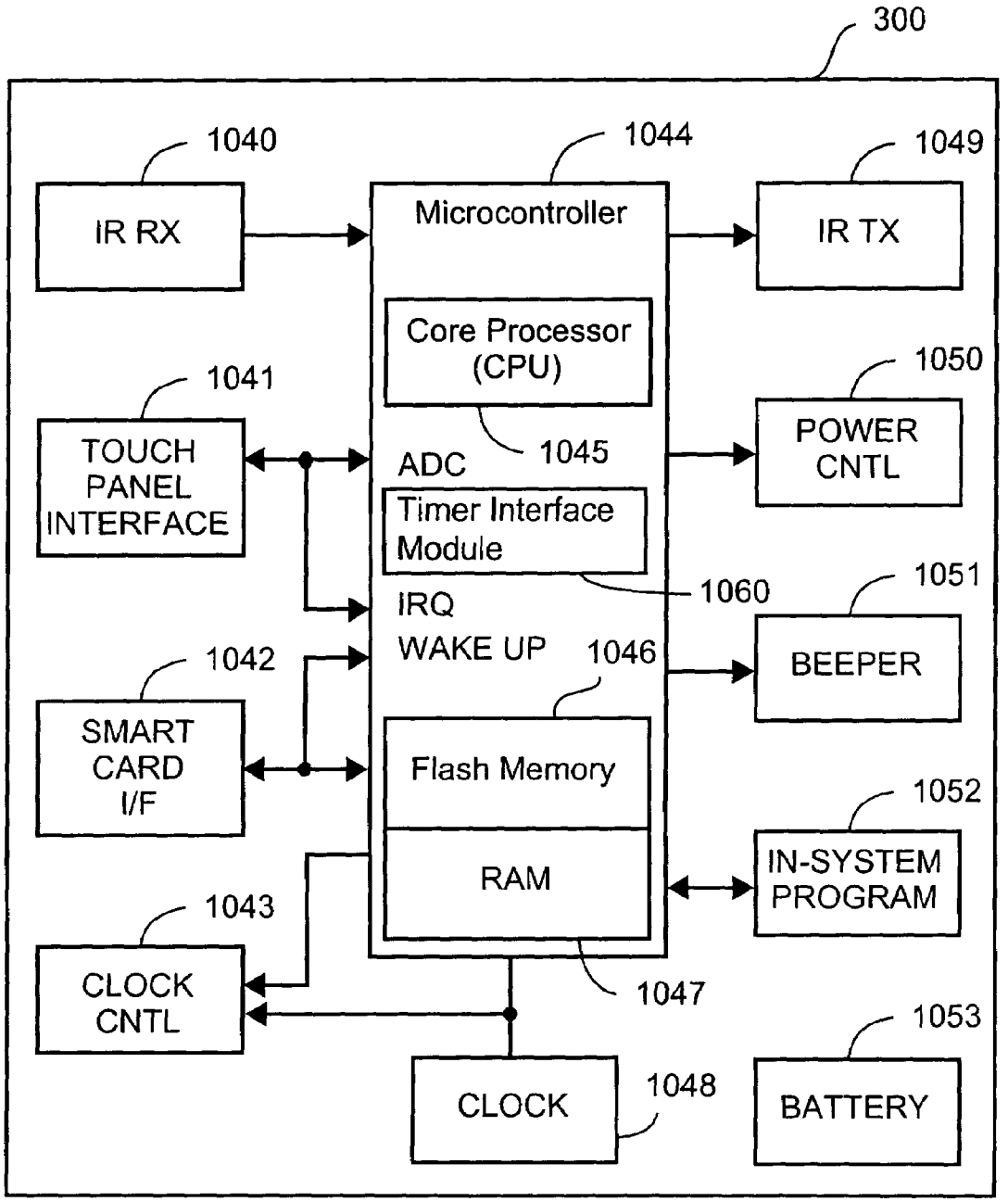
300
1040
IR RX
1044
Microcontroller
1049
IR TX
Core Processor (CPU)
1041
TOUCH PANEL INTERFACE
ADC
1045
1050
POWER CNTL
Timer Interface Module
1060
IRQ
WAKE UP
1046
1051
BEEPER
1042
SMART CARD I/F
Flash Memory
RAM
1052
IN-SYSTEM PROGRAM
1043
CLOCK CNTL
1047
1053
CLOCK
1048
BATTERY

Fig. 10

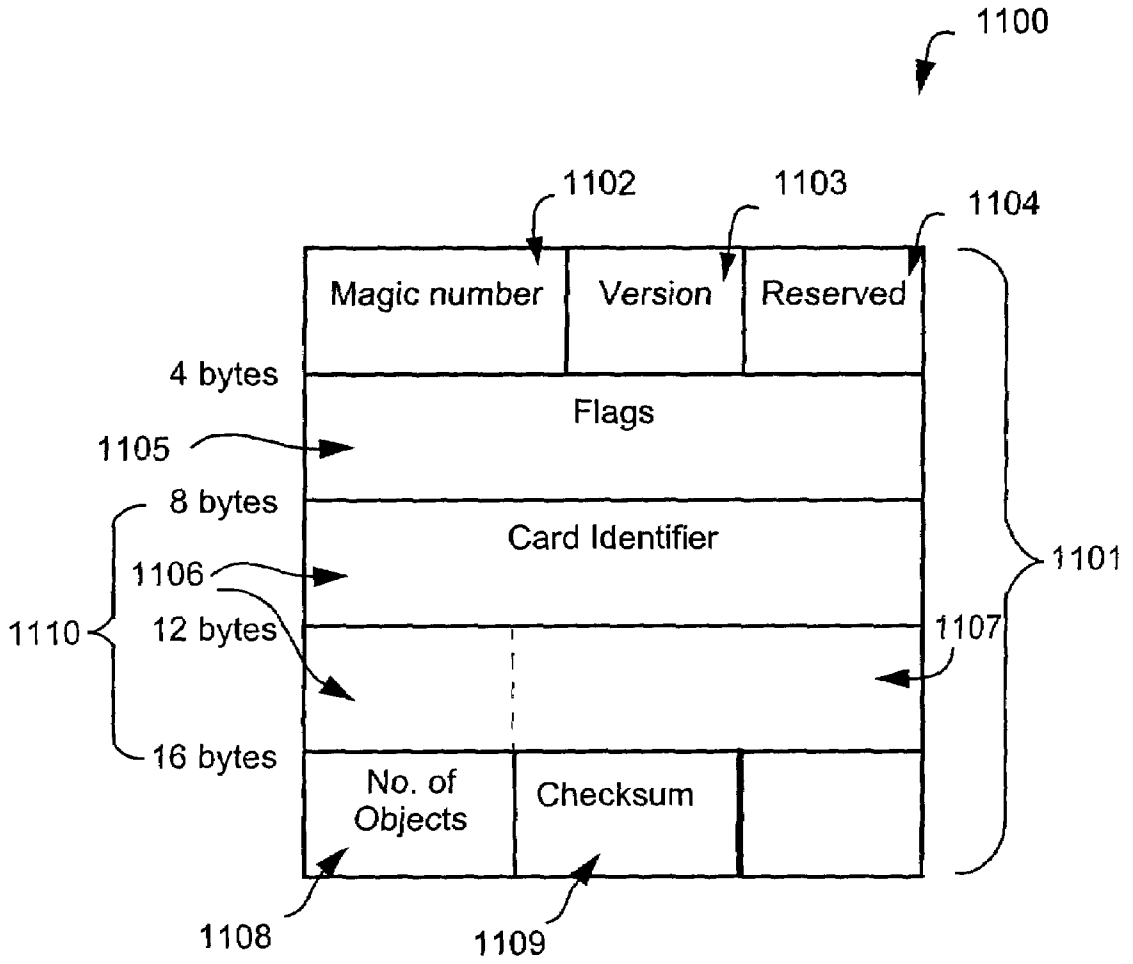
1100
1102
1103
1104
Magic number
Version
Reserved
4 bytes
Flags
1105
8 bytes
Card Identifier
1106
1110
12 bytes
1107
1101
16 bytes
No. of Objects
Checksum
1108
1109

Fig. 11

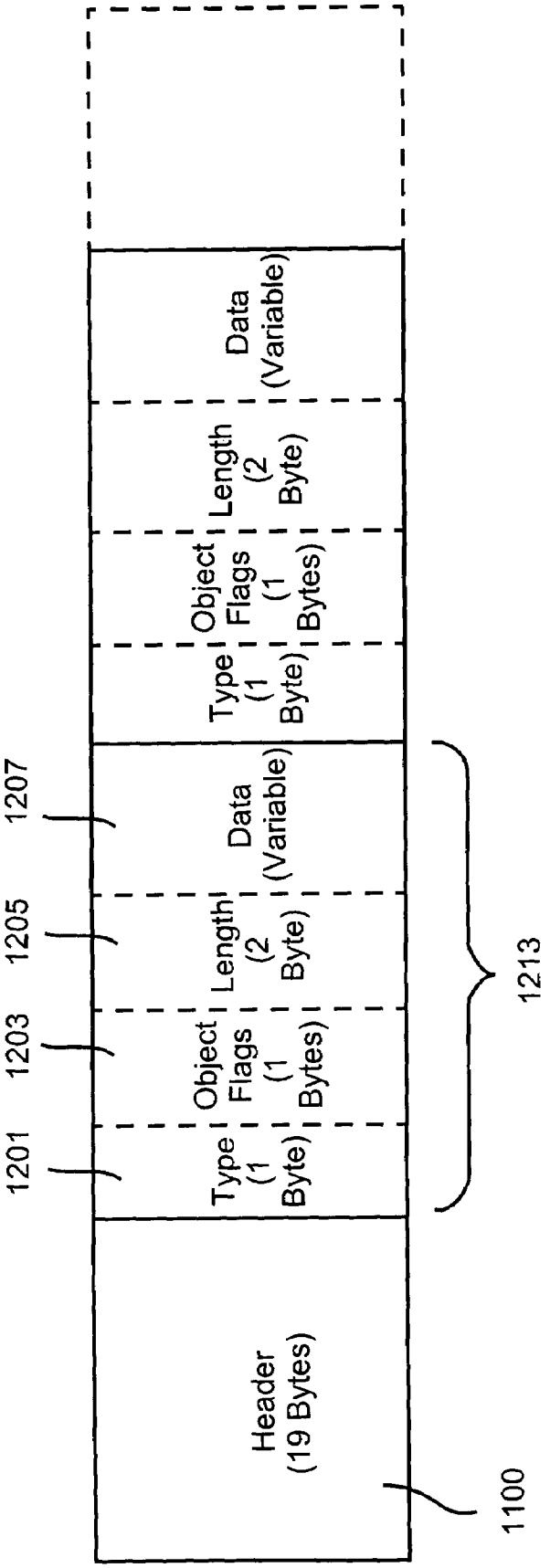
Header
(19 Bytes)
1100
1201
Type
(1
Byte)
1203
Object
Flags
(1
Bytes)
1205
Length
(2
Byte)
1207
Data
(Variable)
1213
Type
(1
Byte)
Object
Flags
(1
Bytes)
Length
(2
Byte)
Data
(Variable)

Fig. 12

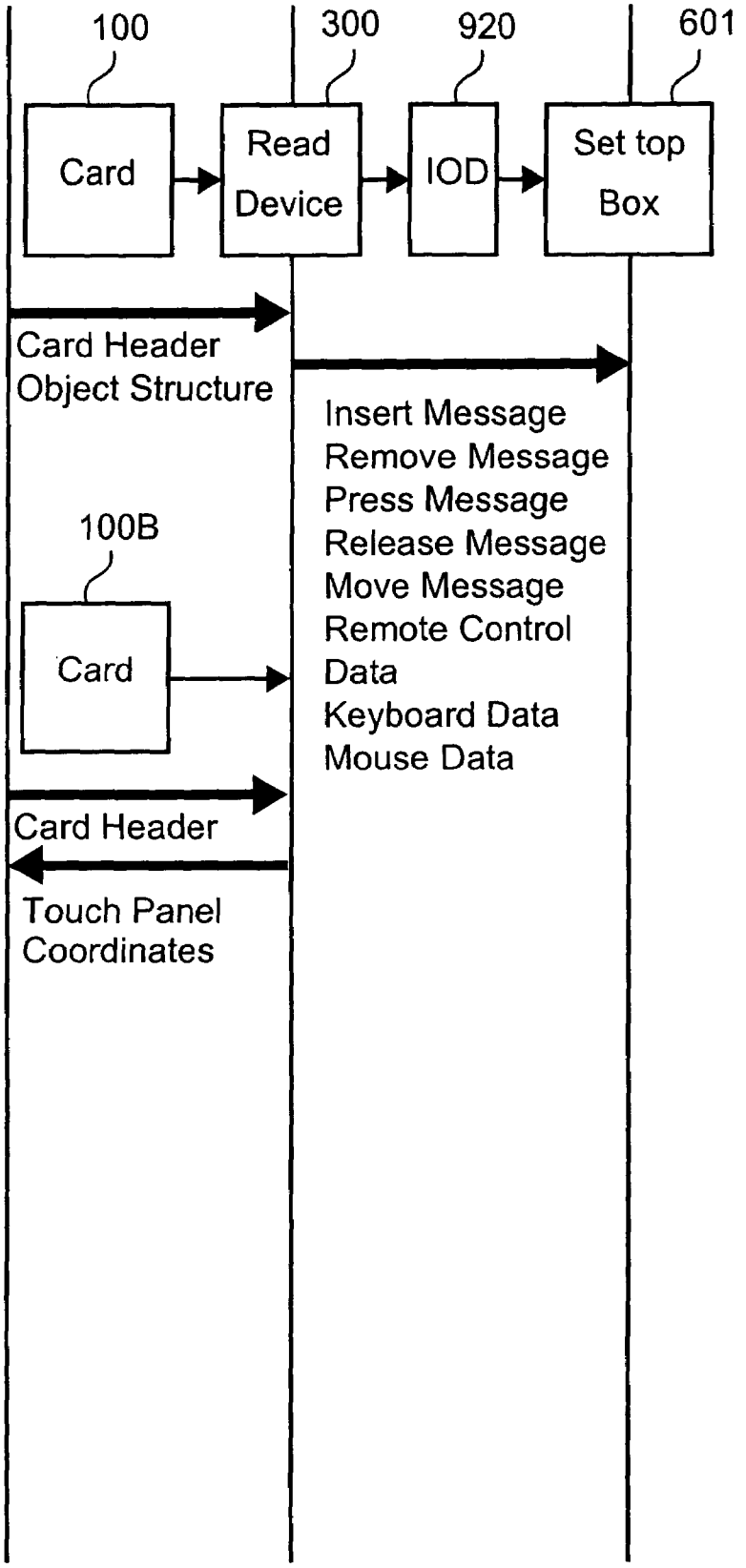
100
300
920
601
Card
Read Device
IOD
Set top Box
Card Header
Object Structure
Insert Message
Remove Message
Press Message
Release Message
Move Message
Remote Control Data
Keyboard Data
Mouse Data
100B
Card
Card Header
Touch Panel Coordinates

Fig. 13

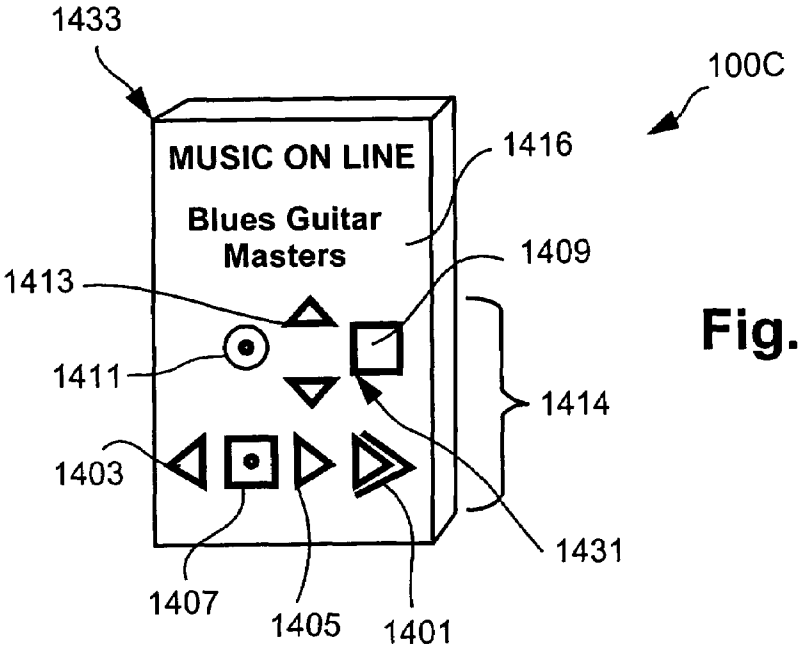

Fig. 14(a)

Fig. 14(b)

User Interface Element	User Interface Element Object Fields					
	Flags	X1	Y1	X2	Y2	Data
△	0x20	0005	0005	0006	0006	xxxx
▽	0x20	0005	0007	0006	0008	xxxx
⊙	0x20	0003	0006	0004	0007	xxxx
⊡	0x20	0003	0008	0004	0009	xxxx
▷	0x20	0005	0008	0006	0009	xxxx
◁	0x20	0001	0008	0002	0009	xxxx
▷▷	0x20	0007	0008	0008	0009	xxxx
□	0x20	0007	0006	0008	0007	0015

1409 1420 1421 1422 1431 1423 1424 1425

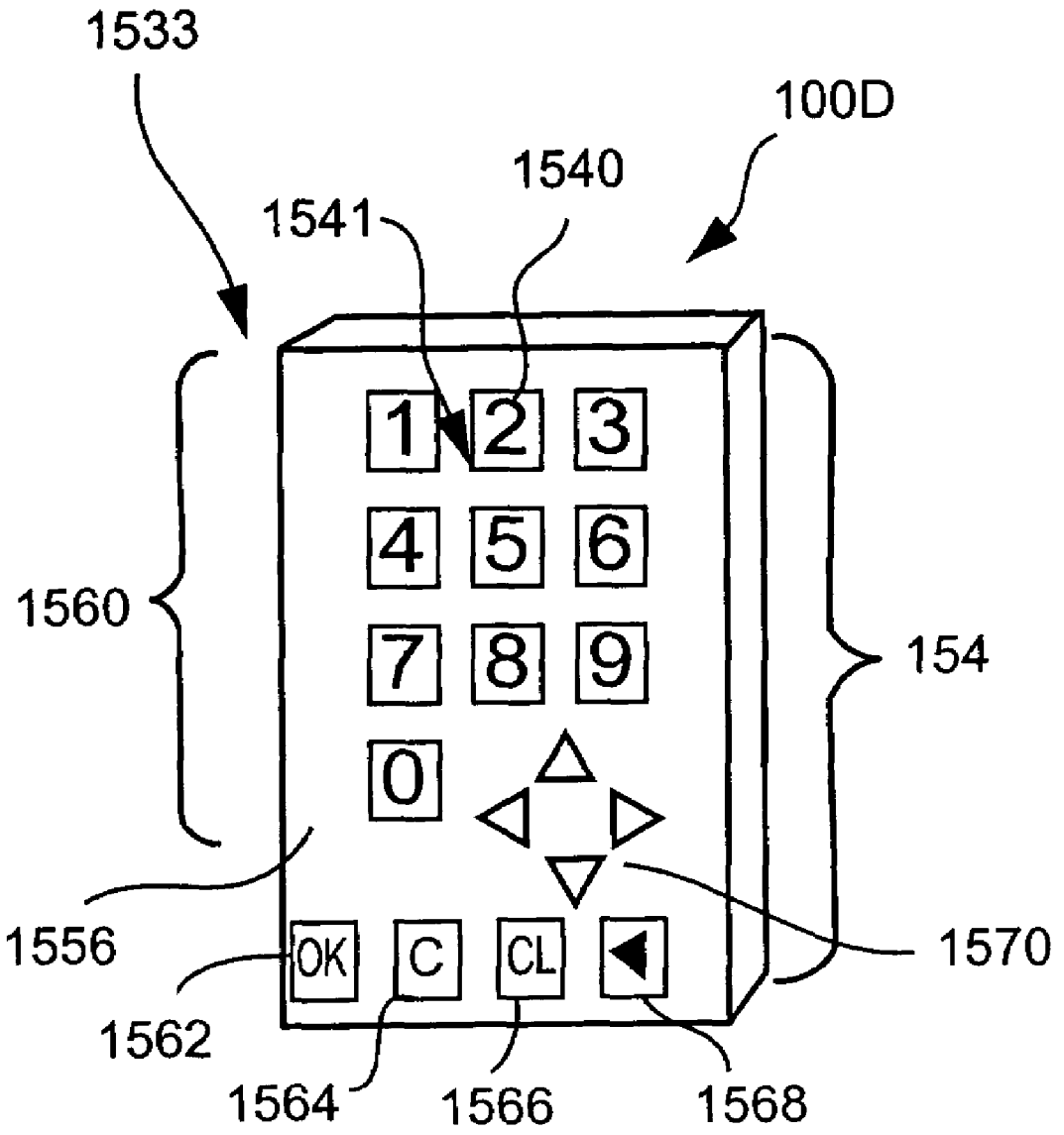
1533
100D
1540
1541
1560
154
1556
1570
1562
1564
1566
1568
1
2
3
4
5
6
7
8
9
0
OK
C
CL

Fig. 15(a)

Fig. 15(b)

1531

1540 1520 1521 1522 1523 1524 1525

User Interface Element	User Interface Element Object Fields					
	Flags	X1	Y1	X2	Y2	Data
1	0x20	0003	0001	0004	0002	xxxx
2	0x20	0005	0001	0006	0002	0x32
3	0x20	0007	0001	0008	0002	xxxx
4	0x20	0003	0003	0004	0004	xxxx
5	0x20	0005	0003	0006	0004	xxxx
6	0x20	0007	0003	0008	0004	xxxx
7	0x20	0003	0004	0004	0005	xxxx
8	0x20	0005	0004	0006	0005	xxxx
9	0x20	0007	0004	0008	0005	xxxx
0	0x20	0003	0006	0004	0007	xxxx
OK	0x20	0001	0008	0002	000A	xxxx
C	0x20	0003	0008	0004	000A	xxxx
CL	0x20	0005	0008	0006	000A	xxxx
◀	0x20	0007	0008	0008	000A	xxxx
▷	0x20	0007	0006	0008	0007	xxxx
◁	0x20	0005	0006	0006	0007	xxxx
△	0x20	0006	0005	0007	0006	xxxx
▽	0x20	0006	0007	0007	0008	xxxx

1531

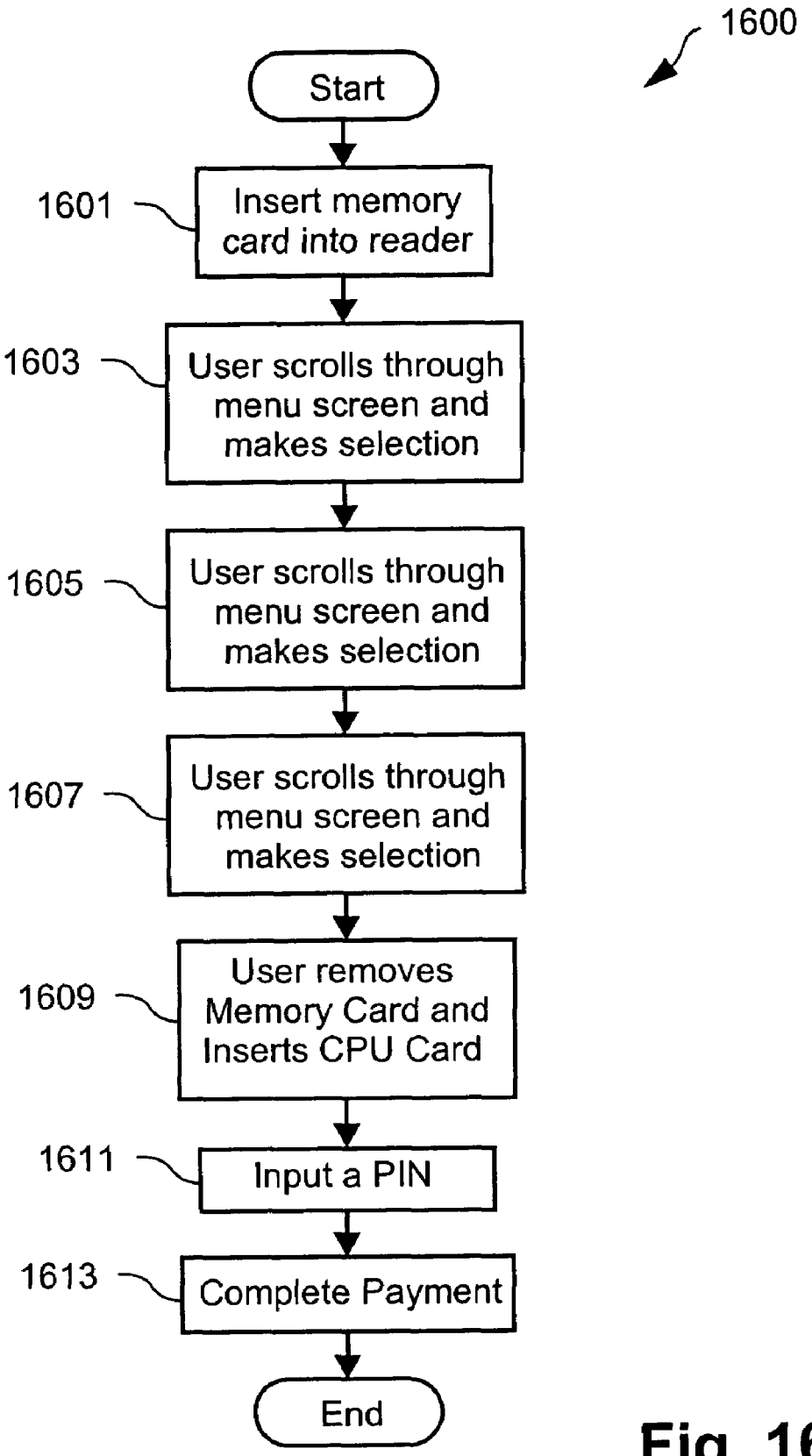
1600
Start
1601
Insert memory card into reader
1603
User scrolls through menu screen and makes selection
1605
User scrolls through menu screen and makes selection
1607
User scrolls through menu screen and makes selection
1609
User removes Memory Card and Inserts CPU Card
1611
Input a PIN
1613
Complete Payment
End

Fig. 16

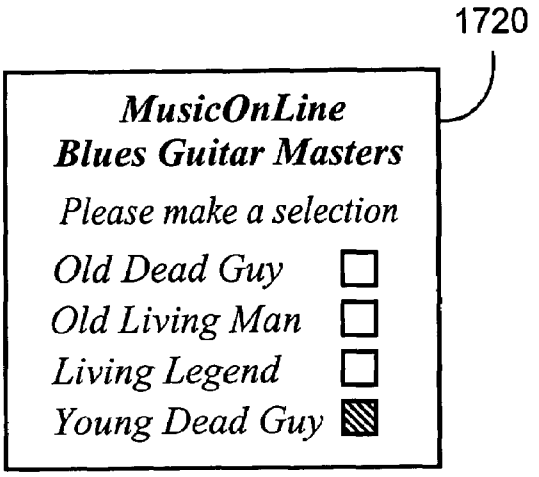

Fig. 17(a)

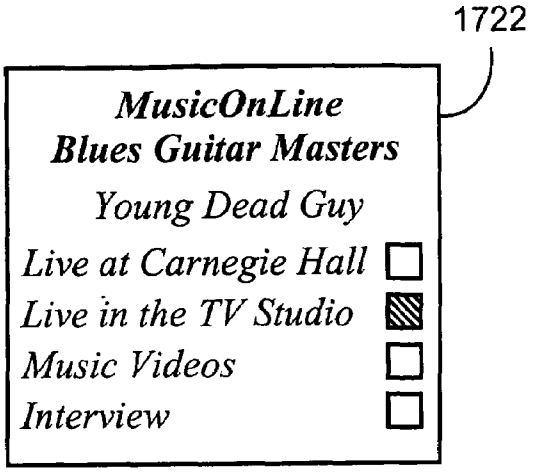

Fig. 17(b)

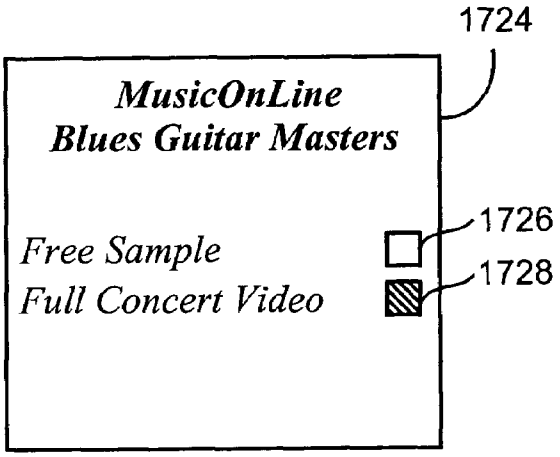

Fig. 17(c)

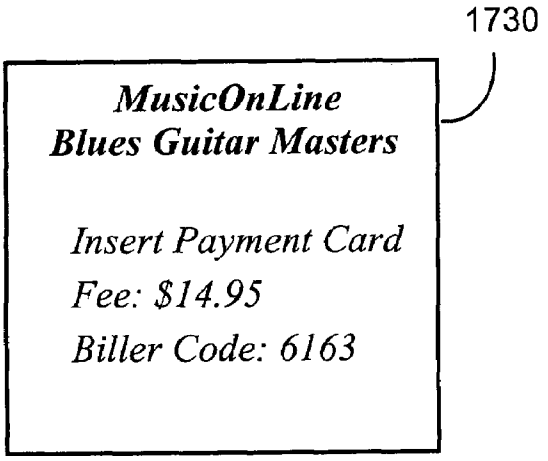

Fig. 17(d)

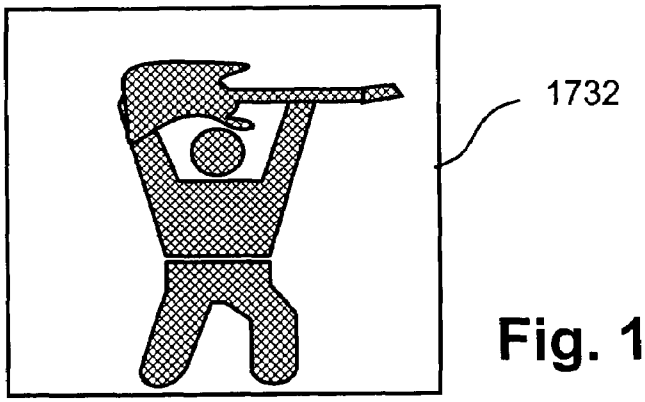

Fig. 17(e)

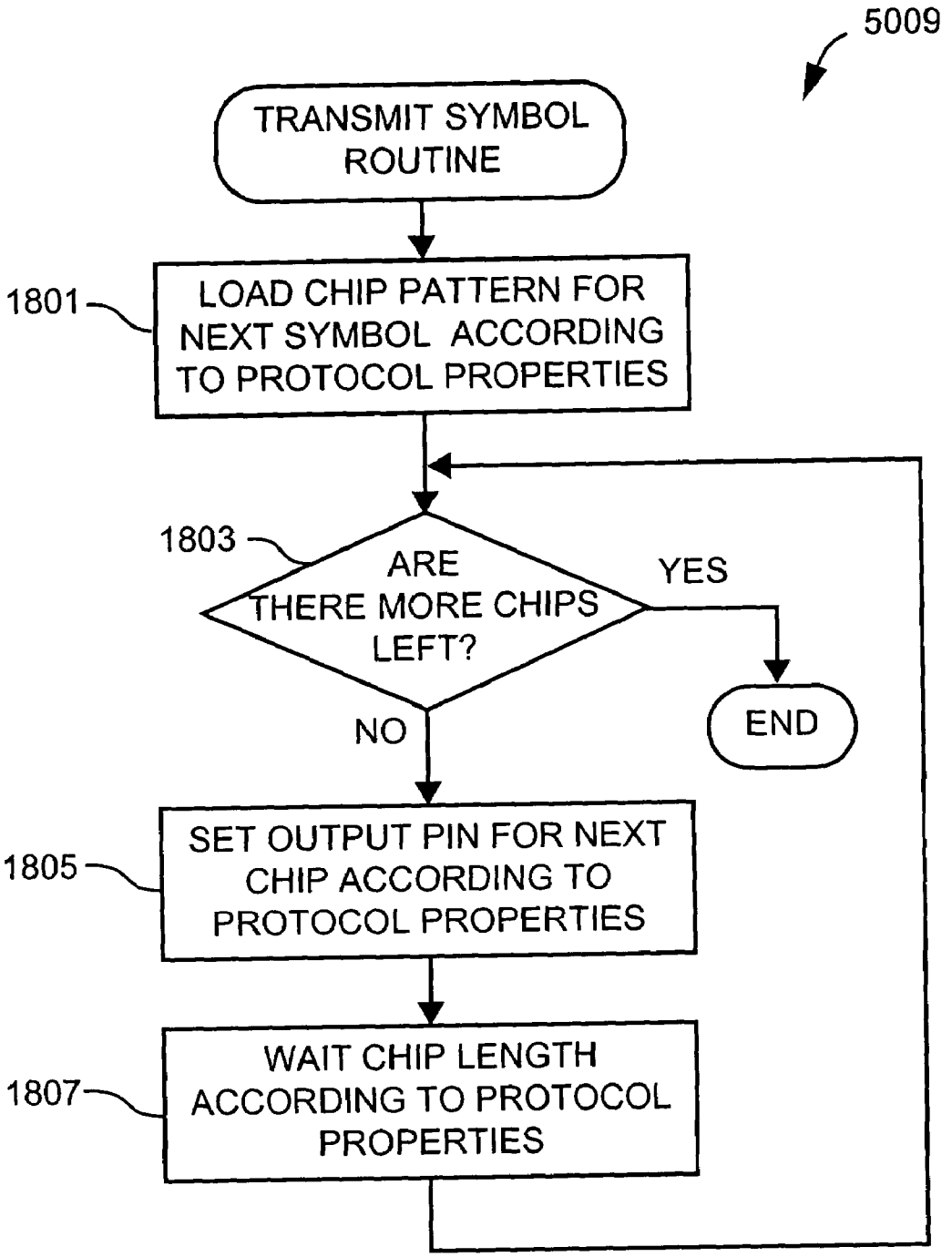
5009
TRANSMIT SYMBOL ROUTINE
1801
LOAD CHIP PATTERN FOR NEXT SYMBOL ACCORDING TO PROTOCOL PROPERTIES
1803
ARE THERE MORE CHIPS LEFT?
YES
END
NO
1805
SET OUTPUT PIN FOR NEXT CHIP ACCORDING TO PROTOCOL PROPERTIES
1807
WAIT CHIP LENGTH ACCORDING TO PROTOCOL PROPERTIES

Fig. 18

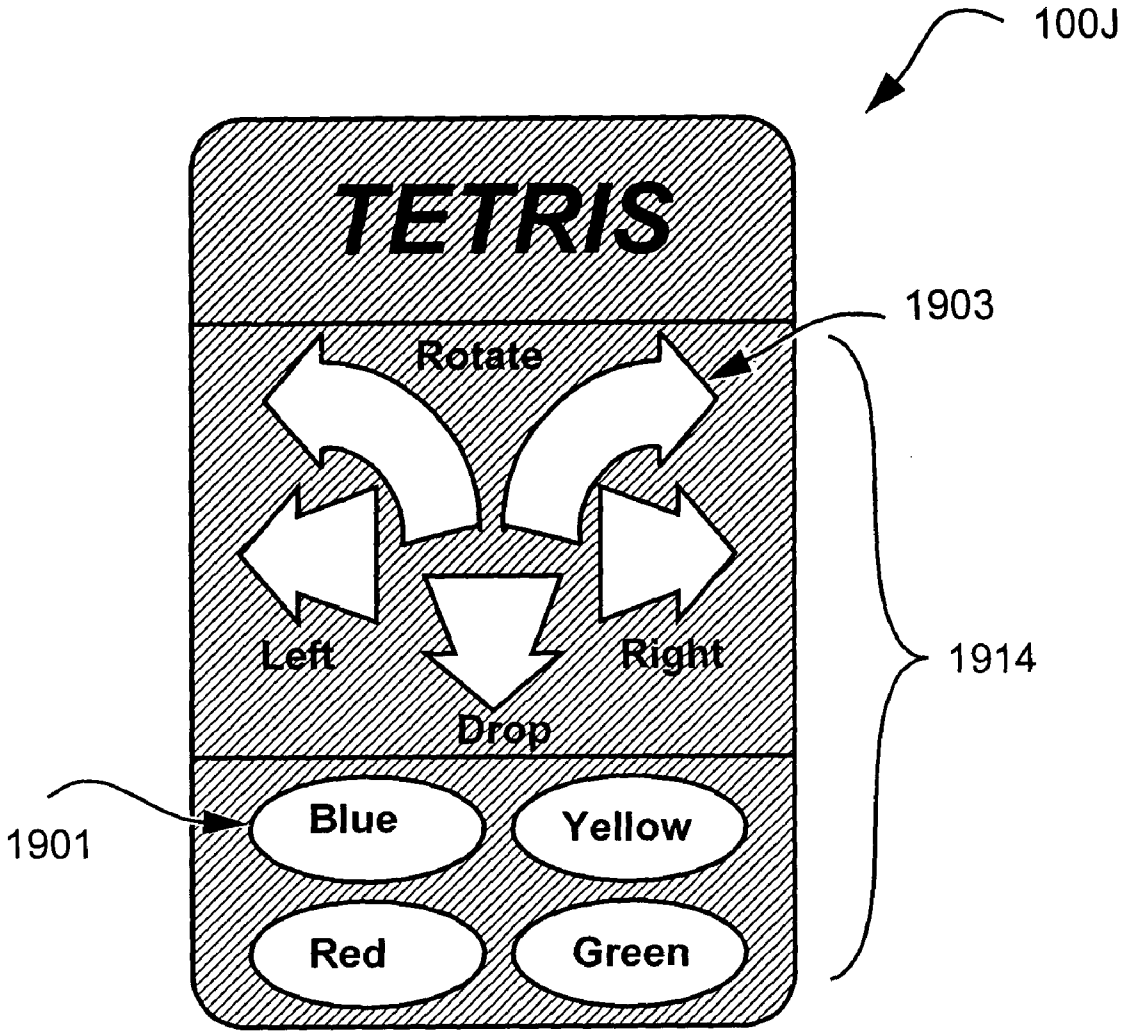
100J
TETRIS
1903
Rotate
Left
Right
Drop
1914
1901
Blue
Yellow
Red
Green

Fig. 19

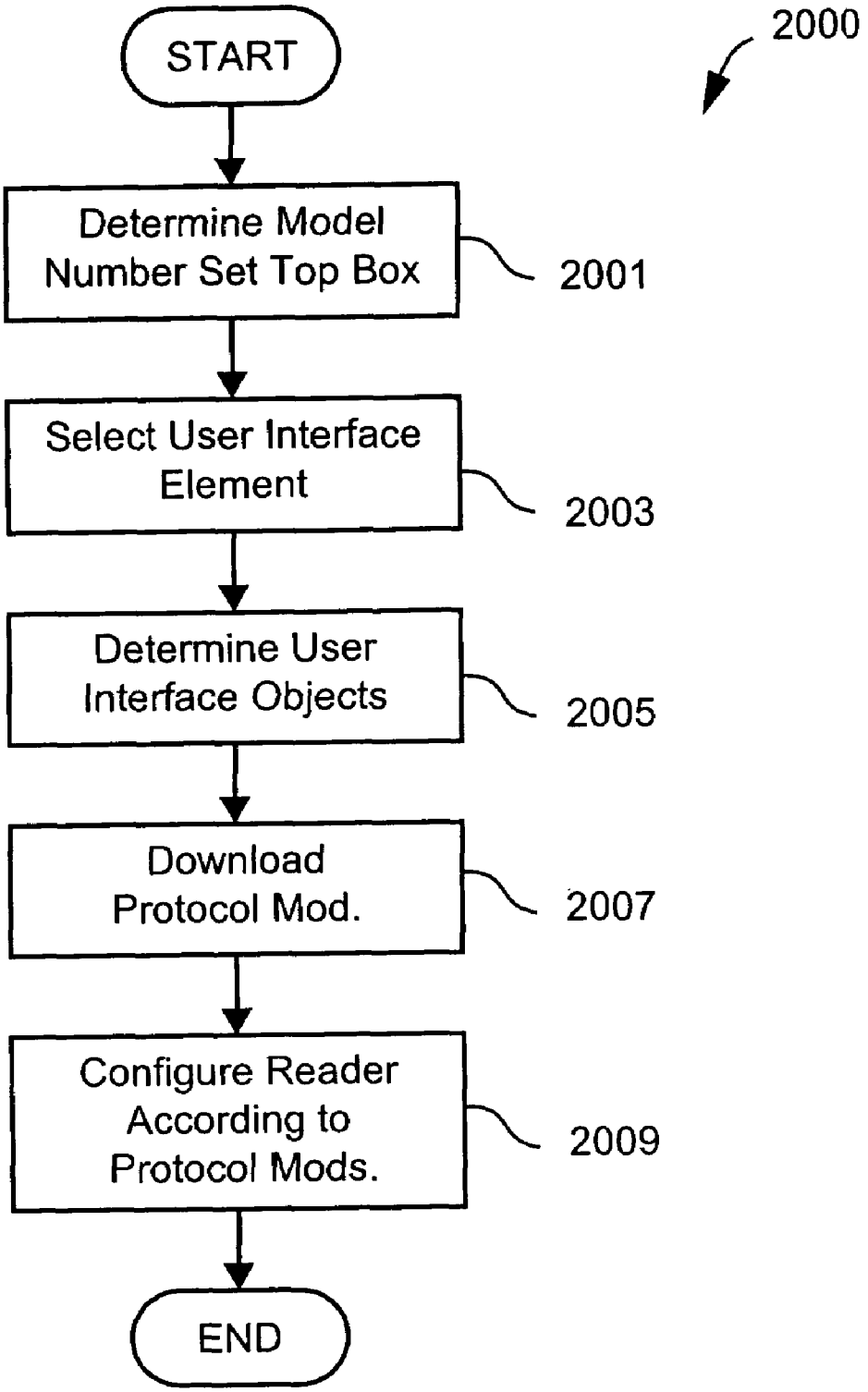
2000
START
Determine Model Number Set Top Box
2001
Select User Interface Element
2003
Determine User Interface Objects
2005
Download Protocol Mod.
2007
Configure Reader According to Protocol Mods.
2009
END

Fig. 20

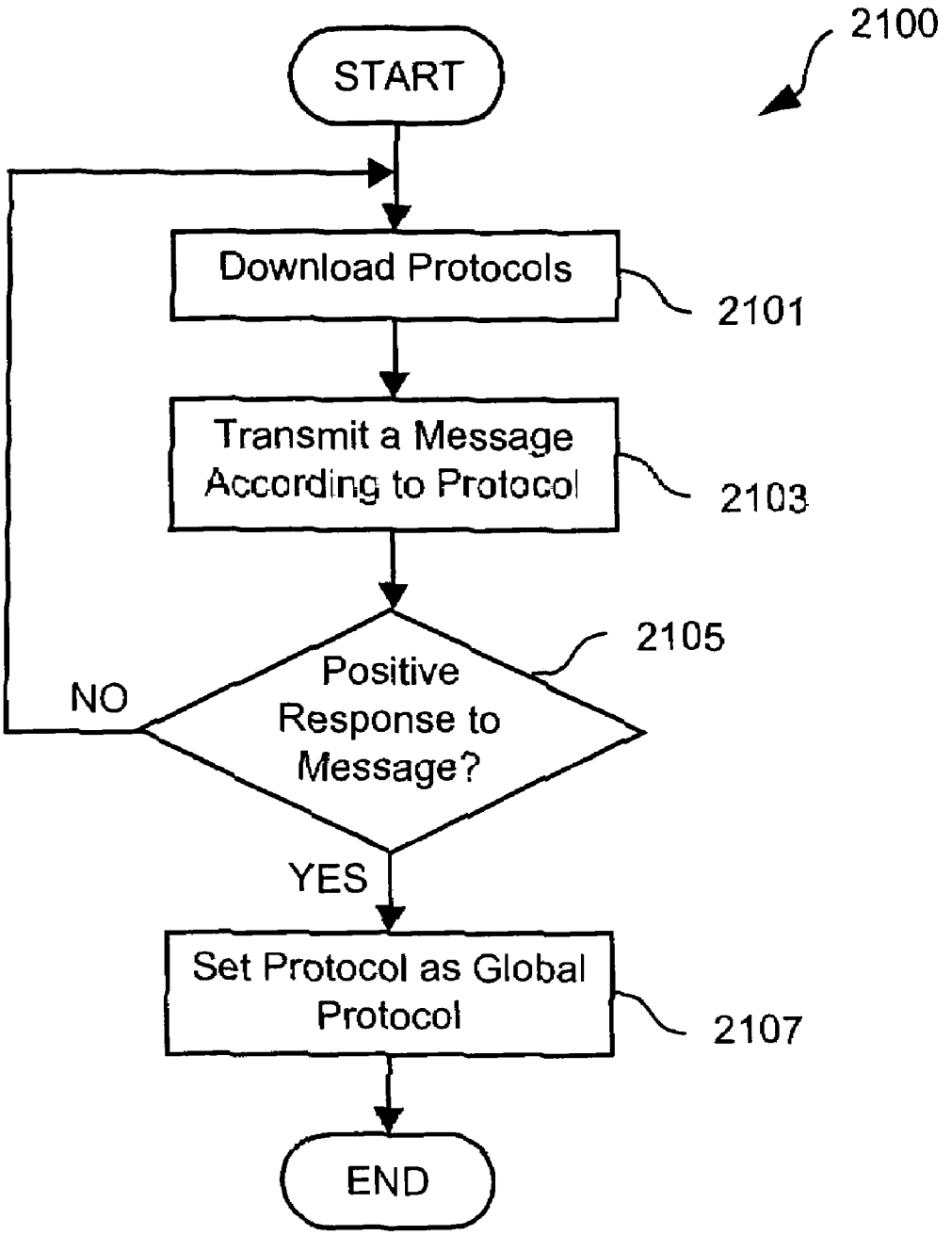
2100
START
Download Protocols
2101
Transmit a Message According to Protocol
2103
Positive Response to Message?
2105
NO
YES
Set Protocol as Global Protocol
2107
END

Fig. 21

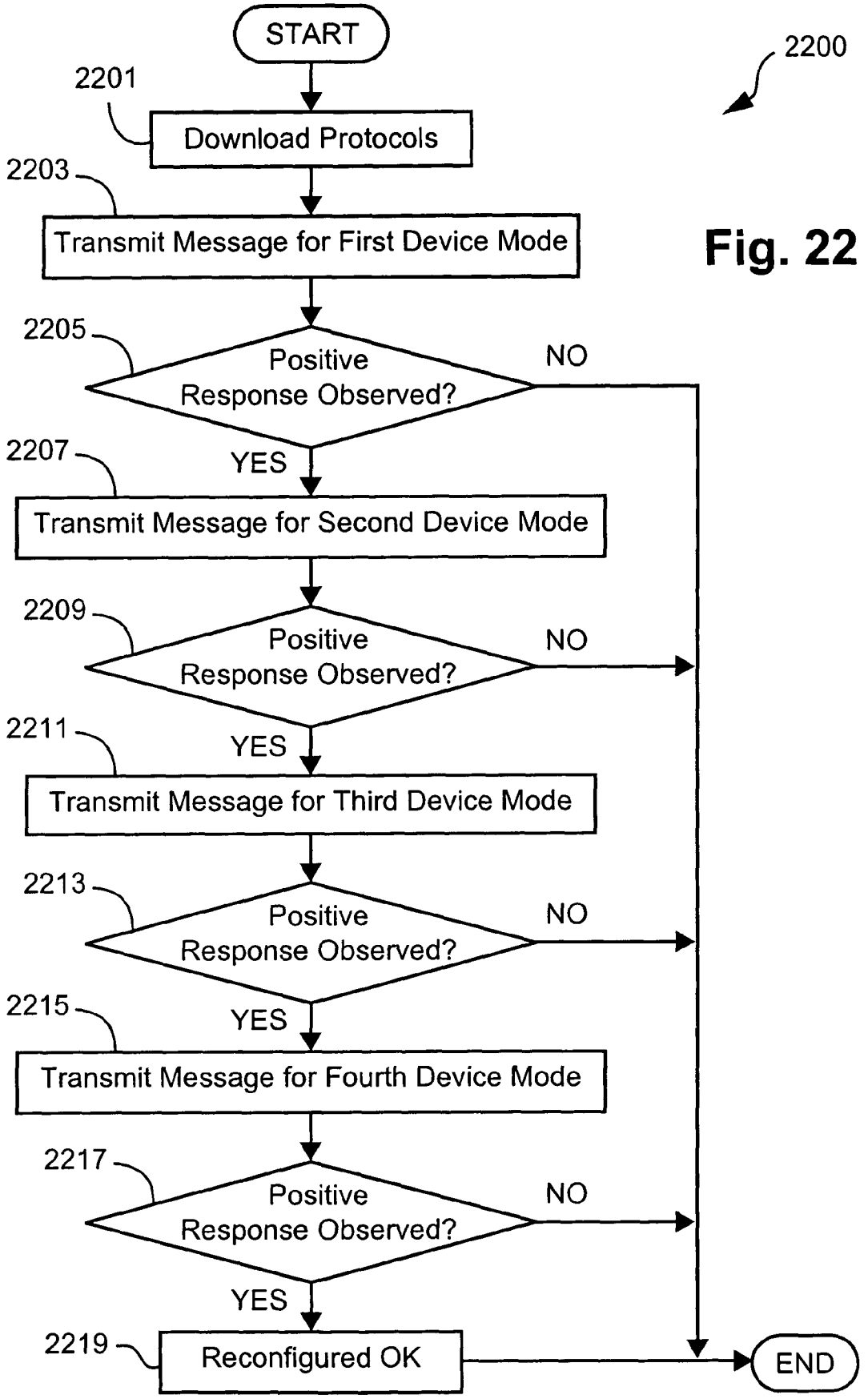
START
2200
2201
Download Protocols
2203
Transmit Message for First Device Mode
2205
Positive Response Observed?
NO
YES
2207
Transmit Message for Second Device Mode
2209
Positive Response Observed?
NO
YES
2211
Transmit Message for Third Device Mode
2213
Positive Response Observed?
NO
YES
2215
Transmit Message for Fourth Device Mode
2217
Positive Response Observed?
NO
YES
2219
Reconfigured OK
END

Fig. 22

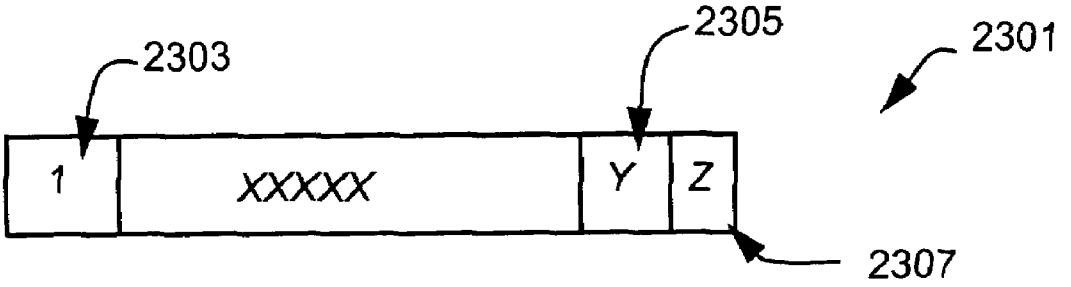

Fig. 23(a)

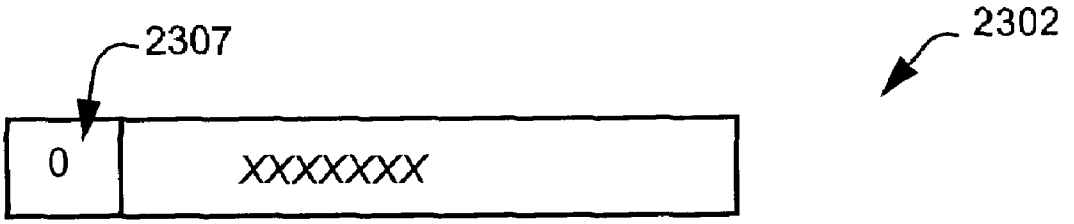

Fig. 23(b)

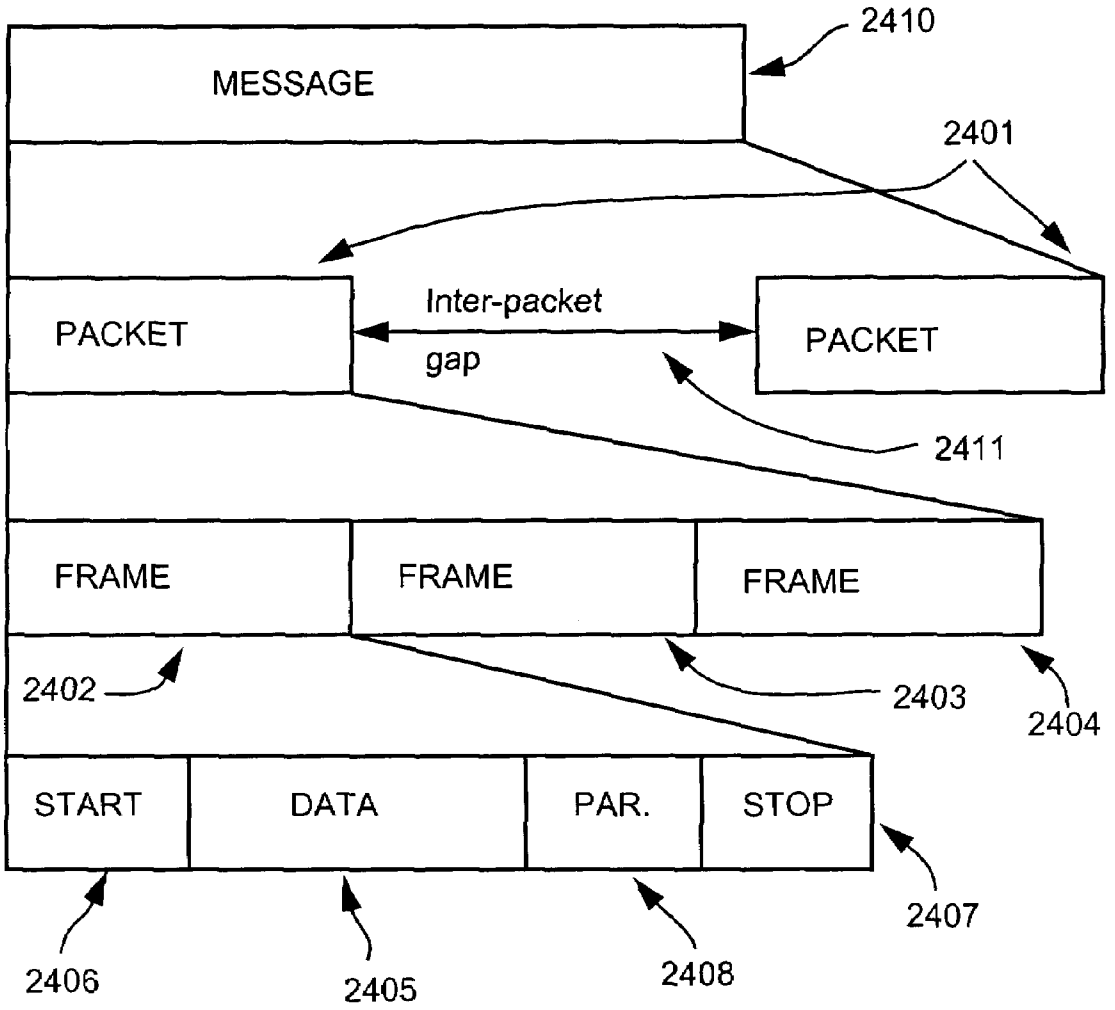
2410
MESSAGE
2401
PACKET
Inter-packet
gap
PACKET
2411
FRAME
FRAME
FRAME
2402
2403
2404
START
DATA
PAR.
STOP
2407
2406
2405
2408

Fig. 24

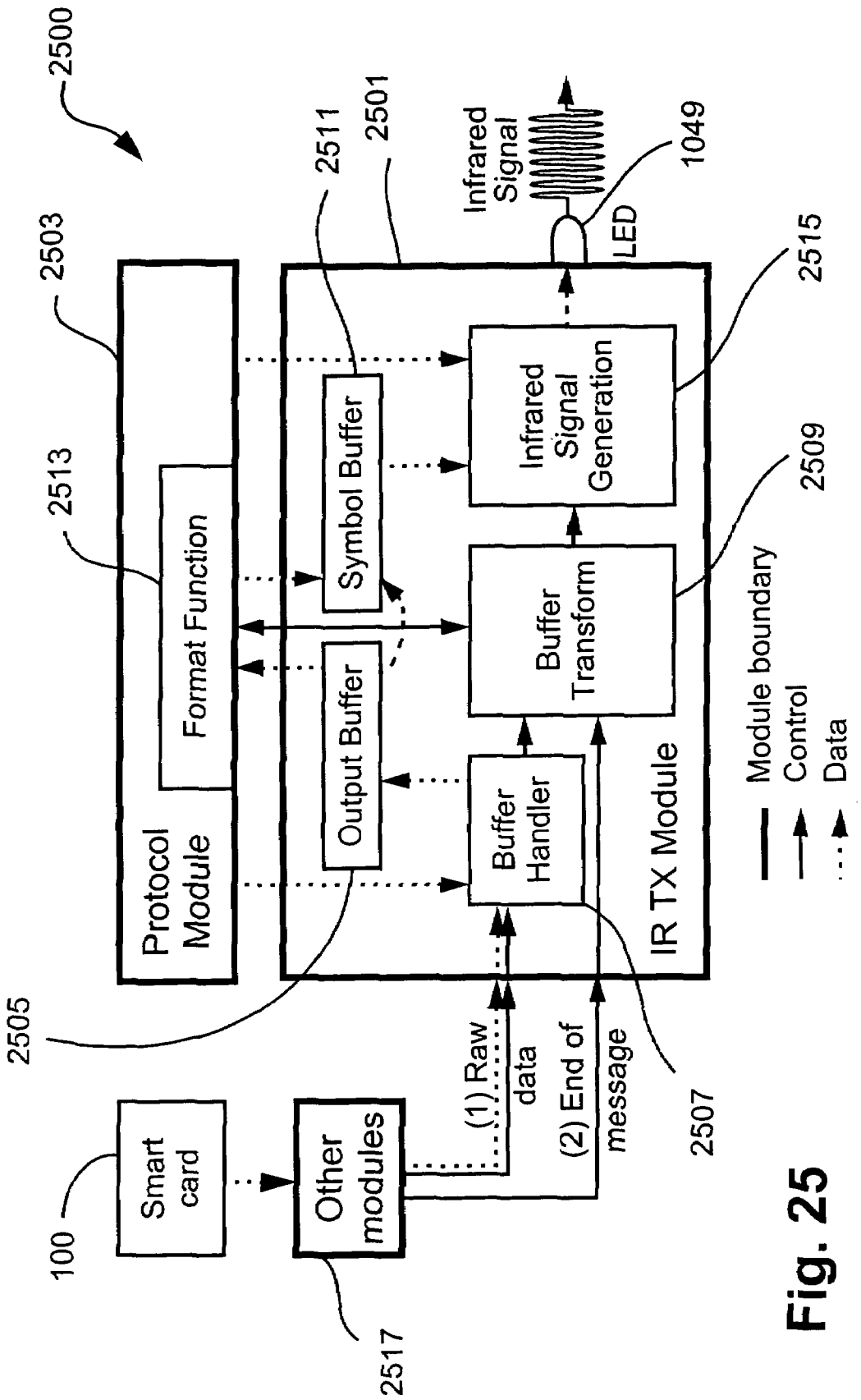
2500
2503
2513
Protocol Module
Format Function
2505
2511
2501
Symbol Buffer
Output Buffer
Infrared Signal
1049
LED
2515
Infrared Signal Generation
2509
Buffer Transform
Buffer Handler
IR TX Module
2507
Module boundary
Control
Data
100
Smart card
Other modules
2517
(1) Raw data
(2) End of message

Fig. 25

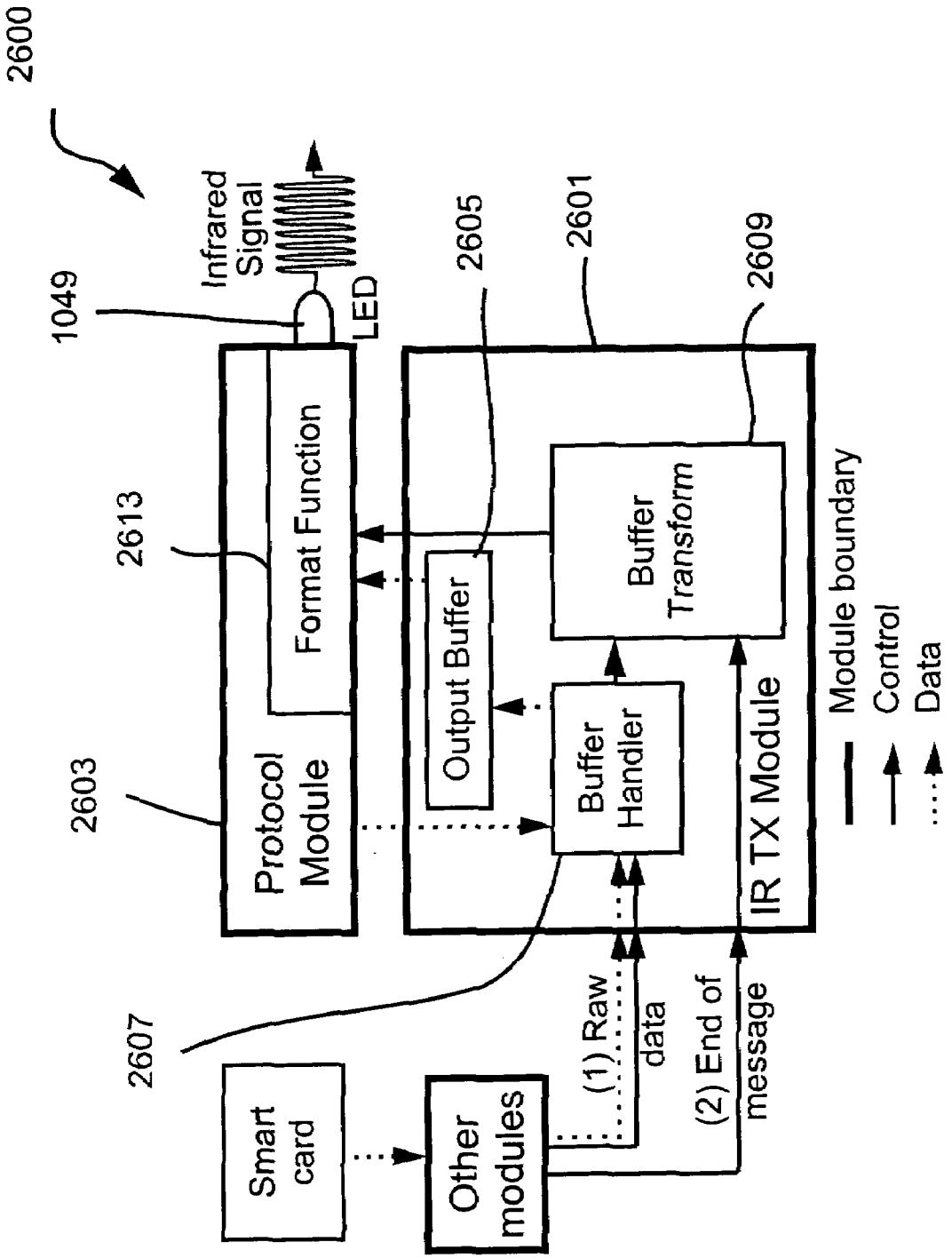
2600
1049
Infrared Signal
LED
2605
2601
2609
2613
Format Function
Output Buffer
Buffer Transform
2603
Protocol Module
Buffer Handler
IR TX Module
Module boundary
Control
Data
2607
Smart card
Other modules
(1) Raw data
(2) End of message

Fig. 26

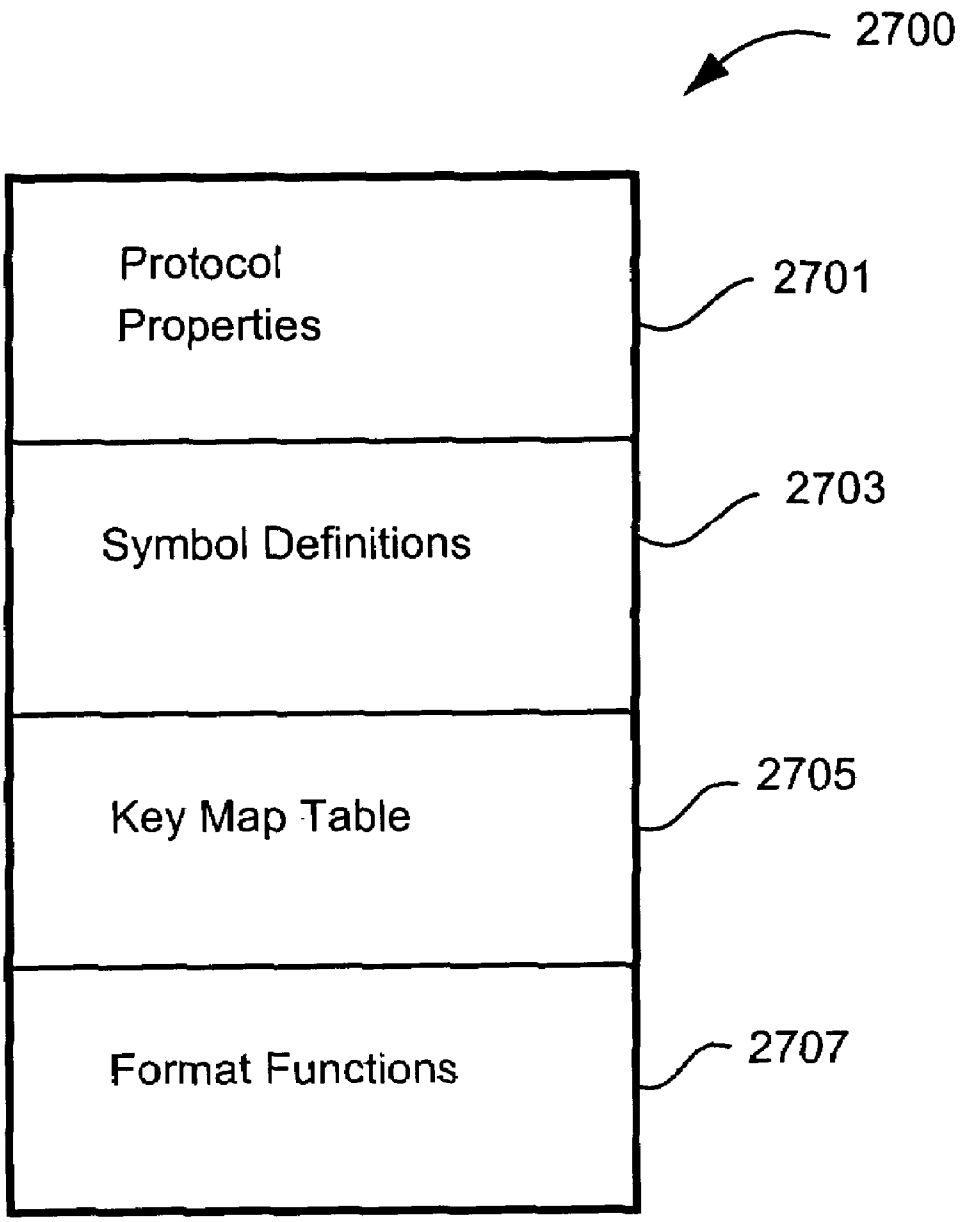
2700
Protocol Properties
2701
Symbol Definitions
2703
Key Map Table
2705
Format Functions
2707

Fig. 27

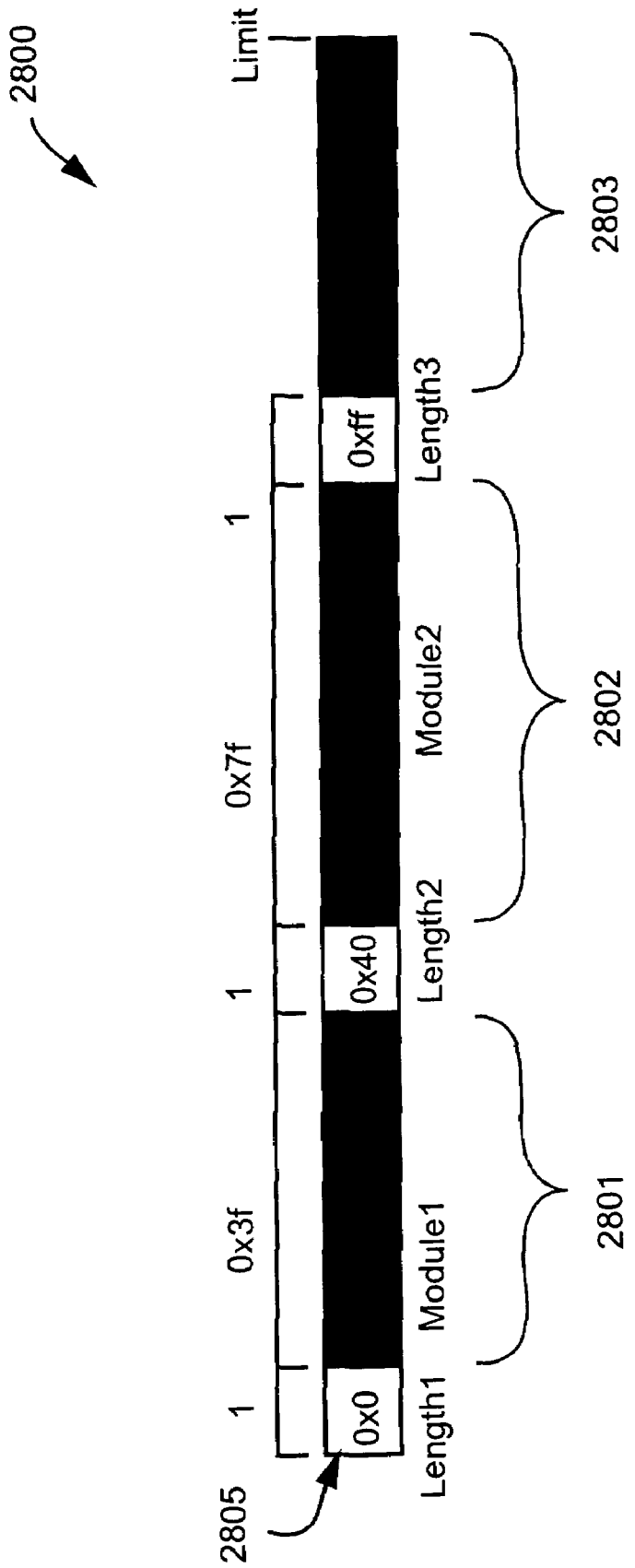
2800
2805
1
0x3f
1
0x7f
1
Limit
0x0
0x40
0xff
Length1
Module1
Length2
Module2
Length3
2801
2802
2803

Fig. 28

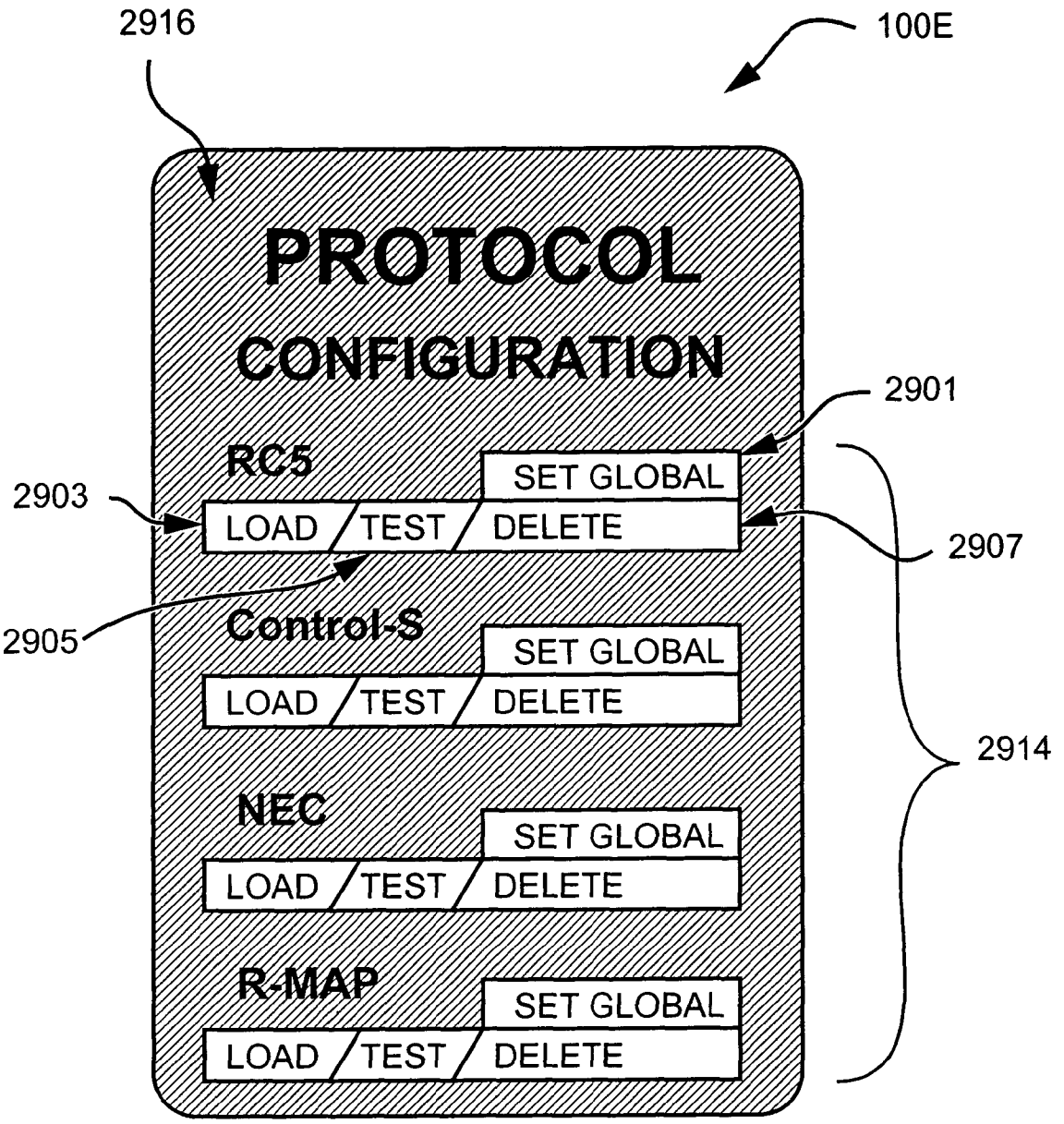
2916
100E
PROTOCOL
CONFIGURATION
2901
RC5
SET GLOBAL
2903
LOAD
TEST
DELETE
2907
2905
Control-S
SET GLOBAL
LOAD
TEST
DELETE
2914
NEC
SET GLOBAL
LOAD
TEST
DELETE
R-MAP
SET GLOBAL
LOAD
TEST
DELETE

Fig. 29

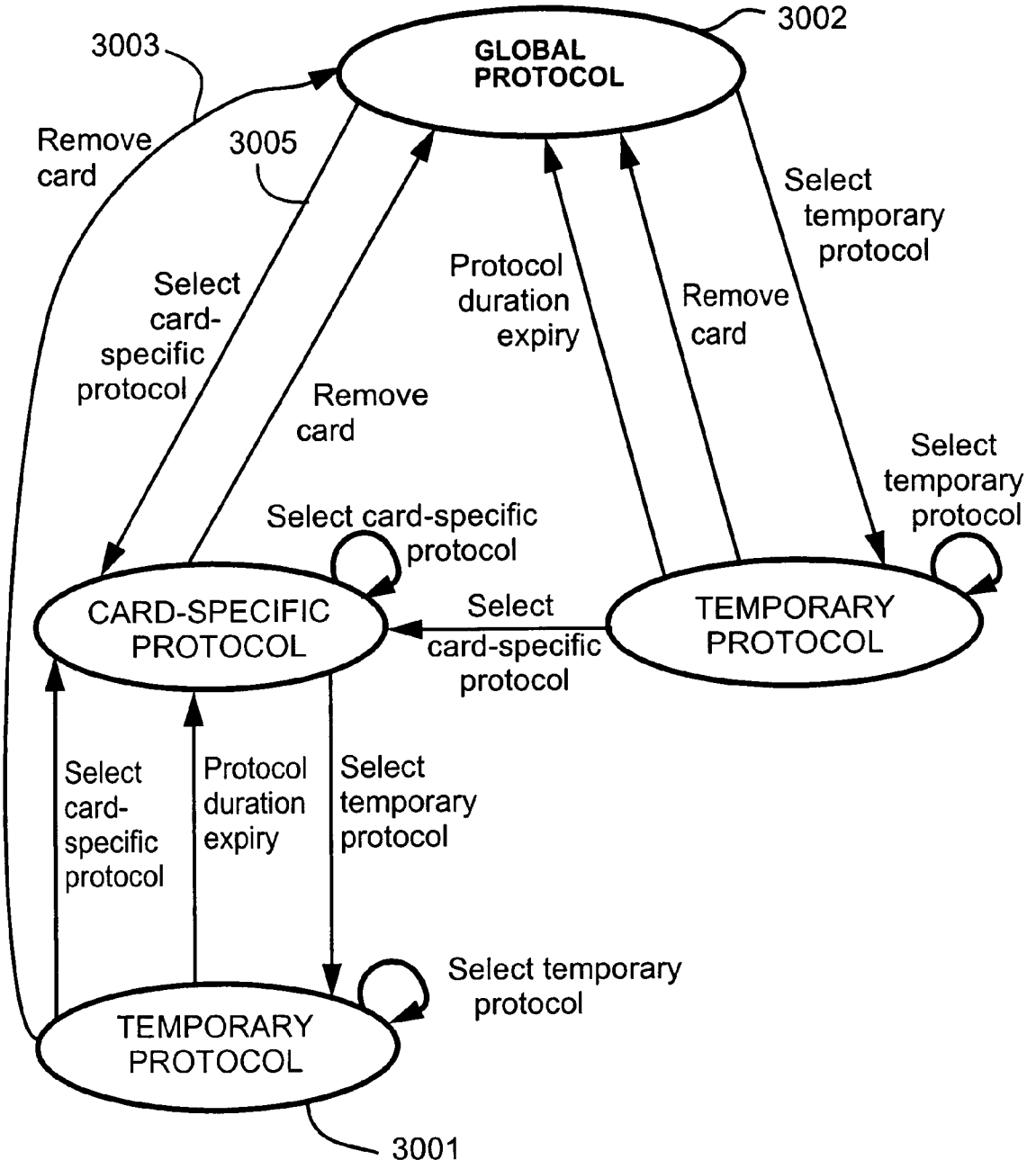
3002
3003
GLOBAL PROTOCOL
Remove card
3005
Select temporary protocol
Protocol duration expiry
Remove card
Select card-specific protocol
Remove card
Select temporary protocol
Select card-specific protocol
CARD-SPECIFIC PROTOCOL
Select card-specific protocol
TEMPORARY PROTOCOL
Select card-specific protocol
Protocol duration expiry
Select temporary protocol
Select temporary protocol
TEMPORARY PROTOCOL
3001

Fig. 30

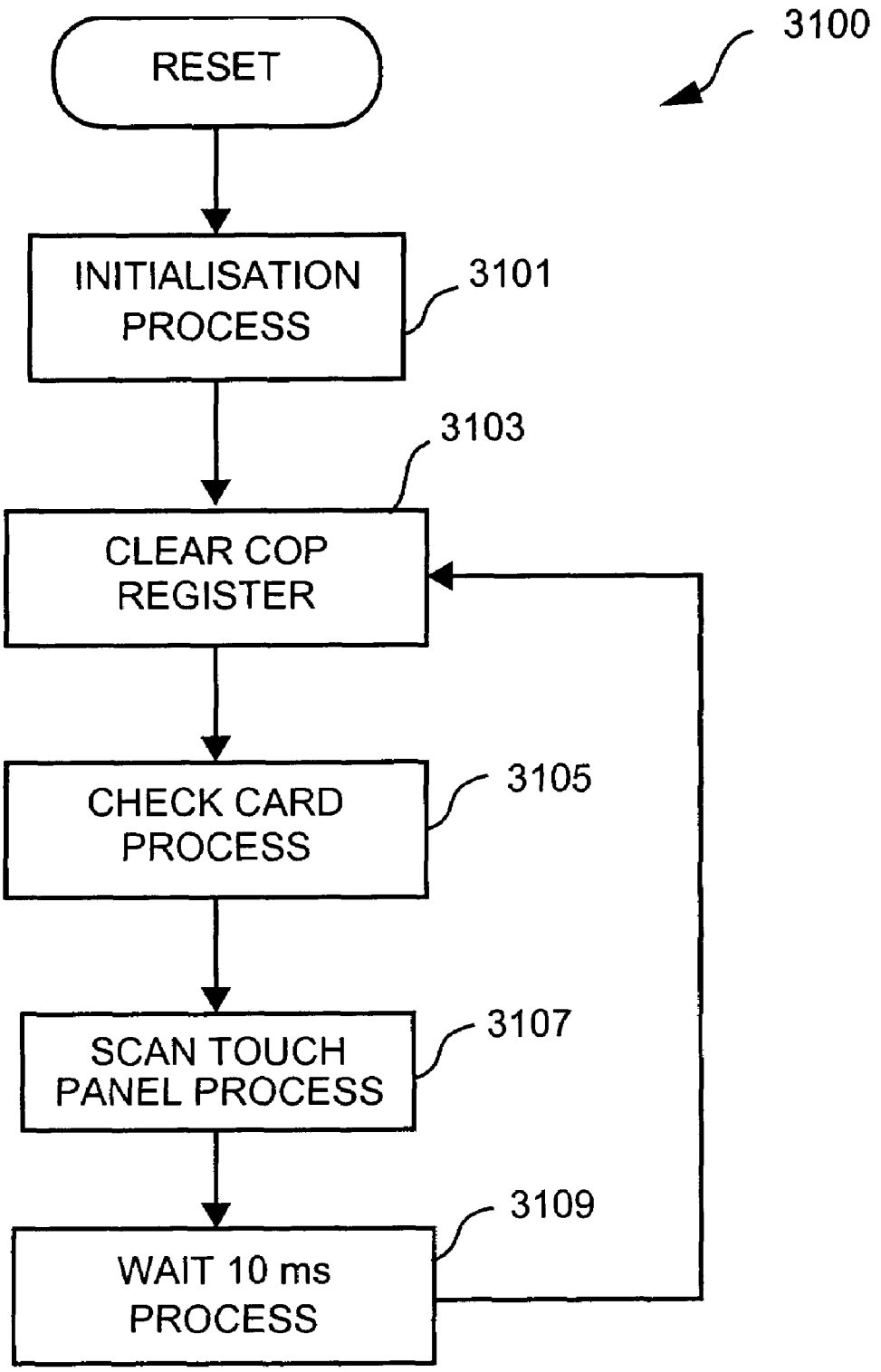
3100
RESET
INITIALISATION PROCESS
3101
3103
CLEAR COP REGISTER
CHECK CARD PROCESS
3105
SCAN TOUCH PANEL PROCESS
3107
3109
WAIT 10 ms PROCESS

Fig. 31

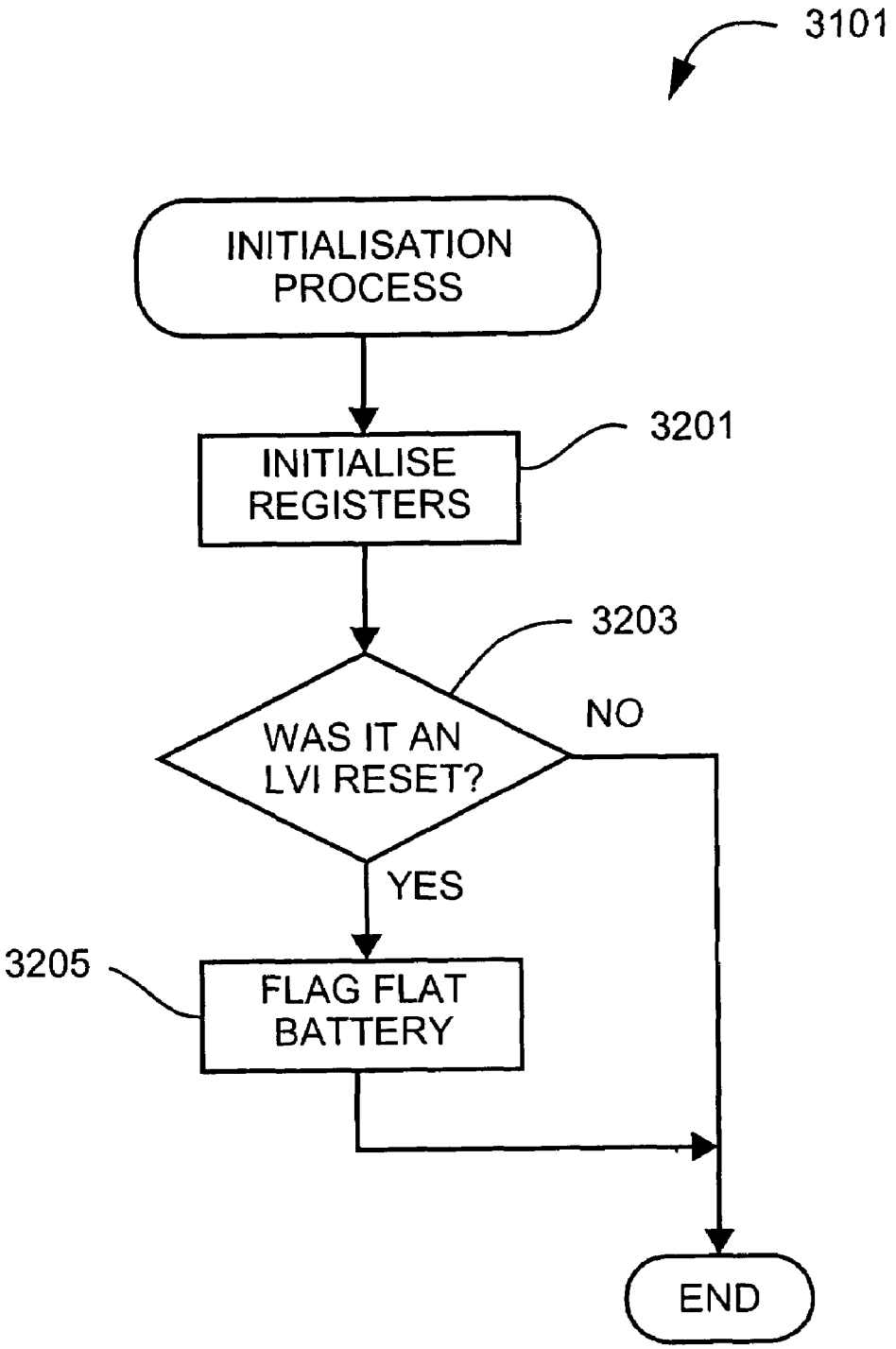
3101
INITIALISATION PROCESS
INITIALISE REGISTERS
3201
3203
WAS IT AN LVI RESET?
NO
YES
3205
FLAG FLAT BATTERY
END

Fig. 32

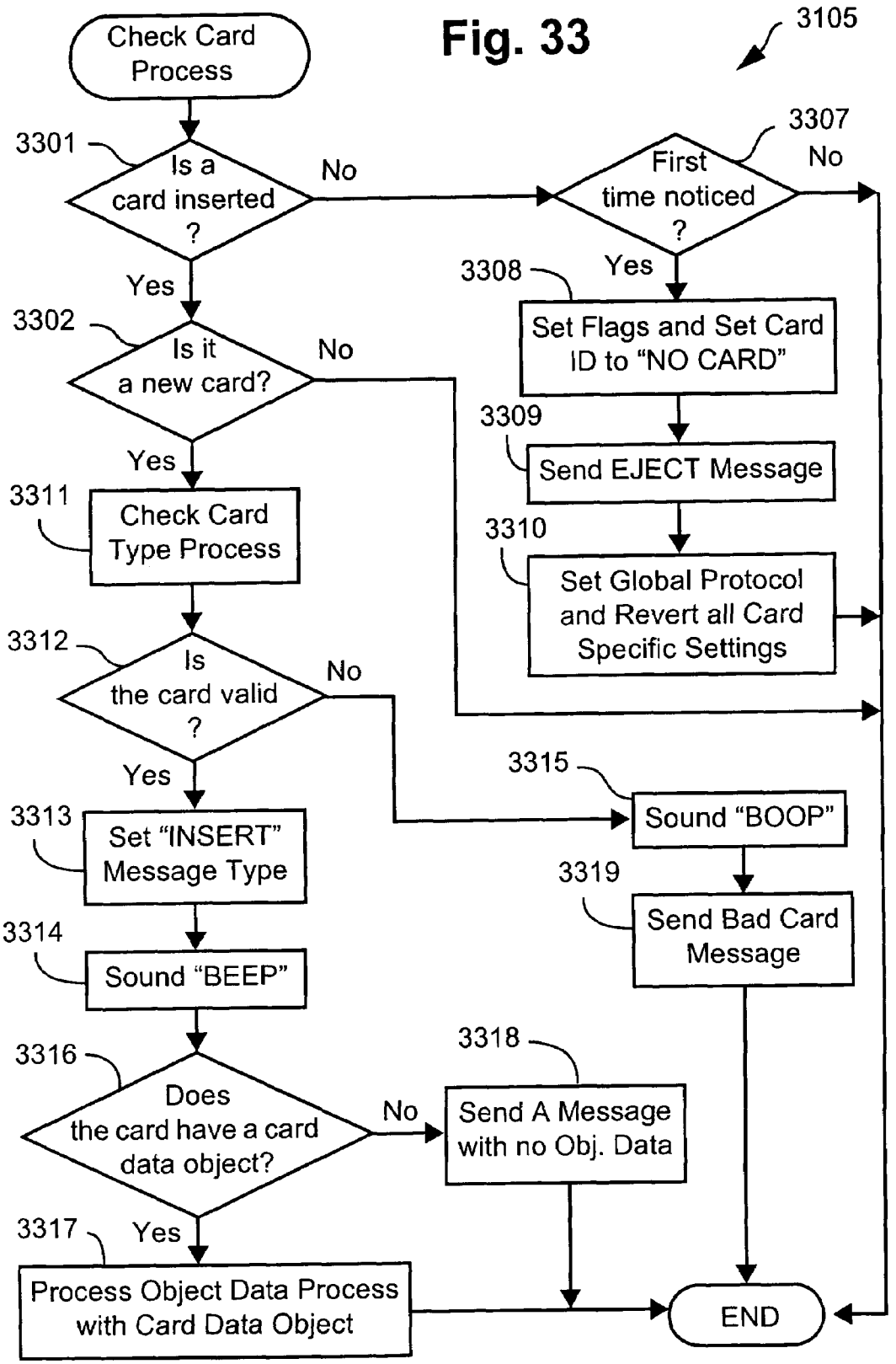
Fig. 33
3105
Check Card Process
3301
Is a card inserted ?
No
Yes
3302
Is it a new card?
No
Yes
3311
Check Card Type Process
3312
Is the card valid ?
No
Yes
3313
Set "INSERT" Message Type
3314
Sound "BEEP"
3316
Does the card have a card data object?
No
Yes
3317
Process Object Data Process with Card Data Object
3307
First time noticed ?
No
Yes
3308
Set Flags and Set Card ID to "NO CARD"
3309
Send EJECT Message
3310
Set Global Protocol and Revert all Card Specific Settings
3315
Sound "BOOP"
3319
Send Bad Card Message
3318
Send A Message with no Obj. Data
END

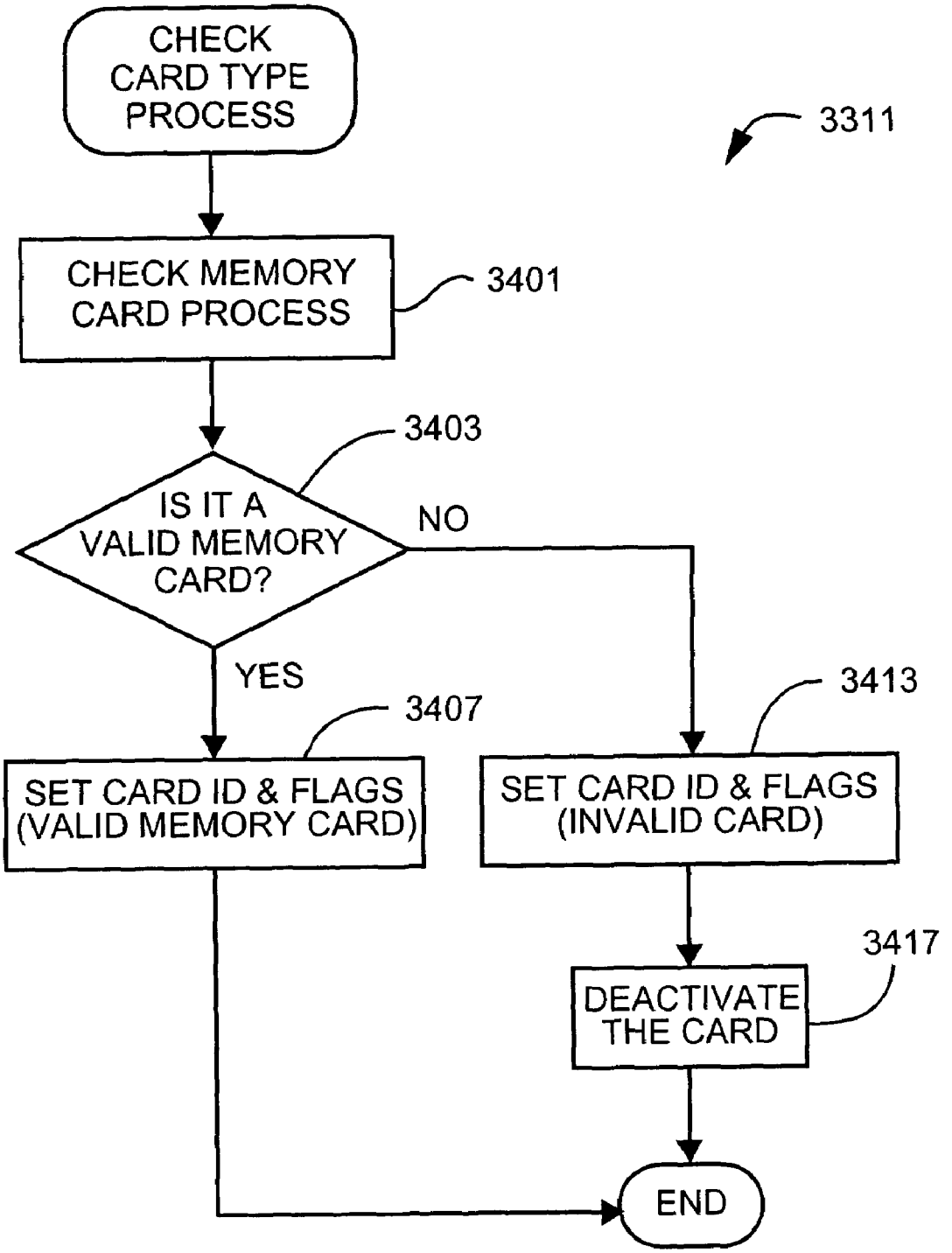
CHECK CARD TYPE PROCESS
3311
CHECK MEMORY CARD PROCESS
3401
3403
IS IT A VALID MEMORY CARD?
NO
YES
3407
3413
SET CARD ID & FLAGS (VALID MEMORY CARD)
SET CARD ID & FLAGS (INVALID CARD)
3417
DEACTIVATE THE CARD
END

Fig. 34

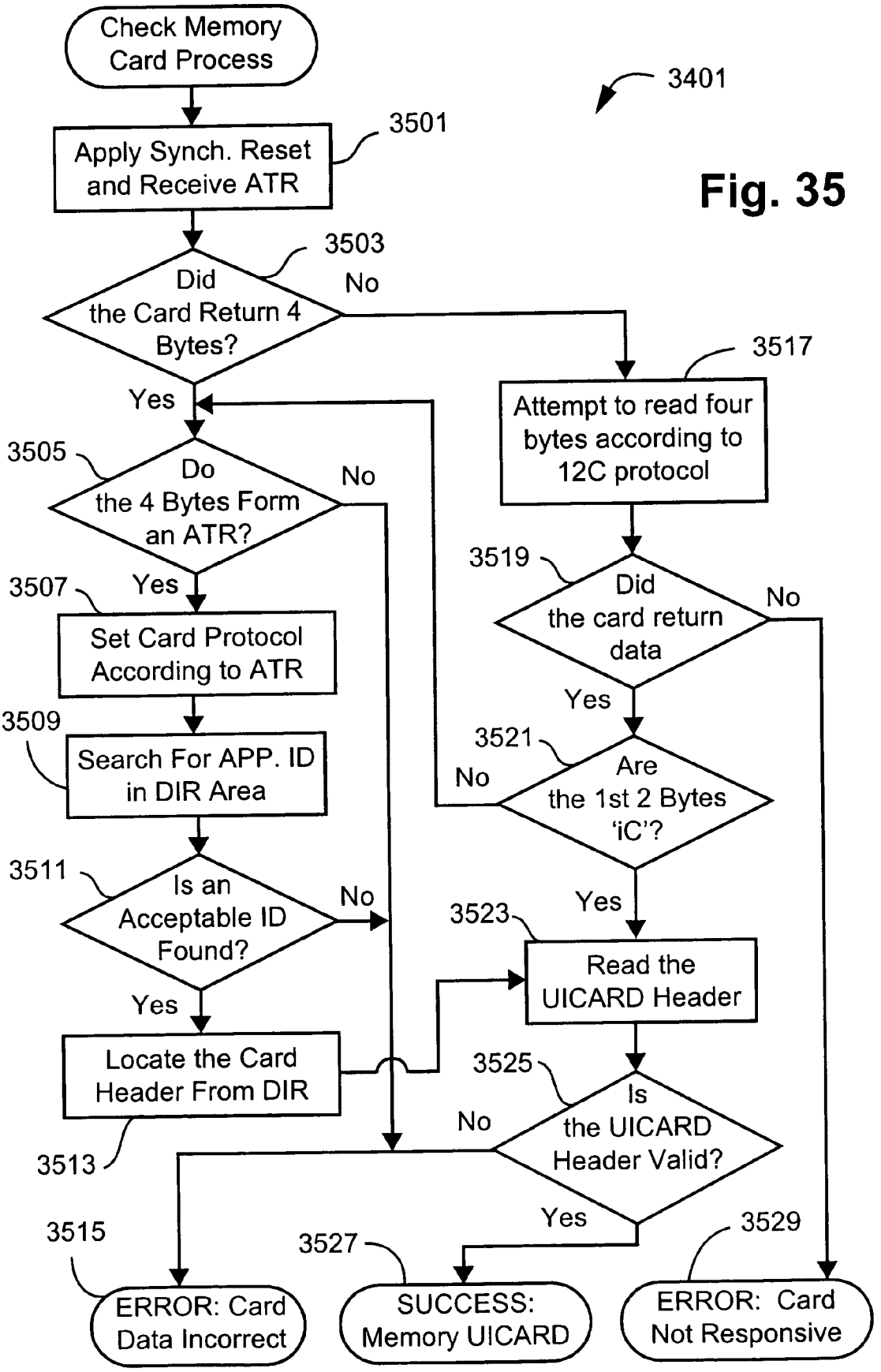
Check Memory Card Process
3401
3501
Apply Synch. Reset and Receive ATR
Fig. 35
3503
Did the Card Return 4 Bytes?
No
Yes
3517
Attempt to read four bytes according to 12C protocol
3505
Do the 4 Bytes Form an ATR?
No
Yes
3507
Set Card Protocol According to ATR
3519
Did the card return data
No
Yes
3509
Search For APP. ID in DIR Area
3521
Are the 1st 2 Bytes 'iC'?
No
Yes
3511
Is an Acceptable ID Found?
No
Yes
3523
Read the UICARD Header
Locate the Card Header From DIR
3525
Is the UICARD Header Valid?
No
Yes
3513
3515
3527
3529
ERROR: Card Data Incorrect
SUCCESS: Memory UICARD
ERROR: Card Not Responsive

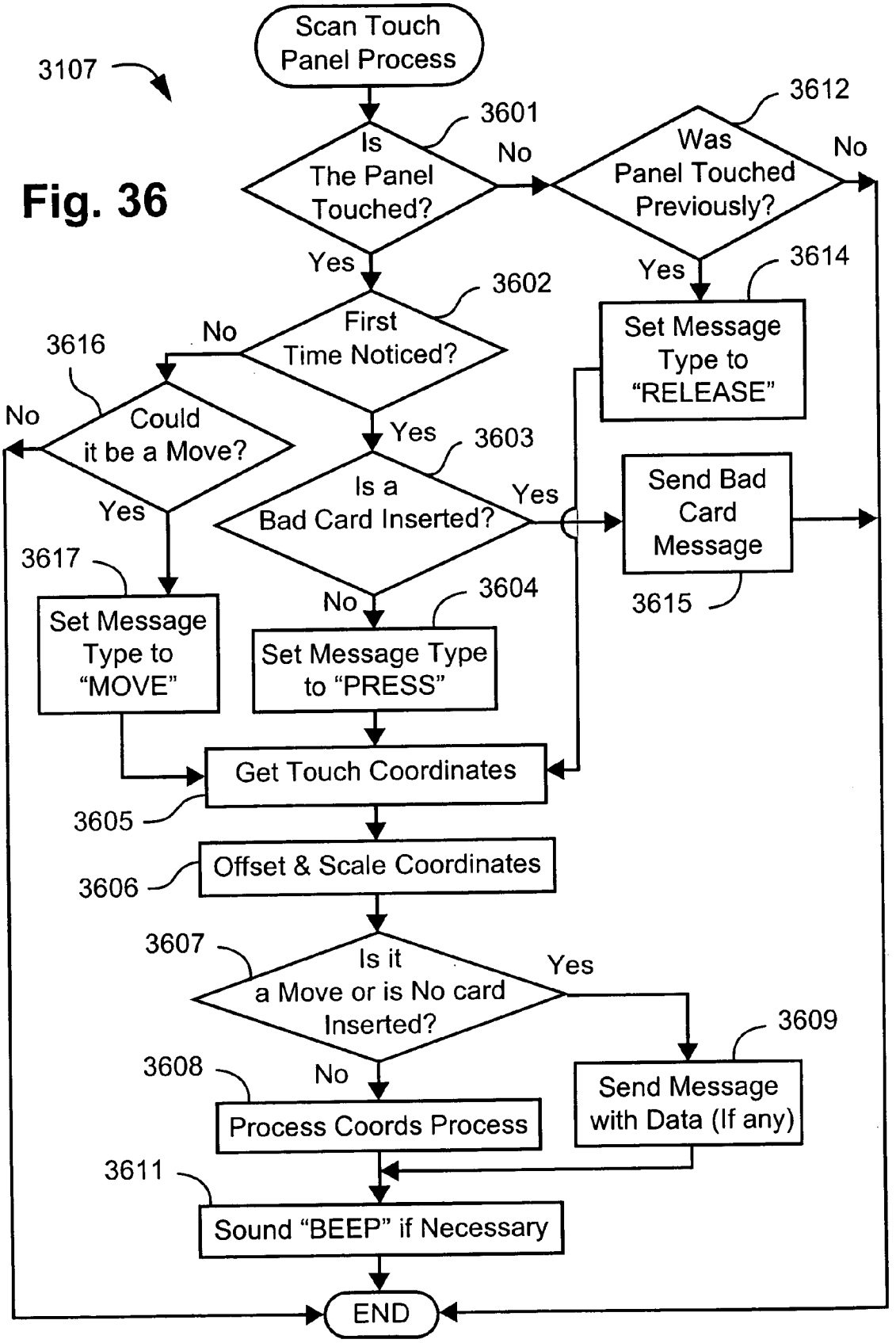
3107
Scan Touch Panel Process
3601
Is The Panel Touched?
No
3612
Was Panel Touched Previously?
No
Yes
3614
Set Message Type to "RELEASE"
Yes
3602
First Time Noticed?
No
3616
Could it be a Move?
No
Yes
3603
Is a Bad Card Inserted?
Yes
Send Bad Card Message
3615
3617
Set Message Type to "MOVE"
No
3604
Set Message Type to "PRESS"
Get Touch Coordinates
3605
Offset & Scale Coordinates
3606
3607
Is it a Move or is No card Inserted?
Yes
3609
Send Message with Data (If any)
3608
No
Process Coords Process
3611
Sound "BEEP" if Necessary
END

Fig. 36

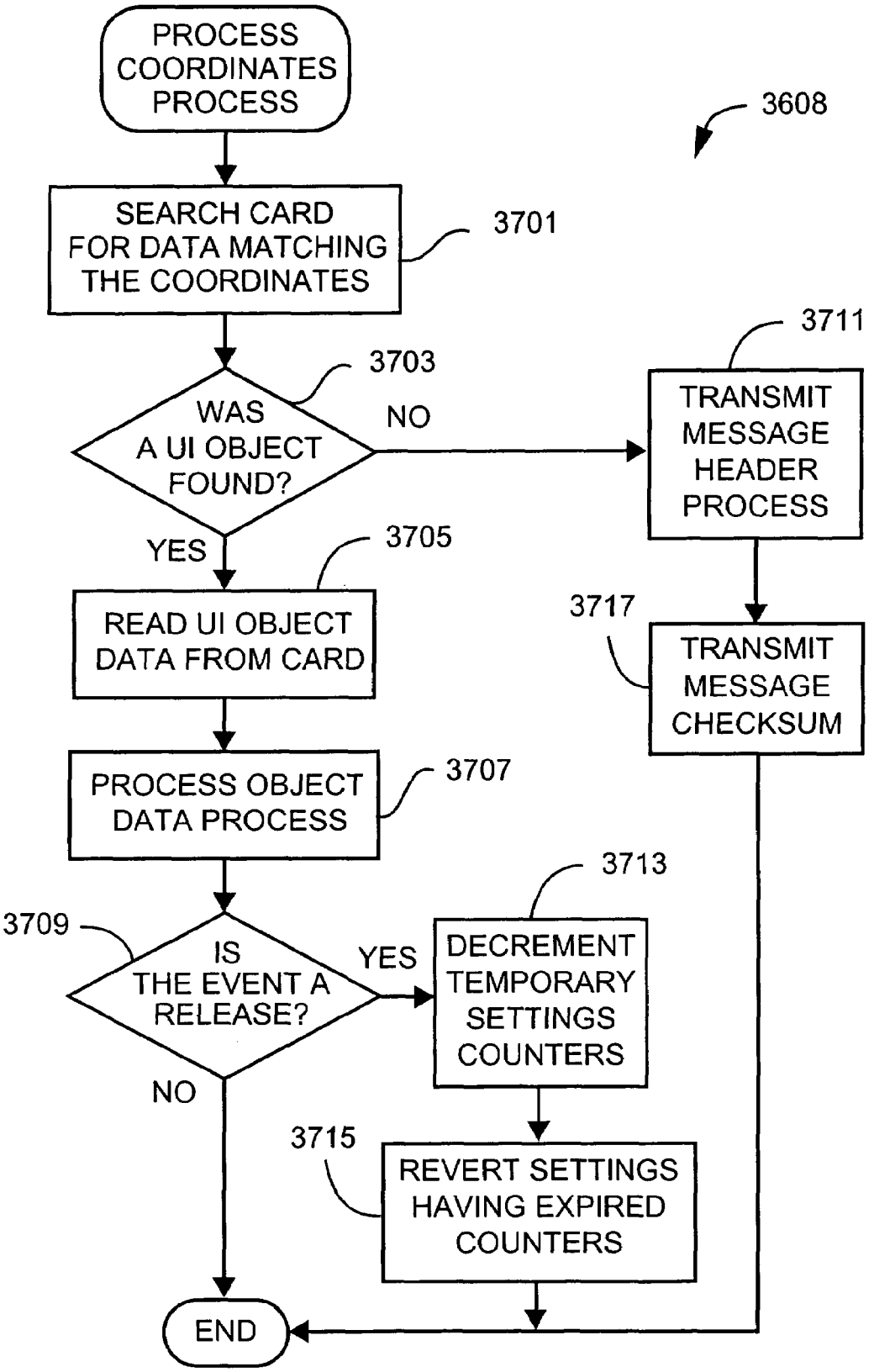
PROCESS COORDINATES PROCESS
3608
SEARCH CARD FOR DATA MATCHING THE COORDINATES
3701
3711
3703
WAS A UI OBJECT FOUND?
NO
TRANSMIT MESSAGE HEADER PROCESS
YES
3705
READ UI OBJECT DATA FROM CARD
3717
TRANSMIT MESSAGE CHECKSUM
PROCESS OBJECT DATA PROCESS
3707
3713
3709
IS THE EVENT A RELEASE?
YES
DECREMENT TEMPORARY SETTINGS COUNTERS
NO
3715
REVERT SETTINGS HAVING EXPIRED COUNTERS
END

Fig. 37

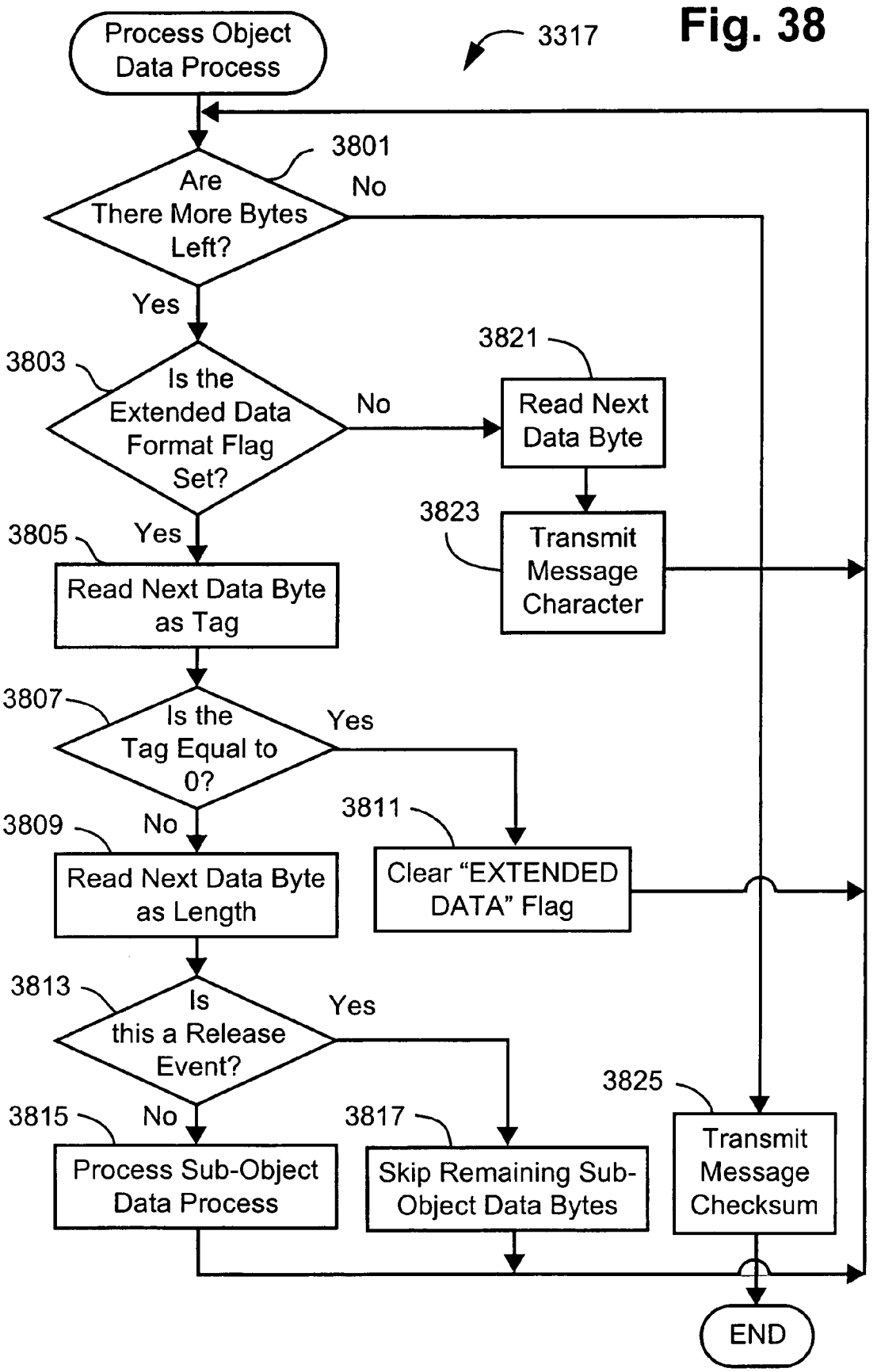
Fig. 38
3317
Process Object Data Process
3801
Are There More Bytes Left?
No
Yes
3803
Is the Extended Data Format Flag Set?
No
3821
Read Next Data Byte
3823
Transmit Message Character
3805
Yes
Read Next Data Byte as Tag
3807
Is the Tag Equal to 0?
Yes
3811
Clear "EXTENDED DATA" Flag
3809
No
Read Next Data Byte as Length
3813
Is this a Release Event?
Yes
3815
No
Process Sub-Object Data Process
3817
Skip Remaining Sub-Object Data Bytes
3825
Transmit Message Checksum
END

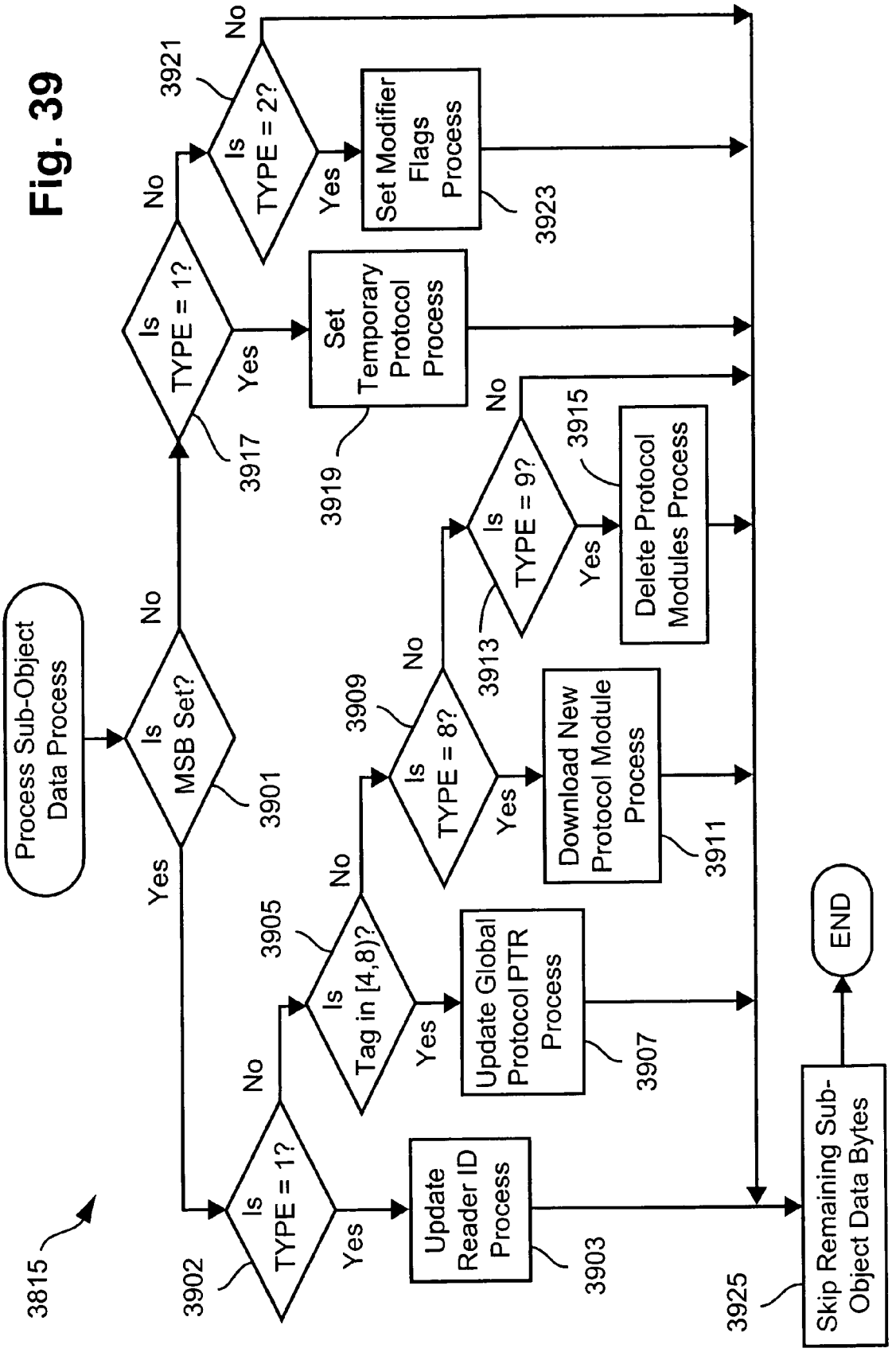
Process Sub-Object Data Process
Is MSB Set?
3901
Yes
No
Is TYPE = 1?
3902
Yes
No
Update Reader ID Process
3903
Is Tag in [4,8)?
3905
Yes
No
Update Global Protocol PTR Process
3907
Is TYPE = 8?
3909
Yes
No
Download New Protocol Module Process
3911
Is TYPE = 9?
3913
Yes
No
Delete Protocol Modules Process
3915
Is TYPE = 1?
3917
Yes
No
Set Temporary Protocol Process
3919
Is TYPE = 2?
3921
Yes
No
Set Modifier Flags Process
3923
Skip Remaining Sub-Object Data Bytes
3925
END
3815

Fig. 39

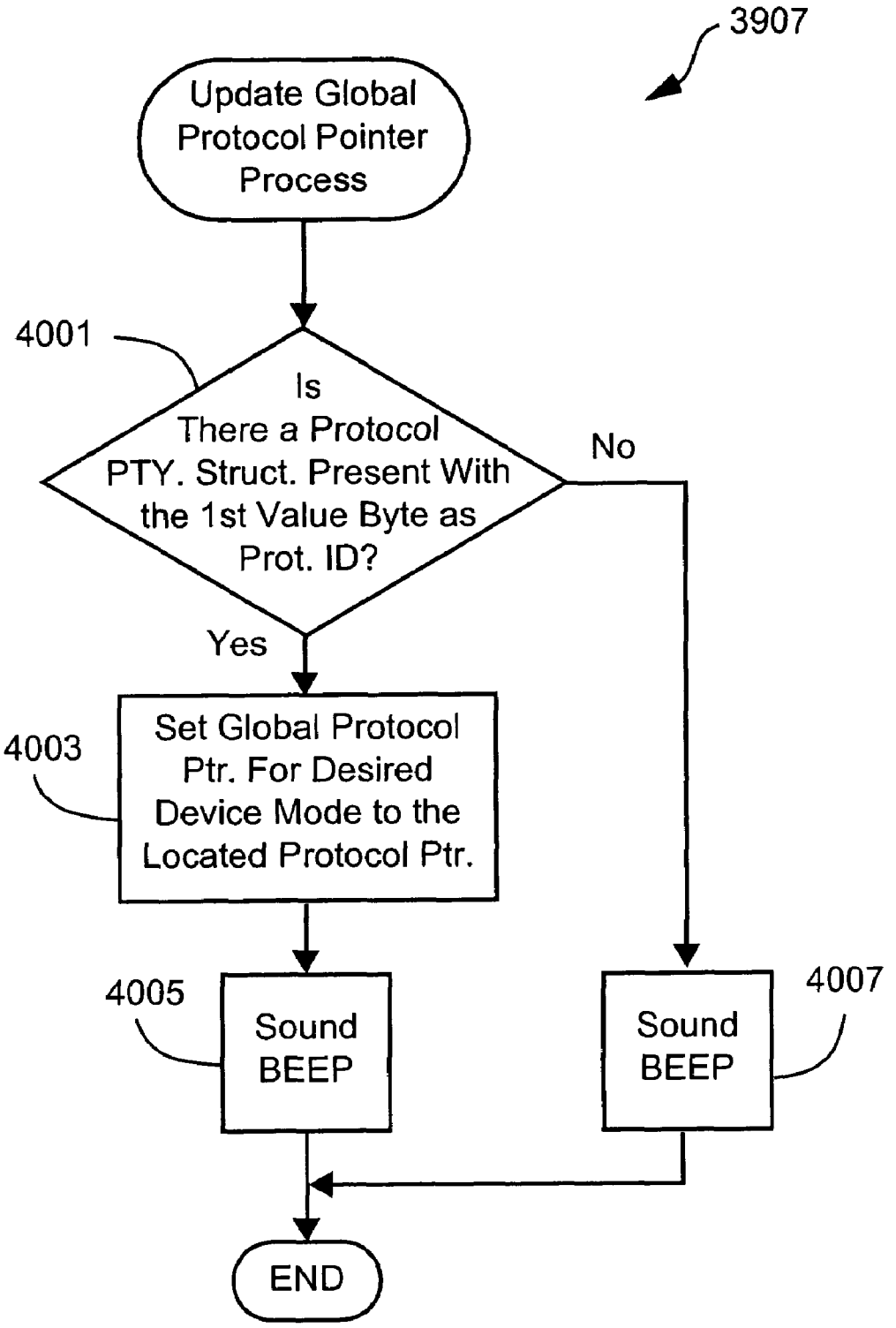
3907
Update Global Protocol Pointer Process
4001
Is There a Protocol PTY. Struct. Present With the 1st Value Byte as Prot. ID?
No
Yes
4003
Set Global Protocol Ptr. For Desired Device Mode to the Located Protocol Ptr.
4005
Sound BEEP
4007
Sound BEEP
END

Fig. 40

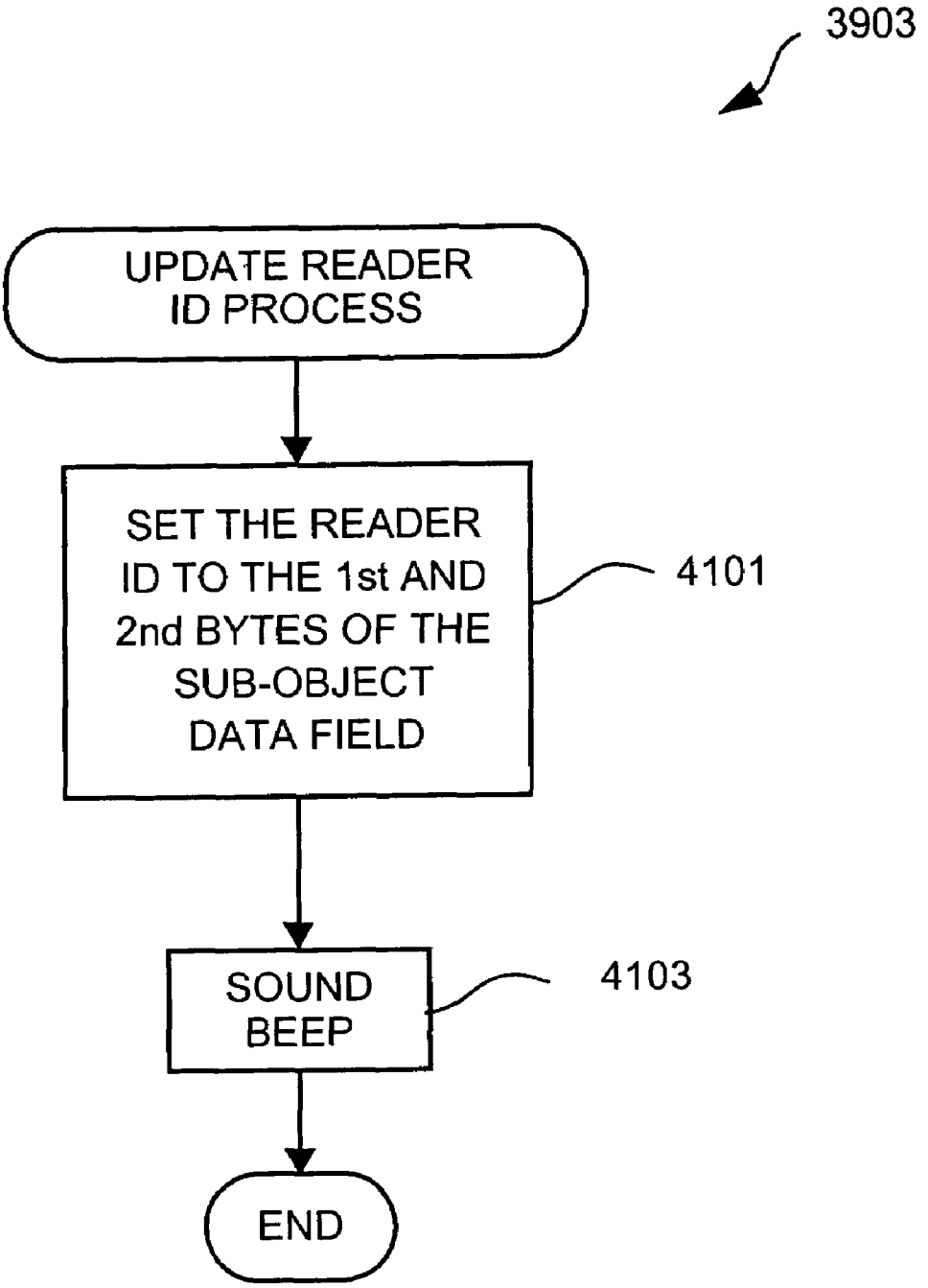
3903
UPDATE READER ID PROCESS
SET THE READER ID TO THE 1st AND 2nd BYTES OF THE SUB-OBJECT DATA FIELD
4101
SOUND BEEP
4103
END

Fig. 41

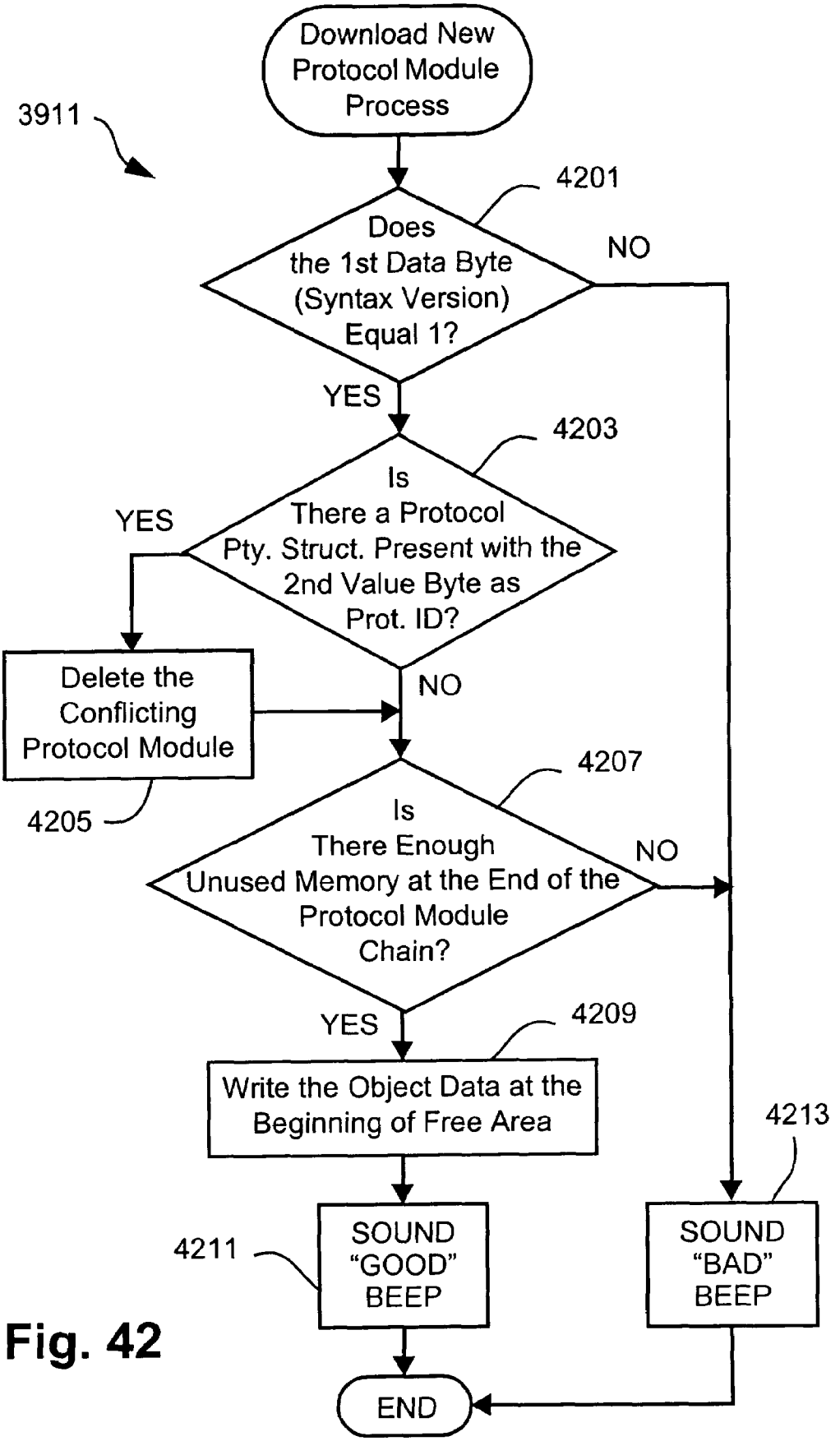
Download New Protocol Module Process
3911
4201
Does the 1st Data Byte (Syntax Version) Equal 1?
NO
YES
4203
Is There a Protocol Pty. Struct. Present with the 2nd Value Byte as Prot. ID?
YES
Delete the Conflicting Protocol Module
4205
NO
4207
Is There Enough Unused Memory at the End of the Protocol Module Chain?
NO
YES
4209
Write the Object Data at the Beginning of Free Area
4213
4211
SOUND "GOOD" BEEP
SOUND "BAD" BEEP
END

Fig. 42

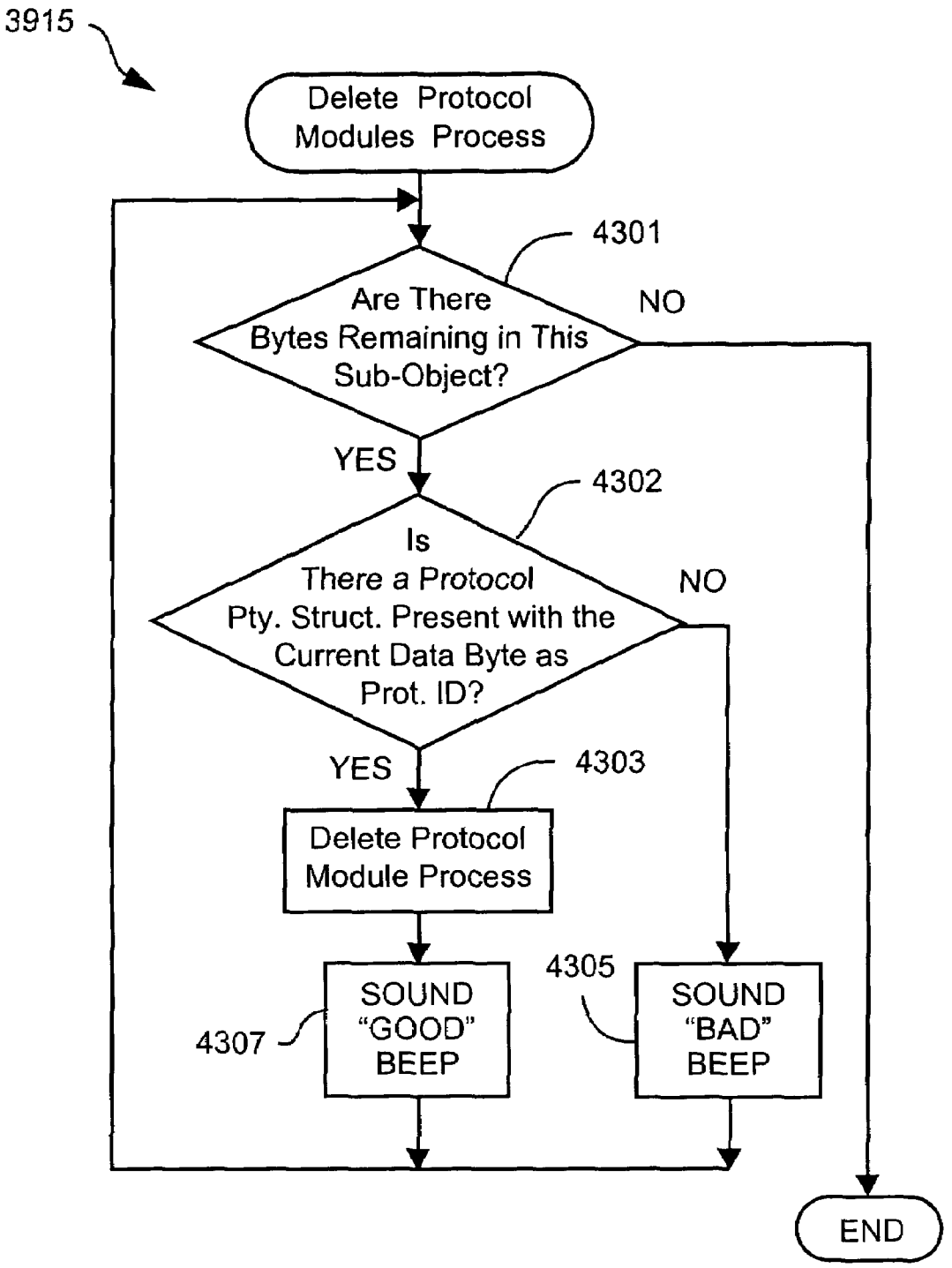
3915
Delete Protocol Modules Process
4301
Are There Bytes Remaining in This Sub-Object?
NO
YES
4302
Is There a Protocol Pty. Struct. Present with the Current Data Byte as Prot. ID?
NO
YES
4303
Delete Protocol Module Process
4305
SOUND "GOOD" BEEP
4307
SOUND "BAD" BEEP
END

Fig. 43

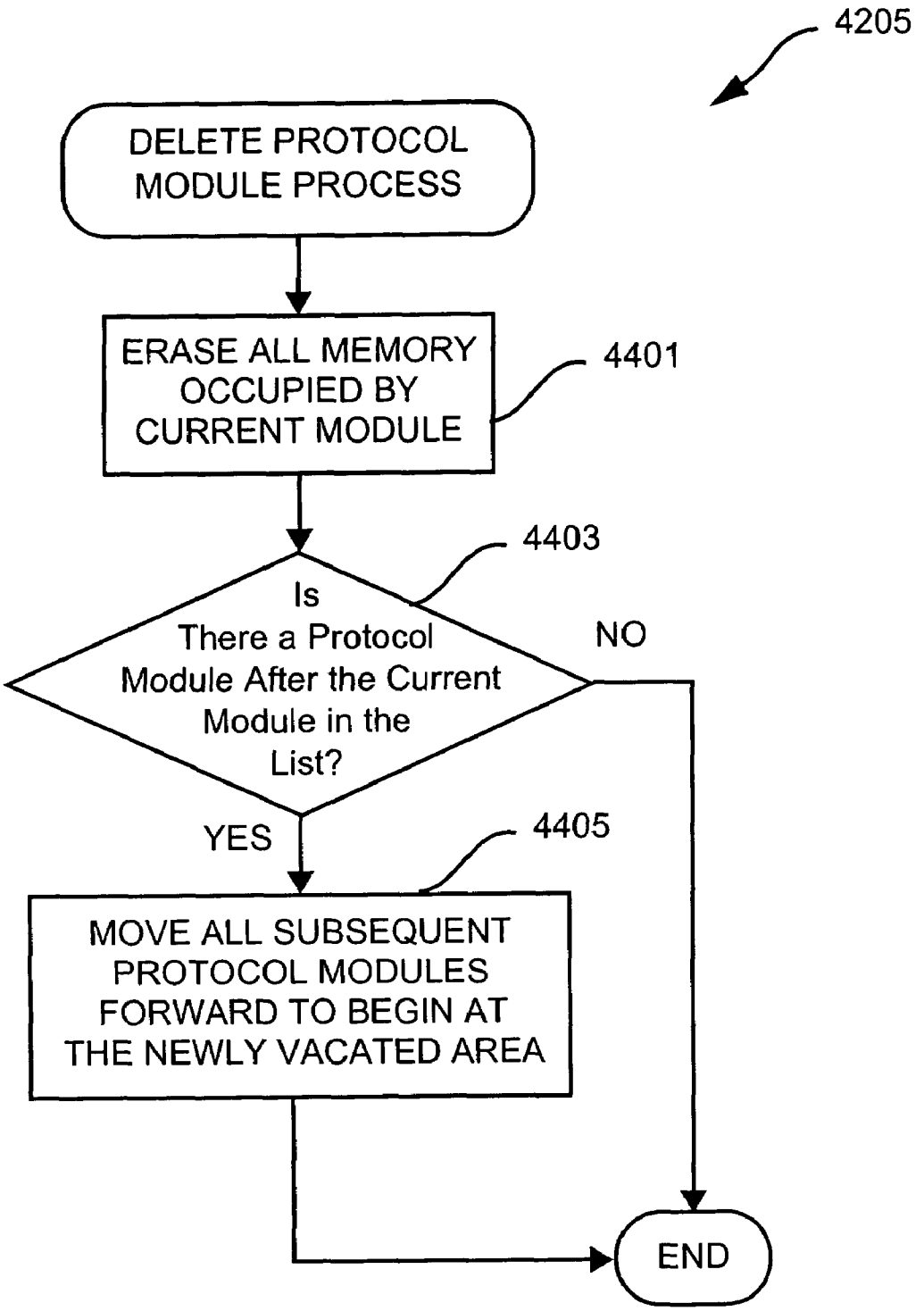
4205
DELETE PROTOCOL MODULE PROCESS
ERASE ALL MEMORY OCCUPIED BY CURRENT MODULE
4401
4403
Is There a Protocol Module After the Current Module in the List?
NO
YES
4405
MOVE ALL SUBSEQUENT PROTOCOL MODULES FORWARD TO BEGIN AT THE NEWLY VACATED AREA
END

Fig. 44

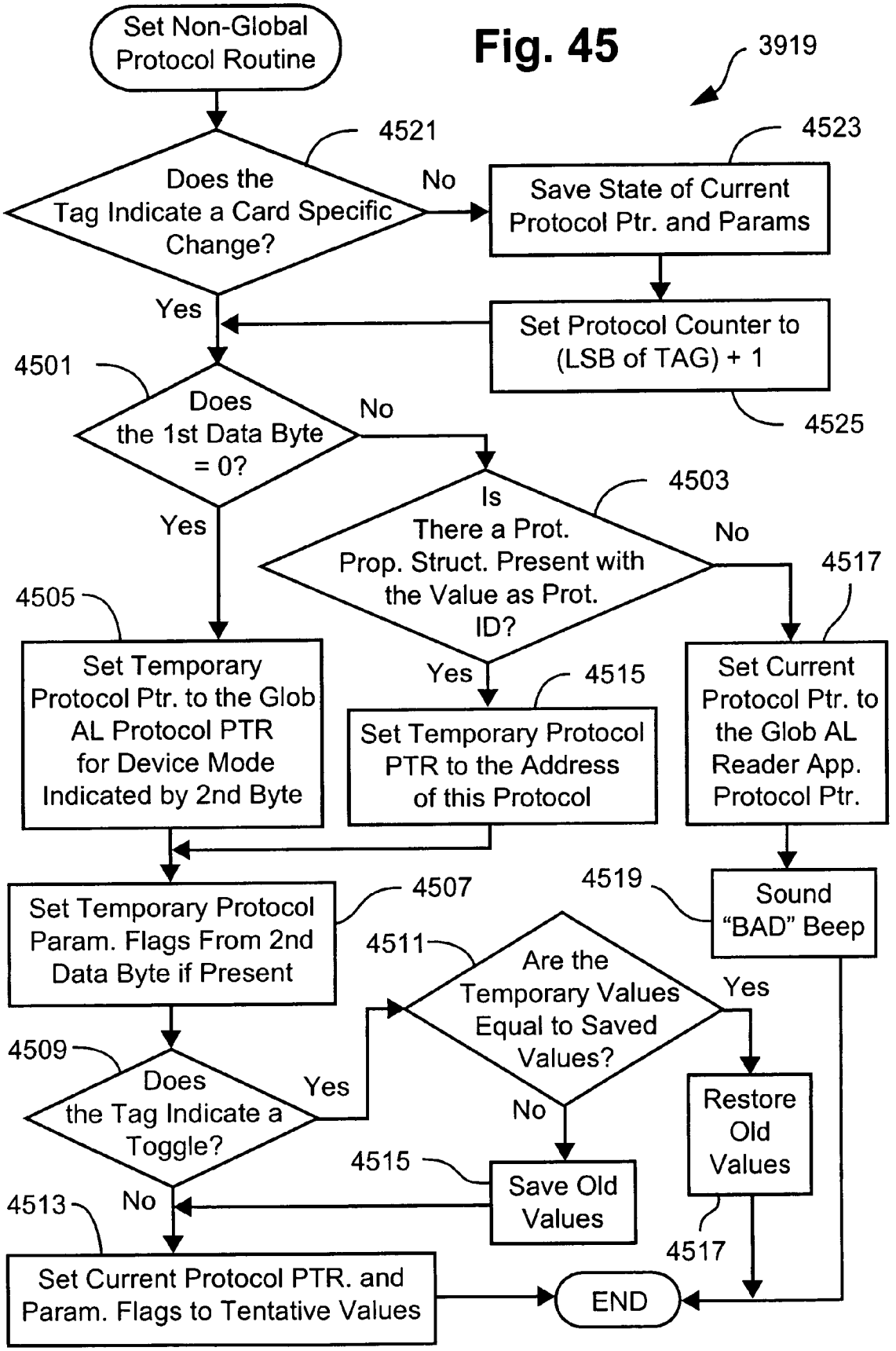
Fig. 45
3919
Set Non-Global Protocol Routine
4521
Does the Tag Indicate a Card Specific Change?
No
4523
Save State of Current Protocol Ptr. and Params
Yes
Set Protocol Counter to (LSB of TAG) + 1
4525
4501
Does the 1st Data Byte = 0?
No
4503
Is There a Prot. Prop. Struct. Present with the Value as Prot. ID?
Yes
No
4517
4505
Set Temporary Protocol Ptr. to the Glob AL Protocol PTR for Device Mode Indicated by 2nd Byte
Yes
4515
Set Temporary Protocol PTR to the Address of this Protocol
Set Current Protocol Ptr. to the Glob AL Reader App. Protocol Ptr.
4507
Set Temporary Protocol Param. Flags From 2nd Data Byte if Present
4519
Sound "BAD" Beep
4511
Are the Temporary Values Equal to Saved Values?
Yes
4509
Does the Tag Indicate a Toggle?
Yes
No
Restore Old Values
4515
Save Old Values
4513
No
4517
Set Current Protocol PTR. and Param. Flags to Tentative Values
END

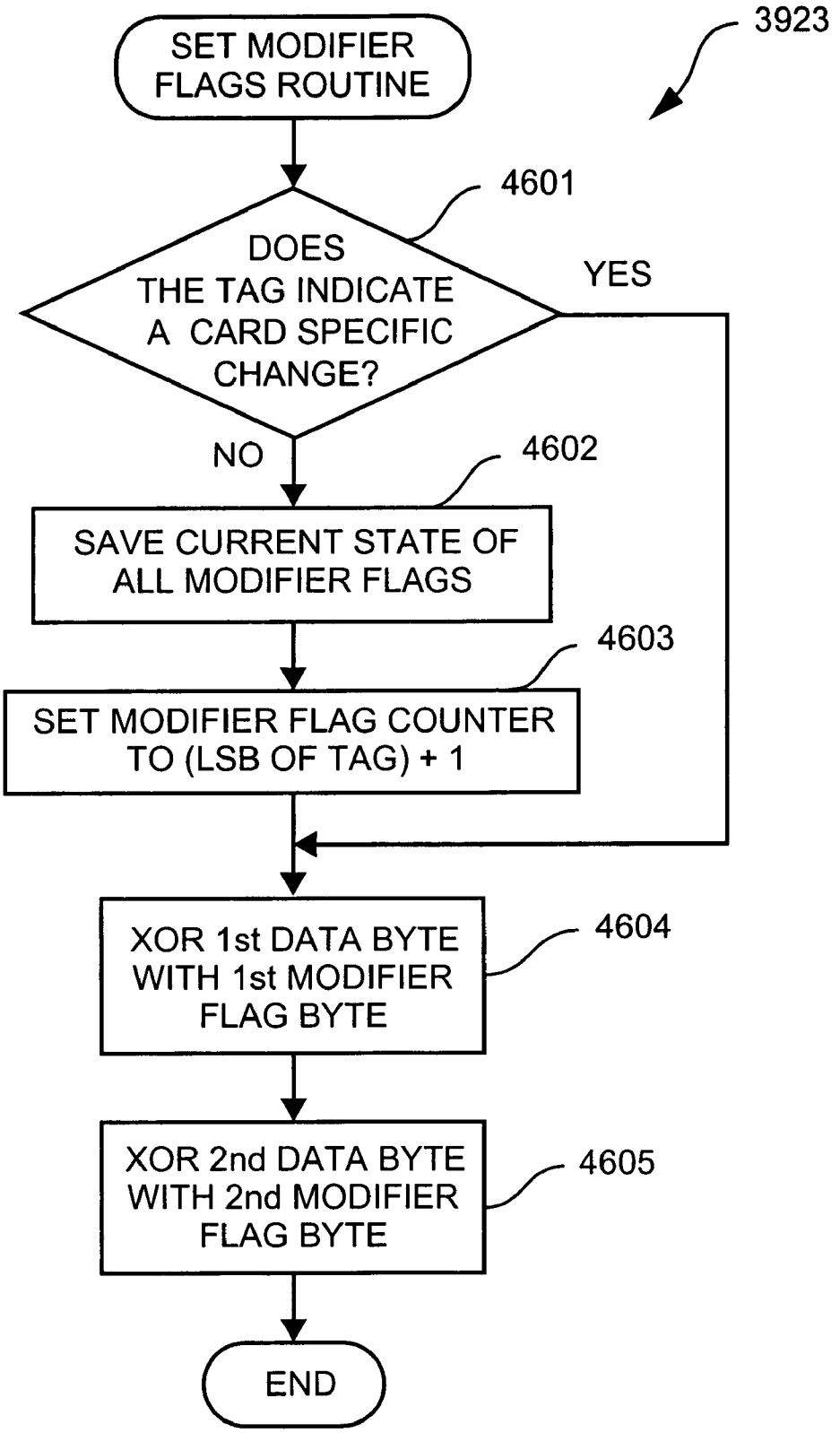
3923
SET MODIFIER FLAGS ROUTINE
4601
DOES THE TAG INDICATE A CARD SPECIFIC CHANGE?
YES
NO
4602
SAVE CURRENT STATE OF ALL MODIFIER FLAGS
4603
SET MODIFIER FLAG COUNTER TO (LSB OF TAG) + 1
XOR 1st DATA BYTE WITH 1st MODIFIER FLAG BYTE
4604
XOR 2nd DATA BYTE WITH 2nd MODIFIER FLAG BYTE
4605
END

Fig. 46

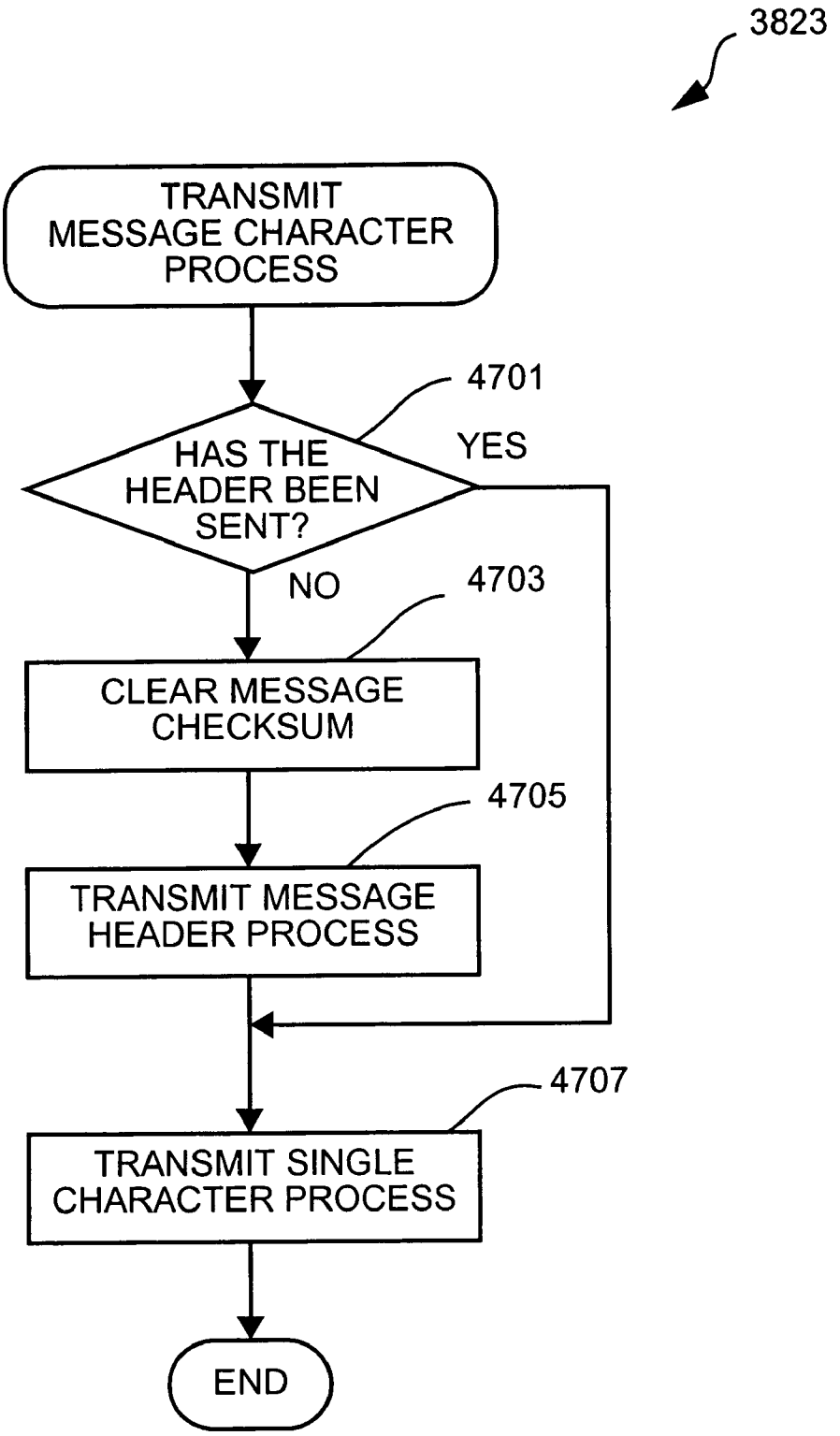
3823
TRANSMIT MESSAGE CHARACTER PROCESS
4701
HAS THE HEADER BEEN SENT?
YES
NO
4703
CLEAR MESSAGE CHECKSUM
4705
TRANSMIT MESSAGE HEADER PROCESS
4707
TRANSMIT SINGLE CHARACTER PROCESS
END

Fig. 47

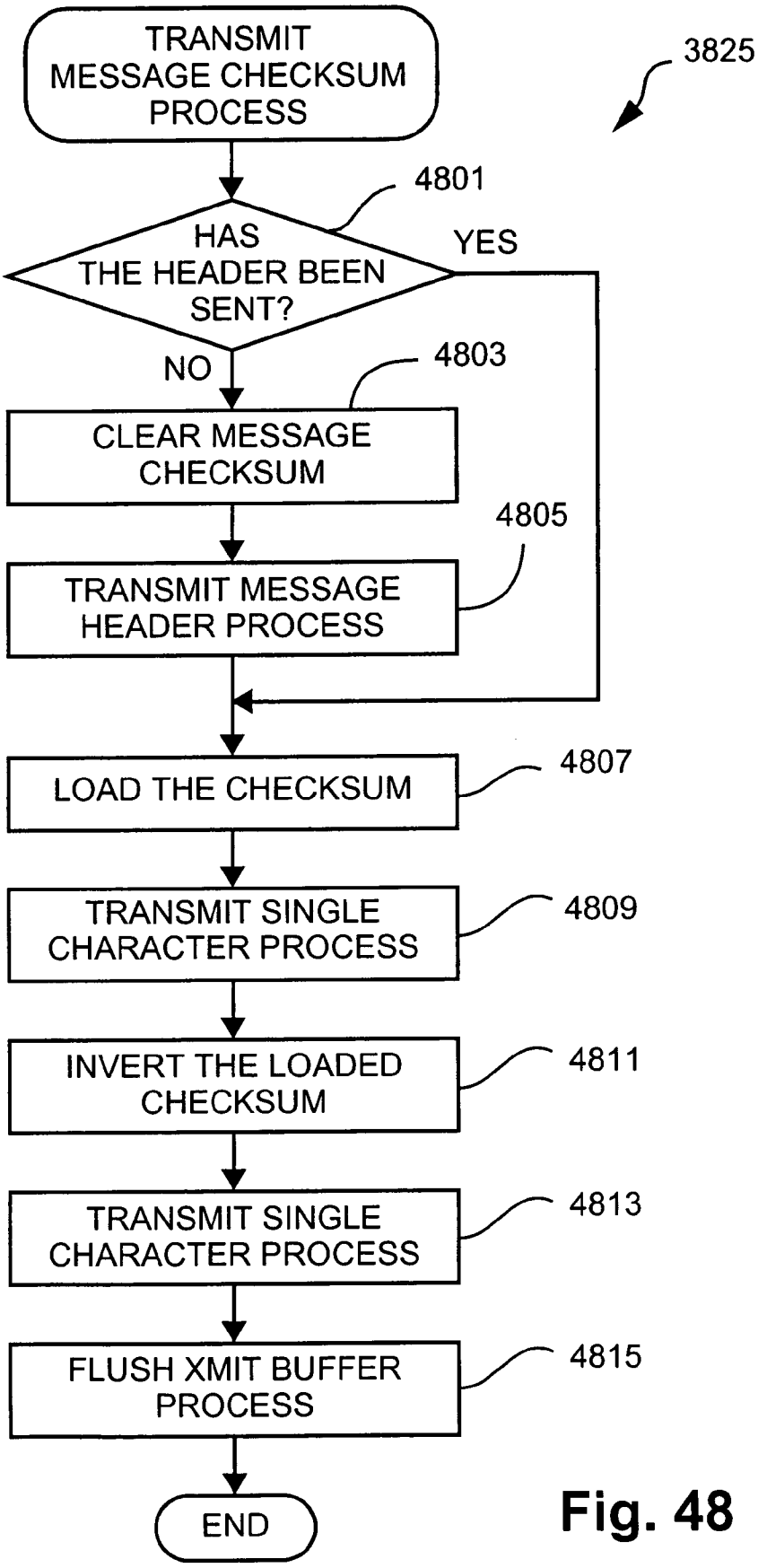
TRANSMIT MESSAGE CHECKSUM PROCESS
3825
4801
HAS THE HEADER BEEN SENT?
YES
NO
4803
CLEAR MESSAGE CHECKSUM
4805
TRANSMIT MESSAGE HEADER PROCESS
LOAD THE CHECKSUM
4807
TRANSMIT SINGLE CHARACTER PROCESS
4809
INVERT THE LOADED CHECKSUM
4811
TRANSMIT SINGLE CHARACTER PROCESS
4813
FLUSH XMIT BUFFER PROCESS
4815
END

Fig. 48

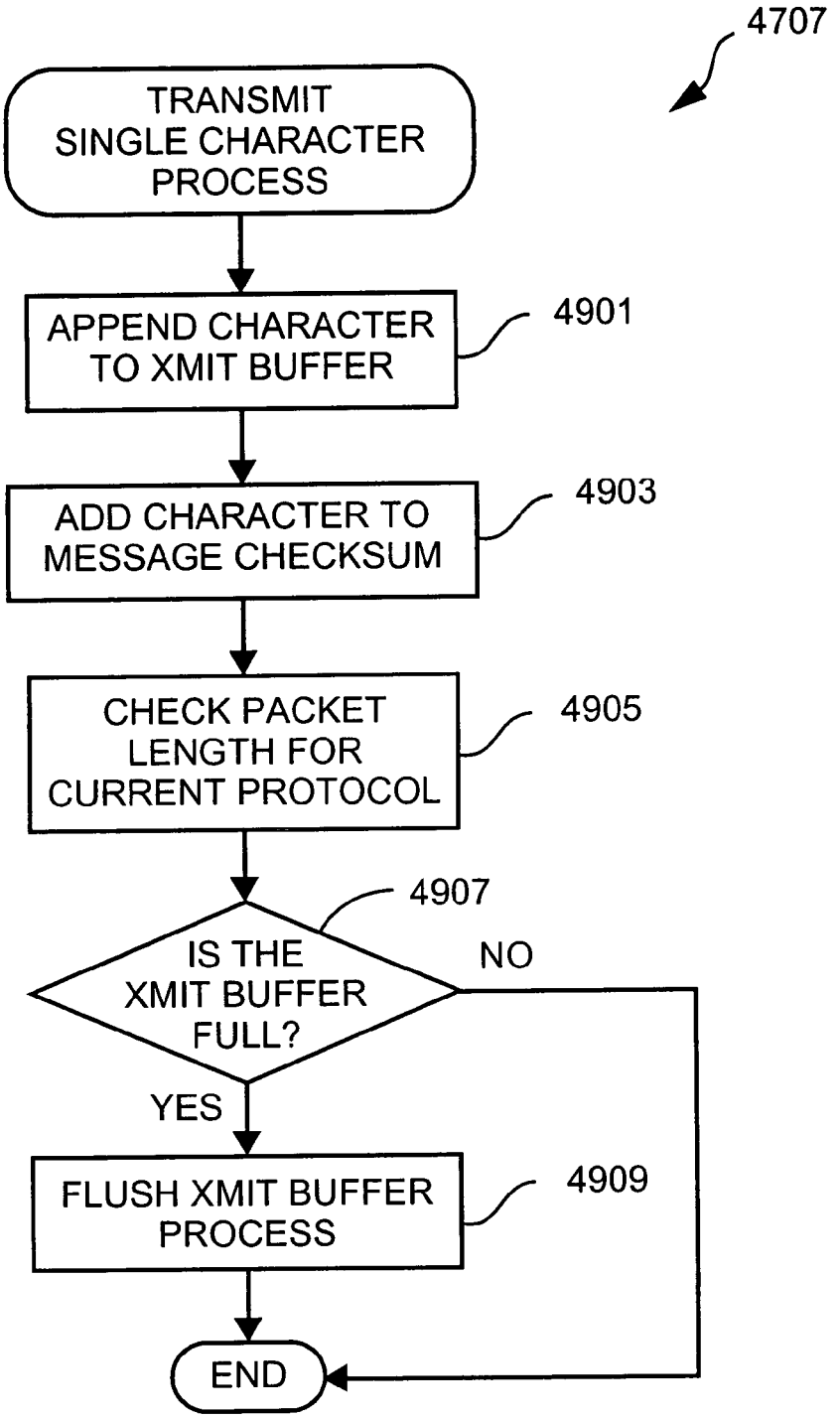
4707
TRANSMIT SINGLE CHARACTER PROCESS
APPEND CHARACTER TO XMIT BUFFER
4901
ADD CHARACTER TO MESSAGE CHECKSUM
4903
CHECK PACKET LENGTH FOR CURRENT PROTOCOL
4905
4907
IS THE XMIT BUFFER FULL?
NO
YES
FLUSH XMIT BUFFER PROCESS
4909
END

Fig. 49

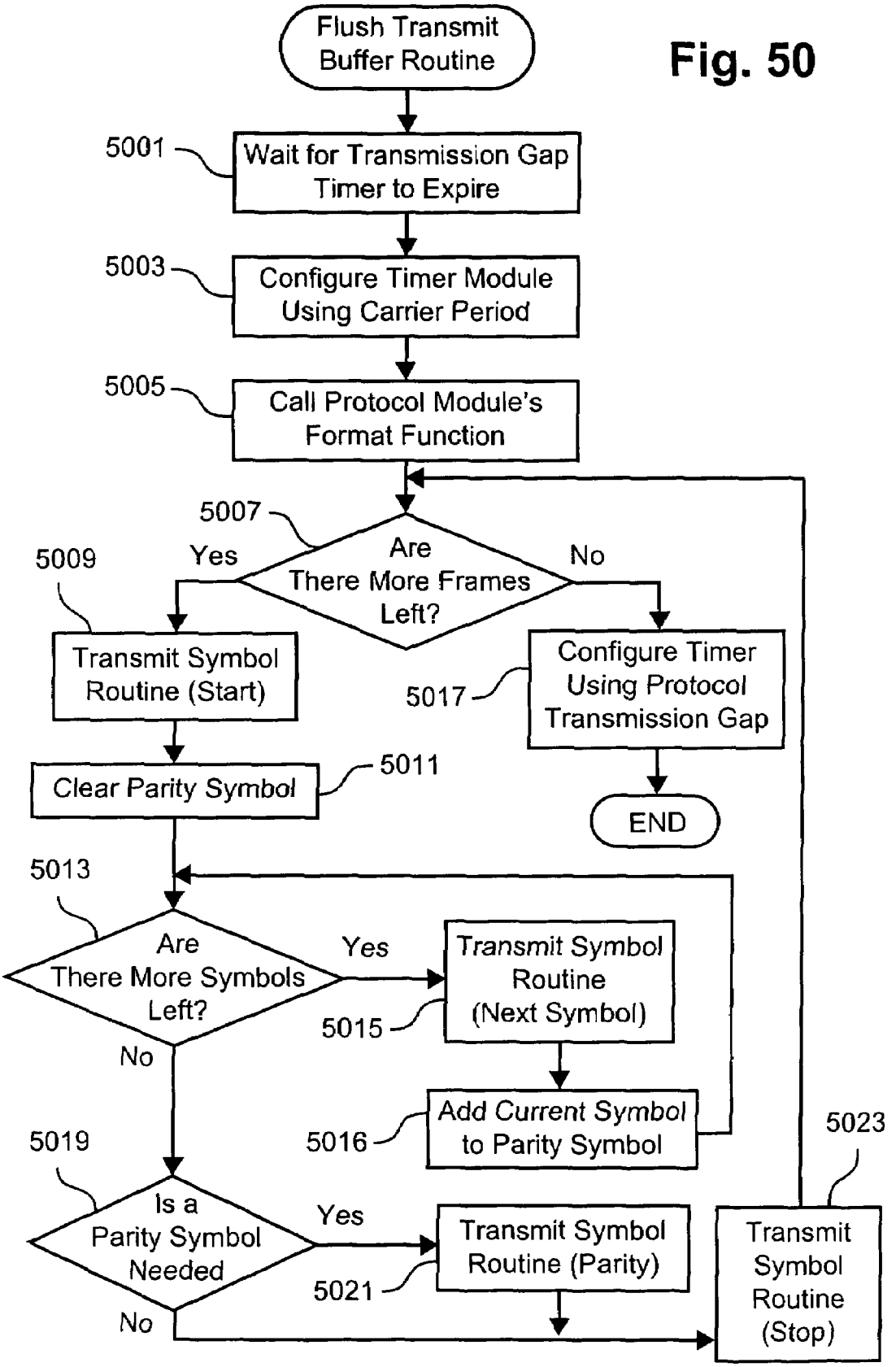
Flush Transmit Buffer Routine
Fig. 50
5001
Wait for Transmission Gap Timer to Expire
5003
Configure Timer Module Using Carrier Period
5005
Call Protocol Module's Format Function
5007
Are There More Frames Left?
Yes
No
5009
Transmit Symbol Routine (Start)
5017
Configure Timer Using Protocol Transmission Gap
END
Clear Parity Symbol
5011
5013
Are There More Symbols Left?
Yes
Transmit Symbol Routine (Next Symbol)
5015
No
Add Current Symbol to Parity Symbol
5016
5019
Is a Parity Symbol Needed
Yes
Transmit Symbol Routine (Parity)
5021
No
5023
Transmit Symbol Routine (Stop)

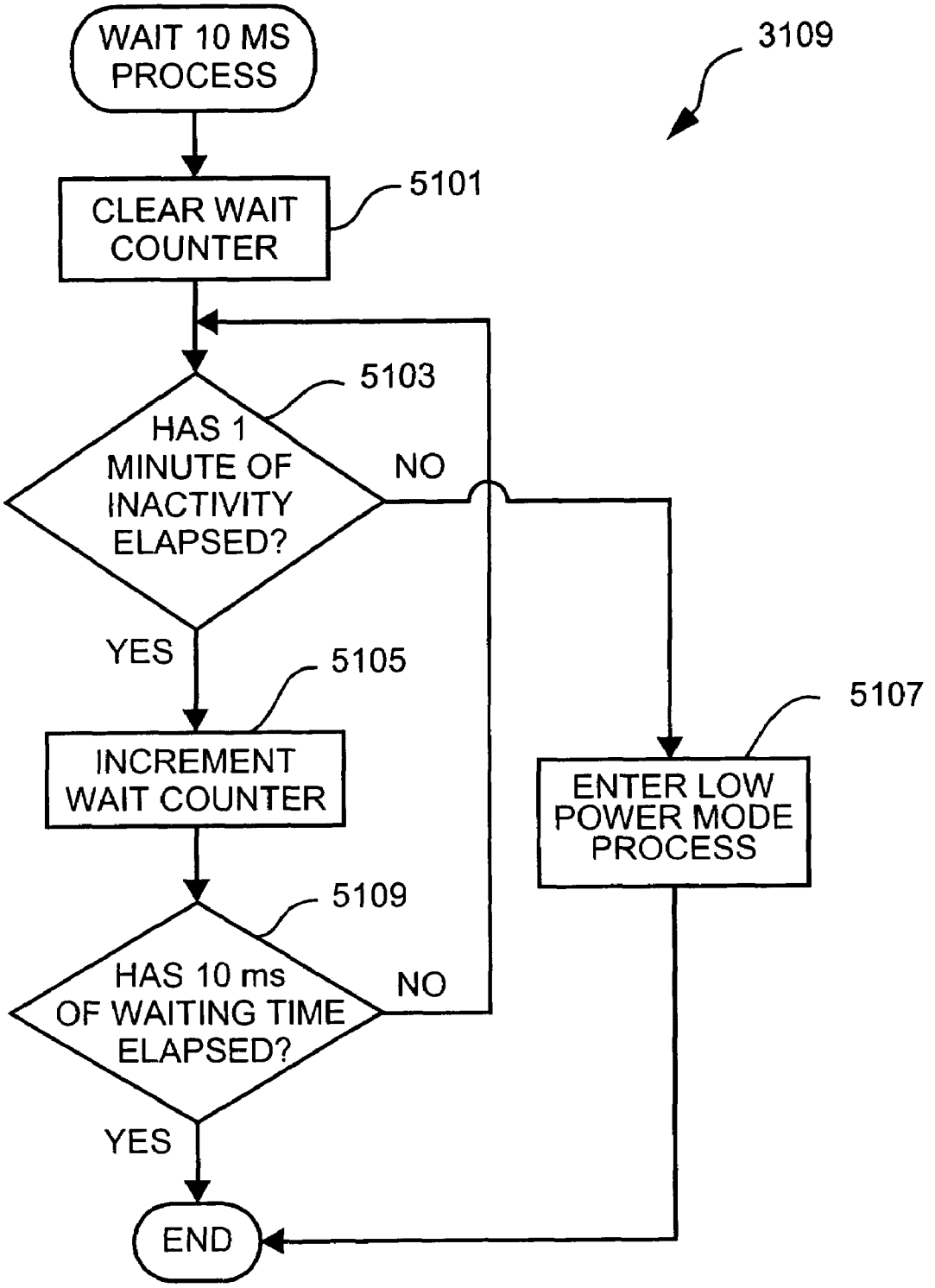
WAIT 10 MS PROCESS
3109
CLEAR WAIT COUNTER
5101
5103
HAS 1 MINUTE OF INACTIVITY ELAPSED?
NO
YES
5105
INCREMENT WAIT COUNTER
5107
ENTER LOW POWER MODE PROCESS
5109
HAS 10 ms OF WAITING TIME ELAPSED?
NO
YES
END

Fig. 51

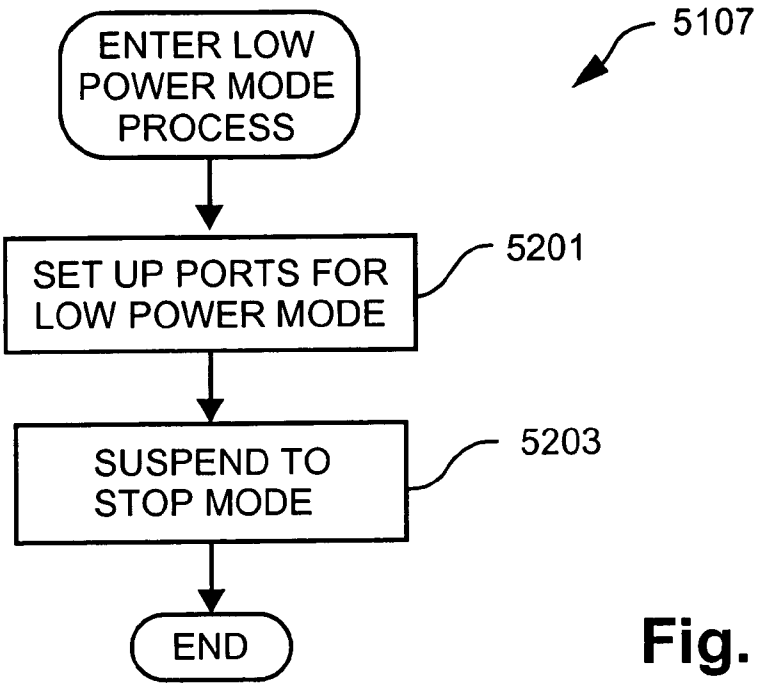
5107
ENTER LOW POWER MODE PROCESS
SET UP PORTS FOR LOW POWER MODE
5201
SUSPEND TO STOP MODE
5203
END

Fig. 52

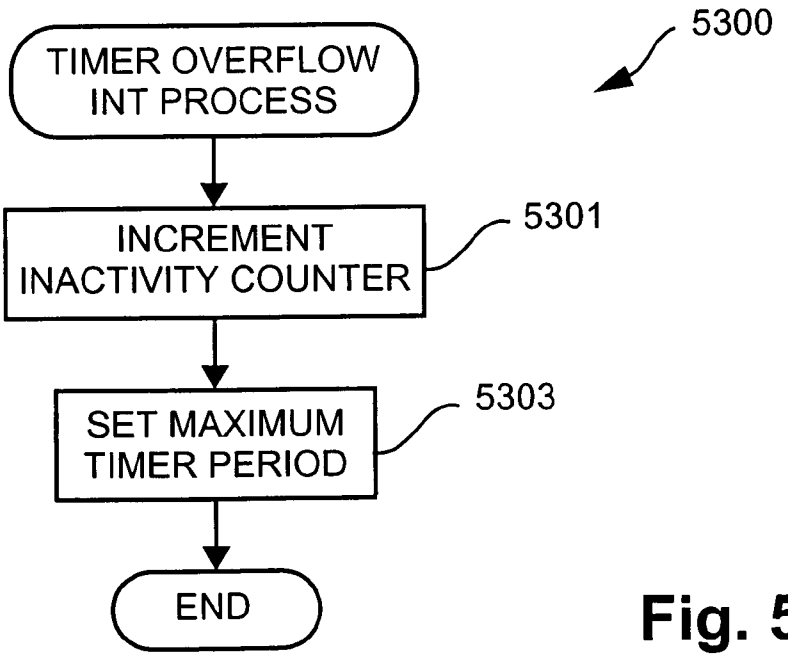
5300
TIMER OVERFLOW INT PROCESS
INCREMENT INACTIVITY COUNTER
5301
SET MAXIMUM TIMER PERIOD
5303
END

Fig. 53

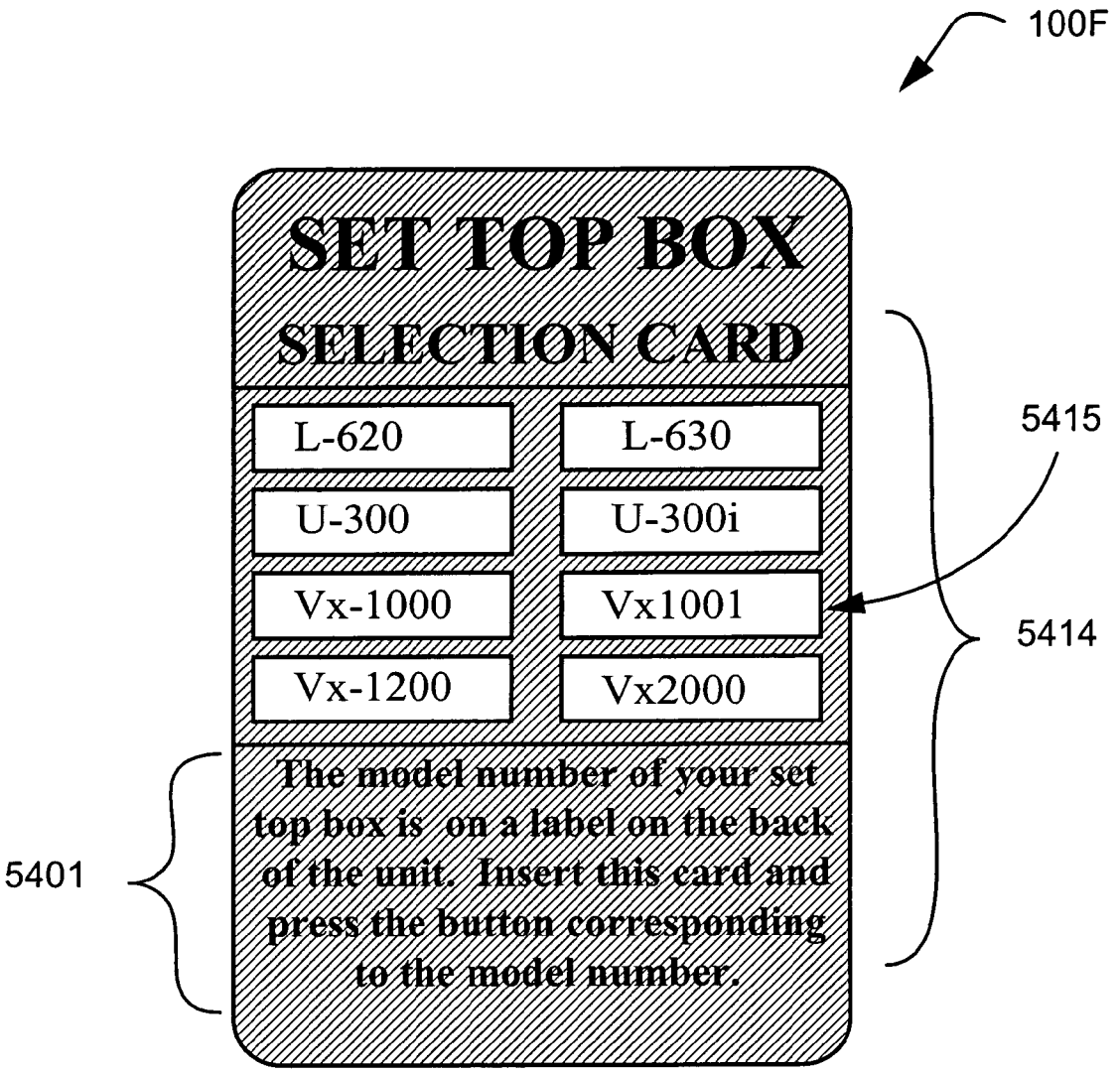
100F
SET TOP BOX
SELECTION CARD
L-620
L-630
U-300
U-300i
Vx-1000
Vx1001
Vx-1200
Vx2000
The model number of your set top box is on a label on the back of the unit. Insert this card and press the button corresponding to the model number.
5415
5414
5401

Fig. 54

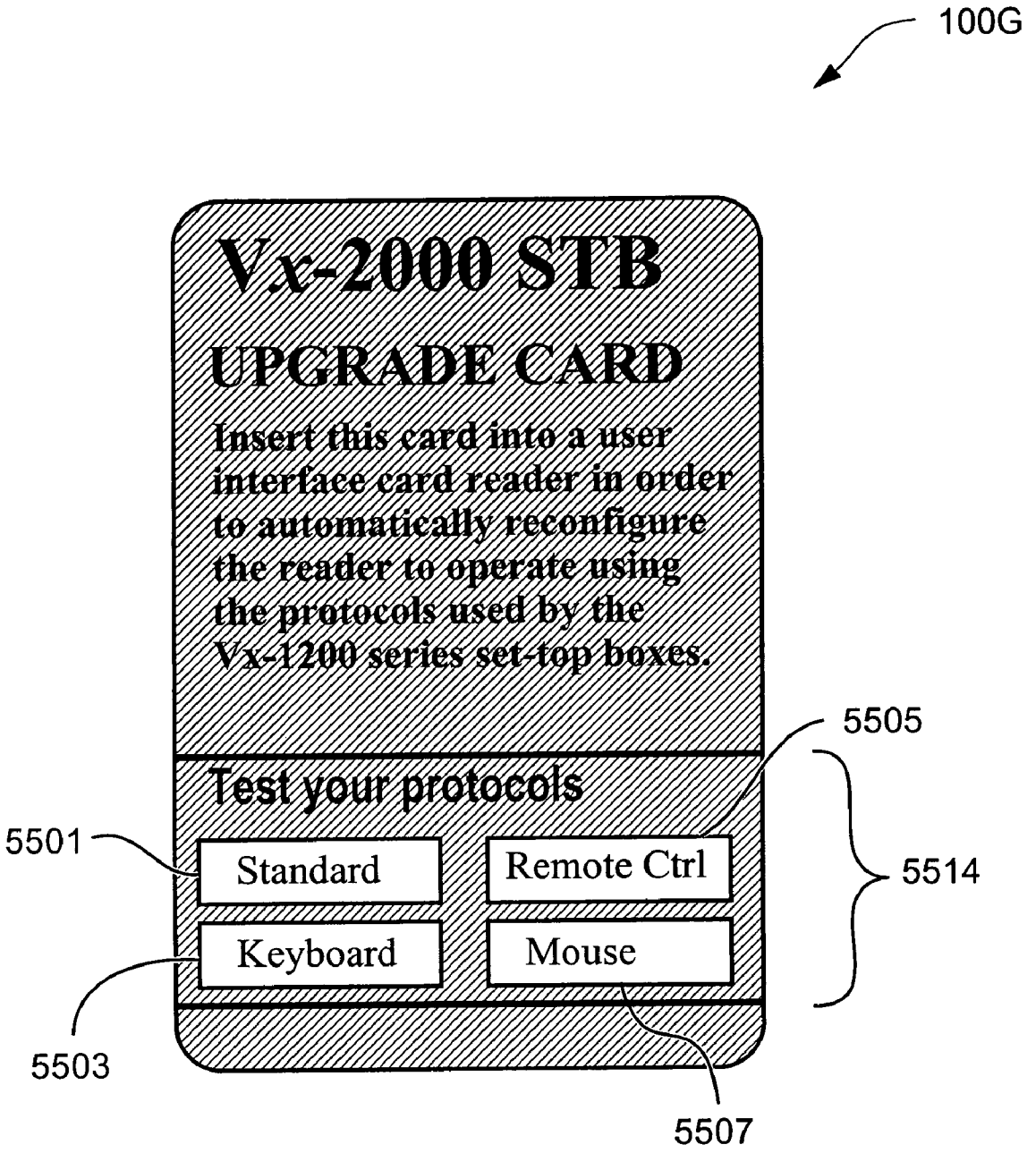
100G
Vx-2000 STB
UPGRADE CARD
Insert this card into a user interface card reader in order to automatically reconfigure the reader to operate using the protocols used by the Vx-1200 series set-top boxes.
Test your protocols
Standard
Remote Ctrl
Keyboard
Mouse
5501
5503
5505
5507
5514

Fig. 55

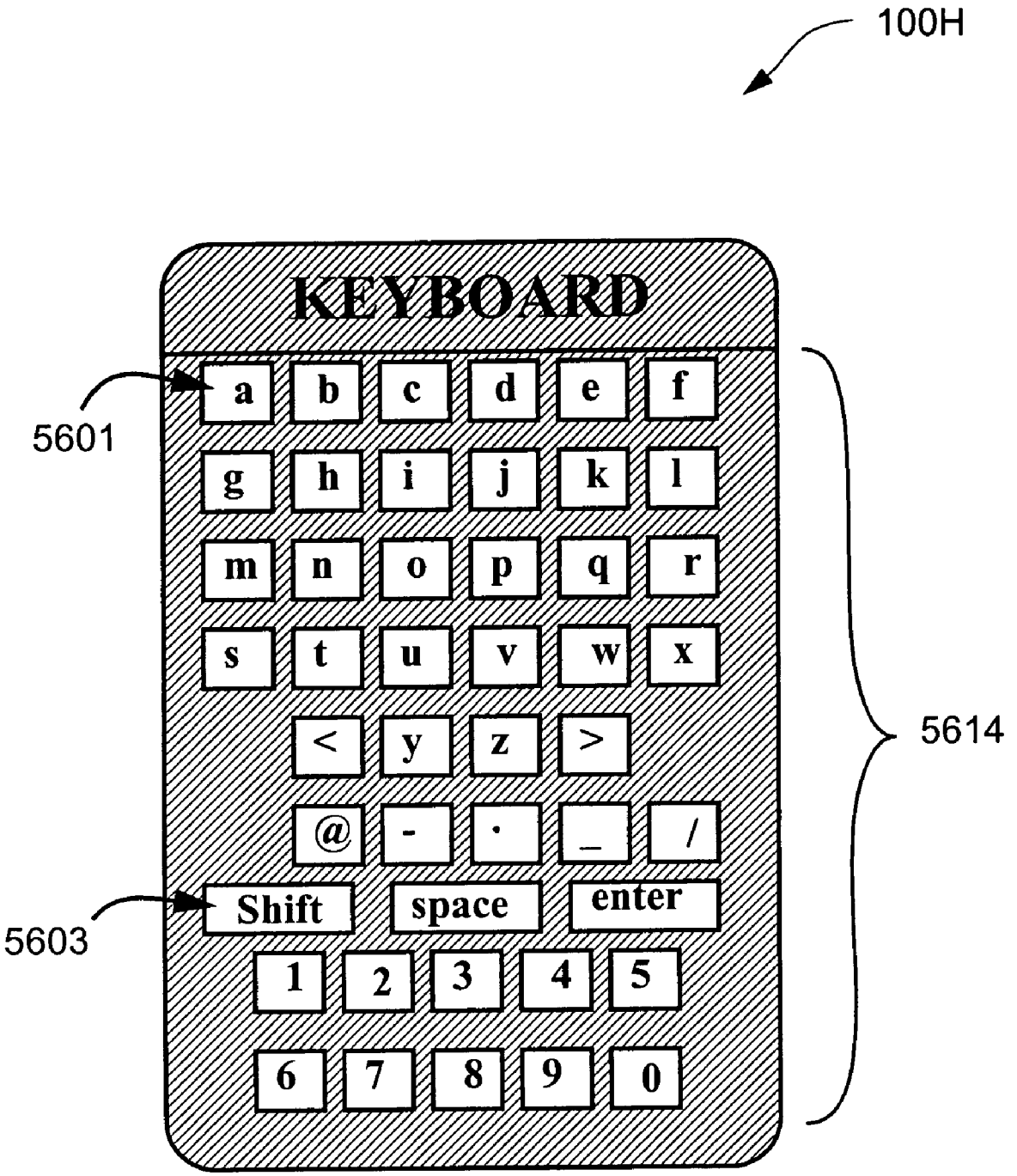
100H
KEYBOARD
a b c d e f
g h i j k l
m n o p q r
s t u v w x
< y z >
@ - . _ /
Shift space enter
1 2 3 4 5
6 7 8 9 0
5601
5603
5614

Fig. 56

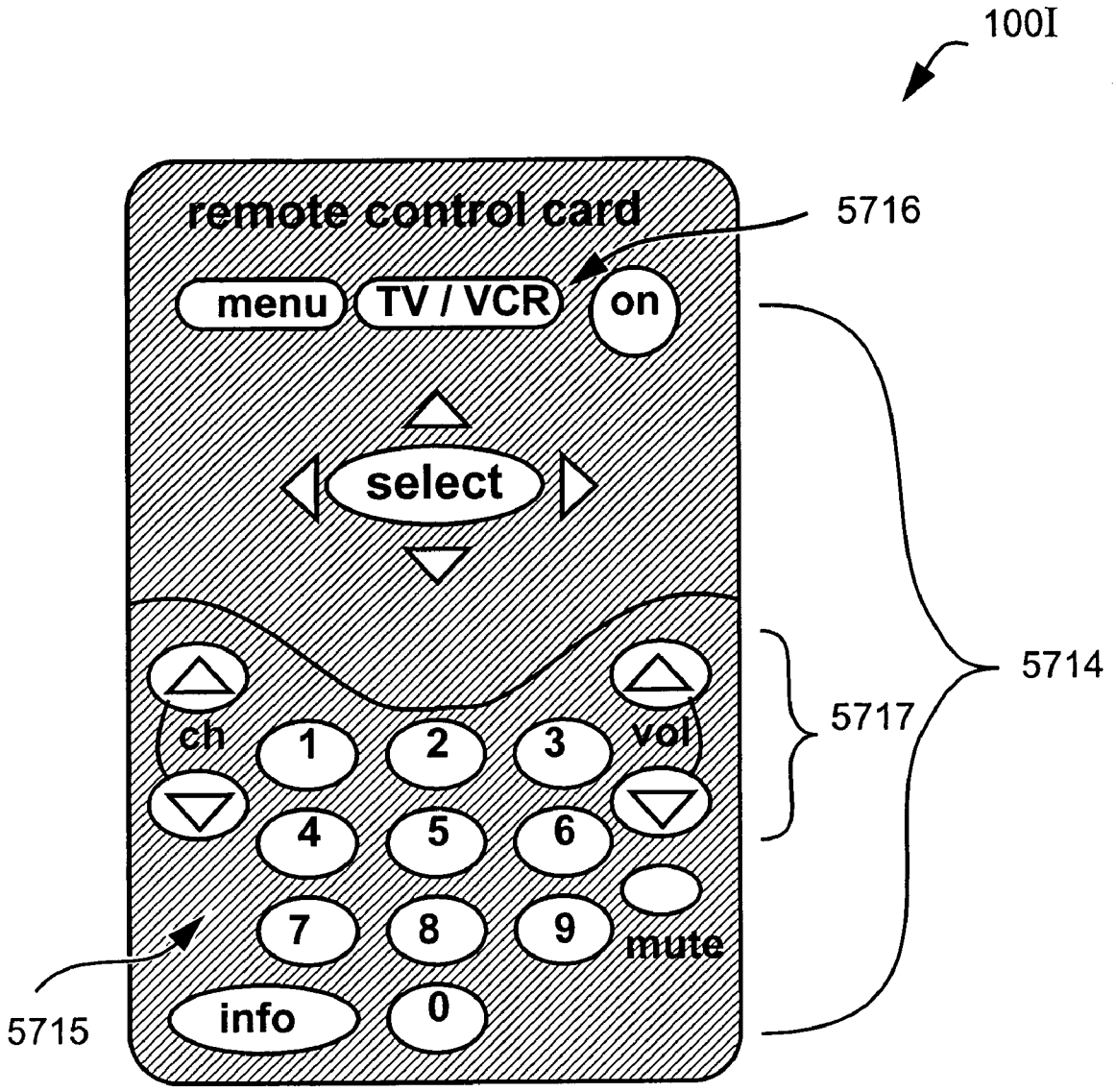
100I
remote control card
5716
menu
TV / VCR
on
select
5714
5717
ch
1
2
3
vol
4
5
6
7
8
9
mute
info
0
5715

Fig. 57

USER INPUT DEVICE

TECHNICAL FIELD OF THE INVENTION

The present invention relates generally to the field of signal processing and, in particular, to a user input device.

BACKGROUND

Infrared (IR) remote control devices (or remote controls) are known, and can be used to control electronic appliances such as televisions, video recorders, stereo systems, set-top boxes, personal computers etc. For example, wireless keyboards and wireless mice can be used to operate a personal computer.

Infrared data transmission in such remote control devices is typically achieved by alternating an Infrared Light Emitting Diode (LED) between two states (i.e., an OFF state and an ON state). In the OFF state, the LED is kept powered down and in the ON state, the LED is rapidly powered on and off at a predetermined frequency. This predetermined frequency is known as the 'carrier frequency'.

Several methods can be used to encode data based on the above-mentioned ON and OFF states. One such method is referred to as 'pulse code modulation', where each bit of a data transmission is encoded by a fixed length duration in one of the two states. Typically, the OFF state represents a '1' bit, and the ON state represents a '0' bit. Another method of encoding data is referred to as 'pulse frequency modulation' where each symbol consists of an ON pulse followed by an OFF pulse. The length of the ON pulse is static while the length of the OFF pulse varies depending on the value of the symbol. Still another method of encoding data based on the above-mentioned two states is referred to as 'pulse position modulation' where each symbol is encoded by the position of an ON pulse within a longer, fixed length, OFF period. One variation of the pulse position modulation is referred to as 'four pulse position modulation, where the ON pulse can occur in one of four positions, thus encoding two bits per data symbol.

Most protocols for infrared transmission utilize a carrier frequency within the range of 32 to 56 kHz. Such protocols also vary in message format, according to the presence and size of data bits, device identifier bits, parity and check bits, sequence bits and start/stop conditions. Remote controlled appliances are typically designed to operate using one particular protocol, and are generally supplied with a remote control device designed to work specifically with that appliance. As a result, many households have several remote control devices to operate individual devices within the same room.

One known method for alleviating the need for different remote control devices for each particular appliance is to combine the functionality of all such remote control devices into one "universal" remote control device. The simplest type of universal remote control device is nothing more than a single remote control device capable of controlling more than one type of appliance. However, such a remote control device adds the demand that all appliances controlled by the remote control device must use the protocol used by the remote control device. In many cases, various appliances are purchased from different manufacturers and vendors. Thus, a particular universal remote control device will generally be unable to control all such appliances.

A reconfigurable remote control device is an advanced version of a universal remote control device, where the functionality of at least some input keys of the remote control device can be reconfigured after the remote control device has been purchased. One such reconfigurable remote control device transmits data using only one protocol. However, the input keys of the remote control device can be reconfigured with different codes as required. Other reconfigurable remote control devices can be configured to transmit data using one of several known protocols.

Most conventional universal remote control devices utilize a keyboard method of input data entry. Some additionally use liquid crystal displays (LCD) in order to provide feedback to the user, such as indicating the current function of certain keys.

Some universal remote control devices provide a touch-sensitive LCD to replace at least some portion of a keyboard configured on the remote control device. However, most retain at least several "hard" keys. The LCD provides the opportunity for a user or manufacturer to customize not only the functions provided by the remote control device, but also the method of interfacing used by the remotely controlled appliance or device itself.

While some reconfigurable remote control devices can only be reconfigured using a limited range of protocols and codes known by each particular remote control device, there are several known methods that can be employed to load additional protocols onto such remote control devices. One such method is commonly referred to as 'learning'. One universal remote control device, which utilizes the learning method, is equipped with a receiver, configured to detect transmissions by other remote control devices. In order to program a code onto this universal remote control device, the user must select "learning mode" on the remote control device (i.e., the learning remote control device), and then use another remote control device which already knows the particular code to transmit the required code to the learning remote control device. The learning universal remote control device then stores a representation of the received code in an on-board memory device, ready to be played back at a later stage.

The main disadvantage of the above 'learning' method is that programming the remote control device using the method is tedious and time consuming since a lot of keys need to be pressed. Additionally, a user must also have another pre-configured remote control device available in order to provide all of the codes to program onto the learning remote control device. If a new universal remote control device is purchased at a later date, the learning process has to be repeated again. Further, if the codes to be learned contain data that varies from message to message, such as sequence bits or numbers, then a remote control device using the learning method is not always able to recognise such sequence bits. Thus, these bits are not able to be reproduced in the correct manner, by the remote control device, when re-transmitting the codes.

Another known method of reconfiguring a remote control device provides the remote control device with the ability to read data from a removable storage medium, such as a control card or smart card. The card has sets of code data and programming stored thereon. The code data is configured to allow the remote control device to operate various appliances (e.g. a television, VCR, cable box, Internet access device or other electronic device). The remote control device is provided or sold to a user essentially "empty" of such code data. The card allows a one-time transfer of a single device code (i.e., code data needed to remotely operate a particular electronic device) from the card into on-board, non-volatile memory of the remote control device. However, such a remote control device is limited as to the number of device

codes that can be stored in the non-volatile memory. Further, these stored device codes cannot be easily changed or replaced once the device codes have been loaded into the non-volatile memory. Still further, the user interface of such a remote control device is fixed and cannot be readily changed according to the circumstances of use. In the reconfiguring methods described above, several disadvantages are evident. Firstly, a lot of data is required to program a universal remote control device with a particular range of functions that is required to operate a number of appliances remotely. Such data is required since each button of a universal remote control device typically describes an entire transmission sequence for the particular button at a low level, leading to a lot of data repetition and redundancy. The data repetition and redundancy raises the cost of manufacturing and purchasing such a remote control device since faster processors, more memory and more powerful batteries must be used to power such remote control devices. Secondly, the user interface of a keypad based universal remote control device is fixed, and cannot be readily changed according to the circumstances of use. Thirdly, software code stored on universal remote control devices cannot be easily changed.

Some reconfigurable remote control devices are preconfigured to have existing functions or protocols activated infrequently. For example, a function may be activated on such a remote control device upon purchase of the remote control device. One such remote control device utilizes a bar code displayed on an appliance in a location that is accessible to the remote control device. The remote control device is equipped with a bar code reader and upon reading a bar code from the appliance corresponding to a known configuration, the remote control device is reconfigured to enable remote operation of that appliance. The bar code label contains a data pattern, which identifies the type of appliance and the remote control encoding format to which the appliance responds. If the remote control unit detects a recognizable bar code pattern during the period that the bar code reader is enabled, then the remote control unit proceeds to analyze the identification data. If the appliance type and infrared format are supported by the remote control device, then the remote control reconfigures its programming to match the new appliance. If the device or equipment is not supported by the remote control device, then the remote control device simply remains unchanged in its previous configuration.

Another known remote control device uses a method where prior to receiving a first remote "power on" command, a remotely controlled appliance periodically emits an infra-red "squawk" signal, which encodes information used to identify the appliance. When a "power on" button is pressed on the associated remote control device, the remote control device briefly listens for such a squawk signal before sending the currently configured power on code. If such a squawk signal is detected, the remote control device reconfigures itself to enable operation of the appliance and then sends the correct power on signal to the appliance, prompting the appliance to stop sending further "squawk" signals.

However, the appliance barcode remote control device and the 'squawk' signal remote control device both require that an associated remote control device have prior knowledge of all appliances that can be supported by the remote control device. Any reprogramming of the associated remote control device needs to be performed using one of the methods described above. Additionally, such remote control devices may not be able to be used with existing appliances that are not suitable configured.

Another known method for activating a remote control device to operate with a particular protocol works by configuring the remote control device in order to enter a mode where a single command is transmitted using all known protocols, one at a time. When the user of such a remote control device detects the correct response by the controlled appliance, the remote control device is instructed by a further user selection to stop probing and to send all subsequent commands using the protocol, which instigated the correct response. Such a remote control device is simple to implement, but requires the user to go through an unintuitive protocol selection process, which can also interfere with other appliances.

Still another known remote control device comprises a transparent touch sensitive surface. A control card with a printed user interface on its upper surface can be placed underneath the transparent touch sensitive surface. The remote control device switches to a different operating mode based on a physical property (e.g., a notch) of the card. While providing added versatility, this remote control device is limited to a fixed set of cards. Further, the remote control device is limited to a fixed set of protocols, which are pre-installed on the remote control device. Still further, this remote control device is limited to a predetermined fixed set of functions.

Some appliances or devices are configured to accept data from multiple remote control devices simultaneously. For example, in a multi-player game, each player can hold a remote control device, sending the same set of inputs to a single receiving appliance. The remote control devices generally distinguish themselves from each other by means of a user identifier, which is included as part of each message that is transmitted from the remote control device to the receiving device. User identifiers on such remote control devices are typically changed by means of a switch located somewhere on the surface of the remote control device. The switch is capable of being set to one of two or more settings.

An infrared remote control device must store enough characteristics of an infrared protocol to be able to faithfully reproduce the protocol at some later time. The required information may be stored on an individual button-by-button basis, or as part of a global structure referenced by individual buttons. In the case of a global protocol structure, each button has some associated information to be used in conjunction with the global information in order to produce a unique code. One known method of representing protocol information utilizes a series of instructions, either executed directly or interpreted by a program being executed on a microprocessor. Another known method of representing protocol information counts the number of pulses during each ON period, and records the number of pulses together with the duration of each OFF period. These periods are then grouped into categories having similar sizes, and stored as a sequence of category identifiers.

In each of the infrared remote control devices described above, the amount of data required to be stored on the remote control device for every possible protocol can be large. Some remote control devices are configured to compress the data, for example, by forming categories during a learning process. However, inaccuracies can result during this process which can prevent a protocol from being faithfully reproduced later.

One known remote control device maintains a range of protocols, which are represented by means of a set of properties. Some properties, specifically bit patterns and data formats, are expressed as pointers to one of a finite set of data structures that define these values. While such a

remote control device generally provides a compressed format for storing the protocol data, a finite number of bit pattern types and data formats are supported. Thus, a new protocol depends on a compatible format being found.

Control cards, which can be used with remote control devices, as discussed above, often include some form of readable storage means such as a magnetic strip, an optical code (e.g. a bar code) or an on-board memory chip, for storing data (e.g. a personal identification number) associated with the card. Such control cards can be generically referred to as memory cards. However, control cards including a storage means in the form of an on-board memory chip are generally referred to as 'smart cards'. The data stored in the storage means is generally read by some form of terminal device, which includes a set of electrical contacts, for example.

Some smart cards include a microprocessor integrally formed within the smart card. These smart cards are generally referred to as microprocessor or central processing unit (CPU) cards.

There are several existing smart card systems, which utilize CPU smart cards including a user interface. One of these existing smart card systems utilizes a reader device including a transparent touch panel positioned above the CPU card so that user interface elements printed on a surface of the smart card are visible underneath the transparent touch screen. The reader device is configured to determine the position of a touch on the transparent panel and use data structure information stored within a memory of the card to determine which user interface elements have been pressed. The reader device then sends a data string associated with the selected user interface elements to a remote application.

In one such existing smart card system, the reader device contains an infrared transmitter, which is used to transmit information received from the card to a set-top box connected to a service provider. Due to the large variety of infrared set-top boxes available, which do not necessarily use the same data transmission protocol, each card reader device must be pre-configured to match a certain set-top box. Once such a reader has been configured for one particular set top box, the software code (i.e.,firmware) resident on the reader cannot be easily changed.

In addition, in order to fully utilize the functionality of a particular smart card, software applications must be created or modified in order to recognize the format of messages sent by a reader device associated with the particular card. The message format is typically implemented above the infra-red protocol layer. None of the existing smart card systems include a mechanism which is able to emulate conventional input devices such as a keyboard or mice, and which would enable a smart card used with such a system to work with existing applications without significant modification to the application.

The reader device of the existing smart card system discussed above, while containing an infrared transmitter, is unable to control the multitude of other appliances that use infrared remote control devices. Thus, the smart card reader device is merely another remote control device to be added to the pile of conventional remote control devices which now exists in most households. This is despite the growing trend towards universal remote control devices as described above.

Finally, the reader device described above, while having the potential to operate in a variety of different modes, with different settings, does not provide a mechanism for operating modes and settings to be reconfigured as necessary by a user of the existing smart card system.

Accordingly, the reader device discussed above is generally limited in application to a predetermined number of pre-installed data transmission protocols. These data transmission protocols cannot be easily changed and additional protocols cannot be easily added. Further, the functionality of the reader device discussed above cannot be easily changed. Thus, a need clearly exists for a reader device, which is capable of transmitting data using one of several protocols, where the protocols can be easily changed and additional protocols can be easily added. Further, a need clearly exists for a reader device, the functionality of which can be easily changed in order to allow the control of many different electronic appliances.

SUMMARY OF THE INVENTION

It is an object of the present invention to substantially overcome, or at least ameliorate, one or more disadvantages of existing arrangements.

According to one aspect of the present invention there is provided a remote control device configured with a first communication protocol for communicating transmission data with at least one of a plurality of predetermined apparatus, said remote control device comprising:

a receiving means for receiving protocol data and an associated format function, said protocol data and said format function in combination describing a second communication protocol for communicating with one or more of said plurality of predetermined apparatus; and

a central processing unit for selecting said received protocol data and said format function and for configuring the remote control device to communicate with said one or more of said plurality of predetermined apparatus, wherein said protocol data defines properties of said second communication protocol and said format function is adapted to configure at least a portion of said transmission data for communication with said at least one apparatus according to said second communications protocol.

According to another aspect of the present invention there is provided a device for communicating transmission data with at least one of a plurality of predetermined apparatus, said device comprising:

a memory having one or more portions of protocol data stored therein, each said portion having an associated format function, said protocol data and said format function of each portion, in combination, at least describing a communications protocol for communicating with one or more of said plurality of predetermined apparatus; and

a central processing unit for selecting at least one of said portions of protocol data, and said associated format function, describing at least one of said protocols and for configuring the remote control device to communicate with said one or more of said plurality of predetermined apparatus, wherein said protocol data of said selected portion defines properties of said at least one protocol and said format function of said selected portion is adapted to configure at least a portion of said transmission data for communication to said at least one apparatus according to said at least one protocol.

According to still another aspect of the present invention there is provided a read device for reading an interface card, said card having indicia formed thereon and being configured for insertion into said read device, said read device comprising:

a memory having one or more portions of protocol data stored therein, each said portion having an associated format function, said protocol data and said format function of each

portion, in combination, at least describing a communications protocols for communicating with one or more of a plurality of predetermined apparatus; and

a central processing unit for selecting at least one of said portions of said protocol data, and said format function, describing at least one of said protocols in order to configure the remote control device to communicate with said one or more of said plurality of apparatus, and for communicating a message to said at least one of said apparatus, according to said at least one protocol, upon receiving specific data related to a selection of at least one of said indicia.

According to still another aspect of the present invention there is provided a method of configuring a remote control device device, said remote control device being configured with a first communications protocol for communicating with at least one of a plurality of predetermined apparatus, said method comprising the steps of:

selecting protocol data and an associated format function stored in a memory operatively associated with said remote control device, said protocol data and said format function in combination describing a second communication protocol for communicating transmission data to at least one other of said plurality of predetermined apparatus; and

configuring said read device to communicate with said at least one other apparatus according to said second communications protocol, said protocol data defining properties of said second communication protocol and said format function being adapted to configure at least a portion of said transmission data for communication with said at least one other apparatus according to said second communications protocol.

According to still another aspect of the present invention there is provided a method of configuring a read device for communicating transmission data with at least one of a plurality of external devices, said read device being adapted to accept an interface card, said card having indicia formed thereon and a memory configured adjacent said indicia, said memory having one or more portions of protocol data stored therein, each said portion having an associated format function, said protocol data and said format function of each portion, in combination, describing at least one of a plurality of communications protocol for communicating with at least one of said plurality of predetermined external devices, said method comprising the steps of:

determining specific data related to a selection of at least one of said indicia;

selecting protocol data and an associated format function representing a particular one of said plurality of communications protocols depending on said specific data; and

configuring said read device to communicate with at least one other of said external devices according to said selected portion, wherein said protocol data of said selected portion defines properties of said particular protocol and said format function of said selected portion is adapted to configure at least a portion of said transmission data for communication to said one or more of said external devices according to said particular protocol.

According to still another aspect of the present invention there is provided a method of configuring a remote control device configured with a first communications protocol for communicating transmission data with at least one of a plurality of predetermined apparatus, said read device being adapted to accept an interface card, said card having indicia formed thereon and a memory configured adjacent said indicia, said memory having protocol data and a format function stored therein at least defining a second communications protocol for communicating said transmission data with one or more of said apparatus, said method comprising the steps of:

providing said card to a user for insertion into said read device, wherein a processor of said read device is configured to perform the following steps:

determine specific data related to a selection of at least one of said indicia;

select said protocol data and said format function depending on said specific data; and

configure said read device to communicate with said one or more of said apparatus according to said second communications protocol, wherein said protocol data defines properties of said second communications protocol and said format function of said portion is adapted to configure at least a portion of said transmission data for communication with said at least one apparatus according to said second communications protocol.

According to still another aspect of the present invention there is provided a card reader for reading an electronic card receivable therein, said card reader being adapted for communicating with data controlled equipment, said card having indicia formed thereon and a memory having data stored therein, said data at least describing configuration properties of said card reader, said card reader comprising:

a central processing unit for selecting a portion of said data stored in said memory of said card upon receiving specific data related to a selection of at least one of said indicia following said card being inserted into said card reader, and for reconfiguring said card reader according to said selected portion of said data.

According to still another aspect of the present invention there is provided a card reader for reading an electronic card receivable therein, said card having indicia formed thereon and a memory having data and one or more format functions stored therein, said data and said format functions at least describing a plurality of communications protocols for communicating with predetermined data controlled equipment, said card reader comprising:

a central processing unit for selecting a portion of said data and an associated one of said format functions stored in said memory of said card upon receiving specific data related to a selection of at least one of said indicia following said card insertion, and for reconfiguring said card reader for communication with data controlled equipment according to said selected portion of said data.

According to still another aspect of the present invention there is provided a card reader for reading an electronic card received therein, said card reader being adapted for communicating with data controlled equipment, said card having indicia formed thereon and an electronic memory having data stored therein, said data at least describing configuration properties of said card reader, said card reader comprising:

a touch sensitive substantially transparent membrane having an upper surface configured to be depressible in order to enable selection of one or more of said indicia; and

a central processing unit for reading at least a portion of said data from said memory according to said indicia selection, and for processing at least a portion of said data stored in said memory to reconfigure said card reader according to said selected portion of said data.

According to still another aspect of the present invention there is provided a method of configuring a card reader, said card reader being configured for reading an electronic card and for communicating with data controlled equipment, said electronic card having indicia formed thereon and an elec-

tronic memory having data stored therein, said data at least describing configuration properties of said card reader, said method comprising the steps of:

selecting at least a portion of said data stored on said card upon receiving specific data related to a selection of at least one of said indicia following said insertion; and

reconfiguring said card reader according to said selected portion of said data.

BRIEF DESCRIPTION OF THE DRAWINGS

One or more embodiments of the present invention will now be described with reference to the drawings, in which:

FIG. **1**(*a*) is a perspective view of a smart card configured for use with a computer game;

FIG. **1**(*b*) is a perspective view of another smart card configured for use in numerical data entry;

FIG. **2**(*a*) is a longitudinal cross-sectional view taken along the line II(a)-II(a) of the card shown in FIG. **1**(*a*);

FIG. **2**(*b*) is a longitudinal cross-sectional view taken along the line II(b)-II(b);

FIG. **3** is a perspective view of a reader device configured for use with the smart cards of FIGS. **1**(*a*) and **1**(*b*) of the card shown in FIG. **1**(*b*);

FIG. **4** shows a user inserting a smart card into the reader of FIG. **3**;

FIG. **5** shows a user operating the reader of FIG. **3** after the smart card has been fully inserted;

FIG. **6**(*a*) shows a hardware architecture for a smart card interface system;

FIG. **6**(*b*) shows another hardware architecture for a smart card interface system;

FIG. **7** is a schematic block diagram of the general-purpose computer of FIGS. **6**(*a*) and **6**(*b*) in more detail;

FIG. **8** is schematic block diagram showing the set top box of FIG. **6**(*b*) in more detail;

FIG. **9** is a flow diagram showing a transmit message header process, as performed during the processes of FIGS. **37**, **47** and **48**;

FIG. **10** is a schematic block diagram showing the internal configuration of the reader of FIG. **3**;

FIG. **11** shows the data structure of a card header as stored in the smart cards of FIG. **1**(*a*) and FIG. **1**(*b*);

FIG. **12** shows one or more object structures following the card header of FIG. **11**;

FIG. **13** is a data flow diagram showing the flow of messages within the systems of FIGS. **6**(*a*) and **6**(*b*);

FIG. **14**(*a*) is a perspective view of a smart card configured for accessing a service over the smart card interface system of FIG. **6**(*b*);

FIG. **14**(*b*) shows user interface element objects associated with the smart card of FIG. **14**(*a*);

FIG. **15**(*a*) is a perspective view of another smart card configured for numerical data entry;

FIG. **15**(*b*) shows user interface element objects associated with the smart card of FIG. **15**(*a*);

FIG. **16** is a flow diagram showing steps performed by a user in order to retrieve on-line music, over the smart card interface system of FIG. **6**(*b*);

FIGS. **17**(*a*) to **17**(*e*) show a number of examples of display output available from the system of FIG. **6**(*b*);

FIG. **18** is flow diagram showing a transmit symbol process as performed during the processes of FIG. **48**;

FIG. **19** shows the front face of a smart card configured for use in playing a computer game;

FIG. **20** is a flow diagram showing a process for configuring the reader of FIG. **6**(*b*) to communicate with the set top box of FIG. **6**(*a*);

FIG. **21** is a flow diagram showing a process for determining a communication protocol for the reader of FIG. **6**(*b*); and

FIG. **22** is a flow diagram showing a process for reconfiguring the reader of FIG. **6**(*b*).

FIG. **23**(*a*) shows a tag format for a data sub-object;

FIG. **23**(*b*) shows another tag format for a data sub-object;

FIG. **24** shows the structure of a signal data transmission packet;

FIG. **25** is a schematic block diagram showing a software architecture for centrally controlled infrared transmission;

FIG. **26** is a schematic block diagram showing a software architecture for delegated control infrared transmission;

FIG. **27** shows the structure of a protocol module;

FIG. **28** shows a protocol module list;

FIG. **29** shows the front face of a smart card configured for selecting a protocol to be used by the reader of FIG. **3**;

FIG. **30** is a state diagram showing the manner in which a currently active protocol can change between global, card specific and temporary states;

FIG. **31** is a flow diagram showing a read process performed by the remote reader of FIG. **3**;

FIG. **32** is a flow diagram showing an initialization process performed during the process of FIG. **31**;

FIG. **33** is a flow diagram showing a check card process as performed during the process of FIG. **31**;

FIG. **34** is a flow diagram showing a check card type process as performed during the process of FIG. **33**;

FIG. **35** is a flow diagram showing a check memory card process as performed during the process of FIG. **34**;

FIG. **36** is a flow diagram showing a scan touch panel process as performed during the process of FIG. **31**;

FIG. **37** is a flow diagram showing a process coordinates process as performed during the process of FIG. **36**;

FIG. **38** is a flow diagram showing a process object data process as performed during the processes of FIGS. **33** and **37**;

FIG. **39** is a flow diagram showing a process sub-object data process for checking a tag associated with a current sub-object of a user interface object, as performed during the process of FIG. **38**;

FIG. **40** is a flow diagram showing an update global protocol pointer process, as performed during the process of FIG. **39**;

FIG. **41** is a flow diagram showing an update reader identifier process for processing data contained in an update reader identifier sub-object, as performed during the process of FIG. **39**;

FIG. **42** is a flow diagram showing a download new protocol module process as performed during the process of FIG. **39**;

FIG. **43** is a flow diagram showing a delete protocol modules process, as performed during the process of FIG. **39**;

FIG. **44** is a flow diagram showing a delete protocol module process, as performed during the processes of FIGS. **42** and **43**;

FIG. **45** is a flow diagram showing a set temporary protocol module process, as performed during the process of FIG. **39**;

FIG. **46** is a flow diagram showing a set modifier flags process, as performed during the process of FIG. **39**;

FIG. **47** is a flow diagram showing a transmit message character process, as performed during the process of FIG. **38**;

FIG. **48** is a flow diagram showing a transmit message checksum process, as performed during the process of FIG. **38**;

FIG. **49** is a flow diagram showing a transmit single character process, as performed during the processes of FIGS. **47** and **48**;

FIG. **50** is a flow diagram showing a flush transmission buffer process, as performed during the processes of FIGS. **48** and **49**;

FIG. **51** is a flow diagram showing a wait ten millisecond process, as performed during the process of FIG. **31**;

FIG. **52** is a flow diagram showing an enter low power mode process, as performed during the process of FIG. **51**;

FIG. **53** is a flow diagram showing a timer overflow interrupt service process;

FIG. **54** shows the front face of a smart card configured for selecting a model number corresponding to a remotely controlled appliance;

FIG. **55** shows the front face of a smart card configured for upgrading a protocol used by the set top box of FIG. **6**(*b*);

FIG. **56** shows the front face of a smart card configured for use as a wireless keyboard; and

FIG. **57** shows the front face of a smart card configured for use as a universal remote control device.

DETAILED DESCRIPTION INCLUDING BEST MODE

Where reference is made in any one or more of the accompanying drawings to sub-steps and/or features, which have the same reference numerals, those sub-steps and/or features have for the purposes of this description the same function(s) or operation(s), unless the contrary intention appears.

It is to be noted that the discussions contained in the "Background" section and that above relating to prior art arrangements relate to discussions of documents or devices which form public knowledge through their respective publication and/or use. Such should not be interpreted as a representation by the present inventor(s) or patent applicant that such documents or devices in any way form part of the common general knowledge in the art.

Excepting where explicitly distinguished, in the following description, the term "data string" means 'a sequence of bits (i.e. '1' or '0')' and can include American Standard Code for Information Interchange (ASCII) data, floating point data, and binary representations of integer values, for example.

The arrangements disclosed herein have been developed primarily for use with remote control appliances, automatic tellers and network access systems, and will be described hereinafter with reference to these and other applications. The arrangements described herein can be used for accessing services such as home shopping, home-banking, video-on-demand, interactive applications such as games and interactive trading cards, and information access such as city guides, television program guides and educational material. The arrangements disclosed herein can also be used for controlling appliances remotely. However, it will be appreciated that the invention is not limited to any of the above mentioned fields of use.

For ease of explanation the following description has been divided into Sections 1.0 to 8.7, each section having associated subsections.

1.0 Smart Card Interface System Overview

1.1 Smart Cards

FIG. **1**(*a*) shows a smart card **100**A including a planar substrate **112** with various user interface elements **114** (i.e. predetermined areas, or iconic representations) printed or otherwise formed on an upper face **116** thereof, for example using an adhesive label. For the smart card **100**A, the user interface elements **114** are in the form of a four way directional controller **120**, a "jump button" **122**, a "kick button" **124**, a "start button" **128** and an "end button" **130** printed on a front face **116** thereof. Other forms of user interface elements, such as promotional or instructional material, can be printed alongside the user interface elements **114**. For example, advertising material **126** can be printed on the front face **116** of the smart card **100**A or on a reverse face (not shown) of the smart card **100**A. In still other forms of the smart card **100**A, the memory chip **219** can be replaced by a storage means such as a magnetic strip (not shown) formed on one surface of the smart card **100**A.

As seen in FIG. **2**(*a*), the front face **116** of the smart card **100**A may be formed by an adhesive label **260** upon which is printed the user interface in the form of the user interface elements **114**, in this case corresponding to the "End Button" and the Right arrow "button" of the directional controller **120**. The label **260** is affixed to the planar substrate **112**. A home user can print a suitable label for use with a particular smart card **100**A by using a printer. Alternatively, the user interface elements **114** can be printed directly onto the planar substrate **112** or separate adhesive labels can be used for each of the user interface elements **114**.

As also seen in FIG. **2**(*a*), the smart card **100**A includes storage means in the form of an on-board memory chip **219** for storing data associated with the user interface elements **114**. The smart card **100**A having a memory chip **219** as described above is generally referred to as a "memory card". Thus, the smart card **100**A will hereinafter be referred to as the memory card **100**A. The memory card **100**A also includes electrical data contacts **218** connected to the memory chip **219** and via which reading of the memory chip **219** and writing to the memory chip **219** may be performed.

Alternatively, in other forms of the memory card **100**A, the memory chip **219** can be replaced by storage means in the form of machine-readable indicia such as an optical code (e.g. a barcode) printed on a reverse face (not shown) of the memory card **100**A.

Memory cards such as the memory card **100**A can be utilized in applications where strong security of the memory card **100**A and data stored in the chip **219** of the memory card **100**A, is not required. The memory card **100**A can also be used in applications where it is desired to maintain the cost of manufacturing the memory card **100**A to a minimum. Such smart cards can be used for example, where the memory card **100**A is given away to promote a service and/or to provide access to the service. The memory card **100**A can also be used as a membership card, which provides access to a specific service.

FIG. **1**(*b*) shows another smart card **100**B again including a planar substrate **152** with various user interface elements **154** printed on a front face **156** thereof. In the smart card **100**B the user interface elements **154** are in the form of a numerical keypad **160**, an "OK button" **162**, a "cancel button" **164**, a "clear button" **166** and a "backspace button" **168** printed on the front face **156** thereof. Again, other forms of user interface elements, such as promotional or instructional material, can be printed alongside the user interface elements **154** such as advertising material **158**.

As seen in FIG. **2**(*b*), the front face **156** of the smart card **100**B is formed by an adhesive label **270** affixed to the planar substrate **152** in a similar manner to the memory card **100**A. Again, a user interface in the form of user interface elements **154**, in this case corresponding to the "number 3", "number 6" and "number 9" buttons of the numerical keypad **160** and the "backspace button" **168**, is printed on the adhesive label **270**.

As also seen in FIG. **2**(*b*), the smart card **100**B includes a microprocessor **259** having an integrally formed central processing unit (CPU) **275** and storage means **276**. The storage means **276** generally includes volatile random access memory (RAM) (not shown) and non-volatile flash (ROM) memory (not shown), and can be used to store data associated with the user interface elements **154**, application software code associated with the smart card **100**B and/or information (e.g. a personal identification number) associated with the user and/or manufacturer of the smart card **100**B. The smart card **100**B will hereinafter be referred to as the CPU card **100**B. The CPU card **100**B also includes electrical data contacts **278** connected to the microprocessor **259** and which perform a similar role to the contacts **218** of FIG. **2**(*a*). In particular, the electrical data contacts **278** can be used to send instructions to the microprocessor **259** and to receive data resulting from the execution of those instructions on the microprocessor **259**.

CPU cards such as the CPU card **100**B can be utilized in applications where enhanced user authentication and/or higher levels of security of the CPU card **100**B and data stored in the storage means **276**, is required.

It will be appreciated by a person skilled in the relevant art, that the user interfaces in the form of the user interface elements **114** and **154** can be interchanged for the smart cards **100**A and **100**B. Further, the user interfaces able to be printed by a user and/or manufacturer for the smart cards **100**A and **100**B can take many forms. Memory cards such as the memory card **100**A and CPU cards such as the CPU card **100**B, having a user interface formed on one surface of the card can be referred to as 'User Interface Cards. However, excepting where explicitly distinguished, in the following description, the memory card **100**A and the CPU card **100**B will be generically referred to as the smart card **100**.

1.2 Smart Card Reader

FIG. **3** shows a smart card reader **300** configured for use with both the memory card **100**A and the CPU card **100**B. The configuration of the electrical data contacts **218** and **278** of the memory card **100**A and the CPU card **100**B, respectively, correspond to exposed contacts **307** of the smart card reader **300**, as shown in FIG. **3**. The reader **300** is formed of a housing **301** incorporating a receptacle **304** into which the smart card **100** may be inserted, a viewing area **306** and an access opening **310** configured to accept a smart card **100**. An upper boundary of the viewing area **306** is defined by sensor means in the form of a substantially transparent pressure sensitive membrane **308** or simply "touch panel" spaced above the exposed contacts **307** so as to form the receptacle **304**. It will be appreciated by a person skilled in the relevant art that alternative technology can be used as the touch panel **308**. For example, the touch panel **308** can be resistive or temperature sensitive.

In use, a smart card **100** is inserted by a user into the smart card receptacle **304**, through the access opening **310**, as shown in FIG. **4**. When the smart card **100** is fully inserted into the reader **300**, the touch panel **308** fully covers the upper face **116**, **156** of the smart card **100**. The viewing area **306** preferably has substantially the same dimensions as the upper face **116**, **156** of the smart card **100** such that the upper face **116**,**156** is, for all intents and purposes, fully visible within the viewing area **306** through the touch panel **308**. In this position, the data contacts **218**,**278** of the card **100** engage the exposed contacts **307** so that circuitry (not shown) within the reader **300** can communicate with the memory chip **219** or microprocessor **259** of the card **100**.

When the card **100** is fully inserted into the reader **300**, a user can press areas of the touch panel **308**, as shown in FIG. **5**, overlying the user interface elements **114**, **154**. For the memory card **100**A, the reader **300** deduces which of the user interface elements **114** the user has selected by sensing the pressure on the touch panel **308** and referring to the data stored in the memory chip **219**. For example, if the user places pressure on the touch panel **308** adjacent the "kick button" **124**, the reader **300** is configured to assess the position at which the pressure was applied, refer to the stored data, and determine that the "kick button" **124** was selected.

In contrast, for the CPU card **100**B, the CPU **275** determines which of the user interface elements **154** the user has selected by processing coordinates received from the reader **300** upon the reader **300** sensing pressure on the touch panel **308**, and then the CPU **275** referring to the data stored in the storage means **276** of the microprocessor **259**. In this case, it is not necessary for the reader **300** to be able to read and to be made aware of the data stored in the storage means **276** of the microprocessor **259**. The operation of the CPU card **100**B in relation to the reader **300** will be explained in more detail in Sections 2.0 to 8.6 below.

Information resulting from a user selecting one of the user interface elements **114**,**154** can be used to control an external device, for example, an associated automatic teller machine (of conventional construction and not shown). It will be appreciated from above that the user interface elements **114**, **154** are not, in fact buttons. Rather, the user interface elements **114** are user selectable features which, by virtue of their corresponding association with the data stored in the memory chip **219** or storage means **276**, and the function of the touch panel **308**, operate to emulate buttons traditionally associated with remote control devices.

The reader **300** includes an infrared (IR) transmitter (not shown in FIG. **3**), for transmitting information in relation to user interface elements **114**, **154** selected by the user. Thus, the reader **300** is generally referred to as an 'infra-red' reader. Alternatively, the reader **300** can any include any other form of transmitter such as a radio frequency (RF) transmitter. Upon selection of one of the user interface elements **114**,**154**, the reader **300** causes information related to the selection to be transmitted to a remote console (not shown in FIG. **5**) where a corresponding infra-red or radio frequency remote module can detect and decode the information for use in controlling some function, such as a banking application executing on the automatic teller machine discussed above.

Any suitable transmission method can be used to communicate information from the reader **300** to a remote module, including direct hard wiring. Moreover, the remote module itself can incorporate a transmitter, and the reader **300** a receiver for communication in an opposite direction to that already described. The communication from the remote module to the reader **300** can include, for example, handshaking data, setup information, or any other form of information desired to be transferred from the remote module to the reader **300**.

FIG. **10** is a schematic block diagram showing the internal configuration of the reader **300** in more detail. The reader **300** includes a microcontroller **1044** for controlling the reader **300**, for coordinating communications between the reader **300** and a remote module, and for storing mapping information and firmware, for example. The microcontroller **1044** includes random access memory (RAM) **1047** and flash (ROM) memory **1046**. The microcontroller **1044** also includes a core processor unit (CPU) **1045**. The microcontroller **1044** is connected to a clock source **1048** and a clock controller **1043** for coordinating the timing of events within the microcontroller **1044**. The CPU **1045** is supplied with electrical power from a battery **1053**, the operation of the former being controlled by a power controller **1050**. Alternatively, in one implementation, the CPU **1045** can be supplied with power via a universal serial bus cable (not shown) connected to a reader associated with the power coming from a personal computer or similar device. The microcontroller **1044** is also connected to a beeper **1051** for giving audible feedback about card entry status.

Infra-red (IR) communications, as discussed above, can be implemented using two circuits connected to the microcontroller **1044**, an infra-red transmitter (TX) **1049** for infra-red transmission and an infra-red remote module (RX) **1040** for infra-red reception. The touch panel **308** of the reader **300** communicates with the microcontroller **1044** via a touch panel interface **1041** and the electrical contacts **307**.

An in-system-programming interface **1052** can also be connected to the microcontroller **1044**, to enable programming of the microcontroller **1044** with firmware by way of the microprocessor flash **1046**.

The microcontroller **1044** of the reader **300** preferably includes an associated 'timer interface module (TIM)' **1060** contained within the microcontroller **1044**. The timer interface module **1060** preferably contains a counter, which can be programmed to overflow when the value of the counter reaches a specified value. Additionally, the timer interface module **1060** can be configured to change the value on an infrared transmission pin (not shown) associated with the microcontroller **1044** when the counter reaches the overflow value and another value, specified between zero and the overflow value. Thus, the timer interface module **1060** can be configured to generate a square wave controlling an infrared light emitting diode (not shown) associated with the infrared transmitter **1049**, operating at a specified frequency and duty cycle.

The clock source **1048** of the microcontroller **1044** can be configured as a crystal, for example, having an associated clock frequency (e.g., 4.92 MHz). The operating frequency of the clock source **1048** largely dictates the infrared data transmission rate of the reader **300**. Higher clock frequencies (e.g., 7.37 MHz) can be used to support faster infrared data transmission rates, which can be required by certain infrared data transmission protocols.

1.3 Hardware Architecture

FIG. **6**(*a*) shows a hardware architecture of a card interface system **600**A. In the system **600**A, the reader **300** is hard wired to a personal computer system **700** via a communications cable **603**. Thus, for the configuration of system **600**A, the reader **300** does not require the infra-red transmitter (TX) **1049** for infra-red transmission or the infra-red remote module (RX) **1040** for infra-red reception. Such a reader will be specifically referred to hereinafter as a 'hard wired' reader. Alternatively, instead of being hardwired, the reader **300** including the infrared transmitter (TX) **1049** and the infrared remote module (RX) **1040** can be used with the system **600**A. In this case, an infrared transceiver **654** formed in the personal computer system **700** can be used to communicate with the reader **300**. The personal computer system **700** includes a display device **701**, a computer module **702**, a keyboard **704** and mouse **703**, and will be explained in more detail below with reference to FIG. **7**.

The system **600**A includes the smart card **100** which is programmable and can be created or customized by a third party, who may be a party other than the manufacturer of the smart card **100** and/or the card reader **300**. The third party can be the ultimate user of the smart card **100** itself, or may be an intermediary between the manufacturer and user. In the system **600**A of FIG. **6**(*a*), the smart card **100** can be programmed and customized for one touch operation to communicate with the computer **700** and obtain a service over a computer network **720**, such as the Internet, coupled to the computer **700**. The computer **700** operates to interpret signals transmitted via the communications cable **603** from the reader **300**, according to a specific protocol, which will be discussed below. The computer **700** performs the selected function according to touched user interface elements **114**, **154** and can be configured to communicate data over the network **720**. In this manner, the computer **700** can permit access to applications and/or data stored on remote server computers **650**, **652** and appropriate reproduction on the display device **701**, by way of user manipulation of the reader **300** and card **100**.

FIG. **6**(*b*) shows a hardware architecture of a card interface system **600**B. In the system **600**B, the reader **300** can be programmed for obtaining a service locally at a set top box **601**, that couples to an output interface, which in this example takes the form of an audio-visual output device **616**, such as a digital television set. The set-top box **601** operates to interpret signals **612** received from the reader **300** according to a specific protocol, which will be described below. The signals transmitted from the reader **300** are preferably infrared but may be electrical or radio frequency. The set top box **601** can be configured to perform the selected function according to touched user interface elements **114**, **154** and permit appropriate reproduction on the output device **616**. Alternatively, the set top box **601** can be configured to convert the signals **612** to a form suitable for communication and cause appropriate transmission to the computer **700** via the network **720**. The computer **700** can then perform the selected function according to the user interface elements **114**, **154**, and provide data to the set-top box **601** to permit appropriate reproduction on the output device **616**. The set top box **601** will be explained in more detail below with reference to FIG. **8**.

In one application of the system **600**B, the smart card **100** can be programmed for obtaining a service either remotely or locally. For instance, the smart card **100** can be programmed to retrieve an application and/or data stored on remote server computers **650**, **652**, via the network **720**, and to load the application or data on to the set top box **601**. The latter smart card can be alternatively programmed to obtain a service from the loaded application on the set top box **601**.

Excepting where explicitly distinguished, the systems **600**A and **600**B of FIGS. **6**(*a*) and **6**(*b*) will be hereinafter generically referred to as the system **600**.

FIG. **7** shows the general-purpose computer system **700** of the system **600**, which can be used to run the card interface system and to run software applications for programming the smart card **100**. The computer system **700** includes the computer module **702**, input devices such as the keyboard **704** and mouse **703**, output devices including a printer (not shown) and the display device **701**. A Modula-

tor-Demodulator (Modem) transceiver device **716** is used by the computer module **702** for communicating to and from the communications network **720**, for example connectable via a telephone line **721** or other functional medium. The modem **716** can be used to obtain access to the Internet, and other network systems, such as a Local Area Network (LAN) or a Wide Area Network (WAN).

The computer module **702** typically includes at least one central processing unit (CPU) **705**, a memory unit **706**, for example formed from semiconductor random access memory (RAM) and read only memory (ROM), input/output (I/O) interfaces including a video interface **707**, and an I/O interface **713** for the keyboard **704** and mouse **703**, a write device **715**, and an interface **208** for the modem **216**. The I/O interface **713** also includes the IR transceiver **654** connected to the I/O interface **713** for communicating directly with the reader **300**. A storage device **709** is provided and typically includes a hard disk drive **710** and a floppy disk drive **711**. A magnetic tape drive (not illustrated) is also able to be used. A CD-ROM drive **712** is typically provided as a non-volatile source of data. The components **705** to **713** of the computer module **702**, typically communicate via an interconnected bus **704** and in a manner, which results in a conventional mode of operation of the computer system **702** known to those in the relevant art. Examples of computers on which the arrangement described herein can be practiced include IBM-computers and compatibles, Sun SPARCstation or alike computer system evolved therefrom.

Typically, the software programs such as applications of the system **600** are resident on the hard disk drive **710** and read and controlled in their execution by the CPU **705**. Intermediate storage of the software application programs and any data fetched from the network **720** may be accomplished using the semiconductor memory **706**, possibly in concert with the hard disk drive **710**. In some instances, the application programs can be supplied to the user encoded on a CD-ROM or floppy disk and read via the corresponding drive **712** or **711**, or alternatively may be read by the user from the network **720** via the modem device **716**. Still further, the software can also be loaded into the computer system **702** from other computer readable medium including magnetic tape, ROM or integrated circuits, a magneto-optical disk, a radio or infra-red transmission channel between the computer module **702** and another device, a computer readable card such as a smart card, a computer PCMCIA card, and the Internet and Intranets including email transmissions and information recorded on Websites and the like. The foregoing is merely exemplary of relevant computer readable media. Other computer readable media are able to be practiced without departing from the scope of the invention defined by the appended claims.

FIG. **8** shows the set top box **601** of the system **600**, which can be used to interpret the signals **612** received from the reader **300**. The set top box **601** in some implementations essentially is a scaled version of the computer module **702**. The set top box **601** typically includes at least one CPU unit **805**, a memory unit **806**, for example formed from semiconductor random access memory (RAM) and read only memory (ROM), and input/output (I/O) interfaces including at least an I/O interface **813** for the digital television **616**, an I/O interface **815** having an IR transceiver **808** for receiving and transmitting the signals **612**, and an interface **817** for coupling to the network **720**. The components **805**, **806**, **813**, **815** and **817** of the set top box **601**, typically communicate via an interconnected bus **804** and in a manner which results in a conventional mode of operation. Intermediate storage of any data received from the reader **300** or network **720** may be accomplished using the semiconductor memory **806**. Alternatively, the set top box can include a storage device (not shown) similar to the storage device **709**.

1.4 Programming the Smart Card

As described above, the smart card **100** is programmable and can be created or customized by a third party. For example, with the system **600**, the smart card **100** can be programmed and customized for one touch operation to communicate with the set-top box **601** and/or computer **700** and obtain a service over the network **720**. The smart card **100** can be programmed by means of the write device **715** coupled to the I/O interface **713** of the computer module **702**. The write device **715** has the capability of writing data to the memory chip **219** on the memory card **100**A or the storage means **276** of the microprocessor **259** for the CPU card **100**B. Preferably, data is not able to be written to the storage means **276** unless a predetermined electronic key is first presented to the microprocessor **259**. Depending upon the specific implementation, the write device **715** may also be configured to print graphics on to the front surface **116**,**156** of the smart card **100** using image production software application programs. The write device **715** may also have a function for reading data from the smart card **100**.

The write device can be configured such that the user can insert the smart card **100** into the write device **715** and then enter the required data. A software application can then write the data entered by the user to the memory of the smart card **100** via the write device **715**. If the stored data is encoded for optical decoding such as in the case of a barcode memory card, the write device **715** can print the encoded data onto the memory card **100**A.

For the CPU card **100**B, the microprocessor **259** can be constructed so that once programmed in the manner described, the contents cannot thereafter be casually read.

1.5 Smart Card Data Format

The smart card **100** generally stores a data structure in memory **219**, **276** that describes various card properties and any user interface elements **114**, **154** printed on the smart card **100**. The smart card **100** can also include global properties that specify attributes such as information about the smart card **100**, vendor and a service. Further, user-interface objects, as will be explained in detail below, can specify data to be associated with the user interface elements **114**,**154** printed on the surface of a corresponding smart card **100**.

For the memory card **100**A, data conforming to the format to be described can be copied directly into the memory chip **219** of the smart card **100**. For the CPU card **100**B, data conforming to the format to be described can be stored in the storage means **276** as a file being one file of a file system implemented on the CPU card **100**B. Such a file system will be described in detail below. In either case, to ensure that the cost of the smart card **100** can be kept to a minimum, the amount of data stored on the smart card **100** is kept to a minimum. For example, where the smart card **100** is being used as a music sampler and associated on-line service, the memory **219**, **276** of the smart card **100** does not contain the music itself. The smart card **100** only contains data associated with the user interface in the form of the user interface elements **114**, **154** and certain identifiers, which will be described in detail below. If the smart card **100** has limited storage capacity (e.g. in the case where the smart card **100** utilizes a barcode), the smart code **100** may only include a card identifier as will be explained in detail below.

The user-interface objects referred to above can represent mapping data, which relate the user interface elements **114**, **154** imprinted directly on a surface of the smart card **100**, to commands or addresses (e.g.: Uniform Resource Locators (URLs)). The mapping data includes (X,Y) coordinates that typically define the size and location of user interface elements **114**, **154** on the smart card **100**. The user-interface objects are preferably stored in the memory **219**, **276** of the smart card **100**. Alternatively, the user-interface objects can be stored not on the smart card **100** itself, but in the system **600**. For example, the smart card **100** can store, via the memory **219**, **276** a barcode or a magnetic strip, a unique identifier, which is unique to smart cards **100** having substantially similar user interface elements **114**, **154** and layout. The unique identifier together with the coordinates determined from the touch panel **308**, as a result of a user press, can be transmitted by the reader **100** to the computer **700** or to the set top box **601**, of the system **600**.

The system **600** can have the user-interface objects stored on the computer **700**, set top box **601** or server **650**, which may thus be arranged to perform the mapping from the determined coordinates to a corresponding command, address or data relevant to a service associated with the smart card **100** and a user selection of one of the user interface elements **114**, **154**, in order to provide a desired function represented by the selected user interface elements. In this instance, the data related to the user selected user interface elements **114**,**154** as described above takes the form of coordinates determined by the microcontroller **1044** of the reader **300** as a result of a user applying pressure to a portion of the touch panel **308** which overlays the desired user interface elements **114**,**154**.

Data stored in the smart card **100** includes a card header followed by zero or more objects as described in the following sections.

1.5.1 Card Header

FIG. **11** shows the data structure of a card header **1100** as stored in the smart card **100**. The header **1100** includes a number of rows **1101**, each of which represent four bytes of data. The data is preferably in 'big endian' format. The complete header is 19 bytes long and includes the following fields (described in more detail in Table 1 below):

(i) magic number field **1102**, which includes a constant specifying a smart card as being a valid memory card **100**A or CPU card **100**B. For example, the magic number field **1102** can be used to check or verify that a proprietary card belonging to a particular manufacture is being used;

(ii) versions field **1103**, which includes each version increment that specifies a change in the smart card layout that cannot be read by a reader **300** which is compatible with lower versions of the layout;

(iii) reserved field **1104**, this field is reserved for future use;

(iv) flags field **1105**, which includes flags for a smart card (see Table 2 below);

(v) card identifier field **1110**, which includes two fields—a service field **1106** and a service specific field **1107**. The service field **1106** identifies the service of a corresponding smart card **100** and the service specific field **1107** optionally contains a service-specific value;

(vi) a number of objects field **1108**, which includes a number value representing how many objects follow the header **1100**. This field can be set to zero; and

(vii) a checksum field **1109**, which includes a card checksum of all data on a corresponding smart card **100** excluding the checksum itself.

Table 1 below provides a description of the content of the various (number) fields described with reference to FIG. **11**.

TABLE 1

Field Number	Description (Card Header)
Magic Number	Two byte magic number. A constant that specifies this as being a valid card. Currently defined as the ASCII value for 'i' followed by the ASCII value for 'C'.
Version	One byte version number. Each version increment specifies a change in the card layout that can not be read by a reader that is compatible with lower versions of the layout. This document describes version 1(0x01) of the card format.
Reserved	This data is reserved for future use. Its value must be set to zero.
Flags	Four bytes of flags for this card. (See Table 2). All non-assigned bits must be zero.
Card Identifier	Eight byte card identifier. Card identifiers include two fields - service identifier and service-specific identifier. The service identifier is five bytes and identifies the service associated with the card. The service-specific identifier is three bytes of service specific value.
Number of Objects	One byte. The number of objects following this header. Can be zero.
Checksum	Card checksum, 2 bytes. The card checksum is sixteen bit, unsigned integer sum of all data bytes on the card excluding the checksum.

The card identifier field **1110** comprises an eight-byte card identifier. The card identifier includes two portions (i.e. unit pieces of data), namely, a service identifier and a service-specific identifier. Preferably, the card identifier is arranged so that the service identifier occupies five bytes and the service-specific identifier occupies three bytes of the total card identifier value.

The service identifier contained in the field **1106** may be used to distinguish one service from another or distinguishes one vendor from another. That is, for example, a service can be associated with an application that provides the service to the user of a smart card **100** as distinct from a vendor who can provide multiple services to the user by providing multiple applications. The service identifier can be an identifier to identify the application to be used or application location (e.g. URL).

The card identifier can be used to configure generic smart cards for the system **600**. Generic smart cards are smart cards **100** having a special service identifier that can be used to provide input to a current application already running. The special value for the service identifier, referred to as "the generic service identifier", is 0x0000000001, where '0x' represents hexadecimal notation (i.e. every two characters of the generic service identifier represent the value of a single byte). A generic smart card can be used to send data to a front application already running on the system **600**. For example, a smart card **100** having a keypad user interface that can be used to send text input to an application which has focus or a smart card **100** with personal details that can also be used to submit the personal information stored on the smart card **100** to any application.

A smart card **100** identification authority can assign service identifiers to a vendor when the vendor registers a particular service.

The service-specific identifier contained in the field **1107**, as described above, can be optionally used by the vendor of a particular service to provide predetermined functions associated with that particular service. The use of the service-specific identifier is substantially dependent upon an application being executed on the system **600**. For example,

the service identifier together with the service-specific identifier can be used as a unique identifier for a card **100**. This unique identifier can be used by an application to gain or deny access to a specific feature associated with a particular service, to reproduce a specific-service identifier in a log file in order to confirm or verify that a particular smart card **100** having that value was used to access a service, and to provide a unique identifier that can be matched up with a corresponding value in a database in order to retrieve information about the user of the service (e.g.: name, address, credit card number etc).

Another example of a use for the service-specific identifier can include providing information about a mechanism or mode of distribution of the smart cards **100** (e.g. by mail, bus terminal kiosks, handed out on a train etc). Further, the service-specific identifier can identify what data is to be loaded into the system **600** when a service is accessed.

The foregoing is not intended to be an exhaustive list of possible uses or applications of the service-specific identifier but a small sample of possible applications and there are many other applications of the service-specific identifier of field **1107**.

1.5.2 Card Flags

The flags field **1105** of the header **1100** of FIG. **11** can include three flags.

For the memory card **100**A and the CPU card **100**B, the flags of the flags field **1105** are as follows:

(i) Background beep;

(ii) Background Move; and

(iii) Don't Report Background Coordinates.

Table 2 below provides a description of each of the above flags (i) to (iii). The above flags (i) to (iii) affect the functions that the smart card **100** can perform in a reader **300**, as is defined by the description of each flag.

TABLE 2

Name	Description	Value (hex)
Background Beep	Causes the reader to provide audio feedback whenever the background is touched.	0x0000 0001
Background Move	Causes the reader to send all move events from when the touch panel was pressed on the background until the touch panel is released.	0x0000 0002
Don't Report Background Co-ordinates	Causes the reader to suppress reporting of the co-ordinates of all presses and releases of the touch panel, when they correspond to the background, reporting them instead as (0xFF, 0xFF).	0x0000 0004

1.5.3 Objects

As shown in FIG. **12**, immediately following the card header **1100** of FIG. **11** can be zero or more object structures **1213** defining the objects of a particular smart card **100** and forming part of the data stored on the smart card **100**. Each object structure **1213** comprises four fields as follows:

(i) a type field **1201**;

(ii) an object flags field **1203**;

(iii) a length field **1205**; and

(iv) a data field **1207**.

The structure of the data field **1207** depends on the object type as will be described below.

Table 3 below shows a description of each of the fields **1201**, **1203**, **1205** and **1207** of the object structure **1213**.

TABLE 3

Name	Description (Object Structure)	Length
Type	The type of object (see Table 5).	1 byte
Object Flags	The general object flags that are associated with this object (see Table 4). Note: Additional flags specific to an object type are specified within the data field of the object.	1 byte
Length	The length of the data following this object. This value can be zero.	2 bytes
Data	The data associated with this object. The structure of this data is dependent on the type of object.	Variable

The flags field **1203** of the object structure **1213**, preferably includes an inactive flag and an extended data format flag. Table 4 below shows a description of the inactive flag and the extended data format flag.

TABLE 4

Name	Description (Pre-Object Flag Values)	Value (hex)
Inactive	Indicates to the reader that the object is valid but is to be ignored regardless of object type.	0x01
Extended Data Format	See section 1.6.3.2.1 below.	0x02

For the smart card **100**, there are preferably six object types provided, as follows:

(i) User Interface Element;

(ii) Card Data;

(iii) Fixed Length Data;

(iv) Reader Insert;

(v) No operation; and

(vi) No operation (single byte).

Table 5 shows a description of each of the above object types (i) to (vii).

TABLE 5

Name	Description)	Value (hex)
No operation (single byte)	A single byte object that doesn't have a standard object header. Used to fill spaces on the card, which are too small for a normal object header.	0x00
No Operation	An object that is used to fill blocks of empty space on the card.	0x01
User Interface Element	A user interface element.	(inline) 0x10
Card Data	Contains data that relates specifically to this card. Card data would normally be read by the reader and transmitted as part of the INSERT message on card insertion.	0x20
Fixed length Data	An object that can be used to store fixed length blocks of data on the card.	0x30
Reader Insert	An object that can be used to give instructions to the reader when the card is inserted.	0x40

1.5.3.1 User Interface Element Objects

Each of the user interface element objects of Table 5 define a rectangular area on a smart card **100** and some quantity of associated data that is used to generate an output when the user touches an area of the touch panel **308** over the corresponding rectangular area of the smart card **100**. The origin for the coordinate mapping system is the top left of the smart card **100** in accordance with an International Standards Organization standard smart card held in a portrait

view with the chip contacts **218**, **278** facing away from the viewer and towards the bottom of the smart card **100**. For any reader **300** that does not use this card orientation, the values of corner points on the smart card **100** must be adjusted by the reader **300** for the memory card **100**A or by the CPU **275** for the CPU card **100**B, so as to report a correct "button" press.

The user interface element objects structure preferably has six fields as follows:

(i) a flags field;
(ii) an X**1** field;
(iii) an Y**1** field;
(iv) an X**2** field;
(v) a Y**2** field; and
(vi) a data field which typically includes data associated with the user interface element for example, a URL, a command, a character or name as well as optional commands reconfiguring some aspects of the reader **300**.

Table 6 shows a description of each of the above fields for the described user interface element object structure. A press on the touch panel **308** is defined to be inside an area defined by a particular user interface element corresponding to a user interface element object structure if:

(i) the X value of the press location is greater than or equal to the X**1** value of the associated user interface element object and is strictly less than the X**2** value for that particular user interface element object; and
(ii) the Y value for the press location is greater than or equal to the Y**1** value of the particular user interface element object and strictly less than the Y**2** value.

TABLE 6

Field	Description (User Interface Object Structure)	Size
Flags	Flags specific to this user interface element on the card.	1 byte
X1	X value of the top-left hand corner co-ordinate of this object's rectangle.	1 byte
Y1	Y value of the top-left hand corner co-ordinate of this object's rectangle.	1 byte
X2	X value of the bottom-right hand corner co-ordinates of this object's rectangle.	1 byte
Y2	Y value of the bottom-right hand corner co-ordinate of this object's rectangle.	1 byte
Data	Zero or more bytes of data associated with this object. In memory cards, the actual data is always stored within this field. The size of this field is determined by the object data size minus the combined size of the above fields.	Variable

Overlapping user interface elements are allowed. In this case, if a press is within the bounds of more than one user interface element then the object resulting from the press is determined by a Z order. The order of the user interface elements **114**,**154** on the smart card **100** defines the Z ordering for all of the user interface elements on that particular smart card **100**. The top user interface element is the first user interface element for a particular smart card **100**. The bottom user interface element is the last user interface element for that particular smart card **100**. This allows for non-rectangular areas to be defined. For example, to define an "L" shaped user interface element, a first user interface element object would be defined with zero bytes in the data field, and a second user interface element object would be defined to the left and below the first user interface element object but overlapping the first user interface element object. The second user interface element would contain the data that is to be associated with the "L" shaped user interface element.

The location of a press is reported in "fingels", which represent finger elements (analogous to "pixels" which represent picture elements). The height of a fingel is defined to be 1/256th of the length of an International Standards Organization memory smart card and the width is defined to be 1/128th of the width of an International Standards Organization memory smart card.

The behavior associated with each user interface element **114**,**154** may be modified using one or more flags. For both the memory card **100**A and the CPU card **100**B, each user interface element **154** preferably has seven associated flags as follows:

(i) Beep;
(ii) Move;
(iii) Don't report coordinates;
(iv) Auto repeat;
(v) Do Not Send Data on Press;
(vi) Do Not Send Data on Release; and
(vii) Encrypt Out-going data.

Table 7 shows a description for each of the user interface element flags (i) to (vii).

TABLE 7

Name	Description	Value
Beep	This flag causes the reader to beep when the user interface element is pressed.	0x01
Move	This flag instructs the reader to send all subsequent move events until the touch screen is released.	0x02
Don't Report Co-ordinates	This flag instructs the reader to suppress reporting of the co-ordinates of the associated press or release, reporting them instead as (0xFF, 0xFF).	0x04
Auto-repeat	This element automatically repeats when the press is held on the element.	0x08
Don't Send Data on Press	This causes the associated user interface element not to send the data associated with this user interface element in the press event. The default is to send the data associated with the user interface element in the press event.	0x10
Don't Send Data on Release	This causes this user interface element not to send the data associated with this user interface element in the release event. The default is to send the data associated with the user interface element in the release event.	0x20

1.5.3.2 Card Data

The card data object is used to store data which is specific to a particular card **100**. The data layout for this object has no fixed form. The contents of the card data object are transmitted from the reader **300** as part of an INSERT message when the smart card **100** is inserted into the reader **300**.

1.5.3.3 Extended Data Format

User interface element data stored in user interface element and card data objects may come in two formats: standard data format and extended data format. In standard data format, all data is transmitted by the reader **300**. In extended data format, the data itself is broken up into a sequence of "sub-objects", most of which contain information that instructs the reader **300** to change some aspect of the reader **300** operation (i.e. operational characteristics). The format of the sub-objects, with the exception of the Output Data sub-object, is shown in Table 8 below.

TABLE 8

Name	Description	Size
Tag	A tag identifying the type of object	1 byte
Length	The length of the data associated with the object	1 byte
Value	The data associated with the object	Length Bytes

The structure of the tag portion of a sub-object depends on the value of the most significant bit, and is structured in one of the formats **2301** and **2302** shown in FIGS. **23**(*a*) and (*b*), respectively. For both of the tags **2301** and **2302**, the bits labelled X indicate the type of sub-object associated with the tag.

If the tag **2301** has a most significant bit **2303** which is set, as seen in FIG. **23**(*a*), a non-global change is effected in the reader **300** upon the processor **1045** reading the tag **2301**. In this instance, if the second least significant bit **2305** is set to zero then the associated non-global change is designated to be card specific, meaning that the effect of the change will be lost when the corresponding card **100** is removed from the reader **300**, or when the effect is modified by another sub-object of the same type. In addition, the least significant bit **2307** indicates whether a new setting is to override a current global setting (i.e., indicated by the bit **2305** being set to zero) or for the reader **300** to toggle between the new setting and the global setting (i.e., indicated by the bit **2305** being set to one). Alternatively, if the second least significant bit **2305** is set to one then a temporary change is invoked, where the value of the least significant bit **2307** indicates whether or not the effect of the temporary change is to extend through to a following user interface element **114**, **154** selection by a user.

A most significant bit **2307** which is not set, as seen for the tag **2302** of FIG. **23**(*b*), indicates that a global change will be effected in the reader **300** upon the processor **1045** detecting the tag **2302**. In this instance, the change is not dependent on the presence of the card **100** in the reader **300** or on a certain time period elapsing.

For the smart card **100**, there are preferably ten sub-object types defined, as follows:

(i) Output Data;
(ii) Change user identifier;
(iii) Change global reader application message protocol;
(iv) Change global mouse protocol;
(v) Change global keyboard protocol;
(vi) Change global remote control protocol;
(vii) Download Custom protocol module;
(viii) Delete protocol modules;
(ix) Change temporary transmission protocol; and
(x) Change modifier flags.

An instance of object data **1207** can include any one or more of the above sub-objects types (i) to (x). Table 9 shows a description of the above sub-object types (i) to (viii). A tag (e.g., the tag **2800**) associated with each of the sub-objects (i) to (viii) has a most significant bit which is set to zero.

TABLE 9

Name	Description	Type Value
Output data	This sub-object represents the actual output data associated with the object, and omits the length field to conserve space. The length of the output data is calculated by subtracting the length of all other sub-objects together with the output data tag from the length of the entire object. Thus, this sub-object spans the entire area from the tag to the end of the object that encloses the sub-object.	0x00
Change user identifier	Two bytes are reserved in memory 1047 for a user identifier. This user identifier may be inserted by a protocol module format function, which will be described in section 4.0 below, into any messages that are sent. This sub-object sets the user identifier to the data stored in the first byte of the value field of the sub-object.	0x01
Change global reader application message protocol	The transmission protocol specified by this object should be used as a global reader application message protocol for a particular transmission mode. The data in this sub-object contains one byte identifying the protocol, possibly followed by other bytes specifying other parameters specific to the protocol being selected.	0x04
Change global mouse protocol	The transmission protocol specified by this object should be used as a global mouse protocol for a particular transmission mode. The data in this sub-object contains one byte identifying the protocol, possibly followed by other bytes specifying other parameters specific to the protocol being selected.	0x05
Change global keyboard protocol	The transmission protocol specified by this object should be used as a global keyboard protocol for a particular transmission mode. The data in this sub-object contains one byte identifying the protocol, possibly followed by other bytes specifying other parameters specific to the protocol being selected.	0x06

TABLE 9-continued

Name	Description	Type Value
Change global remote control protocol	The transmission protocol specified by this object should be used as the global remote control protocol for a particular transmission mode. The data in this sub-object contains one byte identifying the protocol, possibly followed by other bytes specifying other parameters specific to the protocol being selected.	0x07
Download custom Protocol module	An infrared protocol module is stored in the value field of this sub-object, and should be loaded into the reader. The newly loaded protocol is activated in any way - an additional sub-object is is required.	0x08
Delete infra-red protocols module	The list of protocol modules is searched for modules with identifiers that match any of those provided in the data bytes of this sub-object. All discovered matching modules are deleted.	0x09

Table 10 shows a description of the above sub-object types (ix) and (x). A tag (e.g., the tag **2800**) associated with each of the sub-objects (ix) to (x) has a most significant bit which is set to one.

TABLE 10

Name	Description	Type Value
Change temporary transmission protocol	The infrared protocol identifier by this object should be used. The data in this sub-object contains one byte identifying the protocol, possibly followed by other bytes specifying other parameters specific to the protocol being selected.	0x1
Change modifier flags	A special reader buffer contains a set of flags, which toggle certain modifier bits, which can be applied to outgoing messages. For example, in a keyboard protocol, pressing a SHIFT key might cause the following character to be transmitted with a bit that indicates that a SHIFT key is being held down.	0x2

Typically only the "object data" sub-object should be processed on release events, as described above.

For the smart card **100**, sixteen flags are typically defined for the 'change modifier flags' sub-object, as follows:

(i) LShift;
(ii) RShift;
(iii) LCtrl;
(iv) RCtrl;
(v) LAlt;
(vi) RAlt;
(vii) LWin;
(viii) RWin
(ix) Menu
(x) Fn
(xi) CapsLock
(xii) NumLock
(xiii) ScrollLock
(xiv) LButton
(xv) MButton
(xvi) RButton

Table 11 shows a description of the functions that each of the above flags (i) to (xvi) represent in order to emulate a mouse, keyboard or remote control protocol using a card such as the smart card **100**.

TABLE 11

Name	Description	Value
LShift	The left shift key is currently being held down	0x8000
RShift	The right shift key is currently being held down	0x4000
LCtrl	The left control key is currently being held down	0x2000
RCtrl	The right control key is currently being held down	0x1000
Lalt	The left alt key is currently being held down	0x0800
Ralt	The right alt key is currently being held down	0x0400
Lwin	The left windows key is currently being held down	0x0200
Rwin	The right windows key is currently being held down	0x0100
Menu	The menu key is being held down	0x0080
Fn	The function key is being held down	0x0040
CapsLock	The Caps Lock function is currently active	0x0020
NumLock	The Num Lock function is currently active	0x0010
ScrollLock	The Scroll Lock function is currently active	0x0008
Lbutton	The left mouse button is being held down	0x0004
ScrollLock	The Scroll Lock function is currently active	0x0008
Mbutton	The middle mouse button is being held down	0x0002
Rbutton	The right mouse button is being held down	0x0001

Typically, when processing of a sub-object is performed successfully, the reader **300** sounds a high-pitched BEEP. Conversely, if a failure condition occurs, a low-pitched beep, referred to herein as a 'BOOP' occurs to notify the user of a problem. If a temporary change is effected by a sub-object (e.g. a temporary protocol change or modifier flag change), no beep occurs on successful completion, but a low-pitched BEEP (i.e., a BOOP) is still sounded if a problem occurred during the change.

1.5.3.4 Fixed Length Data

The fixed length data object is used to define a fixed length block on the smart card **100** that can be written to by the computer **700**, for example.

1.5.3.5 Reader Insert

The reader insert object is used to store instructions for the reader **300** when a particular smart card **100** is inserted. This can be used, for example, to instruct the reader **300** to use a specific configuration of infra-red commands to allow communication with a specific set top box (e.g. **601**) or TV.

1.5.3.6 No Operation

The No Operation object is used to fill in unused sections between other objects on a particular smart card **100**. Any data stored in the no operation object is ignored by the reader **300**. Any unused space at the end of the smart card **100** does not need to be filled in with a no operation object.

1.5.3.7 No Operation (One Byte)

The No Operation (One Byte) object is used to fill gaps between objects that are too small for a full object structure. These objects are only one byte long in total.

1.6 Reader Application Protocol

When not operating in keyboard, remote control or mouse emulation mode, the reader **300** uses a high-level datagram protocol that supports both uni-directional and bi-directional communication between the reader **300** and the set top box **601** or computer **700**, for example, referred to as the reader application protocol. The format used for messages from the reader **300** as a result of user interactions with the smart card **100** are of a different format than those that are transmitted to the reader **300**. The messages defined by the reader application protocol can be broken up into fragments at a lower level, depending on the low-level transmission protocol that is currently in use.

1.6.1 Message Types

There are at least seven message event types that can be transmitted by the reader **300**. These message events are as follows:

(i) INSERT: When a smart card **100** is inserted into the reader **300**, and the smart card **100** is validated, an INSERT event is generated by the reader **300** and an associated message is transmitted. This message announces the smart card **100** to a remote module (e.g. the set top box **601**). The INSERT message preferably can include the particular card identifier and allow applications to be started or fetched immediately upon the smart card **100** insertion rather than waiting until the first interaction takes place. The INSERT message preferably includes the contents of the card data object from the smart card **100** inserted into the reader **300** if an object of this type is present on the smart card **100**.

(ii) REMOVE: When a smart card **100** is removed from the reader **300**, a corresponding REMOVE event is generated and a REMOVE message is transmitted to the particular remote module associated with the reader **300**. Like the INSERT message, the associated card identifier can be transmitted along with the message. As the card identifier cannot be read from the now removed smart card **100**, the card identifier is stored in the memory **1047** of the reader **300**. This is a useful optimization as the card identifier is required for all other messages and reading the card identifier from the smart card **100** each time the card identifier is required can be too slow. INSERT and REMOVE messages are not relied upon by the system **600** to control processing. The system **600** is configured to infer missing messages if a message is received and is not immediately expected. For example, if an application detects two INSERT messages in a row, then an application can assume that it has missed the REMOVE message associated with the smart card **100** of the first INSERT message, as typically two smart cards **100** are not inserted into the reader **300** at one time. The application can then take whatever action is required prior to processing the second INSERT message.

Another example of where a missing message can occur is where a hand-held, infrared connected reader **300** as shown in FIG. **6**(*b*), as compared with a wired reader **300** as shown in FIG. **6**(*a*), is being used. Often a user does not point the reader **300** directly at a remote module when inserting or removing cards. This problem can be corrected by the system **600** inferring the INSERT or REMOVE operations based on differing card identifiers in consecutive PRESS and RELEASE pairs.

(iii) BAD CARD: If an invalid smart card **100** is inserted, then the reader **300** is preferably configured to generate a BAD CARD event and to send a BAD CARD message. This message allows an associated remote module to take some action to alert the user to the invalid smart card **100**.

(iv) PRESS: When a touch is detected by the reader **300**, a PRESS event is generated and a PRESS message is transmitted to an associated remote module. The PRESS message can contain details of an associated memory card, the position of the press and the data associated with the user-interface element at that particular position. If there is no user interface element defined for that position (including if there is no user interface element defined on the smart card **100** at all) a PRESS message is transmitted containing details of the associated smart card **100** and the position of the press. If there is no card present in the reader **300** when a PRESS event is generated then a PRESS message is transmitted containing the special "NO_CARD" identifier (i.e. eight bytes of zero—0x00) and the position of the press.

(v) RELEASE: A RELEASE event complements the PRESS event and a RELEASE message can be transmitted in order to inform an application program of the system **600** that a PRESS has been lifted. Every PRESS event preferably has a corresponding RELEASE event. Readers can allow multiple presses to be registered or provide other events that may occur between PRESS and RELEASE messages.

(vi) MOVE: If, after processing a PRESS event, the touch position changes by a certain amount then the finger (or whatever is being used to touch the smart card **100**) is assumed to be moving. MOVE events are generated and MOVE messages are transmitted until the touch is lifted. MOVE events auto-repeat by re-sending the last MOVE messages when the touch position remains stationary. The repeated sending finishes when the touch is lifted and a corresponding RELEASE message is sent. Unlike PRESS and RELEASE events there is no user-interface object involved with MOVE events.

(vii) LOW BATT: A LOW BATT event is generated and a LOW BATT message is transmitted when the battery **1053** in the reader **300** is getting low. This message is transmitted after user interactions to increase the chance that the message will be received by the rest of the system **600**. The sending of the LOW BATT message does not prevent the reader **300** from entering a low power state.

As described above, the card identifier is included in every INSERT, REMOVE, PRESS, RELEASE and MOVE message transmitted from the reader **300** to the computer **100** or set-top box **601**. As an alternative, the card identifier can be transmitted in connection with an INSERT message only. In this instance, upon insertion of a new smart card **100**, the reader **300** generates a session identifier. The session identifier is configured to identify a current session of a card insertion. The session identifier, for example, can be a pseudo-random number represented with two bytes of data or the session identifier can be a number that is incremented each time a smart card **100** is inserted and reset to zero when a predetermined value is reached. In this case, the reader **300** sends an INSERT message to the computer **700** or the set-top box **601**, which includes a card identifier as previously described above and a session identifier which is generated for each new smart card **100** insertion. All subsequent PRESS, RELEASE and MOVE messages need not include the card identifier but will include the session identifier and user interface element object data or press coordinates previously described.

When using a session identifier, the system **600** operates as described above with reference to FIGS. **6**(*a*) and **6**(*b*), except that the set-top box **601** or similar, upon receiving an INSERT message from the reader **300**, stores the session

identifier as the current session identifier and a card identifier as the current card identifier. When the set top box **601** receives a PRESS, RELEASE or MOVE message, the CPU **805** checks that the session identifier is equal to the current session identifier. If so, the CPU **805** sets a card identifier used in all messages to the current card identifier. Otherwise, if the session identifier is not equal to the current session identifier, the CPU **805** informs the user, via the audio-visual output device **616**, that a message has been received without a corresponding INSERT message. The user, for example, is then requested to remove and reinsert the card **100**.

1.6.2 Data Formats

The data format of the reader **300** protocol used in the system **600** is a fixed size header followed by a variable length data field which can be zero bytes or more in length, followed by an eight bit check-sum and complement.

1.6.3 Message Header

The message header is preferably of a fixed length and is prepended to (i.e. appended to, but in front of) all messages transmitted from the reader **300** to a set top box **601** for example. It is necessary to keep the message header as small as possible due to any bandwidth restrictions that may be imposed. Table 12 below shows the format of the message header that is transmitted from a reader **300** to a remote module such as the set top-box **601** for example. The service and service-specific identifier are the same for a given smart card **100**. A service specific identifier is preferably set by a vendor for use with their application. The reader identifier (ID) of Table 12 is also in the header of each message. The reader identifier can be used by an application executing on a server (e.g. the servers **650**, **652**) to distinguish different users, for example, in a multi-player game application.

TABLE 12

Field	Description (Message Header Format)	Bytes
Preamble	Preamble to the message. Value is always 0xAA 0x55 (bit sequence 10101010 01010101). This is to make it easier for a receiving device (e.g., the settop box 601) find the beginning of a message.	2
Version	The version of the user interface card infrared message protocol this messages uses. This version of the protocol is version 1(0x01 in the version field)	1
Type	Type of message. This is one of the values given in Table 10.	1
Reader Identifier	The 16 bit id of the reader that transmitted the message. This number is a pseudorandom generated number that is changed when the battery is replaced in the reader. This is needed to distinguish readers when multiple readers are being used with applications.	2
Service Identifier	Service identifier as stored on the card.	5
Service-specific Identifier	Service-specific identifier as stored on the card.	3

Table 13 shows a table listing the message event types that have been described above.

TABLE 13

Name	Description (Message Type Codes)	Code
INSERT	A card has been inserted into the reader.	'I'
REMOVE	The card has been removed from the reader.	'E'
PRESS	The touch panel has been pressed.	'P'
RELEASE	The press on the touch panel has been released.	'R'

TABLE 13-continued

Name	Description (Message Type Codes)	Code
MOVE	The press position has moved but the press has not been released.	'M'
BADCARD	A card has been inserted however it has not passed validation.	'B'
LOW_BATT	The battery in the reader is getting flat.	'L'

1.6.3.1 Simple Messages

A number of message types are considered simple in that they consist solely of the message header described above followed by the message checksum byte and its complement. For example, a BADCARD message, a LOW_BATT message and a REMOVE message are simple messages. Table 14 shows the format of a simple message.

TABLE 14

Field	Description (Simple Message Format)	Bytes
Header	Message header as defined in Table 11.	14
Checksum	Message checksum. This is the sum of all the bytes in the message.	1
Checksum'	The 1's complement of the checksum.	1

1.6.3.2 Move Messages

MOVE messages are formed of the message header described above followed by two fields defining the coordinates of the touch position on the touch panel **8** of the reader **300**. Table 15 shows the format of a MOVE message.

TABLE 15

Field	Description (Move Message Format)	Bytes
Header	Message header as defined in Table 11.	14
X	The X co-ordinate of the touch position.	1
Y	The Y co-ordinate of the touch position.	1
Checksum	Message checksum. This is the sum of all the bytes in the message.	1
Checksum'	The 1's complement of the checksum.	1

1.6.3.3 Press and Release Messages

Table 16 below shows the format of PRESS and RELEASE messages. PRESS and RELEASE messages, like MOVE messages contain the message header and touch coordinates. In addition, PRESS and RELEASE messages send data associated with a user-interface element if the touch position matches a user-interface element object defined on the smart card **100**. This data is of variable length, the actual size being defined by a corresponding smart card **100**. If the touched position does not match a user-interface element object defined on the smart card **100** (including if no user-interface elements are defined on the smart card **100**), zero bytes of data associated with user interface elements are sent. If there is no smart card **100** in the reader **300** then the service identifiers are all set to zero (i.e. 0x00) and zero bytes of data associated with the user-interface elements are transmitted to the remote module. The data associated with the user interface element normally corresponds to the data associated with the user interface element defined on the smart card **100** but may be modified or generated by processing on the smart card **100** or reader **300**.

TABLE 16

Field	Description (Press and Release Message Format)	Bytes
Header	Message header as defined by Table 11.	14
X	The X co-ordinate of the touch position.	1
Y	The Y co-ordinate of the touch position.	1
Length	The number of bytes of data. Can be zero.	2
Data	The data associated with the user interface element.	Length
Checksum	Message checksum. This is the sum of all the bytes in the message.	1
Checksum'	The 1's complement of the checksum.	1

1.6.7 Insert Messages

INSERT messages are formed of the message header described above and the contents of the card data object from an inserted smart card **100**. Table 17 below shows the format of an INSERT message.

TABLE 17

Field	Description (INSERT Message Format)	Bytes
Header	Message header as defined in Table 11.	14
Length	The number of bytes of data. Can be zero.	2
Data	The data from a Card Data object on the card.	Length
Checksum	Message checksum. This is the sum of all the bytes in the message.	1
Checksum'	The 1's complement of the checksum.	1

FIG. **13** is a data flow diagram showing the flow of the above-described messages within the system **600** for a smart card **100**. The card header **1100** and object structure **1213** are read by the CPU **1045** of the reader **300** which sends a corresponding INSERT, REMOVE, PRESS, RELEASE, MOVE, BADCARD or LOW BAT message to the set top box **601**, for example. The reader **300** can also send remote control data, keyboard data and mouse data to the set top box **601**.

1.7 Example

The operation of the system **600** will now be further explained with reference to the following example. The system **600** is customizable by virtue of a user being able to utilize a number of different smart cards **100** to perform corresponding different operations. For example, with particular reference to the system **600**B, FIG. **14**(*a*) shows a memory card **100**C which according to the user interface elements **1414** printed thereon is configured for the retrieval of on-line music associated with an Internet site entitled "Blues Guitar Masters". The on-line music can be accessed over the system **600**B using the memory card **100**C and then purchased using a CPU card **100**D configured for use with an electronic banking application, as will be explained below with reference to FIGS. **15**(*a*) and **15**(*b*). A person skilled in the art would appreciate that the CPU card **100**D could be replaced by a memory card similar to the card **100**A. Other functions may be performed on the system **600**B, using different smart cards **100**, such as home shopping, ordering home delivery fast food such a pizzas, and the like. In each instance, insertion of an appropriate smart card **100** into the reader **300** causes a corresponding computer application to commence operation, either within the set-top box **601** or the computer system **700**, in order to service user commands entered via the reader **300** and to return appropriate information for audio-visual feedback to the user.

For the memory card **100**C, on-line music is provided as data to the set-top box **601** which permits reproduction of audio and any related visual images on the output device **616** or the display **701** of the computer system **700**. The user interface elements **1414** of the memory card **100**C are in the form of a "play button" **1401**, a "rewind button" **1403**, a "fast forward button" **1405**, a "stop button" **1407**, a "select button" **1409**, a "record button" **1411** and a two-way directional controller **1413**, printed on a front face **1416** of the memory card **100**C.

FIG. **14**(*b*) is a table showing user interface element objects (e.g. **1431**) associated with each of the user interface elements **1401** to **1417**. The user interface element objects (e.g. **1431**) are stored in a memory (not shown) formed within the memory card **100**C similar to the memory **219** of the memory card **100**A. As described above with reference to Table 6 and as shown in FIG. **14**(*b*), each of the user interface element objects (e.g. **1431**) has six fields being a flags field **1420**, an X**1** field **1421**, a Y**1** field **1422**, an X**2** field **1423**, a Y**2** field **1424** and a data field **1425**, describing the position of and data associated with a corresponding user interface element. For example, the flags field **1420** for the select button **1409** is a one byte field set to a hexadecimal value of '0x020' (0x representing hexadecimal notation), indicating that data associated with the select button **1409** is not to be transmitted in a release event, as described above with reference to Table 7. The X**1** field **1421** associated with the select button **1409** is a one byte field set to a value of '0007' indicating the coordinate value of the bottom left hand point **1431** of the user interface element **1409** with respect to the top left point **1433** of the memory card **100**C, as described above with reference to Table 6. The data field **1425** is a variable size field which in the case of the select button **1409** is a value corresponding to an 'Enter' and/or 'Carriage Return' function.

The memory card **100**C also includes a card data object as described above with reference to Table 5. The card data object contains data that relates specifically to a particular smart card **100** and is normally transmitted as part of an INSERT message, upon the smart card **100** being inserted into the reader **300**. In the case of the memory card **100**C, the card data object indicates a URL, 'www.bluesguitarmasters.com', corresponding to the address of the 'Blues Guitar Masters' Internet site. A person skilled in the relevant art would appreciate that the URL is stored in the memory of the memory card **100**C in a digital format corresponding to the ASCII values of the characters making up the URL. Alternatively, a card identifier can be stored in the memory of the memory card **100**C and can be mapped to the URL.

The memory card **100**C also includes a card identifier, as described with reference to Table 1, stored in the memory of the memory card **100**C. The card identifier includes a service identifier which in the case of the memory card **100**C can be mapped to the URL, 'www.bluesguitarmasters.com', corresponding to the address of the 'Blues Guitar Masters' Internet site. The card identifier also includes a service-specific identifier, which in this case is a three-byte vendor identifier related to the vendor of the Blues Guitar Masters Internet site. The service-specific identifier can be assigned by the provider of the service (e.g. the vendor of the Blues Guitar Masters Internet site), and can be equal to any particular three-byte value. Each card **100** associated with the 'Blues Guitar Masters' Internet site, for example, can have a different service-specific identifier.

For the CPU card **100**D, the user interface elements **1514** are in the form of a numerical keypad **1560**, an "OK button" **1562**, a "cancel button" **1564**, a "clear button" **1566**, a "backspace button" **1568**, and a four way directional controller **1570** printed on the front face **1556** thereof.

Similar to the memory card **100**C, each of the user interface elements **1514** of the CPU card **100**D has at least one associated user interface element object (e.g. **1531**) stored in a storage means (not shown) formed within the CPU card **100**D similar to the storage means **276** of the CPU card **100**B. Again, as described above with reference to Table 6 and as shown in FIG. **15**(*b*), each of the user interface element objects (e.g. **1531**) has six fields being a flags field **1520**, an X**1** field **1521**, a Y**1** field **1522**, an X**2** field **1523**, a Y**2** field **1524** and a data field **1525**, describing the position of and data associated with a corresponding user interface element. For example, the X**1** field **1521** associated with the "number 2 button" **1540** of the numerical keypad **1560**, is a one byte field set to a value of "0005" indicating the coordinate value of the bottom left hand point **1541** of the user interface element **1540** with respect to the top left point **1533** of the CPU card **100**D. The data field **1525** of the "number 2 button" **1540** is a variable size field which in the case of the CPU card **100**D value corresponds to a hexadecimal representation corresponding to the ASCII value of the character '2'.

The CPU card **100**D also includes a card data object, as described above with reference to Table 5. In the case of the CPU card **100**D, the card data object indicates a URL (e.g. www.anz.com), corresponding to the address of an electronic banking Internet page. A person skilled in the relevant art would appreciate that the URL is stored in the storage means of the CPU card **100**D in a digital format corresponding to the ASCII values of the characters making up the URL.

Similar to the memory card **100**C, the CPU card **100**D also includes a card identifier, as described with reference to a Table 1 stored in the storage means of the CPU card **100**D. The card identifier includes a service identifier, which in the case of the CPU card **100**D can be mapped to the URL corresponding to the electronic banking application (e.g. www.anz.com). The card identifier also includes a service-specific identifier, which in this case is a three-byte vendor identifier. The service-specific identifier can be related to the vendor of the electronic banking package (e.g. the Australia New Zealand Banking Group Limited). Again, each CPU card **100**B associated with the electronic banking package, for example, can have a different service-specific identifier.

FIG. **16** is a flow diagram showing the steps **1600** performed by a user in order to retrieve on-line music associated with the Blues Guitar Masters Internet site, over the card interface system **600**B. At the initial step **1601**, the user inserts the memory card **100**C into the reader **300**. As will be explained in further detail later in this document, having inserted the memory card **100**C into the reader **300**, an application associated with the Blues Guitar Masters Internet page commences, for example on the server computer **650**, and returns to the set-top box **601** for display on the output device **616** a first menu screen **1720**, as seen in FIG. **17**(*a*), relating to a function to be performed, in this case a selection of Blues Guitar Masters. Then at the next step **1603**, using the reader **300** to select the two-way directional controller **1413**, the user scrolls through the various offerings to make a desired selection, in this case for an artist called Young Dead Guy. In response to the user's selection, a further menu screen **1722**, as seen in FIG. **17**(*b*), is then displayed on the output device **616** advising the user of the possible selections that may be made. At the next step **1605**, the user scrolls the menu screen **1722** by selecting the two-way directional controller **1413**, and makes a further desired selection. In response to the user's selection at step **1605**, a further menu screen **1724** is then displayed on the output device **616** as seen in FIG. **17**(*c*) advising the user of the further possible selections that may be made. In accordance with this example, the user can access a free sample video clip or a full concert music video corresponding to the selection at step **1605**, depending on the 'Quality of Service' that the user wishes to access from the Blues Guitar Masters Internet site. For example, if the user only wishes to access a one-minute free sample of the video clip corresponding to the selection at step **1605**, then the user can select the 'Free Sample' item **1726** on the menu screen **1724**. Otherwise, the user can select the 'Full Concert Video' item **1728** which will require the user to pay some associated fee for service. At the next step **1607**, the user selects the 'Full Concert Video' item **1728**. In response to the user's selection at step **1607**, a further screen **1730** is then displayed on the output device **616** as seen in FIG. **17**(*d*) advising the user to insert a payment card (e.g. the CPU card **100**D) into the reader **300**. The screen **1730** also advises the user of the fee amount and of a 'Biller Code' associated with the vendor of the Blues Guitar Masters Internet site. At the next step **1609**, the user removes the memory card **100**C and inserts the CPU card **100**D into the reader **300**. In accordance with the present example, at the next step **1611**, the user presses one or more user interface elements **154** representing a personal identification number (PIN) by applying pressure to the touch panel **308** on or adjacent to each of the associated user interface elements **154**. As will be explained in further detail later in this document, in response to the user entering the personal identification number, the CPU card **100**D can buffer the personal identification number in an input buffer and compare the buffered personal identification number to a personal identification number stored in a storage means (not shown) of the CPU card **100**D. If the CPU card **100**D determines that the entered personal identification number is identical to the stored personal identification number then an application associated with the banking application Internet site commences, for example on the server computer **652**, and returns to the set-top box **601** for display on the output device **616** a conventional banking application menu screen relating to a function to be performed, in this case a selection enabling the payment of the specified amount to the vendor identified by the displayed biller code. At the next step **1613**, the user utilizes the user interface elements **1514** of the CPU card **100**D to operate the banking application in order to complete payment for the full concert music video of the young dead guy. Once payment is completed, the Blues Guitar Masters application then retrieves the selection (i.e. the full concert music video of the Young Dead Guy), which is then streamed to the set-top box **616** for appropriate output as seen in FIG. **17**(*e*). Since the music video is, in effect, a series of "live" images, as compared to the substantially static images of the menu screens **1720**, **1722** **1724** and **1730**, the music video may advantageously be obtained and/or streamed from another location on the computer network **720** not associated with the generation of the menu screens **1720**, **1722**, **1724** and **1730**.

2.0 Reader Infra-Red Data Transmission Architecture

As described above, the reader **300** is a hand-held, battery powered remote control device that interfaces a substantially transparent touch panel **308** with a smart card **100** to provide a customizable user interface. The reader **300** can be used with audio-visual output device **616**/set top box **601** equipment to provide a simple, intuitive interface to consumer services in a home environment.

Any suitable transmission method can be used to communicate information from the reader **300** to a remote

appliance module, including direct hard wiring, as described above. When the reader **300** is directly hard-wired to a device (e.g. the computer module **702**), for example, as shown in the system **600**A of FIG. **6**(*a*), the reader **300** is configured primarily to act as a user input device for personal computers (e.g. the computer system **700**).

Alternatively, when the reader **300** is configured for infra-red data transmission, for example, as shown in the system **600**B of FIG. **6**(*b*), the reader **300** can be programmed for obtaining a service locally at a set top box **601**, that couples to an output interface, which in this example takes the form of an audio-visual output device **616**, such as a digital television set. The reader **300** can also be used to control any appliances that are fitted with an infra-red receiver, and which have been conventionally been controlled using an infra-red remote control device, keyboard, pointing device, or some combination of the three. Unfortunately, for various reasons, there is no standard protocol used by various infrared devices.

One advantage of the reader **300**, as described herein, is that the reader **300** does not operate exclusively using one infrared protocol so that the reader **300** is not restricted to a particular group of set-top boxes, or a single vendor of receiving equipment at the expense of others.

The reader **300** infrared data transmission architecture as will be described herein, firstly, allows the transmission of data using a wide variety of different infrared protocols that are already in use today. Secondly, the architecture provides a framework allowing easy porting of a range of different protocols to a user of the reader **300** by providing common firmware functions which rely on properties specified by an author, rather than requiring the author to rewrite much of the firmware code. Thirdly, the architecture provides a framework that allows custom protocols to be independently loaded easily into the reader **300** after the reader **300** has been deployed without affecting other protocols already installed in the reader **300**. Fourthly, the architecture allows a smart card **100** to determine the infrared protocol to be used while the card **100** is inserted. Fifthly, the architecture allows a single user interface element to change a currently active protocol for a period of time. Such a period may range from a momentary change valid only while the current user interface element is active, through a change valid while a particular card **100** is present in the reader **300**, to a persistent change that is valid until another persistent change is requested. Such a persistent change remains effective for any subsequent cards that are inserted, unless the persistent change is overridden by the same or a different card **100**.

2.1 Infrared Protocols

The reader **300** can use many infrared protocols for data transmission. Although, the protocols differ in some aspects, there are several common attributes that are shared by a majority of the protocols, as will be discussed below.

2.1.1 Device Modes

As described above, with reference to Tables 9 and 10, the reader **300** can be effected in any one of four different device modes. Three of these device modes represent other existing devices (i.e., remote control, keyboard and mouse). The other device mode represents the reader application protocol. Remote control and keyboard messages are transmitted by the CPU **1045** of the reader **300** only during PRESS and RELEASE events, as described above. Raw data for these device modes can differ from protocol to protocol. For example, in one protocol the 'A' key is represented by the code 0x12, while in another protocol the 'A' key is represented by the code 0x1e.

Further, mouse messages are only transmitted during MOVE events. Raw data for mouse messages can differ from protocol to protocol. For example, one type of mouse device might report absolute coordinates, while another type of mouse device reports co-ordinates relative to the last position.

2.1.2 User Interface Card Messages

The user interface card reader device mode is used exclusively for messages sent according to the reader application protocol. As described above, at the application level, each message transmitted from the reader **300** to the set top box **601** or computer system **700** consists of a sequence of bytes, having a fixed length header **1100**, a variable length body comprising zero or more object structures **1213**. The length of the message is determined by values transmitted within the message header **1213** and the number of objects transmitted. In order to be transported by a particular protocol, a card message must typically be broken up into several fixed size packets.

On the other hand, when the reader **300** is sending remote control, keyboard or mouse messages, which typically transmit one or two bytes of data, each individual packet contains all of the message data for a particular message.

2.1.3 Packet Format

The structure of a message can vary from protocol to protocol. At the highest level, each message can be split up into one or more packets separated by an inter-packet gap **2411**. Preferably, a single packet is utilized per message. The inter-packet gap **2411** is preferably of a set period during which the device does not transmit any data. Such a gap **2411** is used to ensure that repeated messages do not transmit more than necessary, which would increase the rate of battery drainage. As particularly seen in FIG. **24**, a packet **2401** of a message **2410** can consist of one or more frames **2402**, **2403** and **2404**, each of which consists of data **2405** enclosed by start **2406** and stop **2407** bits and optional parity bits **2408**.

While some of the data **2405** can be used to encode command data, other portions of the data **2405** can be used to encode object information such as a device identifier, a user identifier or error detection/correction codes.

2.1.4 Symbol Coding

As described in the Background section, the rate at which an LED is flashed ON and OFF is referred to as the "carrier frequency", and may vary with different protocols. Carrier frequencies employed by most protocols lie within the range of 36 kHz to 56 kHz.

When encoding data, some protocols encode one or more bits at a time into a single atomic unit that is transmitted. These units are referred to as symbols. While most protocols encode only one bit per symbol, there are several which encode more, such as those that use four pulse position modulation. In order to transmit a data string, each symbol of the data string must be encoded to form a combination of OFF and ON states in such a way that (a) each symbol can be easily distinguished from any other possible symbols and (b) the boundaries of each symbol are unambiguous

3.0 Reader Infra-Red Data Transmission System

3.1 Infra-Red Communications Characteristics

3.1.1 Transmission

The infrared transmitter **1049** of the reader **300** is preferably an infrared light emitting diode (LED). Such a light emitting diode is typical of infrared light emitting diodes used in home/commercial remote control equipment.

3.1.2 Reception

The infrared receiver **1040** of the reader **300** is preferably an infrared photo detector module which integrates an infrared filter, a PIN diode (as known to those in the relevant art), amplifier circuitry and discriminator circuitry into a single device.

3.4 Firmware

Infrared data transmission from the reader **300** is preferably implemented using software resident in the memory **1046** and controlled in its execution by the CPU **1045**. As described above, such software is generally referred to as 'firmware'. The firmware of the reader **300** will be describe in detail in section 7.0 below.

Two distinct infrared transmission architectures are described in the following sections. FIG. **25** is a schematic block diagram showing a first firmware architecture **2500**, which is referred to herein as 'centrally controlled infra-red transmission'. FIG. **26** is a schematic block diagram showing a second firmware architecture **2600**, which is referred to herein as 'delegated control infra-red transmission'. The architectures **2500** and **2600** both comprise an infra-red transmission software module **2501** and **2601**, respectively, which operate in conjunction with one of a set of protocol modules **2503** and **2603**, each of which comprise code and data defining a particular protocol. The two architectures **2500** and **2600** differ in the distribution of the functionality between the different modules of the architectures. The modules **2501**, **2503**, **2601** and **2603** are preferably resident in the memory **1046** and controlled in their execution by the CPU **1045** of the reader **300**. As will be explained in more detail below, selection of the appropriate architecture **2500** or **2600** to use for a particular application of the reader **300** is performed on the basis of individual protocols.

3.4.1 Centrally Controlled Infra-Red Transmission

The infrared transmission module **2501** provides two entry points for data transmitted to the reader **300** by the smart card **100**, via other processing software modules **2517**, as follows:

Entry point (**1**): for receiving a single byte of data from the card **100**; and

Entry point (**2**): for completing a packet transmission by flushing an output buffer **2505** (seen in FIG. **25**).

When more than one protocol module **2503** is present within the system, the transmission module **2501** interacts with the protocol that is currently active.

Entry point (**1**) is used whenever any byte is to be transmitted by the reader **300**, for example, to the set top box **601**. A buffer handler **2507** within the infra-red transmission module **2501**, firstly, processes the byte and adds the byte to the output buffer **2505** configured within memory **1047**. The output buffer **2505** stores all bytes that have been submitted for transmission by the reader **300**, but have not yet been sent. The buffer **2505** facilitates the use of infrared protocols that send more than one byte of data at a time. The buffer handler **2507** looks up the currently active protocol module **2505**, firstly, to perform keyboard or remote control code remapping (if required), and secondly, to determine the size of the output buffer **2505** in order to subsequently determine whether the buffer **2505** is full according to a current protocol as defined by the protocol module **2550**. If the buffer is found to be full, the CPU **1045** passes control to the "Buffer Transform" stage **2509**.

The buffer transform stage **2509** determines whether a format function is present within a currently active protocol module **2503**. If so, the format function is invoked by the CPU **1045** to read the data from the output buffer **2505** and to combine the data with other information as required by the protocol defined by the module **2503**, and transforming the data into a stream of symbols which are stored in a symbol buffer **2511**. A format function **2513** defined in the protocol module **2503** returns a value which indicates a number of frames to be transmitted by the reader **300** in a current packet (e.g. the packet **2401**). After the format function **2513** is completed, the CPU **1045** returns control to the buffer transform stage **2509** of the infra-red transmission module **2501**, which then enters an "Infrared Signal Generation" stage **2515**.

If a format function **2513** is not present in the current protocol module **2503**, then the CPU **1045** preferably performs a default action in order to copy the contents of the output buffer **2505** directly into the symbol buffer **2511**. The CPU **1045** then schedules for transmission of enough frames to include all raw data required to be transmitted by the reader **300**.

The infrared signal generation stage **2515** begins by programming the timer interface module **1060** of the microcontroller **1044**, as discussed above, to overflow in one period of the carrier signal. The timer interface module **1060** is preferably also programmed to toggle an infrared output pin of the microcontroller **1044** when half of the carrier signal period has expired, and again when the full period has expired, which effectively generates a signal with a 50% duty cycle. Using the data provided in the protocol module **2503**, the positions of start (e.g. **2406**), stop (e.g. **2407**) and parity symbols (e.g. **2405**) are determined for the current packet to be transmitted by the reader **300**. Data is retrieved from the symbol buffer **2511** for transmission, one symbol at a time. All symbols are transmitted by the reader **300** according to associated symbol definitions, which are also read from the protocol module **2503**, and comprise a data string where a zero bit represents the OFF state, and a one bit represents the ON state.

States are changed by switching control of the infra-red transmitter **1049**, shown as a light emitting diode in FIG. **25**, between the microcontroller **1044**, which emits a steady voltage to keep the light emitting diode powered off, and the timer interface module **1060**, which has been configured as described above to emit a wave at the required carrier frequency.

Entry point (**2**) is generally invoked by the CPU **1045** after checksum characters have been transmitted by the reader **300** with a transmitted packet. For entry point (**2**) of the architecture **2500**, the buffer handler stage **2507** is bypassed, since there are no characters provided when entry point (**2**) is invoked. The purpose of the CPU **1045** invoking entry point (**2**) is to ensure that the end of a message is transmitted by the reader **300** even if the output buffer **2505** of the reader **300** is not full. Otherwise, the last few characters of a message packet can end up being transmitted only when a subsequent message is transmitted by the reader **300**.

In some implementations of the reader **300**, the output buffer **2505** can be merged with the symbol buffer **2511** in order to conserve memory **1047**.

The other software modules **2517** as mentioned above, include modules for processing coordinates supplied by the touch panel **308**, for initializing the card **100** and for processing commands which do not conform to standard interfaces, but are specific to an application resident on the card **100**, for example.

3.4.2 Delegated Control Infra-Red Transmission

The delegated control infrared transmission architecture **2600** is variation of the centrally controlled infrared transmission architecture **2500** described above. The architecture **2600** comprises a buffer handler **2607**, an output buffer **2605**, a buffer transform **2609** and a format function **2613**, and operates in a similar manner to that described above for the architecture **2500**. However, the architecture **2600** can be used to implement different kinds of protocols, which cannot be generated by the infrared signal generation stage **2515** of the architecture **2500**. The format function **2613** controls the infrared transmitter **1049**, so that the protocol module **2603** is responsible for all aspects of transmission other than the initial buffering stage. The architecture **2600** will be further described in the following sections.

4.0 Protocol Modules

As described above, a protocol module (e.g. the module **2503**) is a set of bytes containing data and a format function, which defines an infrared protocol. A protocol module can be stored in the memory **1046** of the reader **300**, or on a portable storage medium, such as the memory chip **219** or the storage means **276** of the cards **100**A and **100**B, respectively. Alternatively, the protocol module can be transmitted directly by a device, such as the computer **700** or set top box **601**, to the reader **300** using a communications link such as an infrared receiver **1040**.

FIG. **27** shows the structure of a protocol module **2700**. The protocol module **2700** comprises a portion **2701** defining the properties of a protocol, such as a protocol identifier, carrier period and the number of symbols per frame, for example. The protocol module **2700** also comprises a portion **2703** defining symbol definitions for each distinct symbol used by a protocol defined by the protocol module **2700**. A key map table **2705** can also be included in the protocol module **2700** for converting a generic key code intended for use with any keyboard or remote control into a key code that complies with the protocol that the transmission is currently using. Finally, the protocol module **2700** also includes a format functions portion **2707** defining a format function for converting a bit stream into a suitable format for transmission by the remote reader **300** according to the protocol identified by the protocol identifier. The protocol properties portion **2701**, the symbol definitions portion **2703**, the key map table portion **2705** and the format functions portion **2707**, will be described in more detail below.

4.1 Protocol Properties

The protocol properties portion of the protocol module **2700** is formatted in a structure, which contains the elements shown in Table 18, below.

TABLE 18

Name	Description	Length
Module syntax version	A version number which indicates the structure of subsequent data. This specification describes version 1.	1 byte
Protocol Identifier	The protocol identifier assigned by a central authority to refer to the current protocol. Values of 0, 0xfe and 0xff are reserved.	1 byte
Flags	A bitfield representing some protocol properties.	1 byte
Output buffer length	The number of raw data bytes to be transmitted at a time when using a generic protocol (not keyboard, Mouse or RC)	1 byte

TABLE 18-continued

Name	Description	Length
Carrier period	The period of a carrier pulse, in microseconds.	1 byte
Chip length	The length of a single chip, in microseconds. A chip is defined to be an atomic time unit - all timings used in the protocol should be multiples of this basic chip length.	2 bytes
Symbols per frame	The number of symbols present in a single frame	1 byte
Bits per symbol	The number of data bits represented by each symbol.	1 byte
Gap length	The length of the gap (e.g., 2411) between two successive packets, in milliseconds	2 bytes
Standard Format function	A pointer to the function called to format application protocol data into the correct bit stream.	1 byte
RC Format function	A pointer to the function called to format remote control data into the correct bit stream.	1 byte
Keyboard Format function	A pointer to the function called to format keyboard data into the correct bit stream.	1 byte
Mouse Format function	A pointer to the function called to format mouse data into the correct bit stream.	1 byte
Keymap Table	A pointer to an lookup table used by the protocol when in keyboard or remote control mode, to translate standard key codes to protocol-specific ones. If this value is NULL, codes are transmitted unchanged.	1 byte
Start definition	A pointer to the structure that defines the way a start symbol should be transmitted	1 byte
Stop definition	A pointer to the structure that defines the way a stop symbol should be transmitted	1 byte
'0' definition	A pointer to the structure that defines the way a '0' symbol should be transmitted	1 byte
'1' definition	A pointer to the structure that defines the way a '1'symbol should be transmitted	1 byte

Additional symbol definition pointers may be present in the protocol properties portion **2701**, as required. The pointers described in Table 18 are interpreted as offsets from the beginning of the protocol properties portion **2701**, eliminating any need for absolute addresses and allowing the same structure to be defined outside the firmware of the reader **300**, as well as conserving space in the memory **1047**.

The flags shown in Table 19, below, are defined for the "flags" field in the protocol properties portion **2701**:

TABLE 19

Name	Description	Value
Bit order	If bit order bit is set, each frame is transmitted most significant bit first. If not, the least significant bit is transmitted first.	0x80
Even parity	If the even parity bit is set, an even parity symbol is inserted at the end of each frame.	0x40
Odd parity	If the odd parity bit is set, an odd parity symbol is inserted at the end of each frame.	0x20

4.2 Symbol Definitions

A symbol definition is required for each distinct symbol used by a protocol. The number of value symbols defined in each protocol module **2700** is equal to two to the power of the number of bits per symbol. In addition, start and stop symbols have associated symbol definitions. If two symbols are identical (e.g. in many protocols, a start symbol is simply a '0' symbol and a stop symbol is a '1' symbol), the pointers associated with each of the two symbols may refer to the

same symbol definition structure in order to conserve memory **1047**.

Symbol definitions have a structure as shown in Table 20.

TABLE 20

Name	Description	Length
Number of chips	The number of chips of predefined length that make up this symbol	1 byte
Chip pattern	For each bit, a 0 indicates that the infrared transmitter (i.e., the LED) should be in the OFF state, and a 1 indicates that the LED should be in the ON state. The first bit to be transmitted is the least significant bit of the first byte. Subsequent bits are retrieved by moving left within the byte, and moving on to the next byte in the sequence after a byte is exhausted. There should be enough bytes in this sequence to accommodate all the bits required by the previous field.	0 or more bytes

4.3 Format Functions

The format function of a protocol module (e.g. the module **2700**) converts the data in the output buffer **2505** into a bit stream which defines the way in which a packet is transmitted by the reader **300**. Data to be processed by one or more format functions is read from the output buffer **2505**, configured within the memory **1047** (i.e., random, access memory (RAM)), into the format functions portion **2707**. After the data has been processed in accordance with one or more of the format functions, the data is placed in the symbol buffer **2511**, also configured within memory **1047**. The symbol buffer **1047** must include all data bits that are to be transmitted by the reader **300**, including bits representing sequence numbers, checksum, device identifiers, user identifiers and any other data demanded by the protocol defined by the protocol module **2700**.

The number of bits generated by a format function is equal to the frames per packet multiplied by the symbols per frame multiplied by bits per symbol. The latter two values (i.e. symbols per frame and bits per symbol) are defined in the protocol properties portion **2701** of the protocol module **2700**. The number of frames in a current packet to be transmitted by the reader **300** is determined by the format function of the protocol module **2700**, and returned by the format function portion **2707** to a caller module (e.g. the module the buffer transform **2509**) of the format function.

Data to be output by the reader **300** is positioned so that the first eight bits to be transmitted are stored in the first element of an array configured within the transform buffer **2509**, the next eight bits in the second element, and so on. The bit ordering within these bytes is controlled by a bit order flag in the protocol properties portion **2701** of the protocol module **2700**.

Start, stop and parity bits are not inserted into the symbol buffer **2501**, as start, stop and parity bits are automatically inserted by the infrared signal generation stage **2515** at frame boundaries of a message (e.g. the message **2410**) to be transmitted.

The format function portion **2707** of the protocol module **2700** returns a value that indicates the number of frames to be transmitted by the reader **300**.

Each protocol module **2700** of the reader **300** can implement up to four different format functions, with each format function corresponding to one of the four defined device modes (i.e., the remote control, keyboard, mouse and user interface card reader). The same format function can be used for two or more device modes, by ensuring that each of the applicable format function pointers refers to the same address.

4.4 Keymap Table

The keymap table **2705** of the protocol module **2700** is used to convert a generic key code intended for use with any keyboard or remote control into a code that complies with the transmission protocol currently being used by the reader **300**. A keymap table, associated in the keymap table portion **2705**, comprises an array of bytes, indexed by a generic key code, and contains protocol-specific codes used by each key.

Values are translated using the keymap table if the reader **300** is currently transmitting in keyboard or remote control mode.

4.5 Specialized Protocols

Some protocols transmit data too quickly to be able to be handled by a common transmission function. Other protocols use techniques such as frequency modulation, which cannot be easily implemented using such a structure. Such protocols typically require specialized software code to handle every aspect of transmission, which can be provided within the format function, as specified in the delegated control transmission architecture **2600** described above. Further, in the architecture **2600** the format function portion **2707** of the protocol module **2700** indicates that the central infra-red signal generation stage **2515** of the architecture **2500** is not to be entered in the architecture **2600** by setting the number of frames per packet to zero.

4.6 Protocol Module Placement

The firmware maintains, within the memory **1046** (i.e., Flash Memory **1046**) of the reader **300**, a list of protocol modules (e.g. the module **2700**), which are also stored in memory **1046**. In some firmware implementations for the reader **300**, a page size is defined, wherein no two protocol modules **2700** can share a page. Such a page size is defined since FLASH memory must be typically erased at a minimum of one page at a time. Thus, the length of each protocol module **2700** must be rounded up to the next multiple of the basic page size, minus one, since one byte is reserved to store the page length itself. For example, the page size of a typical microcontroller is 64 bytes.

An example of a protocol module list **2800** is shown in FIG. **28**. Each protocol module (e.g. the module **2801**) is introduced by a single byte **2805** indicating the length of the module **2801**, followed by the module **2801** itself. The length of a particular protocol module (e.g. the module **2801**) is represented by the difference between the length of the particular module **2801**, and the minimum allowable length of a protocol module as defined by the page size of memory **1046**. Thus, for example, for the microcontroller **1044**, if the minimum module length is 63 bytes. A 63 byte module (e.g. the module **2801**) would thus be represented by the value 0x0, a 127 byte module (e.g. the module **2802**) by the value 0x40, and so on. Using this structure, a protocol module may exceed 256 bytes in length even though the length field of the protocol module is one byte long

The module list **2800** is searched by the CPU **1045** whenever a different protocol is activated by the reader **300**, or whenever a new module **2700** is added or an old module **2700** is removed from the list **2800**. In order to locate a module **2700**, the firmware being executed by the CPU **1045** of the reader **300** searches the list **2800** from the beginning, skipping over any non-matching modules. Such a search is terminated by the CPU **1045** when a length of 0xff is

encountered, indicating the lack of a module **2700**, or when the limits of the area for storing protocol modules in memory **1046** are exceeded.

When deleting a protocol, any protocols existing beyond the deleted protocol in the list **2800** stored in memory **1046**, are relocated to begin in the newly erased area of the list **2800**.

4.7 Storage and Transfer of Protocol Modules

If a protocol is required that is not supported within the firmware of the reader **300**, a new protocol module **2700** can be loaded into the firmware using a card **100** that contains a download protocol module object. The data on the card **100** is formatted according to the extended data format, as described above in section 1.6.3.2.1.

An extended data sub-object having a tag of 0x08 contains a custom protocol module definition. When such a sub-object is activated (e.g. either on insert of the card **100** into the reader **300** or on press of a user interface element **114**), the data of the sub-object is loaded into the firmware of the reader **300**. The data of the sub-object contains a protocol module **2700** as described above.

Software code for the protocol module **2700** is checked before being downloaded into the memory **1046** of the reader **300**, in order to ensure that the protocol module will not access any data structures or jump to any locations that are deemed to be dangerous or forbidden, as will be described below.

A custom protocol can be given a protocol identifier, which can be used to reference the protocol module directly by any subsequently inserted cards **100**. Special protocol identifiers of 0xf0 to 0xfe are reserved to denote temporary custom protocols, which are overwritten when a new custom protocol with the same identifier is loaded.

If there is not enough space in the memory **1046** present to load a given custom protocol, another protocol is automatically selected by the CPU **1045** for eviction. Protocols currently defined as global protocols, as described in Table 10 above should not be deleted.

5.0 Protocol Selection and Use

The reader **300** has one or more protocols stored within memory **1046** as corresponding protocol modules **2700**. Two factors determine which protocol is to be used for any particular message to be transmitted by the reader **300**. Firstly, the current state of the reader **300** and secondly, instructions provided by a currently inserted card **100** to change protocols.

The protocol module **2700** currently in use based on these two factors is referred to as the currently active protocol. The process of modifying the currently active protocol will be described in detail below.

5.1 Device Modes

Device modes have been described herein in order to enable the reader **300** to emulate other devices. These modes are referred to as a user interface card reader mode, remote control mode, keyboard mode and mouse mode, and will be described in detail below. These device modes are defined rather than relying on software installed in the set-top box **601**, for example, to perform the emulation of the above devices on receiving messages conforming to a particular protocol (e.g. a user interface card application layer), or to allow the reader **300** to control devices that do not recognise the reader application protocol, such as existing televisions, VCRs etc.

Some specific protocol parameter flags, which will be described in section 5.8 below, indicate to the CPU **1045** that the reader **300** is to behave as a different device on certain events. The flags can effect the way that data is encoded before being transmitted by the reader **300**. Each protocol mode is associated with a particular format function. If the author of a protocol module **2700** wishes to use the same format function for more than one protocol mode, then all applicable format function pointers in the protocol properties portion **2701** of the protocol module **2700** can be configured to reference the same code entry point.

When operating in a device mode other than the user interface card reader device mode, user interface card message headers (e.g. the header **1100**) and trailers can be omitted. A "send button output data only" flag, as will be described below, can also be used when the user interface reader device modeis selected for a given message type.

5.1.1 Remote Control and Keyboard Modes

The reader **300** can be configured to be in a remote control mode or a keyboard mode. When in remote control mode or keyboard mode, reader INSERT, PRESS and RELEASE events, as described above, can result in transmissions so as to emulate a wireless remote control or keyboard protocol as known to those in the relevant art.

Many remote control and keyboard protocols use non-standard encodings as key codes. Protocol modules (e.g. the module **2700**) that handle such keyboards can translate standard key mappings in one of two ways. Firstly, a protocol module **2700** can use a lookup table stored in memory **1046**, which is referenced by the protocol properties portion **2701** of the module **2700**. Such a lookup table contains mappings for every possible key code for the particular remote control or keyboard. Secondly, the protocol module **2700** can use a smaller lookup table or another mapping function, handled by custom software code within an associated format function of the module **2700**. Additionally, modifier flags configured within memory **1046** can be set independently to affect the properties of any keyboard or remote control transmission from the reader **300**. Modifier flags generally represent states that instruct the reader **300** to emulate the condition of keyboard keys such as shift (Shift) or control (Ctrl), or mouse buttons. The format function **2700** for a particular keyboard or remote control protocol converts these flags which are maintained by the firmware of the reader **300** into specific codes used by a particular protocol where necessary.

When in remote control or keyboard mode, two raw data bytes are processed per packet to be transmitted by the reader **300**.

5.1.2 Mouse Mode

When in mouse mode, reader MOVE events result in reader transmissions that emulate mouse movements. In this instance, the format function of a currently active protocol module **2700** converts absolute co-ordinates typically transmitted using a generic card reader **300** protocol into relative co-ordinates used by most mouse protocols.

When in mouse mode, two raw data bytes are processed per packet. One of these bytes represent an absolute or relative X co-ordinate, while the other represents an absolute or relative Y co-ordinate.

5.2 Factory Default Protocols

The firmware of the reader **300** is preferably configured to recognize a factory default protocol for each of the device modes (i.e., card reader, remote control, keyboard, mouse). Besides an assigned protocol identifier, factory default protocols can be referenced by using a special protocol identifier of 0xff, for example.

5.3 Global Protocols

The firmware of the reader **300** is also configured to recognize several global protocols, which are to be used in the following situations:

When no card **100** is present in the reader **300**;

When a bad card is present in the reader **300**; and

When a valid card **100** is present, but no alternative non-global protocol is active in the reader **300**.

A global protocol is implicitly selected by the CPU **1045** of the reader **300** with no knowledge of what the details of the global protocol actually are. Separate global protocols can exist, depending on whether the reader **300** is operating in reader, remote control, keyboard or mouse emulation mode.

The global protocols typically do not change as long as the reader **300** is being used in a similar set-top box **601** environment.

The reader **300** is configured such that the global protocols are the protocols used by a target set-top box (e.g. the set top box **601**). If the set-top box to be used with a particular reader **300** is changed, a global protocol for the reader **300** must be changed by either:

Reprogramming the firmware of the reader **300**;

Using a special "protocol selector" card **100** or user interface element **114**, which contains a "set global protocol" sub-object.

A global protocol can be referenced by using a special protocol identifier of zero.

5.4 Card Specific Protocols

A card specific protocol is a protocol that is active until the card **100** that is currently inserted into the reader **300** is removed. If a different protocol is selected, during a PRESS event, as the card specific protocol, the new protocol may simply completely override the existing card specific protocol. Alternatively, the new protocol may override the card specific protocol until the card specific protocol is selected once again by the processor **705**, which will cause the reader **300** to revert to the original card specific protocol.

5.5 Temporary Protocols

A temporary protocol is a protocol, which is active for a certain number of PRESS events. Following the RELEASE event corresponding to the last PRESS event, a currently active protocol reverts to a card specific protocol, or, if such is not present, the global protocol for a system **600**. The period of effectiveness of a temporary protocol can be chosen to be one of the following:

The duration of a current PRESS event and te corresponding RELEASE event; and

The total duration of the current PRESS event, the corresponding RELEASE event, and the following PRESS event and corresponding RELEASE event.

The period of effectiveness of a temporary protocol is specified by the least significant bit **2307** of the tag of a sub-object used to select the temporary protocol.

5.6 Changing the Protocol

A temporary or global protocol can be changed by configuring an object on the card **100** to encode information about the protocol. The object data must be formatted according to the extended data format, described above with reference to section 1.6.3.2.1. Suitable objects include user interface element objects, for protocols which are to be activated by pressing a user interface element (e.g. the user interface elements **2914**), or card data objects, for protocols which are to be activated on insertion of the card **100** into the reader **300**.

An extended data sub-object with a sub-object type of 0x01 changes the temporary protocol of a reader **300**, according to the lower two bits of the tag corresponding to the sub-object, where the tag describes whether the protocol is a card specific or temporary protocol, and the period of effectiveness of the change in the case of the latter. A sub-object with a tag of 0x4, 0x5, 0x6 to 0x7 changes the global protocol associated with standard, remote control, keyboard and mouse modes respectively.

The data stored in the above-described sub-objects includes a protocol identifier, optionally followed by protocol parameter bytes. If not explicitly stated, a protocol parameter byte is taken to equal zero. Each protocol has a protocol identifier preferably assigned to the protocol by a central authority. If the reader **300** does not recognize a particular protocol because the protocol module associated with the protocol is not present in the memory **1046** of the reader **300**, a currently active protocol is not changed and the reader **300** generates a BOOP to alert a user of the reader **300**.

When a global protocol is selected using the special protocol identifier of zero, the remote control, keyboard and mouse mode flags configured within memory **1047** determine which global protocols are to be used during PRESS, RELEASE and MOVE events. Thus, if both keyboard and mouse flags are set, the keyboard protocol is used for PRESS and RELEASE events, and the mouse protocol is used for MOVE events, until the setting expires. If both keyboard and remote control flags are set simultaneously, the processor **705** of the reader **300** assumes that the reader **300** is in keyboard mode and not in remote control mode.

FIG. **30** is a state diagram showing the manner in which a currently active protocol of the reader **300** can change between global, card specific and temporary states. For example, if the reader **300** is using a temporary protocol, as represented by the state **3001**, and a currently inserted card **100** is removed from the reader **300**, as represented by the arrow **3003**, then the reader **300** is reconfigured to use a global transmission protocol as represented by the state **3002**. As another example, if the reader **300** is using the global protocol and a user selects a card-specific protocol, as represented by the arrow **3005**, by using a special "protocol selector" card, as will be described below for example, then the reader **300** will be reconfigured to use the card specific protocol.

5.7 Protocol Identifiers

The following Table 21 displays the special protocol identifiers recognized by the user interface card reader with their meanings:

TABLE 21

Name	Description	Value
Global	This protocol identifier indicates that the current global protocol should be used.	0
Registered	The values of this protocol identifier represent a single known protocol which has been registered with a central protocol registration authority.	0x01–0xEF
Custom Unregistered	Protocols with these identifiers are not registered with the central authority and do not have a unique identifier. Thus, each of these values may be shared with other completely different protocols.	0xF0 to 0xFD

TABLE 21-continued

Name	Description	Value
Factory default	This protocol identifier points to the factory default protocol defined when the firmware was loaded. The factory default protocol cannot be changed.	0xFE
No Protocol	The value of this protocol identifier represents the absence of a protocol and the reader 300 would transmit no signal.	0xFF

All other values can be assigned by a central protocol registration authority.

5.8 Protocol Parameters

Some aspects of transmission using a currently active protocol rely on additional parameters, which are specified at the time that the protocol is selected. The first parameter byte is always a flag byte, which has the following possible values as shown in Table 22 below:

TABLE 22

Name	Description	Value
Send output data only	The header, checksum and any other non-object data such as co-ordinates or lengths are not transmitted while this protocol is active in user interface card reader mode - only the message payload is sent.	0x80
RC mode	The reader should behave as a remote control device. Depending on the protocol, insert, press and release messages might be handled differently to other messages.	0x40
Keyboard mode	The reader should behave as a keyboard device. Depending on the protocol, insert, press and release messages can be handled differently to other messages.	0x20
Mouse mode	The reader should behave as a mouse device. Depending on the protocol, move messages might be handled differently to other messages.	0x10

Any additional protocol parameter bytes can be used to encode settings specific to the protocol being used, and are handled directly by a protocol format function associated with a protocol module. Typically, the additional protocol parameter bytes encode information such as device identifiers.

7.0 Fireware Routines

The firmware resident on the reader **300** will now be described in further below in sections 7.1 to 7.23.

7.1 Main Loop

FIG. **31** is a flow diagram showing a read process **3100** performed by the remote reader **300**. The process **3100** is preferably implemented as software resident in the memory **1046** and controlled in its execution by the CPU **1045**. The process **3100** begins after a reset of the reader **300** has been occurred such as after the reader **300** has been powered down. The process **3100** of FIG. **31** is configured in a "paced loop" manner. That is, the process **3100** is paced by a routine, which generates a 10 millisecond delay. This delay gives adequate service to the necessary routines while providing good latency for the handling of interrupts.

At the first step **3101**, an initialization process is performed by the CPU **1045**. The initialization process is performed in order to initialize configuration registers and will be explained below with reference to FIG. **32**. At the next step **3103**, a computer operating properly (COP) register configured within memory **1046** is cleared indicating that the firmware executing on the reader **300** is not stuck in any recurring loops. The process **3100** continues at the next step **3105**, where a check card process is performed, by the CPU **1045**, to check for any changes in the presence and validity of a particular smart card **100**. The check card process will be explained in more detail below with reference to FIG. **33**. At the next step **3107**, a scan touch panel process is performed by the CPU **1045** to check for any touches on the touch panel **308** by a user. The scan touch panel process will be explained in further detail below with reference to FIG. **36**. At the next step **3109**, a wait 10 millisecond process is performed by the CPU **1045**, and the process **3100** then returns to step **3103**. The wait 10 millisecond process consumes CPU **1045** cycles and will be described in more detail below with reference to FIG. **51**.

7.2 The Initialization Process

After a reset of the reader **300**, all configuration registers configured within the microcontroller **1044** require correct initialization. If a low voltage inhibit (LVI) reset was received by the CPU **1045** then a "possibly depleted battery" flag configured within memory **1047** is set. A low voltage inhibit reset is initiated when a circuit (not shown) within the microcontroller **1044** detects that the supply voltage has fallen below 2.4 Volts. When this kind of reset occurs, a flag is set in a Reset Status Register (RSR) and the initialization process of step **3101** can deduce that the battery **1053** is becoming depleted. For example, when infrared data is being transmitted, the infrared transmitter **1049** consumes high current as the transmitter **1049** is being pulsed. If the battery **1053** is depleted, the supply voltage can dip under the 2.4 Volt threshold during transmission causing a low voltage inhibit reset. After reset, the battery **1053** voltage recovers and the low voltage inhibit reset does not occur until the next high current drain. This gives the remote reader **300** a chance to flag the failing of the battery **1053** to an associated set-top box (e.g. the set-top box **601**) or remote equipment (e.g. the computer **700**) so that the user can be prompted to replace the battery **1053**.

FIG. **32** is a flow diagram showing the initialization process performed at step **3101**, by the CPU **1045**, after a reset has been detected by the CPU **1045**. The process of step **3101** is preferably implemented as software resident in the memory **1046**. The process of step **3101** begins at step **3201** where all registers configured within memory **1046** are initialized to a predetermined default state. At the next step **3203**, a check is performed by the CPU **1045** to determine if the reset was a low voltage inhibit (LVI) reset. If the reset was not a low voltage inhibit reset at step **3203**, then the process of step **3101** concludes. Otherwise the process of step **3101** proceeds to step **3205** where the possibly depleted battery flag is set and then the process of step **3101** concludes.

7.3 Check Card Process

FIG. **33** is a flow diagram showing a check card process as performed at step **3105**. As described above, the process of step **3105** checks for changes in the presence and validity of a smart card **100** in the remote reader **300** and responds accordingly. The process of step **3105** is preferably implemented as software resident in the memory **1046**. The process of step **3105** is performed by the CPU **1045** and begins at step **3301** where if a smart card **100** is inserted in the remote reader **300**, then the process proceeds to step **3302**. Otherwise the process proceeds to step **3307**. At step **3302**, if the card **100** is a new card, that is, the previous state of the reader **300** was such that there was no card **100** in the reader **300**, then the process of step **3105** proceeds to step

3311. Otherwise, the process of step **3105** concludes. At step **3311**, the CPU **1045** executes a check card type process to determine the type and validity of a newly inserted smart card **100**. The check card type process will be described in more detail below with reference to FIG. **34**. At the next step **3312**, the processor **705** determines whether te previous process **3311** indicated a valid card. If so, the process of step **3105** proceeds to step **3313**. Otherwise, the process of step **3105** proceeds to step **3315** where a "BOOP" is sounded and the process of step **3105** proceeds to step **3319**. At step **3319**, a BAD CARD message is transmitted to the set top box **601**, for example, and the BAD CARD message is processed by the CPU **805**.

At step **3313**, a message type variable configured within memory **1047** is set to "INSERT". At the next step **3314** a "BEEP" is sounded by the reader **300** and the process of step **3105** proceeds to step **3316**. If the card **100** inserted in the reader **300** has an associated card data object, at step **3316**, then the process of step **3105** proceeds to step **3317**. Otherwise the process proceeds to step **3318** where the CPU **1045** transmits a message with no object data and the process concludes. At step **3317**, a process object data process is performed by the CPU **1045** using the card data object. The process of step **3317** will be described below in detail with reference to FIG. **38**

If a smart card **100** is not inserted in the remote reader **300** at step **3301**, then the process of step **3105** proceeds to step **3307**. At step **3307**, if this is the first operation of the reader **300** after the reset, then the process concludes. Otherwise, the process proceeds to step **3308** where "Background beep", "Background MOVE" and "No Background Event Co-ordinates" flags configured within memory **1046** are cleared and the card identifier of the header **1100** for the card **100** is set to "NO_CARD". At the next step **3309**, a REMOVE message is transmitted to the set top box **601**, for example, and the REMOVE message is processed by the CPU **805**. The process of step **3305** continues at the next step **3310**, where the active protocol pointer is set to point to the global protocol with user interface card reader device type and the reader **300** reverts all card specific settings to a default state, before the process of step **3305** concludes.

7.4 The Check Card Type Process

FIG. **34** is a flow diagram showing a check card type process as performed at step **3311**. The process of step **3311** is preferably implemented as software resident in the memory **1046** and controlled in its execution by the CPU **1045**. The process of step **3311** begins at step **3401**, where a check memory card process is performed by the CPU **1045** in order to determine whether a valid memory card, as described above, is present in the reader **300**. The check memory card process will be described in detail below with reference to FIG. **35**. At the next step **3403**, if the card **100** inserted in the reader **300** is a valid memory card, as described above, then the process of step **3311** proceeds to step **3407**. Otherwise, the process proceeds step **3413**.

At step **3407**, the card identifier of the card identifier field **1110** for the inserted card **100** and flags (see Table 2) are set to represent a valid memory card and the process of step **3311** concludes.

At step **3413**, the card identifier of the card identifier field **1110** and flags are set to represent an invalid card and the process of step **3311** proceeds to step **3417**. At step **3417**, the card **100** is deactivated by setting the card contacts (e.g. the contacts **218**, **278**) and the process concludes.

7.5 Check Memory Card Process

FIG. **35** is a flow diagram showing a check memory card process as performed at step **3401**. The process of step **3401** is preferably implemented as software resident in the memory **1046** and being controlled in its execution by the CPU **1045**. The process of step **3401** checks whether a valid memory card **100** is inserted in the reader **300**. If a card **100** is present and contains a directory area, as known in the relevant art, configured within memory (e.g. the memory **219**) of the card **100**, then the directory area is searched by the CPU **1045** for an entry containing a value identifying a region of the card **100** as a user interface card image (i.e., a structure conforming to the user interface card data format). If no directory area is configured within the memory of the card **100**, then the beginning of the card **100** is assumed to contain the beginning of the user interface card image. The "magic number" and "checksum" are read from the card header **1100** stored in the memory of the card **100** in order to determine the validity of the card **100**, as described above.

The process of step **3401** begins at step **3501** where the CPU **1045** applies a synchronous reset signal (i.e., as defined in the International Standards Organisation (ISO) Smart Card Standards, "Synchronous Cards, ISO 7816-10 (1999)"), to the card **100** and receives an Answer to Reset (ATR) (i.e., as defined in the ISO 7816-10 (1999) standards) from the card **100**. At the next step **3503** if the card **100** returns four bytes to the CPU **1045** then the process of step **3401** proceeds to step **3505**. Otherwise, the process proceeds to step **3517**. At step **3505** if the four bytes form an ATR then the process of step **3401** proceeds to step **3507**. Otherwise, the process proceeds directly to step **3515** where a 'Card Data Incorrect error' is returned to the calling process **3311** by the CPU **1045**. At step **3507**, a protocol for the card is set according to the ATR. The process of step **3401** continues at the next step **3509** where the CPU **1045** searches the directory area configured within the memory of the card **100** in order to detect an application identifier (i.e., conforming to the standard, "Registration System for Application Identifiers, Amendment 1 (1996): Registration of Identifiers", ISO 7816-5), identifying data associated with the card **100** as being user interface card data. At the next **3511**, if an identifier is found then the process of step **3401** proceeds to step **3513**. Otherwise, the process proceeds directly to step **3515**, as described above. At step **3513**, the CPU **1045** locates the card header **1100** from the directory area and the process proceeds to step **3523**.

If the card **100** did not return four bytes to the CPU **1045**, at step **3517**, then the process of step **3401** proceeds to step **3517**, where the CPU **1045** attempts to read four bytes from the card **100** according to the **12**C protocol for communicating with smart cards. At the next step **3519** if the card **100** did not return any data then the process of step **3401** proceeds directly to step **3529** where a 'Card Not Responsive' error is returned to the calling process **3311** by the CPU **1045**. Otherwise, the process proceeds to step **3521**, where if the first two bytes of the data returned by the card **100** represent the characters 'iC', as described above in Table 1, then the process proceeds to step **3523**. Otherwise, the process of step **3401** returns to step **3505**. At step **3523** the CPU **1045** reads the header **1100** of the card **100**. At the next step **3525**, if the header **1100** is valid then that the process proceeds to step **3527** where a success return code is generated by the CPU **1045**. Otherwise, the process of step **3401** proceeds to step **3515**, as described above.

7.6 Scan Touch Panel Routine

FIG. **36** is a flow diagram showing a process for scanning the touch panel **308** of the reader **300**, as performed at step **3107**. The process of step **3107** checks for touch panel **308** touches that equate with user interface element **114** selections and the CPU **1045** responds accordingly. The process of step **3107** is preferably implemented as software resident in memory **1046**. The process of step **3107** is executed by the CPU **1045** and begins at step **3601** where if the panel **308** is being touched, then the process proceeds to step **3602**. Otherwise, the process of step **3107** proceeds to step **3612**, where if the panel **308** has been touched previously then the process proceeds to step **3614**. Otherwise, the process of step **3107** concludes.

At step **3614**, the message type is set to RELEASE and the process of step **3107** proceeds to step **3605**. The process continues at the next step **3602**, where if this is the first time that the touch has been noticed since there was no touch, then the process proceeds to step **3603**. At the next step **3603**, the CPU **1045** determines if an invalid card (i.e., Bad Card) has been inserted into the reader **300** by checking the result of step **3312**. In the case that a bad card has been inserted into the reader **300**, the process of step **3107** proceeds to step **3615**. At step **3615**, a BAD CARD message is transmitted, by the reader **300**, to the set top box **601**, for example, and the process concludes. If the CPU **1045** determines at step **3603** that the card **100** was valid, by checking the result of step **3312**, or that no card was inserted into the reader **300**, by the checking the result of step **3301**, then the process of step **3107** proceeds to step **3604**. At step **3604**, the type of message is set to PRESS in the message header **1100**. At the next step **3605**, the CPU **1045** determines the touch coordinates (i.e. X, Y coordinates of user press location) via the touch panel interface **1041**. Then at the next step **3606**, the offset and scale functions are applied to the coordinates. The offset and scale functions map the coordinate space of the touch panel **308** to the coordinate space of the card **100**. The process of step **3107** continues at the next step **3607**, where if the CPU **1045** determines that the touch detected at step **3601** was a MOVE and/or no card was inserted into the reader **300**, by checking the result of step **3301**, then the process proceeds directly to step **3609**. Otherwise, the process of step **3107** proceeds to step **3608** where the CPU **1045** executes a process co-ordinates process, which will be explained in further detail below with reference to FIG. **37**. At the step **3609**, a current message is transmitted along with any data, by the reader **300**, to the set top box **601**, for example, and the CPU **805** in the set top box **601** processes the message. The process of step **3107** continues at the next step **3611**, where a BEEP sound is sounded indicating success if a Beep flag (see Table 7) is set either for the currently active user interface element, or for the background (i.e., if no user interface element is active), and the process concludes.

If this is not the first time that a touch has been noticed since there was no touch, at step **3602**, then the process of step **3107** proceeds to step **3616**. At step **3616**, if a Move flag (see Table 7) associated with the currently active user interface element is set, or if an associated Backgorund Move flag is set, then the process proceeds to step **3617**. Otherwise the process of step **3107** concludes. At step **3617**, the message type is set to MOVE and the process proceeds to step **3605**. If it was determined at step **3607** that the message was a MOVE, at step **3609**, then the CPU **1045** sends a MOVE message to the set top box **601**. The CPU **805** processes X, Y coordinates as cursor information and moves a cursor that is displayed on the television **616**. In this case, the next RELEASE message can be interpreted as a command to select the displayed object at the cursor position (e.g. to execute a program, select an item or load a URL). Further, if NO Event Coordinates have been set in the card **100**, then the reader **300** may send the data associated with a user interface object to the set top box **601**, for example, without sending the X, Y coordinates of the touch position.

In addition, if the application has a user interface object structure such as that shown in Table 6, and a matching function such as that performed in the process of step **3608**, then the reader **300** may send X, Y coordinates of a touch position to the application. As a result, the CPU **805** executes the same matching function in order to read data associated with the user interface object and provides the card user, a service (e.g. a game) identified by a service identifier **1106** associated with the read data.

Therefore, if a card user uses the reader **300** as a mouse (i.e., the reader **300** is in mouse mode) by moving his or her finger on the touch panel **308**, then the user can select one of the set top box **601** services on a set top box menu displayed on the display of the television **616**. Also, if the card user uses the reader **300** with an inserted card **100** and selects some indicia **114** (i.e., the reader **300** is in user interface card reader mode), then the user can receive a service (e.g. a game) from the set top box **601**.

7.7 Process Coordinates Process

FIG. **37** is a flow diagram showing a process coordinates process for matching a pair of coordinates with a user interface object stored on the card **100**, as performed at step **3608**. The process of step **3608** is preferably implemented as software resident in memory **1046** and being executed by the CPU **1045**. The process begins at step **3701**, where the memory of the card **100** is searched by the CPU **1045** to determine a user interface object, and associated data, matching the coordinates received from the reader **300**. At the next step **3703**, if a user interface card object was found in memory **1046**, by matching the coordinates received from the reader **300**, then the process of step **3608** proceeds to step **3705**. Otherwise, the process proceeds to step **3711**. At step **3705**, the CPU **1045** reads the data associated with the matched user interface object from the memory of the card **100**. The process of step **3608** continues at the next step **3707** where the CPU **1045** executes a process object data process as performed at step **3317**. The process object data process will be described in detail below with reference to FIG. **38**. At the next step **3709**, if the CPU **1045** detects a RELEASE event, then the process proceeds to step **3713**. Otherwise, the process of step **3608** concludes. At step **3713**, temporary settings counters (as described above to control temporary protocols and modifier flags) configured within the memory **1047** are decremented. Then at the step **3715**, the CPU **1045** reverts those settings having expired counters to the values previously stored for these settings and the process of step **3608** concludes.

At step **3711** a transmit message header process is executed by the CPU **1045**. The transmit message header process transmits a reader application message header and any other information that is not read from the card **100**, for a current message. The transmit message header process will be described below with reference to FIG. **9**. The process of step **3608** concludes after the next step **3717** where a message checksum is transmitted by the reader **300**.

7.8 Process Object Data Process

FIG. **38** is a flow diagram showing a process object data process for processing data associated with a user interface object stored in the memory of the card **100**, as performed

at steps **3317** and **3707**. If the extended data flag (see Table 4) of the object, detected by the CPU **1045** at step **3316** or **3703** (i.e., the matched object) is set then the CPU **1045** processes the extended data structure of the object at the beginning of the data associated with the object, before the reader **300** reverts to standard data format mode, by clearing the extended data flag, upon reaching a tag of zero.

The process of step **3317** is preferably implemented as software resident in memory **1046** and being executed by the CPU **1045**. The process begins at step **3801**, where the CPU **1045** determines whether there are any more bytes of the user interface object, detected by the CPU **1045** at step **3316**, to process. If their are more bytes to process, at step **3801**, then the process of step **3317** proceeds to step **3803**. Otherwise, the process proceeds directly to step **3825** where a transmit message checksum process is executed by the CPU **1045** and the process concludes. The transmit message checksum process is executed by the CPU **1045** in order to transmit the checksum following a message body and will be described in detail below with reference to FIG. **48**. At step **3803**, if the extended data format flag (see Table 4) of the matched object is set, then the process of step **3317** proceeds to step **3805**. Otherwise, the process proceeds to step **3821**. At step **3805** the CPU **1045** reads the next data byte as a tag, as described above with reference to FIGS. **23**(*a*) and **23**(*b*). If the tag is equal to zero, then the process of step **3317** proceeds to step **3811**. Otherwise, the process proceeds to step **3809** where the next data byte is read by the CPU **1045** and is interpreted by the processor **705** as the length of the sub-object data. At the next step **3813**, if a RELEASE event is detected by the CPU **1045** then the process of step **3317** proceeds to step **3817** where the remaining sub-object data bytes associated with the matched object are skipped and the process returns to step **3801**. Otherwise, the process proceeds to step **3815** where a process sub-object data process is executed by the CPU **1045**. The process sub-object data process will be described in more detail with reference to FIG. **39**. After step **3815** the process of step **3317** returns to step **3801**. At step **3811**, the extended data flag of the matched object is cleared and the process of step **3317** returns to step **3801**.

At step **3821**, the CPU **1045** reads the next data byte associated with the matched object. At the next step **3823**, a transmit message character process is executed by the CPU **1045** and the process of step **3317** returns to step **3801**. The transmit message character process is called by the CPU **1045** to transmit a single character forming part of a current message body and will be described in detail below with reference to FIG. **47**.

7.9 Process Sub-Object Data Process

FIG. **39** is a flow diagram showing a process sub-object data process for checking the tag associated with a current sub-object of a user interface object, as performed at steps **3815**. Tag values are represented in hexadecimal format. The process of step **3815** updates the state of the reader **300** according to the retrieved sub-object value. The process of step **3815** is preferably implemented as software resident in memory **1046** and is executed by the CPU **1045**. The process begins at step **3901**, where if the most significant bit of the tag of the next data byte, read by the CPU **1045** at step **3805**, is equal to one, indicating that a non-global change is to be effected in the reader **300**, then the process of step **3815** proceeds to step **3902**. Otherwise, the process of step **3815** proceeds to step **3917**. At step **3902**, if the value of the tag of the next data byte, read by the CPU **1045** at step **3805**, is equal to one, indicating that the data byte comprises part of an update reader identifier sub-object, then the process of step **3815** proceeds to step **3903**. At step **3903**, an update reader identifier process is executed by the CPU **1045** and the process then proceeds to step **3925**. Otherwise, the process proceeds to step **3905**. As described above, with reference to FIGS. **23**(*a*) and (*b*), the value of a tag is indicated by the bits labeled X in the tags **2301** and **2302** and the value of the tags indicates the type of sub-object associated with the tag. The update reader identifier process processes the data contained in an update reader identifier sub-object and will be described in more detail below with reference to FIG. **41**.

At step **3905**, if the value of the tag is in the range of [4, 8), indicating that the next sub-object is an update global protocol pointer sub-object, then the process of step **3815** proceeds to step **3907** where an update global protocol pointer process is executed by the CPU **1045**. Otherwise, the process proceeds to step **3909**. The update global protocol pointer process processes the data contained in an update global protocol pointer sub-object and will be described in more detail below with reference to FIG. **40**. Separate global protocol pointers are maintained for the user interface card, remote-control, keyboard and mouse modes of the reader **300**, as described above with reference to Tables 9 and 10. The value of the least significant two bits of the tag determines which mode the reader **300** is to be set to.

At step **3909**, if the value of the tag is equal to eight, indicating that the next sub-object is a protocol module sub-object, then the process of step **3815** proceeds to step **3911** where a download new protocol module process is executed by the CPU **1045**. Otherwise, the process proceeds to step **3913**. The download new protocol module process processes data in a protocol module sub-object and will be described in more detail below with reference to FIG. **42**. If a protocol already in memory **1046** exists with the same identifier as the protocol to be loaded, then the existing protocol is initially removed.

At step **3913**, if the value of the tag is equal to nine, indicating that the next sub-object is a delete protocol module sub-object, then the process of step **3815** proceeds to step **3915** where a delete protocol modules process is executed by the CPU **1045**. Otherwise, the process proceeds to step **3925**. The delete protocol modules process processes data contained in a delete protocol module sub-object and will be described in more detail below with reference to FIG. **43**. The success of each module deletion requested within the sub-object is indicated by a BEEP sounded by the reader **300**.

At step **3917**, if the value of the type field of the tag is equal to one, indicating that the next sub-object is a temporary protocol sub-object, then the process of step **3815** proceeds to step **3919** where a set temporary protocol process is executed by the CPU **1045**. Otherwise, the process proceeds to step **3921**. The set temporary protocol process will be described in more detail below with reference to FIG. **45**.

At step **3921**, if the value of the type field of the tag is equal to one, indicating that the next sub-object is a set modifier flags sub-object, then the process of step **3815** proceeds to step **3923** where a set modifier flags process is executed by the CPU **1045**. Otherwise, the process proceeds to step **3925**. The set modifier flags process is configured to process the data contained in a set modifier flags sub-object and will be described in more detail below with reference to FIG. **46**.

At step **3925**, the CPU **1045** skips the remaining sub-object data bytes of the sub-object detected by the CPU **1045** at step **3316** and the process of step **3815** concludes.

7.10 Update Global Protocol Pointer Process

Separate global protocol pointers, configured within memory **1046** of the reader **300**, are maintained for the user interface card, remote-control, keyboard and mouse modes of the reader **300**. The value of the least significant two bits of the tag for the current sub-object determines which mode the reader **300** is to be set to.

FIG. **40** is a flow diagram showing the update global protocol pointer process, as performed at step **3907**. The process of step **3907** is preferably implemented as software resident in memory **1046** and being executed by the CPU **1045**. The process begins at step **4001**, where if a protocol module is found within the protocol module list in memory **1046**, having a property structure which contains a protocol identifier equal to the data byte, then the process of step **3907** proceeds to step **4003**. The value of the first byte of the sub-object identifies the global protocol being used by the system **600**. At the next step **4003**, the global protocol pointer configured within memory **1047** is set according to the desired device mode (i.e., user interface card reader, mouse, keyboard or remote control), to the protocol pointer identified by the first byte. The process of step **3907** concludes at the next step **4005** where a BEEP is sounded by the reader **300** indicating the success of the process.

If a matching property structure was not found at step **4001**, then the process of step **3907** proceeds to step **4007** where a BOOP is sounded by the reader **300** indicating such.

7.11 Update Reader Identifier Process

FIG. **41** is a flow diagram showing an update reader identifier process for processing the data contained in an update reader identifier sub-object, as performed at steps **3903**. The process is preferably implemented as software resident in memory **1047**. The process of step **3903** is executed by the CPU **1045** and begins at step **4101**, where the reader identifier configured within memory **1046** is set to be value of the first and second bytes of the sub-object data field of the object. The process of step **3903** concludes at step **4103** where a BEEP is sounded by the reader **300**.

7.12 Download New Protocol Module Process

FIG. **42** is a per flow diagram showing the download new protocol module process, as performed at step **3911**. As described above, the download new protocol module process processes data in a protocol module sub-object and will be described in more detail below with reference to FIG. **42**. If a protocol already exists in memory **1046** with the same identifier as the protocol to be loaded, then the existing protocol is initially removed from memory **1046**. The process of step **3911** is implemented as software resident in memory **1046** and is executed by the CPU **1045**. The process begins at step **4201**, where if the value of the first data byte of the current sub-object is equal to one then the process proceeds to step **4203**. Otherwise, the process proceeds to step **4213** where a BOOP is sounded by the reader **300** and the process concludes. At step **4203**, if a protocol module already exists in memory **1046** with the same identifier as the protocol to be loaded into memory **1046** then the process of step **3911** proceeds to step **4205** where the conflicting protocol module is deleted from memory **1046**. As described above with reference to FIG. **27**, the identifier for a protocol is stored in the protocol properties portion **2701** of the associated protocol module **2700**. The conflicting protocol is deleted from memory **1046** using a delete protocol module process, which will be described below with reference to FIG. **44**. The delete protocol module process deletes a single protocol module from memory **1046**. At the next step **4207**, if there is enough unused space in memory **1046** at the end of a protocol module chain containing the deleted protocol module stored within the memory **1046**, then the process of step **3911** proceeds to step **4209**. Otherwise, the process proceeds to step **4213** where a BOOP is sounded by the reader **300**. At step **4209**, object data associated with the current sub-object is written to the beginning of the free area of memory **1046**. The process of step **3911** concludes at step **4211** where a BEEP is sounded by the reader **300**.

7.13 Delete Protocol Modules Process

FIG. **43** is a flow diagram showing the delete protocol modules process, as performed at step **3915**. The process of step **3915** is preferably implemented as software resident in memory **1046** and being executed by the CPU **1045**. The process begins at step **4301**, where if there are any bytes of the current sub-object remaining to be processed then the process proceeds to step **4302**. Otherwise, the process of step **3915** concludes. At step **4302**, if a protocol module already exists in memory **1046** with the same identifier as the protocol to be deleted from memory **1046** then the process of step **3915** proceeds to step **4303**. Otherwise, the process proceeds to step **4305** where a BOOP is sounded by the reader **300**. As described above with reference to FIG. **27**, the identifier for a protocol is stored in the protocol properties portion **2701** of the associated protocol module **2700**. At step **4303**, the protocol module is deleted from memory **1046** using the delete protocol module process, which will described in detail below with reference to FIG. **44**. As described above, the delete protocol module process deletes a single protocol module from memory **1046**. The process of step **3915** concludes at the next step **4307** where a BEEP is sounded by the reader **300**. If there is no protocol module existing in memory **1046** with the same identifier as the protocol to be loaded into memory **1046**, at step **4302**, then the process proceeds to step **4305** where a BOOP is sounded by the reader **300** concludes.

7.14 Delete Protocol Module Process

FIG. **44** is a flow diagram showing the delete protocol module process, as performed at steps **4205** and **4303**. The delete protocol module process erases the flash memory **1046** containing a protocol module to be erased and also compacts the associated protocol module list **2800**, stored in memory **1046**, each time a protocol module is erased. The process of step **4205** is executed by the CPU **1045** and begins at step **4401**, where all memory **1046** occupied by the protocol module to be erased is cleared by the CPU **1045**. At the next step **4403**, if there are one or more protocol modules after the erased protocol module in the associated protocol module list **2800**, then the process of step **4205** and **4303** proceeds to step **4405**. Otherwise, the process concludes. At step **4405** all subsequent protocol modules of the protocol module list **2800** are moved forward in memory **1046** to begin at the newly vacated area of the memory **1046**.

7.15 Set Temporary Protocol Process

FIG. **45** is a flow diagram showing the set temporary protocol module process, as performed at step **3919**. The set temporary protocol module process is executed by the CPU **1045** and begins at step **4501**, where if the tag of the current temporary protocol sub-object indicates a card specific change, then the process proceeds to step **4501**. Otherwise, the process proceeds to step **4523**, where the state of a current protocol pointer, configured within memory **1047**,

and parameters for the current protocol are saved in memory **1047**. At the next step **4525**, a temporary protocol counter is set to the value of the least significant bit of the tag for the temporary protocol sub-object, plus one, and the process proceeds to step **4501**.

At step **4501**, if the value of the first data byte of the temporary protocol sub-object is equal to zero, then the process proceeds to step **4505**. Otherwise, the process proceeds to step **4503**. At step **4505**, a temporary protocol pointer configured within memory **1047** is set to the value of a global protocol pointer according to a specific device mode (i.e., as indicated by the second byte of the temporary protocol sub-object) and the process of step **3919** proceeds to step **4507**.

At step **4503**, if there is a protocol module existing in memory **1046** having the same identifier as the protocol module for the protocol specified by the temporary protocol sub-object, then the process of step **3919** proceeds to step **4515**. Otherwise, the process proceeds to step **4517**. At step **4515**, the temporary protocol pointer configured within memory **1047** is set to the address of the existing protocol module stored in memory **1046** and the process proceeds to step **4507**.

At step **4507**, protocol parameter flags (see Table 19) configured within memory **1046** are set according to the second data byte of the temporary protocol sub-object and the process proceeds to step **4509**. At step **4509**, if the tag of the temporary protocol sub-object indicates that the CPU **1045** is to execute a toggle between the temporary proctocol and the current protocol, then the process proceeds to step **4511**. Otherwise, the process proceeds to step **4513**.

At step **4511**, if the parameter values for the temporary protocol are equal to the parameter values for the current protocol, as were saved by the CPU **1045** at step **4523**, then the process of step **3919** proceeds to step **4517**. Otherwise the process proceeds to step **4515** where the CPU **1045** saves the parameter values for the current protocol in memory **1047**. At step **4517**, the CPU **1045** restores the parameter values that were saved at step **4523**.

The process of step **3919** continues at the next step **4513**, where the current protocol pointer configured in memory **1046** is set to the point to the protocol module corresponding to the temporary protocol, and the parameter flags are set to the values for the temporary protocol module.

At step **4517** the current protocol pointer configured within memory **1047** is set to the global protocol pointer configured within memory **1046**. The process of step **3919** concludes at the next step **4519** where a BOOP is sounded by the reader **300**.

7.16 Set Modifier Flags Process

FIG. **46** is a flow diagram showing the set modifier flags process, as performed at step **3923**. As described above, the set modifier flags process processes the data contained in a set modifier flags sub-object. See Table 10 above for a description of the set modifier flags sub-object. The set modifier flags process is executed by the CPU **1045** and begins at step **4601**, where the CPU **1045** determines whether the tag of the current sub-object indicates a card specific change. If so, the process of step **3923** proceeds to step **4604**. Otherwise, the process proceeds to step **4602** where the current state of all modifier flags is saved in memory **1047**. At the next step **4603**, a modifier flag counter configured within memory **1046** is set to the value of the lowest significant bit of the tag of the current sub-object, plus one. The process of step **3923** continues at the next step **4604**, where the CPU **1045** executes an exclusive OR operation on the first data byte of the current sub-object and the first modifier flags byte configured within memory **1046**. At the next step **4605**, the CPU **1045** executes an exclusive OR operation on the second data byte of the current sub object and the second modifier flags byte configured within memory **1047**. The process of step **3923** then concludes.

7.17 Transmit Message Character Process

FIG. **47** is a flow diagram showing the transmit message character process, as performed at step **3823**. The transmit message character process is preferably implemented as software resident in memory **1046** and being executed by the CPU **1045**, in order for the reader **300** to transmit a single character forming part of a current message body. If the message header **1100** for a current message has not been transmitted by the reader **300** then the message header **1100** is transmitted before the single character. The transmit message character process begins at step **4701**, where if the CPU **1045** determines that a message header **1100** for the current message has not been transmitted then the process of step **3823** proceeds directly to step **4707**. Otherwise, the CPU **1045** clears the message checksum at the next step **4703**. Then at step **4705**, the CPU **1045** executes a transmit message header process. The transmit message header process will described in more detail with reference to FIG. **9** . The process of step **3823** concludes at the next step **4707** where the CPU **1045** executes a transmit single character process. The transmit single character process will be described in further detail below with reference to FIG. **49**

7.18 Transmit Checksum Routine

FIG. **48** is a flow diagram showing the transmit message checksum process, as performed at step **3825**. The transmit message checksum process is preferably implemented as software resident in memory **1046** and being executed by the CPU **1045**, in order for the reader **300** to transmit the checksum following a message body. If the message header **1100** for the current message has not been transmitted by the reader **300** then the message header **1100** is transmitted before the message checksum. The transmit message checksum process begins at step **4801**, where if the CPU **1045** determines that the message header **1100** of the current message has been transmitted by the reader **300** then the process of step **3825** proceeds directly to step **4807**. Otherwise the process proceeds to step **4803** where the message checksum is cleared. At the next step **4805** the transmit message header process of FIG. **9** is executed by the CPU **1045**. Then, at step **4807** the CPU **1045** loads the checksum of the current message into memory **1047**. The process of step **3825** continues at the next step **4809** where the CPU **1045** executes the transmit single character process, which will be described below with reference to FIG. **49**. At the next step **4811**, the checksum loaded into memory **1047** at step **4807** is inverted by the CPU **1045**. The process of step **3825** continues at the next step **4813**, where the transmit single character process is again executed by the CPU **1045**. The process concludes at step **4815** where the CPU **1045** executes a flush transmit buffer process in order to send all of the data present in a transmission buffer configured within memory **1046** before clearing the buffer. The flush transmission buffer process will be described in detail below with reference to FIG. **50**.

7.19 Transmit Single Character Process

FIG. **49** is a flow diagram showing the transmit single character process, as performed at steps **4707**, **4809** and **4813**. The transmit single character process is executed by the CPU **1045** and begins at step **4901**, where a next

character of the current message is appended to the transmission buffer. At the next step **4903**, the character is added to the message checksum by the CPU **1045**. Then at step **4905**, the length of the packet formed by the single character and the message checksum is checked against the output buffer length element of the protocol properties portion **2701** for the current protocol. The process of step **4707** continues at the next step **4907** where if the transmission buffer is full then the process concludes. Otherwise, the process of step **4707** proceeds to step **4909** where a flush transmission buffer process is executed by the CPU **1045**, as at step **4815**.

7.20 Flush Transmit Buffer Process

FIG. **50** is a flow diagram showing the flush transmission buffer process, as performed at steps **4815** and **4909**. The flush transmission buffer process is preferably implemented as software being resident in memory **1046** and being executed by the CPU **1045**. The process begins at step **5001**, where the CPU **1045** waits until a transmission gap timer, configured within the timer interface module **1060**, has expired. Then at step **5003** the CPU **1045** prepares the timer module **1060** of the microcontroller **1044** for transmission using the carrier period for the current protocol as defined by the current protocol module. At the next step **5005**, the CPU **1045** invokes the format function from the protocol module (e.g. the module **2700**) for the current protocol from memory **1046**. If there are any more frames left in the current message at the next step **5007** then the process of step **4815** proceeds to step **5009**. Otherwise, the process proceeds to step **5017**. At step **5009** the CPU **1045** executes a transmit symbol process to transmit a first symbol for a current frame of the current message. The transmit symbol process will be explained in more detail below with reference to FIG. **18**.

The process of step **4815** continues at the next step **5011**, where the parity symbol for the current frame is cleared. At the next step **5011**, if there are no more symbols of the current frame left to be transmitted then the process proceeds to step **5019**. Otherwise the process proceeds to step **5015** where the CPU **1045** executes the transmit symbol process to transmit a next symbol for the current frame. Then at step **5016**, the current symbol is added to the parity symbol for the current frame and the process of step **4815** returns to step **5013**.

At step **5019**, if the CPU **1045** determines that a parity symbol needs to be transmitted for the current frame then the process proceeds to step **5021**. Otherwise, the process proceeds directly to step **5023**. At step **5021**, the transmit symbol process is executed by the CPU **1045** to transmit the parity symbol. Then at step **5023**, the transmit symbol process is executed by the CPU **1045** to transmit the stop symbol of the current frame and the process of step **4815** returns to step **5007**.

At step **5017**, the CPU **1045** configures the gap timer to expire after the protocol transmission gap between frames for the current message, and the process of step **4815** concludes.

7.21 Wait 10 Millisecond Process

FIG. **51** is a flow diagram showing the wait 10 ms process, as performed at step **3109** of the initialization process of FIG. **31**. The wait 10 millisecond process is executed by the CPU **1045** to loop in order to consume processor cycles until 10 milliseconds has elapsed. The process of step **3109** begins at step **5101** where a wait counter configured within memory **1047** is cleared. At the next step **5103** if one minute of user inactivity has elapsed then the process proceeds to step **5105**. Otherwise the process proceeds to step **5107** where the reader **300** enters low-power mode in accordance with an enter low-power mode process which will be described below with reference to FIG. **52**, and the process of step **3109** concludes. The enter low power mode process is executed by the CPU **1045** to prepare the reader **300** and the card **100** to enter low power mode. At step **5105** the wait counter configured within memory **1047** is incremented. If 10 milliseconds of waiting time has not elapsed at the next step **5109** then the process returns to step **5103**. Otherwise, the process of step **3109** concludes.

7.22 Enter Low Power Mode

As well as preparing the reader **300** and the card **100** to enter low power mode process, as described above, this process also controls wait mode timer wake-ups when the card **100** is inserted into the reader **300**. FIG. **52** is a flow diagram showing the enter low power mode process, as performed at step **5107**, of the wait 10 millisecond process of FIG. **51**. The process of step **5107** begins at step **5201** where the CPU **1045** sets up the output ports of the microcontroller **1044** to minimise current consumption during low power mode. The process concludes at the next step where the reader **300** is suspended to stop mode.

7.23 Timer Overflow Interrupt Service Routine

FIG. **53** is a flow diagram showing a timer overflow interrupt service process **5300**, which is executed by the CPU **1045** when an overflow of a 16-bit free-running counter configured within the timer interface counter **1060**, occurs. An initial timer interrupt following any transmission by the reader **300** indicates the expiry of the transmission gap time set by a currently active protocol module for the reader **300**. Subsequent interrupts are triggered at the maximum period supported by the timer interface module **1060** in order to count idle time required before the reader **300** enters low power mode. The timer interface module **1060** generates an interrupt, which vectors to the process **5300**. The timer overflow interrupt service process calculates how long the reader **300** has been idle (i.e., no user input). The process **5300** is preferably implemented as software resident in memory **1046**. The process **5300** begins at step **5301**, where the CPU **1045** increments a counter configured within memory **1047**. At the next step **5303** the process **5300** sets a maximum period for the timer, indicating also that the transmission gap has expired, and the process **5300** concludes.

7.24 Transmit Message Header Process

FIG. **9** is a flow diagram showing the transmit message header process, as performed at steps **3711**, **4705** and **4805**. The transmit message header process is preferably implemented as software resident in memory **1046** and being executed by the CPU **1045**. As described above, the transmit message header process transmits a reader application message header and any other information that is not read from the card **100**, for the current message.

The process of step **3711** begins at step **901**, where the CPU **1045** transmits three constant bytes of the message, which includes a two byte preamble and a one byte protocol version number. At the next **903**, the CPU **1045** transmits the next byte of the current message, which specifies the type of message. The process continues to the next step **905**, where the next two bytes of the current message, representing the identifier for the reader **300**, are transmitted by the CPU **1045**. At the next step **907**, the CPU **1045** transmits eight bytes representing the service identifier and the service specific identifier for the card **100**. Then at step **909**, if the message type is a "MOVE", "PRESS" or "RELEASE" type message then the process proceeds directly to step **911**.

Otherwise, the process proceeds to step **913**.

At the next step **911**, the CPU **1045** transmits the next two bytes of the current message, representing the coordinates of the move, press or release event. Then at step **913**, if the message type is an "INSERT", "PRESS" or "RELEASE" type message then the process proceeds to step **915**. Otherwise the process of step **3711** concludes. At step **915**, the CPU **1045** transmits the final two bytes of the current message header, indicating the length of data to follow in the variable length part of the message and the process concludes.

7.25 Transmit Symbol Process

FIG. **18** is a flow diagram showing the transmit symbol process, as performed at steps **5009**, **5015** and **5021**. The transmit symbol process is preferably implemented as software resident in memory **1046** and being executed by the CPU **1045**. As described above, the transmit symbol process transmits a symbol of a current frame for the current message.

The process of step **5009** begins at step **1801**, where the CPU **1045** loads a chip pattern (see Table 19) for a next symbol according to the symbol definition for the next symbol. Then at step **1803**, if there are no more chips left to be processed for the current symbol, then the process of step **5009** concludes. Otherwise, the process proceeds to step **1805** where the CPU **1045** sets the output pin for the next chip according to the protocol properties for the current protocol. Then at step **1807**, the CPU **1045** waits for a period of time corresponding to the chip length (see table 19) according to the protocol properties of the current protocol. After step **1807**, the process of step **5009** returns to step **1803**.

The aforementioned methods comprise a particular control flow. There are many other variants of the preferred methods, which use different control flows without departing the spirit or scope of the invention. Furthermore one or more of the sub-steps of the preferred method(s) may be executed in parallel rather sequential.

8.0 FURTHER EXAMPLES

The arrangements described above will be further described by way of several examples with particular reference to the system **600**B of FIG. **6**(*b*).

8.1 Multiple Set-top Boxes

Example 1

A typical cable television operator has many subscribers using set-top boxes (e.g. the set top box **601**). The set top boxes are typically supplied to subscribers from different manufacturers and each set top box typically employs a different set of communication protocols to receive keyboard, mouse and remote control input. In order to deploy readers similar to the reader **300**, which will work with these varying set top boxes, without conflicting with other devices (e.g., VCRs, remote controlled doors, air conditioners etc), different infrared protocols must be used and installed as part of the firmware on the readers.

Most cable television operators would prefer to have a single model of reader, such as the reader **300**, with the same firmware stored thereon. Such a reader **300** can be transported to the subscriber, on subscription to the network, together with a card **100**F, as shown in FIG. **54**. The card **100**F is configured for selecting a transmission protocol to be used by the reader **300** for a particular set top box **601** as owned by the subscriber. For the card **100**F, user interface elements **5414** printed on the card **100**F are in the form of buttons, which are labelled with model numbers of set top boxes (e.g. L-**620**, U-**300**, etc).

Each of the user interface elements **5414** has an associated user interface object, stored in a memory (not shown) of the card **100**F, containing protocol configuration data. The protocol configuration data specifies which protocols a particular set top box uses for each of the four device modes (i.e., keyboard, mouse, user interface card reader and remote control) of the reader. The memory of the card **100**F also has a number of protocol modules (e.g. the module **2700**), defining the specified protocols (i.e., L-**620**, L-**630**, U-**300** etc) stored therein.

The reader **300** has firmware stored in memory **1046** such that when the card **100**F is inserted into the reader **300**, the user can select one of the user interface elements **5414** according to which model of set-top box **601** the user owns. In response to such a selection, the reader **300** will be automatically configured to operate using the same protocol(s) as the particular set-top box.

FIG. **20** is a flow diagram showing a process **2000** for configuring a reader **300** to communicate with a set top box **601**, in one implementation. The process begins at step **2001**, where the model number of the set top box is determined. The model number can be determined according to an identifier label printed on the back of the set top box **601**. Instructions on how to determine the, model number can be printed on the card **100**F, as shown in FIG. **54**. At the next step **2003**, one of the user interface elements **5414** can be selected depending on which model the set top box **601** is determined to be. If, for example, the value of the identifier is "Vx-1001", then card **100**F can be inserted into the reader **300** and the user interface element **5415** labelled Vx-1001 can be selected. Then at step **2005**, the reader **300** compares the coordinates of the selected user interface element (i.e., user interface element **5415**) against data stored in the memory of the card **100**F, according to the process **3608**, and determines that the coordinates correspond to a user interface object containing protocol configuration data. In this example, the protocol configuration data specifies that for a Vx-1001 model reader, user interface card messages should be transmitted by the reader **300** to the set top box **601** using the RC-MM protocol (as known to those in the relevant art), remote control messages should be transmitted using the RC5 protocol (as known to those in the relevant art), and that keyboard and mouse messages should be transmitted using a proprietary protocol created by the manufacturer of the Vx-1001 model set top box **601**.

The user interface object stored in a memory of the card **100**F and being associated with the user interface element **5415** thus contains the following sub-objects:

(i) Download Protocol Module (RC-MM);
(ii) Download Protocol Module (RC5);
(iii) Download Protocol Module (Vx-1001);
(iv) Set Global Reader Application Protocol (RC-MM);
(v) Set Global Keyboard Protocol (Vx-1001);
(vi) Set Global Mouse Protocol (Vx-1001); and
(vii) Set Global Remote Control Protocol (RC5).

The process **2000** continues at the next step **2007**, where the reader **300** down-loads protocol modules (e.g., **2700**) defining the specified protocols (i.e., RC-MM, RC5 and the Vx1001 proprietary protocol) from the memory of the card **100**F and stores the specified protocols in memory **1046**. The specified protocols are downloaded by the reader **300** in accordance with the process **3911**. At the next step **2009**, the CPU **1045** of the reader **300** executes the firmware stored on

the reader **300** such that the reader **300** is configured to use the specified protocols by default when the reader **300** is sending messages of the designated types by setting each global protocol pointer to refer to one of the newly down-loaded protocols.

8.2 Multiple Set-Top Boxes

Example 2

FIG. **29** shows an example of another card **100**E, similar to the card **100**F described above. However, the card **100**E is configured for selecting a transmission protocol to be used by the reader **300** in the system **600** and in particular in the system **600**B. User interface elements **2914** of the card **100**E are in the form of a "SET GLOBAL" button **2901**, a "LOAD" button **2903**, a "TEST" button **2905** and a "DELETE" button **2907**, printed on a front face **2916** of the card **100**E, for each of four particular protocols (i.e., RC5, Control-S, NEC and R-MAP as known to those in the relevant art) of a reader **300** or system **600**. The labels on each of the user interface elements suggest the function of each of the elements **114** and will not be described in detail.

In this example, similar to Example 1 above, a user is provided with the card **100**E of FIG. **29**. The card **100**E includes protocol modules for each of a set of protocols (i.e., RC5, Control-S, NEC and R-MAP as known to those in the relevant art) stored in a memory of the card **100**E. The user is then instructed by the supplier of the card **100**E and the associated reader **300**, to load and test each of the protocols listed on the card **100**E until a positive response is observed on a target set top box.

FIG. **60** is a flow diagram showing a process **6000** for determining a communication protocol for the reader **300**, in one implementation. The process begins at step **2101**, where with the card **100**E inserted in the reader **300**, a first protocol module corresponding to a first protocol (e.g., 'RC5') is down-loaded by the reader **300** into memory **1047** (i.e., RAM), upon selection of one of the user interface elements **2914** (i.e., element **2903** in the case of protocol RC5). The first protocol is down-loaded by the reader **300** in accordance with the process **3911**.

At the next step **2103**, the CPU **1045** of the reader **300** transmits a message to the set top box **601** upon selection of one of the user interface elements labelled as 'test' (i.e. element **2905** in the case of protocol RC5). Then at step **2105**, if a positive response is observed in response to the transmission then the process **6000** proceeds to step **2107**. Otherwise, the process **6000** returns to step **2101** where a next protocol module (e.g. Control-S) is down-loaded by the reader **300**. The first protocol module (i.e., RC5) can be deleted from the memory **1046** according to the process **4205** if there is not enough available space in memory **1046** to accept the next protocol module. The positive response can take the form, for example, of an indicator LED (not shown) on the set top box flashing or a function being performed by the audio visual output device **616** such as a menu being displayed.

The process **6000** concludes at the next step **2107**, where the reader **300** is configured to use the protocol producing the positive response (i.e., RC5), by default, as the global protocol for the system **600**B, upon a user interface element labelled "SETGLOBAL" (i.e., element **2901** in the case of the protocol RC5) being selected. In this instance, and a global protocol pointer configured within memory **1046** is set to point to the RC5 protocol module in memory **1046**.

8.3 Set-Top Box Upgrade

Example 3

In another example, an operator wishes to upgrade the set top boxes owned by subscribers, some of whom already own a reader **300**, to a new type of set-top box (e.g. a new and improved Vx-2000 series set top box). A technician can be assigned to each of the subscriber's homes or offices to install the new set top boxes. Unfortunately, the new type of set top boxes use a different set of infrared communication protocols to the current set top boxes. Preferably, those subscribers who own a reader **300** would not be required to be issued with a different reader capable of communicating with the new set top box. Therefore, the technician carries a special card **100**G, as seen in FIG. **55**, which is configured to enable reconfiguration of the reader **300** to use the different set of infrared communications protocols as soon as the card **100**G is inserted in the reader **300**.

The card **100**G is similar to the cards **100**E and **100**F, described above, and is configured for selecting the transmission protocol to be used by the reader **300**. However, in the case of the card **100**G, only the new set of protocols specified by the operator are stored in a memory of the card **100**G. The new set of protocols are stored using a card data object, which contains the following sub-objects:

(i) Download Protocol Module (Vx-2000);
(ii) Set Global Reader Application Protocol (Vx-2000);
(iii) Set Global Keyboard Protocol (Vx-2000);
(iv) Set Global Mouse Protocol (Vx-2000); and
(v) Set Global Remote Control Protocol (Vx-2000).

The card **100**G also includes user interface elements **5514** in the form of buttons **5501**, **5503**, **5505** and **5507**, which are labeled 'Standard', Remote Ctrl', 'Keyboard' and 'Mouse' according to the device modes of the reader **300**. Each of the user interface elements **5514** of the card **100**G preferably has an associated Change Non-Global Protocol sub-object, as described above, which is effective for only one user interface element **5514** selection of the associated user interface element. The Change Non-Global Protocol sub-object contains the Vx-2000 protocol identifier followed by flags to indicate the device mode being by the associated user interface element **5514**. An Output Data sub-object would contain data which will be recognised by the the set-top box **601** as a particular known command. Additionally, the user interface element **5507** marked as Mouse requires that a Move flag associated with the element **5507** is set, in order to allow movement messages to be sent.

Once the reader **300** has been configured to use the different set of infrared communications protocols, the technician can test the operation of the reader **300** for each of the supported device modes, by selecting the elements **5501** to **5507**. Thus, the card **100**G allows a technician to ensure that the new protocols have been successfully stored in the firmware of the reader **300**.

FIG. **22** is a flow diagram showing a process **2200** for reconfiguring the reader **300** according to a new set of communications protocols. The process begins at step **2201**, where upon insertion of the card **100**G into the reader **300**, protocol modules stored in a memory of the card **100**G, and corresponding to the protocols for the new set top boxes, are down-loaded by the reader **300** into memory **1047** (i.e., RAM). The protocols are down-loaded by the reader **300** in accordance with the process **3911**.

The process **2200** continues at the next step **2203**, where the CPU **1045** of the reader **300** transmits a message to the set top box **601** upon selection of the user interface element **5501** labelled as 'Standard'. The message is transmitted in accordance with a protocol module stored in memory **1046**, which is specified as the user interface card reader mode protocol by the card **100**G. Then at step **2205**, if a positive response is observed in response to the transmission then the process **2200** proceeds to step **2207**. Otherwise, the process **2200** concludes and can be repeated with another card **100** and/or reader **300**.

The process **2200** continues at step **2207**, where the CPU **1045** of the reader **300** transmits a message to the set top box **601** upon selection of the user interface element **5505** labelled as 'Remote Ctrl'. The message is transmitted in accordance with a protocol module stored in memory **1046**, which is specified as the remote control mode protocol by the card **100**G. Then at step **2209**, if a positive response is observed in response to the transmission then the process **2200** proceeds to step **2211**. Otherwise, the process **2200** concludes and can be repeated with another card **100** and/or reader **300**.

The process **2200** continues at step **2211**, where the CPU **1045** of the reader **300** transmits a message to the set top box **601** upon selection of the user interface element **5503** labelled as 'Keyboard'. The message is transmitted in accordance with a protocol module stored in memory **1046**, which is specified as the keyboard protocol by the card **100**G. Then at step **2213**, if a positive response is observed in response to the transmission then the process **2200** proceeds to step **2215**. Otherwise, the process **2200** concludes and can be repeated with another card **100** and/or reader **300**.

The process **2200** continues at step **2215**, where the CPU **1045** of the reader **300** transmits a message to the set top box **601** upon selection of the user interface element **5503** labelled as 'Mouse'. The message is transmitted in accordance with a protocol module stored in memory **1046**, which is specified as the mouse protocol by the card **100**G. Then at step **2217**, if a positive response is observed in response to the transmission then the reader **300** can be certified as 'reconfigured OK' by the technician, at the next step **2219**, and the process **2200** concludes. Otherwise, the process **2200** concludes and can be repeated with another card **100** and/or reader **300**.

8.4 Use of Existing Input Methods

Example 4

In another example, the system **600**B including the set-top box **601** may have several possible applications. One of these applications is an e-mail software program, which is designed to accept input from a standard wireless keyboard as known to those in the relevant art. In order to accept user interface card specific input from the reader **300**, such an e-mail application would need to be modified, which would require the application to go through the normal process of design, implementation and testing. However, the reader **300** is capable of sending existing keyboard codes already supported by the set top box **601**, using a card such as the card **100**H as shown in FIG. **56**, and can circumvent such a design, implementation and testing process.

The card **100**H is configured for sending keyboard codes to the set top box **601**. A card data object stored in a memory of the card **100**H contains a card-specific Change Non-Global Protocol sub-object, which indicates that a default protocol is to be used in keyboard mode. The card **100**H includes user interface elements **5614**, which are labeled with alphabetic characters, numbers and functions emulating a typical alpha/numeric keyboard. Each of the user interface elements **5614** of the card **100**H includes one or more user interface objects stored in a memory of the card **100**H. Each of the user interface objects stored on the card **100**H includes data corresponding to an existing keyboard code. For example, the user interface element **5601** of the card **100**H has a user interface object stored in the memory of the card **100**H. The user interface object includes the coordinates of the user interface element **5601** and a generic code representing the letter 'a'. A code representing the letter 'a' can be transmitted by the reader **300** to the set top box **601** if the user interface element **5601** is selected by a user. As another example, the card **100**H can include a user interface element **5603**, labeled as 'shift'. A code representing a shift function can be transmitted by the reader **300** to the set top box **601**, upon the user interface element **5603** being selected by a user, in order to shift a cursor (not shown) on the screen of the television **616**, for example. Similarly, the other user interface elements **5614** have associated user interface element objects, stored in memory of the card **100**H and can contain a communications code (e.g. ASCII) for the letters or symbols printed on the user interface element.

In this example, if a protocol currently defined as the global keyboard protocol for the system **600**B, specifies non-generic key codes for one or more user interface elements **5614**, then a mapping table can be defined within the protocol module for the particular global keyboard protocol. Such a mapping table can be used by the protocol module to map from a generic code to a protocol-specific code corresponding to the global keyboard protocol. For example, upon selection of the user interface element **5601**, the CPU **1045** can match the generic code representing the letter 'a', using the mapping table, to determine a correct code corresponding to the particular global keyboard protocol. The protocol-specific key code, representing the letter 'a' can then be transmitted in place of the generic code.

Using a mapping table described above, a generic keyboard card, such as the card **100**H, can be used with many different keyboard protocols, even though many of these protocols may use different values to represent the same key (e.g. the letter 'a' user interface element **5601**).

8.5 A Combined Television and Set Top Box/Video Cassette Recorder (VCR) Controller

Set top boxes and VCRs are typically sold independently of an associated television (e.g. the audio visual output device **616**) that the set top box and VCR are used in conjunction with. As described in the Background section of this specification, set top boxes, VCRs and TVs are typically sold with individual remote control devices. A typical session using a set top box or VCR would require use of each of these remote control devices.

The following sequence shows a typical session for using a TV and VCR:

(i) TV: Switch on;

(ii) TV: Switch to VCR mode;

(iii) VCR: Select channel to record;

(iv) VCR: Rewind tape;

(v) VCR: Begin recording;

(vi) TV: Switch to another channel while VCR is recording;

(vii) TV: Switch to VCR mode when show being recorded is finished;

(viii) VCR: Stop tape; and

(ix) TV: Switch off.

Each of the above functions (i) to (ix) requires a user to make a selection on the remote control device for the TV or the VCR, which may require the user to continually juggle such remote control devices to make the selections.

FIG. **57** shows a card **1001** configured for supporting the most frequently used commands used by both a TV and a VCR. The card **1001** is similar to the cards described above and includes user interface elements **5714**, which are labeled with alphabetic characters, numbers and symbols emulating the keys of a typical TV and VCR remote control device. Each of the user interface elements **5714** of the card **100**I includes a user interface object stored in a memory of the card **1001**. Each of the user interface objects stored on the card **1001** includes data corresponding to an existing code representing the alphabetic characters, numbers and functions of a typical VCR and TV. Once a reader **300** has been configured to use the protocols of the TV and VCR, for example, using the card **100**E described above, the card **1001** can be used with the reader **300** to prevent the need for switching conventional remote control devices constantly to perform these and similar tasks.

Certain keys, such as the number keys **5715**, may be recognised in different ways by both a TV and a VCR. In order to enable such keys **5715** to be used easily for either appliance, a user interface element **5716** labeled as "TV/VCR" can be configured to toggle the default protocol for the reader **300** between the protocol used by the particular TV and VCR. Such toggling can be implemented by storing a Change Non-Global Protocol sub-object on the card **100**H and associating the sub-object with the user interface element **5716**. The change non-global protocol sub-object can be configured to toggle the card specific protocol of the card **100**H.

In contrast, the user interface elements of the card **100**H which are configured as appliance specific keys (e.g. the user interface elements **5717** configured as volume keys) can be configured to always use the protocol of the television. The elements **5717** can be associated with a Change Non-Global Protocol sub-object stored on the card **100**H, where the sub-object is configured with 'one button only' effectiveness.

8.6 Multi-Player Gaming

In a multi-player gaming example, two or more card readers (not shown) similar to the reader **300** can be used simultaneously. Each reader must be able to uniquely identify itself to a computer (e.g., the computer **700**) of a system such as the system **600**A so that no transmission interference occurs between the readers whilst playing a game on the computer **700**. In this example, the user of each reader is able to select their own identifier by choosing a color.

FIG. **19** shows a card **100**J which is configured to play a popular computer/arcade game called 'Tetris'. The card **100**J includes user interface elements **1914**. Five of the user interface elements (e.g. the user interface element **1903**) are labeled with symbols representing functions performed during the game (e.g. rotating a graphical object clockwise in the case of the element **1903**). Further, four of the user interface elements (e.g. the element **1901**) are labeled with colors. Each of the color user interface elements have associated user interface element objects stored on the card **100**J including data representing one of the colors blue, red, yellow and green. Therefore, a user of the card **100**J can select one of the colors as identifying the particular user. For example, if a user selects the user interface element **1901** using the reader **300**, then the CPU **1045** of the reader **300** matches the coordinates of the element **1901** with a corresponding object stored on the card **100**J. In this example, the corresponding object includes a Change User Identifier sub-object which contains a value corresponding to the colour blue. The value for the colour blue can be subsequently used as the reader identifier included in the headers (e.g. the header **1100**) of all outgoing reader application protocol messages. Such an identifer can also be used within designated areas of lower-level packets sent by a protocol module. For each subsequent transmission of a message from the reader **300** to the computer **700**, the data corresponding to the matched object and representing the color blue, is included in a sub-object transmitted with the message. The processor **705** of the computer **601** reads the transmitted sub-object and recognizes the message as originating from the card **100**J. Any function data also transmitted with the message is read by the processor **1005** and a corresponding function can result in the Tetris game application executing on the computer **700**, performing a function for the particular user.

The foregoing describes only some embodiments of the present invention, and modifications and/or changes can be made thereto without departing from the scope and spirit of the invention, the embodiments being illustrative and not restrictive. For example, the user interface elements **114**, **154** can be positioned otherwise than on the smart card **100**. The user interface elements **114**, **154** may, for example, be displayed on a display device (e.g. **616**). Further, the embodiments described above, and in particular the cards **100** of the example section, have largely been described with reference to memory cards such as the card **100**A. However, a person skilled in the relevant art would appreciate that the cards **100** (including the cards **100**F, **100**G, **100**H, **100**I and **100**J) can be implemented using a CPU card similar to the CPU card **100**B of FIG. **2**(*b*). User identifiers can represent any features that distinguish one user from another, such as numbers, colours, characters, teams, vechicles etc.

8.7 Set-Top Box Unable to Process Reader Application Protocol Messages

The system **600**B as described in the example of section 1.7 above, can be modified in order to avoid sending reader application protocol messages (e.g. INSERT, REMOVE, BAD CARD, PRESS, RELEASE, MOVE, LOW BATT) when the set-top box **601** is not configured to process such messages. In this instance, each of the user interface elements **1414** of the card **100**C can be mapped to a single keyboard key-stroke, which the CPU **805** of the set-top box **601** can be configured to recognise and interpret as the relevant command corresponding to a particular reader application protocol message. For example, the two-way directional controller user interface elements **1413** can be mapped to "up" and "down" cursor keys available on a keyboard such as the keyboard **704**.

Those user interface elements of the card **100**C that do not have an equivalent keyboard key (and associated code) can be mapped to a key unused in any other context by a particular application, for example, executing on the computer **700**. As an example of such mapping, the "stop" button **1407** can be mapped to the "S" key of the keyboard **704**.

In order to implement the mapping described above, the card **100**C can contain a card data object stored thereon. In this instance, the card data object includes a Change Non-Global Protocol sub-object instructing the reader **300** to use the global keyboard protocol, where the user interface elements would contain generic key codes as defined by a provider of the card **100**C.

The above example shows that, by emulating key codes, the reader **300** can be used with an unrelated set-top box that is not necessarily configured to recognise the reader **300**. Further, such a card **100**C and reader **300** can also be used to control other software applications that normally rely on keyboard input to scroll through menus and make certain selections.

In the context of this specification, the word "comprising" means "including principally but not necessarily solely" or "having" or "including" and not "consisting only of". Variations of the word comprising, such as "comprise" and "comprises" have corresponding meanings.

The claims defining the invention are as follows:

1. A remote control device for communicating transmission data, according to one of a plurality of communications protocols, to at least one of a plurality of predetermined apparatuses, said remote control device being initially configured to communicate said transmission data according to a first one of said communications protocols, said remote control device, comprising:

a receiving means for receiving at least one portion of protocol data and an associated format function, from a second device, said portion of the protocol data describing properties of a second one of said communications protocols for communicating said transmission data with one or more of said plurality of predetermined apparatuses, said second communications protocol being substantially different from said first communications protocol; and

a central processing unit for executing said format function so that the format function transforms at least a portion of said transmission data into a bit stream, using the properties of said second communications protocol defined by the portion of the protocol data, for communication of said bit stream to said at least one apparatus according to said second communications protocol.

2. A remote control device according to claim **1**, wherein said bit stream comprising said transmission data is communicated to said at least one apparatus via a wireless communication link.

3. A remote control device according to claim **1**, wherein said protocol data and said format function are configured for independent use in a further device.

4. A remote control device according to claim **1**, wherein said second communications protocol is utilized by said remote control device for a specified period.

5. A remote control device according to claim **1**, wherein said second communications protocol is utilized by said remote control device until further protocol data and a format function associated with said further protocol data is selected by said central processing device.

6. A remote control device according to claim **1**, wherein said first and second communications protocols are infrared communication protocols.

7. A remote control device according to claim **1**, wherein said remote control device is hard wired to one of said plurality of predetermined apparatuses.

8. A remote control device according to claim **1**, wherein firmware of said remote control device accesses said portion of the protocol data and cooperates with said format function to communicate said bit stream comprising said transmission data.

9. A remote control device according to claim **8**, wherein said firmware of said remote control device is configured according to one of a plurality of software architectures depending on a particular application of said device.

10. A remote control device according to claim **1**, wherein said format function corresponds to one of four device modes.

11. A remote control device according to claim **10**, wherein one of the four device modes is a remote control mode.

12. A remote control device according to claim **10**, wherein one of the four device modes is a keyboard mode.

13. A remote control device according to claim **10**, wherein one of the four device modes is a mouse mode.

14. A remote control device according to claim **10**, wherein one of the four device modes is a user interface card reader mode.

15. A remote control device according to claim **1**, wherein said second device is a control card, said control card comprising a memory with at least said portion of the protocol data and/or said format function stored therein.

16. A remote control device according to claim **15**, further comprising a substantially transparent touch sensitive membrane arranged to overlay said card when said card is inserted into said remote control device.

17. A remote control device according to claim **16**, wherein said central processing unit is configured for accepting specific data related to a selection of at least one of said indicia using said membrane.

18. A remote control device according to claim **15**, wherein said control card has indicia formed thereon and is configured for insertion into said remote control device.

19. A remote control device according to claim **18**, wherein said indicia of said interface card forms a keyboard.

20. A remote control device according to claim **18**, wherein said remote control device further comprises an array stored thereon, said array being configured to map communication codes associated with one or more of said indicia to one or more of said protocols.

21. A method of communicating transmission data, according to one of a plurality of communications protocols, from a remote control device to at least one of a plurality of predetermined apparatuses, said remote control device being initially configured to communicate said transmission data according to a first one of said communications protocols, said method comprising the steps of:

receiving at least one portion of protocol data and an associated format function from a second device, said portion of the protocol data describing properties of a second one of said communications protocols for communicating said transmission data with one or more of said plurality of predetermined apparatuses,

said second communications protocol being substantially different from said first communications protocol;

executing said format function using a processor of said remote control device, said format function being configured to transform at least a portion of said transmission data into a bit stream, using the properties of said second communications protocol defined by the portion of the protocol data; and

communicating said bit stream to said at least one other apparatus according to said second communications protocol.

22. A method of configuring a remote control device for communicating transmission data, according to one of a plurality of communications protocols, to at least one of a plurality of predetermined apparatuses, said remote control device being initially configured to communicate said transmission data according to a first one of said communications protocols, said remote control device being configured to accept an interface card, said interface card having indicia

formed thereon and a memory configured adjacent said indicia, said memory having at least a portion of protocol data and an associated format function stored therein, said portion of the protocol data describing properties of a second one of said communications protocols for communicating said transmission data with one or more of said predetermined apparatuses, said second communications protocol being substantially different from said first communications protocol, said method comprising the steps of:

providing said interface card to a user for insertion into said remote control device, wherein a processor of said remote control device is configured to perform the following steps:

determining specific data related to a selection of at least one of said indicia;

selecting said portion of the protocol data and said format function depending on said specific data; and

executing said format function so that the format function transforms at least a portion of said transmission data into a bit stream, using the properties of said second communications protocol defined by said portion of the protocol data, for communication of said bit stream to said at least one predetermined apparatus according to said second communications protocol.

* * * * *

UNITED STATES PATENT AND TRADEMARK OFFICE

CERTIFICATE OF CORRECTION

PATENT NO. : 7,259,710 B2
APPLICATION NO. : 10/635491
DATED : August 21, 2007
INVENTOR(S) : Kisliakov

It is certified that error appears in the above-identified patent and that said Letters Patent is hereby corrected as shown below:

DRAWINGS:
Sheet, 9, FIG. 9, at step 913, "'INSERT'." should read -- 'INSERT', --.

COLUMN 1:
Line 38, "modulation," should read -- modulation', --.

COLUMN 3:
Line 67, "suitable" should read -- suitably --.

COLUMN 7:
Line 2, "protocols" should read -- protocol --; and
Line 14, "device device," should read -- device, --.

COLUMN 10:
Line 6, "and" should be deleted; and
Line 8, "FIG.**6**(b)." should read -- FIG.**6**(b); --.

COLUMN 13:
Line 39, "Cards." should read -- Cards'. --.

COLUMN 14:
Line 48, "can any" should read -- can --.

COLUMN 22:
Table 5, "Description)" should read -- Description --.

COLUMN 23:
Table 6, "X value of the bottom-right hand corner co-ordinates" should read -- X value of the bottom-right-hand corner co-ordinate --.

COLUMN 28:
Table 11, "ScrollLock The Scroll Lock function is currently active 0x0008" (second occurrence) should be deleted.

UNITED STATES PATENT AND TRADEMARK OFFICE

CERTIFICATE OF CORRECTION

PATENT NO. : 7,259,710 B2
APPLICATION NO. : 10/635491
DATED : August 21, 2007
INVENTOR(S) : Kisliakov

It is certified that error appears in the above-identified patent and that said Letters Patent is hereby corrected as shown below:

COLUMN 31:
Table 12, "(e.g., the settop" should read -- (e.g., the set-top --.

COLUMN 33:
Line 59, "a" should read -- as --.

COLUMN 38:
Line 58, "unambiguous" should read -- unambiguous. --.

COLUMN 39:
Line 12, "describe" should read -- described --.

COLUMN 42:
Table 18-continued, "Keymap Table A pointer to an lookup" should read -- Keymap Table A pointer to a lookup --.

COLUMN 44:
Line 59, "long" should read -- long. --.

COLUMN 46:
Line 15, "modeis" should read -- mode is --.

COLUMN 47:
Line 48, "te" should read -- the --.

COLUMN 49:
Line 46, "7.0 Fireware Routines" should read -- 7.0 Firmware Routines --.

COLUMN 51:
Line 6, "te" should read -- the --;
Line 26, "FIG.**38**" should read -- FIG. **38**. --; and
Line 57, "proceeds" should read -- proceeds to --.

COLUMN 52:
Line 53, "**12C**" should read -- **I2C** --; and
Line 64, "that" should be deleted.

UNITED STATES PATENT AND TRADEMARK OFFICE

CERTIFICATE OF CORRECTION

PATENT NO. : 7,259,710 B2
APPLICATION NO. : 10/635491
DATED : August 21, 2007
INVENTOR(S) : Kisliakov

It is certified that error appears in the above-identified patent and that said Letters Patent is hereby corrected as shown below:

COLUMN 53:
Lines 59-60, "Background Move" should read -- Background-Move --.

COLUMN 56:
Lines 13, "[4," should read -- (4, --.

COLUMN 60:
Line 24, "will" should read -- will be --;
Line 24, "FIG. **9**" should read -- FIG. **9**. --;
Line 25, ".The" should read -- The --; and
Line 28, "FIG. **49**" should read -- FIG. **49**. --.

COLUMN 64:
Line 28, "the," should read -- the --.

COLUMN 69:
Line 13, "1001." should read -- 100I. --;
Line 14, "1001" should read -- 100I. --; and
Line 19, "1001" should read -- 100I. --.

Signed and Sealed this

Twenty-sixth Day of August, 2008

JON W. DUDAS
Director of the United States Patent and Trademark Office