Trials@uspto.gov
571-272-7822

Paper 7
Entered: February 10, 2023

UNITED STATES PATENT AND TRADEMARK OFFICE

BEFORE THE PATENT TRIAL AND APPEAL BOARD

SPECTRUM SOLUTIONS, L.L.C.,
Petitioner,

v.

DNA GENOTEK INC.,
Patent Owner.

IPR2022-01347
Patent 11,002,646 B2

Before DONNA M. PRAISS, CHRISTOPHER M. KAISER, and JAMIE T. WISZ, *Administrative Patent Judges*.

PRAISS, *Administrative Patent Judge*.

DECISION
Granting Institution of *Inter Partes* Review
35 U.S.C. § 314

I. INTRODUCTION

Spectrum Solutions, L.L.C. ("Petitioner")[1] filed a Petition requesting *inter partes* review of claims 1, 3–8, 11, and 12 ("the challenged claims") of U.S. Patent No. 11,002,646 B2 (Ex. 1001, "the '646 patent"). Paper 1 ("Pet."). DNA Genotek Inc. ("Patent Owner")[2] filed a Preliminary Response. Paper 6 ("Prelim. Resp.").

Under 35 U.S.C. § 314(a), an *inter partes* review may not be instituted unless the information presented in the petition "shows that there is a reasonable likelihood that the petitioner would prevail with respect to at least 1 of the claims challenged in the petition." The following findings of fact and conclusions of law are not final, but are made for the sole purpose of determining whether Petitioner meets the threshold for initiating review. Any final decision shall be based on the full trial record, including any response timely filed by Patent Owner. Any argument not raised by Patent Owner in a timely-filed response may be deemed waived.

For the reasons stated below, we determine that Petitioner has established a reasonable likelihood that it would prevail with respect to at least one claim. We hereby institute an *inter partes* review as to claims 1, 3–8, 11, and 12 of the '646 patent based upon Petitioner's asserted grounds of unpatentability.

---

[1] Petitioner identifies itself as the real party in interest. Pet. 1. In addition, Petitioner notes that Spectrum Holdco LLC is its parent company and that Spectrum Holdco LLC and Spectrum Intermediate LLC "have a financial interest in, or could be substantially affected by the outcome of, this proceeding." *Id.*

[2] Patent Owner identifies itself as the real party in interest and notes that it is a wholly owned subsidiary of OraSure Technologies, Inc. Paper 4, 2.

II. BACKGROUND

A. Related Matters

The parties indicate that the '646 patent is the subject of *DNA Genotek Inc. v. Spectrum Solutions LLC*, No. 21-cv-0516-DMS-LL (S.D. Cal.) ("the parallel district court litigation"). Pet. 1; Paper 4, 2.

Patent Owner further identifies litigation between Petitioner and a third party, Longhorn Vaccines & Diagnostic Inc., in the district court in Utah and several *inter partes* review proceedings filed by Petitioner as "related litigation." Paper 4, 2–3. These matters do not appear to include assertions that the '646 patent is infringed or unpatentable.

B. The '646 patent

The '646 patent is titled "Devices, Solutions and Methods for Sample Collection." Ex. 1001, code (54). The '646 patent describes the field of disclosure as relating to "devices, solutions and methods for collecting samples of bodily fluids or other substances." *Id.* at 1:21–22. The '646 patent describes saliva and urine as examples of bodily fluids that "may enable large-scale 'population-sized' epigenetic research." *Id.* at 2:51–53. Specifically, the '646 patent states that "home-base[d] sample collection . . . may allow for a much wider range of research options available as it can greatly increase participant numbers and samples can be more easily shipped by the subjects from anywhere." *Id.* at 2:53–57.

The '646 patent describes as beneficial the ability to "securely house a toxic preservative solution in a closed chamber" of the device to preserve specimens from a widely geographically dispersed population without exposing the donor or laboratory technician to the toxic solution. *Id.* at 3:60–4:8. However, the '646 patent states that existing sample collection devices

utilize "sharp extruding objects and thin pierceable membranes" that "represent a safety hazard to the sample donor as any wrong manipulation (such as with a finger nail) can lead to piercing of the membrane and release of the solution." *Id.* at 4:16–31. In addition, the '646 patent describes existing treatments for treating cells to maintain their antigen profiles and epigenomic profiling containing lysine, glycine, and formaldehyde for stabilizing cells from blood, which will not protect cells from proteases found in bodily fluids such as saliva. *Id.* at 4:37–49.

The '646 patent describes the invention as providing a safe and easy to use sample collection device for naturally expressed bodily fluids that uses a minimum amount of parts, does not include sharp objects, and does not require removal or exchange of a piece or object thereof apart from depositing the sample and closing the sample collection device. *Id.* at 4:53–5:7. The '646 patent describes an embodiment as having a tube with a reservoir for collecting sample fluid, a cap being securely coupled to the tube, and an annular blocking member that moves from a position where the annular blocking member is covering an aperture to a position in which the annular blocking member is not covering the aperture, thus allowing sample preserving fluid or material to release from an interior space to interact with the sample. *Id.* at 14:37–53. The '646 patent describes the cap and tube as being threadably engaged and also the annular blocking member being threadably engaged along the side of the inner walls. *Id.* at 14:54–15:5. Figure 3B below depicts an embodiment.

FIG. 3B

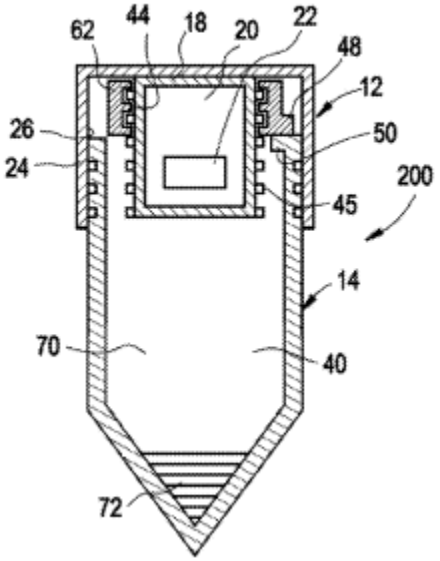

Figure 3B above shows a sample collection device in which cap 12 is coupled to tube 14 and movable annular member 62 is moved to a position where it does not cover aperture 22 in the inner wall, thereby allowing the sample preserving fluid to be released from interior space 20 and to interact with sample 72. Ex. 8:54–58, 14:37–48.

C. Illustrative Claim

Petitioner challenges claims 1, 3–8, 11, and 12. Pet. 23. Claim 1 is the sole independent claim. Ex. 1001, 22:16–47. Claims 3–8, 11, and 12 depend from claim 1. *Id.* at 22:53–23:8, 23:17–24:6.

Claim 1 is reproduced below.

> 1. A kit for collecting and preserving a biological sample, the kit comprising:
>
> a sample collection vessel, the sample collection vessel comprising:
>
> a sample collection reservoir having an opening configured to receive the biological sample from a user into the sample collection reservoir;

a connection member disposed on an exterior portion of the sample collection vessel and adjacent to the opening;

a cap, the cap comprising:

a reagent chamber configured to store a reagent; and

a complementary connection member configured to engage the connection member of the sample collection vessel; and

a movable annular valve configured to associate with the cap and with the opening of the sample collection reservoir, the movable annular valve comprising:

an inner cylinder in fluid-tight association with the cap and comprising a sidewall, the sidewall comprising a fluid vent; and

an outer cylinder in fluid-tight association with the inner cylinder and associated with the opening of the sample collection reservoir, the outer cylinder comprising an aperture defined by an interior sidewall of the outer cylinder,

wherein the aperture accommodates at least a portion of the inner cylinder,

wherein the interior sidewall obstructs the fluid vent when the movable annular valve is closed, and

wherein the interior sidewall does not obstruct the fluid vent when the movable annular valve is open.

Id. at 22:16–47.

D. Asserted Grounds of Unpatentability

Petitioner, supported by the declarations of Karl R. Leinsing, MSME, PE (Ex. 1002) and Vincent A. Fischetti, Ph.D. (Ex. 1011), asserts the following four grounds of unpatentability (Pet. 23):[3]

[3] The relevant sections of the Leahy-Smith America Invents Act ("AIA"),

Claim(s) Challenged	35 U.S.C. §	Reference(s)/Basis
1, 3–8, 11, 12	103(a)	Plante,[4] Cho[5]
1, 3–8, 11, 12	103(a)	Plante, Cho, Maples[6]
1, 3–8, 11, 12	103(a)	Plante, Patterson[7]
1, 3–8, 11, 12	103(a)	Plante, Patterson, Maples

III. ANALYSIS

A. Legal Standard

A patent claim is unpatentable under 35 U.S.C. § 103(a) if the differences between the claimed subject matter and "the prior art are such that the subject matter, as a whole, would have been obvious at the time the invention was made to a person having ordinary skill in the art to which said subject matter pertains." *KSR Int'l Co. v. Teleflex Inc.*, 550 U.S. 398, 406 (2007). The question of obviousness is resolved on the basis of underlying factual determinations including: (1) the scope and content of the prior art; (2) any differences between the claimed subject matter and the prior art; (3) the level of ordinary skill in the art; and (4) when in evidence, objective evidence of nonobviousness. *Graham v. John Deere Co.*, 383 U.S. 1, 17–18 (1966).[8]

Pub. L. No. 112–29, took effect on March 16, 2013. The '646 patent claims priority to applications with filing dates before this date. *See* Ex. 1002, code (60), (63). For the purposes of this Decision, pre-AIA statutes apply.

[4] US 2012/0325721 A1, published Dec. 27, 2012 (Ex. 1003).

[5] WO 2005/051775 A2, published June 9, 2005 (Ex. 1004).

[6] WO 2004/017895 A2, published Mar. 4, 2004 (Ex. 1009).

[7] US 7,464,811 B2, issued Dec. 16, 2008 (Ex. 1005).

[8] At this stage of the proceeding, the parties have not provided evidence of objective indicia of nonobviousness.

B. Level of Ordinary Skill in the Art

In order to determine whether an invention would have been obvious at the time the application was filed, we consider the level of ordinary skill in the pertinent art at the critical time. *Graham*, 383 U.S. at 17. The resolution of this question is important because it allows us to "maintain[] objectivity in the obviousness inquiry." *Ryko Mfg. Co. v. Nu–Star, Inc.*, 950 F.2d 714, 718 (Fed. Cir. 1991). In assessing the level of ordinary skill in the art, various factors may be considered, including the "type of problems encountered in the art; prior art solutions to those problems; rapidity with which innovations are made; sophistication of the technology; and educational level of active workers in the field." *In re GPAC, Inc.*, 57 F.3d 1573, 1579 (Fed. Cir. 1995) (quotation omitted). Generally, it is easier to establish obviousness under a higher level of ordinary skill in the art. *Innovention Toys, LLC v. MGA Entm't, Inc.*, 637 F.3d 1314, 1323 (Fed. Cir. 2011) ("A less sophisticated level of skill generally favors a determination of nonobviousness . . . while a higher level of skill favors the reverse.").

Petitioner asserts that a person having ordinary skill in the art (POSITA) "would have had at least a Bachelor's degree in mechanical engineering, biomedical engineering, or similar technical degree and at least 3 years of experience in the medical device industry, including experience with containers and valves used in disposable medical devices." Pet. 16 (citing Ex. 1002 ¶ 49). Petitioner further asserts that such a person would have collaborated with a team member with training and experience in the chemical/biological aspects of the invention, having a Ph.D. in microbiology, molecular biology, biochemistry, or related discipline and "at

least two years of post-graduate experience in the area of biological sample preservation and nucleic acid extraction, preservation, and analysis." *Id.* at 16–17 (citing Ex. 1011 ¶¶ 24–26).

Patent Owner agrees that a POSITA would have a combination of mechanical and chemical/biological skill sets, but disagrees that a POSITA would necessarily collaborate as team members because a POSITA could have both the relevant mechanical and chemical skills. Prelim. Resp. 12–13 (citing Ex. 2001 ¶ 31).

For purposes of this Decision, we need not choose between the parties' proposed levels of one of ordinary skill in the art, which are quite similar and primarily differ in the attribution of the level of skill being to a person or to a team of people. In addition, neither party asserts that the obviousness analyses in this case would turn on which definition is adopted. *See* Pet. 17 (Petitioner stating that the "Petition does not turn on this specific definition of the level of ordinary skill.").

C. Claim Construction

In an *inter partes* review proceeding based on a petition filed on or after November 13, 2018, a patent claim shall be construed using the same claim construction standard that would be used to construe the claim in a civil action under 35 U.S.C. § 282(b). 37 C.F.R. § 42.100(b) (as amended Oct. 11, 2018). This rule adopts the same claim construction standard used by Article III federal courts, which follow *Phillips v. AWH Corp.*, 415 F.3d 1303 (Fed. Cir. 2005) (en banc), and its progeny. Under this standard, the words of a claim are generally given their "ordinary and customary meaning," which is the meaning the term would have to a person of ordinary

skill at the time of the invention, in the context of the entire patent including the specification. *See Phillips*, 415 F.3d at 1312–13.

1. "Biological Sample"/"Preserving a Biological Sample"

Petitioner asserts that claim 1's preamble "collecting and preserving a biological sample" is limiting because the only sample described in the Specification as being preserved are cells, thus, Petitioner proposes the following constructions. Pet. 17–18.

Claim Term	Petitioner's Proposed Construction
Biological sample	Cells
Preserving a biological sample	Preventing cells from having their antigens degraded such that they can be purified or enriched based on their antigens, and preventing alterations in the cellular epigenome

Patent Owner submits that no claim construction is necessary because Petitioner acknowledges that the asserted grounds do not depend on adoption of the proposed claim construction. Prelim. Resp. 11–12 (citing Pet. 17).

We agree that it is not necessary for us to construe this claim term at this stage of the proceeding because neither party asserts that it is material to the asserted grounds in the Petition. *See Nidec Motor Corp. Zhongshan Broad Ocean Motor Co.*, 868 F.3d 1013, 1017 (Fed. Cir. 2017) ("[W]e need only construe terms 'that are in controversy, and only to the extent necessary to resolve the controversy.'" (quoting *Vivid Techs., Inc. v. Am. Sci. & Eng'g, Inc.*, 200 F.3d 795, 803 (Fed. Cir. 1999))).

"Whether to treat a preamble as a limitation is a determination 'resolved only on review of the entire[ ] . . . patent to gain an understanding of what the inventors actually invented and intended to encompass by the

claim.'" *Catalina Marketing Int'l., Inc. v. Coolsavings.com, Inc.*, 289 F.3d 801, 808 (Fed. Cir. 2002) (quoting *Corning Glass Works v. Sumitomo Electric U.S.A.*, Inc., 868 F.2d 1251, 1257 (Fed. Cir. 1989)). "In general, a preamble limits the invention if it recites essential structure or steps, or if it is 'necessary to give life, meaning, and vitality' to the claim." *Id.* (quoting *Pitney Bowes, Inc. v. Hewlett-Packard Co.*, 182 F.3d 1298, 1305 (Fed. Cir. 1999)). "Conversely, a preamble is not limiting 'where a patentee defines a structurally complete invention in the claim body and uses the preamble only to state a purpose or intended use for the invention.'" *Id.* (quoting *Rowe v. Dror*, 112 F.3d 473, 478 (Fed. Cir. 1997)).

The court in *Catalina* noted that although no litmus test exists for determining whether to treat a preamble as a limitation, several "guideposts" have emerged from the case law in this area. *Id.* In particular, guideposts tending to show that the preamble is a claim limitation include: Jepson claiming, dependence on a particular disputed preamble phrase for antecedent basis, when the preamble is essential to understand limitations or terms in the claim body, and when the preamble recites additional structure or steps underscored as important by the specification. *Id.* On the other hand, the preamble might not constitute a claim limitation when the claim body describes such a structurally complete invention that deleting the preamble phrase does not affect the structure or steps of the claimed invention. *Id.* at 809. Also, "preambles describing the use of an invention generally do not limit claims because the patentability of apparatus or composition claims depends on the claimed structure, not on the use or purpose of the structure." *Id.*

On the present record, we note that claim 1 recites a "kit for collecting and preserving a biological sample" and that the body of the claim refers back to "the biological sample" in the context of "a sample collection reservoir having an opening configured to receive the biological sample from a user into the sample collection reservoir." Ex. 1001, 22:20–22. Thus, should a determination become necessary as to whether the preamble is a claim limitation, the pertinent inquiry will be whether the use of the preamble term in the body of the claim indicates the preamble limits the scope of the claim. *See Shoes by Firebug LLC v. Stride Rite Children's Grp., LLC*, 962 F.3d 1362, 1368 (Fed. Cir. 2020) ("While antecedent basis alone is not determinative of whether a preamble is limiting, use of preamble terms to define positive limitations in the body of claims can evince an inventor's intent that the preamble limit the scope of the claim.").

2. "Annular Valve"

Petitioner asserts the following claim construction for "annular valve" as recited in the claims and contends Patent Owner's proposed claim construction for the term in the related litigation reads on features recited elsewhere in the claim regarding relative positions. Pet. 19; Ex. 1013, 32 (Petitioner's Claim Construction Brief); Ex. 1014, 22 (Patent Owner's Claim Construction Brief).

Patent Owner submits that no claim construction is necessary because Petitioner acknowledges that the asserted grounds do not depend on adoption of the proposed claim construction. Prelim. Resp. 11–12 (citing Pet. 17). We agree.

3. "Associate"/"Associated"

Petitioner asserts that claim 1's use of the term "associate" and variations thereof should be construed to mean "contact," "contacting," "contact between," and "configured to contact" as appropriate. Pet. 19–20. Petitioner asserts that its construction is supported by the '646 patent's Figures 3A and 3B identified in an interview summary record in the '646 patent's prosecution history which depict physical contact. *Id.* at 20–21 (citing Ex. 1012, 24–25). Petitioner also directs us to the '646 patent's description of "*to engage*" the coupling members of the cap and tube and asserts "[a]ny construction besides 'contact' would broaden the claims beyond the invention described in the patent." *Id.* at 21. Nevertheless, Petitioner concludes that patentability of the claims does not rest on a construction for the recited "associate" features. *Id.* at 22.

Patent Owner submits that no claim construction is necessary because Petitioner acknowledges that the asserted grounds do not depend on adoption of the proposed claim construction. Prelim. Resp. 11–12 (citing Pet. 17). We agree.

D. Discretionary Denial

Petitioner asserts that we should not deny institution under 35 U.S.C. § 325(d) because (1) this is the first petition challenging the '646 patent and (2) the prior art and arguments present in the Petition were not considered during examination of the '646 patent. Pet. 82. Petitioner also asserts that we should not exercise our discretion to deny institution under 35 U.S.C. § 314(a) in view of the parallel district court litigation. *Id.* at 82–85. Patent Owner does not assert that discretionary denial of the Petition is appropriate under either Section 325(d) or 314(d). For this reason, we do not exercise

our discretion to deny institution.

E. Overview of the Asserted Art

1. Plante (Exhibit 1003)

Plante is titled "Saliva Sample Collection Systems." Ex. 1003, code (54). Plante describes a receiving vessel having integrated threads and a complementary cap element including cooperating threads along with a reservoir with piercable thin-film membrane. *Id.* at code (57). Plante discloses that the reservoir contains a special formula to stabilize and preserve a biological sample such as saliva. *Id.* ¶ 35. Plante describes a carefully positioned knife integrated with the receiving vessel which pierces the membrane when the cap is screwed onto the receiving vessel and advances in an axial direction towards the receiving vessel. *Id.* Plante describes the preserving fluid passing into the receiving vessel after the film is pierced to mix with the collected saliva, and a liquid-tight seal forming between an annular flange of the sealing cap and an inside surface of the receiving vessel. *Id.* ¶ 38. Plante's Figure 1 is shown below.

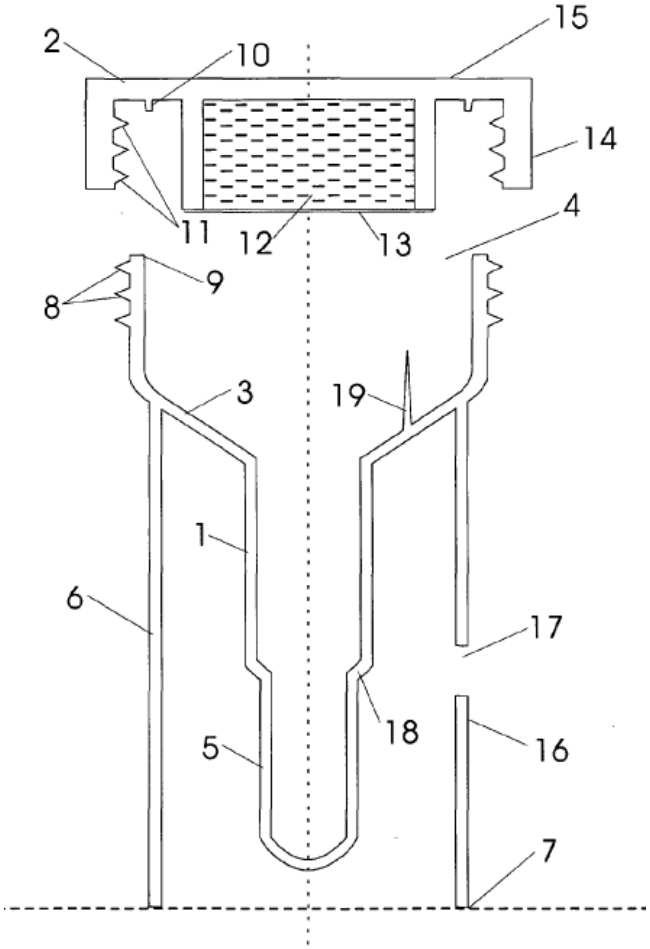

Plante's Figure 1 above depicts receiving vessel 1 having entrance aperture 4, cylindrically tubular portion 5, carefully positioned knife 19 integrated within the receiving vessel, and thread set system 8 formed as a part of a coupling means between the receiving vessel and cap portion 2. *Id.* ¶ 35. Plante's Figure 1 above also shows cooperating thread set 11 formed on an inside cylindrical surface of cap 2 and liquid tight reservoir 12 having a surface which may be pierced or otherwise compromised, such as a thin-film membrane or foil 13. *Id.*

2. Cho (Exhibit 1004)[9]

Cho is titled "Bottle" and describes "a bottle, which contains two kinds of materials separately in two spaces in a bottle body and communicates the separated spaces with each other as necessary so that the two materials can be mixed together." Ex. 1004, codes (54), (57). Cho states that "[i]t is . . . often necessary to mix two kinds of different materials together in a variety of industrial fields." *Id.* at 3:9–10. Cho gives as an example a coffee-based beverage being mixed with sugar or cream powder and states "medicines and chemicals are similar cases." *Id.* at 3:10–12.

Cho's embodiment shown in Figure 44 is reproduced below.

FIG. 44

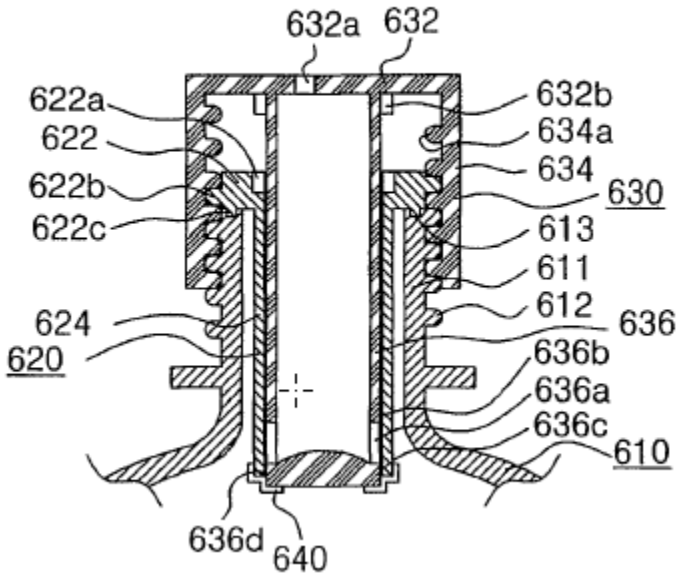

Figure 44 above depicts bottle body 610 having external threads 612 formed around the circumferential surface of mouth 611, which threads interact with internal threads 634a on upper cap 634. *Id.* at 48:15–18, 49:6–10. Cho

[9] Citations herein are to Cho's original pagination.

describes additive storage container 620 comprising a circular end plate 622 and an inner cap 624 that extends downward in an axial direction and is axially inserted into mouth 611. *Id.* at 48:27–31. Cho describes slider 636 extending in an axial direction from finish plate 632 at a position spaced apart from upper cap 634 and inserted into inner cap 624. *Id.* at 49:10–13. Cho describes ring-type seal protrusions 636b and 636c formed around the outer circumferential surface of slider 636 at positions above and below discharge ports 636a to prevent additive from leaking through discharge ports 636a. *Id.* at 49:16–21. Cho describes bursting film 640 preferably made of aluminum film to close the lower ends of both inner cap 624 and slider 636. *Id.* at 49:24–27. Cho describes the bottle cap in operation being rotated so that the lower end of slider 636 tears off bursting film 640 so that additive discharges from additive storage container 620 though discharge ports 636a into the bottle body. *Id.* at 50:4–12.

3. Patterson (Ex. 1005)

Patterson is titled "Mixing Cap and Method for Use Thereof." Ex. 1005, code (54). Patterson describes a "pre-loaded" mixing cap discharging selected dry or liquid ingredient from an outer housing through apertures of an inner tube, permitting the ingredients to flow through the apertures of the inner tube and into the liquid contents of a bottle. *Id.* at code (57). Patterson discloses the mixing cap for use with "powdered sports drinks, supplements and the like" as well as "any selected ingredient, additive or the like" including "medicines, chemicals, oils, or the like." *Id.* at 8:9–19. Patterson's Figure 3 is shown below.

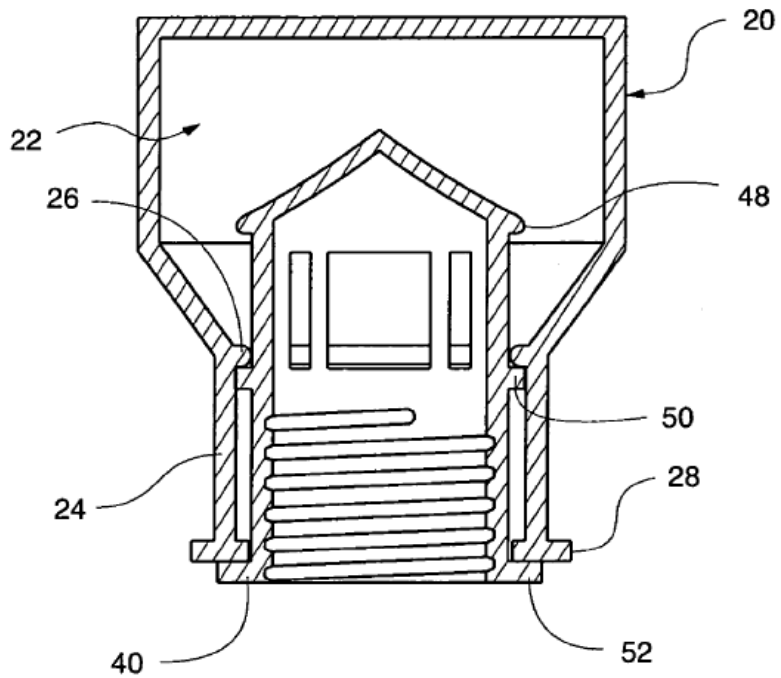

Patterson's Figure 3 above shows an "open position" of a mixing cap after outer housing 20 is pushed to downwardly slide neck portion 24 over a sidewall of inner tube 40 to introduce the dry/liquid ingredients of storage receptacle 22 through apertures in inner tube 40 and into the liquid contents of a bottle. *Id.* at 6:46–7:5.

4. Maples (Ex. 1009)

Maples is titled "Formaldehyde-Ammonium Salt Complexes for the Stabilization of Blood Cells." Ex. 1009, code (54). Maples describes "a method and composition for stabilizing biological cells and tissues" to "prevent[] or reduce[] cellular activation and response to environmental change without changing the antigenic makeup of the cells." *Id.* at 5:5–8.

F. Unpatentability Grounds

1. Unpatentability over Plante and Cho

Petitioner asserts that claims 1, 3–8, 11, and 12 are unpatentable under 35 U.S.C. § 103(a) over the combination of Plante in view of Cho, citing the

Declaration of Karl R. Leinsing for support. Pet. 24–57 (citing Ex. 1002 ¶¶ 30–31).

a. *Claim 1*

Petitioner contends Plante's system for the collection, storage, and shipping of biological matter, specifically saliva, discloses every element of claim 1 except for the recited "movable annular valve." *Id.* at 24, 29. Petitioner contends that it would have been obvious to a POSITA to use Cho's cap having a movable annular valve in Plante's sample collection system for the reasons: (1) Cho and Plante are in the same field of endeavor and address the same problem of providing an easy-to-use container for mixing two materials, (2) Cho's cap with an annular valve is a safer design than Plante's approach of using a knife in the vessel in view of a federal mandate to choose devices without sharps where possible and in view of the difficulty to mold sharp thin features in plastic, and (3) it would have been a simple substitution of one known element for another—Plante's cap for Cho's cap—to avoid the use of a knife in a vessel. *Id.* at 29–31 (citing Ex. 1002 ¶¶ 67–75). According to Petitioner, a POSITA would have expected Cho's cap to perform successfully the same function of releasing a reagent when connected to Plante's sample collection vessel because Cho's cap functions to release a reagent into a bottle when fastened to the bottle. *Id.* at 31 (citing Ex. 1002 ¶ 76).

Regarding independent claim 1, Petitioner identifies in Plante's Figure 1 the recited sample collection vessel having a sample collection reservoir and a connection member disposed on an exterior portion of the sample collection vessel in the form of threads. *Id.* at 32–34 (citing Ex. 1003, Fig. 1). In parallel, Petitioner identifies Cho's threaded connection

to screw a cap around an outer circumferential surface of Cho's container for mixing two materials. *Id.* at 34–35 (citing Ex. 1004, 2:7–10, 48:16–19, 49:6–10, Figs. 43–45B). Regarding the cap required by claim 1, Petitioner contends both Plante and Cho disclose caps that include a reagent chamber; Plante describes a cap having a reservoir to contain a "preserving fluid" while Cho discloses a cap having a reservoir for an additive material that includes "medicines and chemicals" which are prevented from "being changed or deteriorated." *Id.* at 35–37 (citing Ex. 1003 ¶¶ 35, 41, Fig. 1 (sealing cap 2); Ex. 1004, 1:8–12, 19–24, 55:13–17, 55:22–25, Fig. 44 (opening unit 630); Ex. 1002 ¶ 87). Petitioner identifies in each of Plante and Cho's caps the "complementary connection member[s]" required by claim 1. *Id.* at 38–39 (citing Ex. 1003 ¶ 35, Fig. 1 (thread sets 11); Ex. 1004, 49:5–10, Fig. 44 (thread set 634a)).

Regarding the "moveable annular valve" required by claim 1, Petitioner identifies an inner cylinder, outer cylinder, and fluid vent in Cho's Figure 44 by comparison with the '646 patent's Figure 3A structure. Pet. 40.

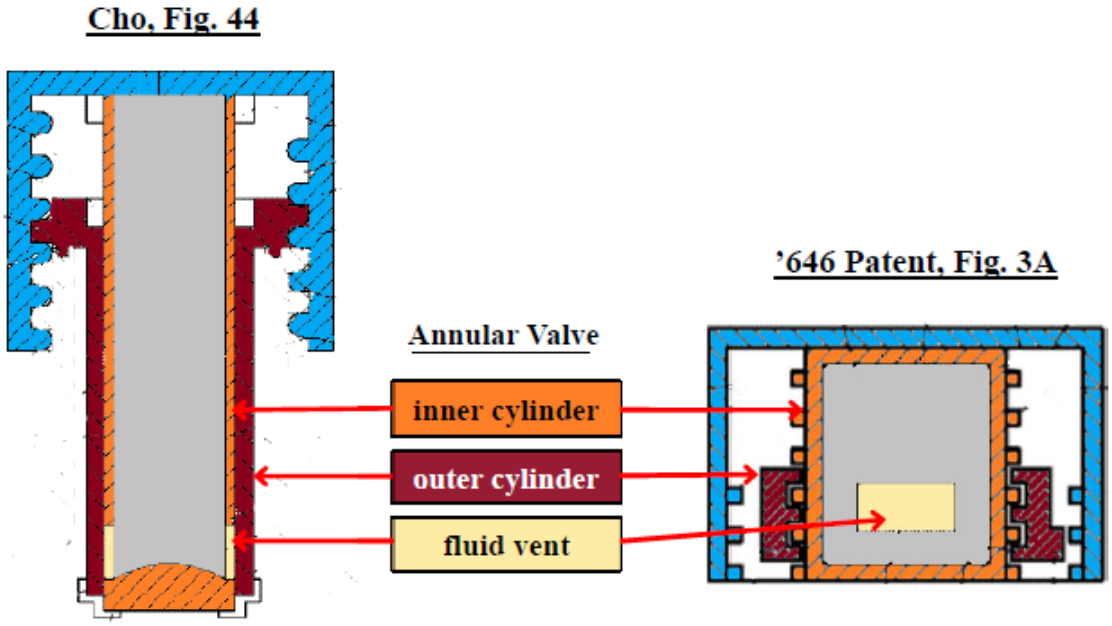

Petitioner's annotated comparison above depicts vents in the inner cylinder that are open or closed based on the relationship to the outer cylinder. Pet. 40–51. Petitioner states Cho's Figure 44 annotated above shows the valve in a closed position. *Id.* at 49. Petitioner annotates Cho's Figure 45A below to show Cho's valve in an open position. *Id.* at 50.

Fig.45A

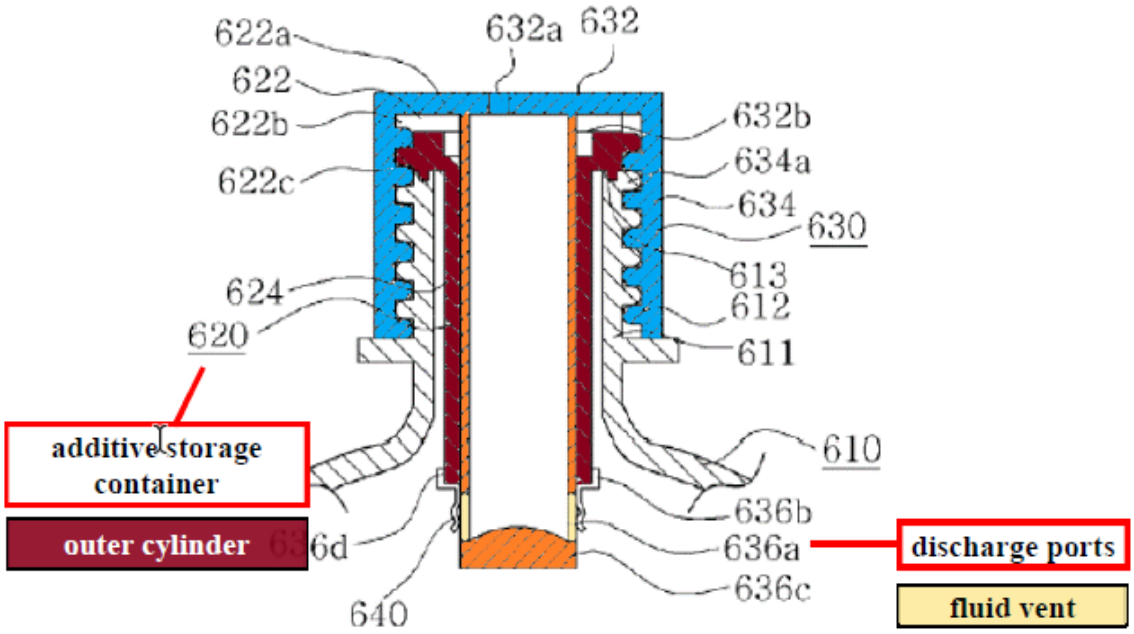

According to Petitioner, annotated Figure 45A above shows slider 636 moves downward through the outer cylinder so that additive is discharged from the additive storage container 620 when discharge port 636a of the inner cylinder (slider 636) is unobstructed by the outer cylinder. *Id.* at 50–51 (citing 1004, 49:34–50:12, Fig. 45A). Thus, Petitioner identifies each of claim 1's limitations in Plante's sample collection kit modified with Cho's moveable annular valve.

Patent Owner contends the Petition should be denied because (1) it fails to include an "analogous art" analysis, (2) Cho is not analogous art to the '646 patent, and (3) the Petition's reasons to combine Plante and Cho do not support the combination. Prelim. Resp. 14–17, 49–50.

Regarding the analogous art issue, Patent Owner asserts that the Petition makes the wrong comparison for determining whether Cho is analogous art because it concludes that Cho is in the same field as Plante rather than analyzing whether Cho is in the same field of endeavor as the '646 patent. *Id.* at 17. Patent Owner also asserts Cho is directed to a different field of endeavor than the '646 patent because the '646 patent is directed to collecting a biological sample and mixing the sample with a preservative prior to shipping the mixture for analysis and Cho is directed to mixing water and flavoring prior to drinking the mixture. *Id.* Patent Owner contends the '646 patent is directed to making a biological sample collection kit safer and easier to use with "a minimum amount of parts," and "limited to no risk of exposure to toxic solutions." *Id.* at 35. Patent Owner asserts that even if Cho's problem faced was "storing a material in a receptacle of a cap to be mixed with the contents of the container by an unskilled user," that is not reasonably pertinent to the problem solved by the '646 patent because Plante already solved the problem of "storage by unskilled users." *Id.* at 41–42.

Upon review of the parties' arguments and supporting evidence, we agree with Patent Owner that the Petition does not provide an explicit analogous art analysis. We note there is no dispute that Plante is analogous art to the '646 patent, as Plante explicitly describes a system for collecting a sample of "biological matter" and preserving the sample with a fluid held in a reservoir in a complementary cap. Prelim. Resp. 19 ("Plante is from the

same field of endeavor."); Pet. 24; Ex. 1003 ¶¶ 2, 18, 19, 21, 41. Thus, the issue at this stage of the proceeding is whether the Petition sufficiently sets forth a basis from which we can determine there is a reasonable likelihood that Cho is analogous art to the '646 patent.

Patent Owner directs us to Cho's objective of "provid[ing] a bottle in which the additive storage container can be completely removed from a bottle body through an opening action of an opening unit." *Id.* at 22–23 (quoting Ex. 1004, 2:4–6). According to Patent Owner, "[t]his object reflects Cho's field of endeavor—to mix ingredients in a bottle so that the bottle can be opened immediately after mixing, at which point the lid is discarded." *Id.* at 23. Regarding Cho's disclosure that the applicable field is directed to mixing "two kinds of different materials together in a variety of industrial fields" and "medicines and chemicals are similar cases" to beverages, Patent Owner asserts Cho's stated objective means the components are immediately consumed after mixing. *Id.* at 23; Ex. 1004, 1:9–12.

Based on the cited record at this stage of the proceeding, we do not find Cho's device to be limited to beverages that are consumed immediately after mixing. Cho states the combination of two materials is applicable to "a variety of industrial fields" including "chemicals," which appears to suggest a non-consumable mixture. Ex. 1004, 1:8–12. In addition, Cho's object of providing an additive storage container that "can be completely removed from a bottle body through an opening action of an opening unit" does not imply either consumption of the contents let alone immediate consumption of the contents. *Id.* at 2:4–6. Therefore, the Petition provides sufficient evidence on this record for purposes of institution that Cho's device is within the same field of endeavor as the '646 patent to provide an easy and

safe device to mix a chemical held within a reservoir of a cap with the contents of a vessel. Ex. 1001, 4:1–4 ("The sample collection device may also allow easy and safe collection of a donor specimen . . . with no risk of exposure of the donor to the toxic solution."); Ex. 1004, 1:3–6, 1:25–27 ("a bottle . . . contain[ing] two kinds of materials in two separate spaces . . . caus[ing] the separate spaces to communicate with each other . . . so that the two materials can be mixed . . . using only a simple action"); Pet. 27 ("Like the '646 patent and Plante, Cho discloses a container 'contain[ing] two kinds of materials in two separate spaces' and subsequent mixing of those materials."); Pet. 29 ("Cho is similarly directed to an easy-to-use container for mixing two materials using only a simple action.").

Even if Cho is not within the same field of endeavor as the '646 patent and in the field of consumer beverage bottles as Patent Owner argues, the Petition sufficiently establishes for purposes of institution that Cho is pertinent to the problem addressed by the '646 patent. The Petition characterizes the problem addressed by Cho as "an easy-to-use container for mixing two materials using only a simple action." Pet. 29 (citing Ex. 1004, 1:3–6, 1:25–27).

Patent Owner argues the Petition mischaracterizes the problem Cho addresses and that the '646 patent also was not solving the problem of "storing a material in a receptacle of a cap to be mixed with the contents of the container by an unskilled user" because "that problem was already solved in the biological sample collection and preservation field." Prelim. Resp. 34.

> A reference is reasonably pertinent if, even though it may be in a different field from that of the inventor's endeavor, it is one which, because of the matter with which it deals, logically

> would have commended itself to an inventor's attention in considering his problem.

In re Clay, 966 F.2d 656, 659 (Fed. Cir. 1992).

In accord with *Clay*, a reference is reasonably pertinent if it logically would have commended itself to an inventor's attention. The '646 patent fairly describes the user of its sample container system as unskilled and it fairly describes the concerns to be addressed as the safe storage of a material in a receptacle in the cap when it describes the "home-base sample collection . . . allow[ing] for a much wider range of research options available" and existing sample collection devices having pierceable membranes as "a safety hazard to the sample donor as any wrong manipulation can lead to piercing the membrane and exposing the [potentially toxic] solution." Ex. 1001, 2:53–58, 4:16–35. Moreover, the '646 patent explicitly states that "there is a need for safer and easier to use sample collection devices." *Id.* at 4:35–36. Similarly, Cho describes its device as "contain[ing] two kinds of materials in two separate spaces" that "communicate with each other as necessary" and the two materials mix together "using only a simple action." Ex. 1004, 1:3–6, 1:25–27.

Since sample collection containers and consumer beverage bottles are both containers for home-based use by the general public for combining an ingredient in a cap reservoir with the contents of the container, with similar concerns of ease of use, safety, and sealed reservoirs, one of skill in the art would have logically looked to other containers, such as the beverage bottle art, to solve problems related to ease of use, safety, and sealed reservoirs for sample collection containers. *Compare* Ex. 1004, 1:26–27 (describing the need to "mix two materials together . . . using only a simple action"), 1:29–2:3 (describing the need to "maintain[] a good seal . . . so that the additive is

not oxygenated or spoiled and the additive storage container can be easily applied") *with* Ex. 1001, 4:1–8 (describing as an object that the "sample collection device may allow easy and safe collection of a donor specimen . . . with no risk of exposure of the donor to the toxic solution [and] allow the donor to safely mix the toxic solution and the specimen . . . with no risk of exposure of the donor to . . . the toxic solution nor any other hazard"), 4:29–31 (describing existing pierceable membrane devices that "can represent a safety hazard to the sample donor as any wrong manipulation can lead to piercing the membrane and exposing the solution").

Regarding the reasons to combine Plante and Cho, we agree with Patent Owner that being analogous art alone is not sufficient reasoning to combine teachings of prior art references. Prelim. Resp. 50. As Patent Owner states, analogous art is a threshold inquiry for combining prior art references. *Id.* at 51. After the Petition asserts the threshold inquiry has been met, it contends a POSITA would have been motivated to modify Plante's sample collection system by replacing Plante's knife in the interest of avoiding risk of injury to a user. Pet. 30. The Petition further states substituting Cho's cap for Plante's cap would eliminate Plante's knife to release material stored in the reservoir and a POSITA would have had a reasonable expectation of success that such a substitution would provide the same desired functionality. *Id.* at 30–31.

Patent Owner asserts that the combination would eliminate Plante's design feature of "reduced parts and increased ease of use" because the "proposed substitutions add parts to Plante's design and/or increases the number of steps required to release the reagent from the cap" thus destroying Plante's basic objective. Prelim. Resp. 54–55 (including an unidentified

figure with numbered parts attributed to Cho). Patent Owner further contends a special feature of Plante's biological material collection device is "safe transmission of biological matter" and Cho is not "designed for transport" because "the cap is intended to be immediately removed so that the mixture can be consumed." *Id.* at 58–59. Patent Owner contends the Petition does not explain (1) why a POSITA would ignore Plante's design choices in favor of Cho's increased parts and (2) how Cho's cap would be sufficiently secure. *Id.* at 57, 59–60.

Patent Owner's argument that substituting Cho's cap for Plante's cap increases the number of parts in Plante's sample collection system is not supported by the current record. Both Plante and Cho disclose devices comprising a container and a cap to be screwed onto the container by an unskilled user to combine the materials in each component. Ex. 1003 ¶ 41 ("[A]n unskilled user preserves the saliva sample merely by screwing the cap to the receiving vessel together."); Ex. 1004, 50:5–8 ("If a user rotates the opening unit 630 clockwise . . . the opening unit 530 moves downward due to the interaction between the external thread 612b and the internal thread 634a. As a result, the state as shown in FIG. 45A is accomplished."); Pet. 50.

Even if Cho's system is constructed from more parts than Plante's system, the Petition identifies a reason for modifying Plante with Cho's valve, namely, to replace Plante's knife in the interest of safety to the user. Pet. 30. "Under the correct analysis, any need or problem known in the field of endeavor at the time of invention and addressed by the patent can provide a reason for combining the elements in the manner claimed." *KSR Int'l Co. v. Teleflex Inc.*, 550 U.S. 398, 420 (2007). "The fact that the motivating

benefit comes at the expense of another benefit, however, should not nullify its use as a basis to modify the disclosure of one reference with the teachings of another. Instead, the benefits, both lost and gained, should be weighed against one another." *Winner Int'l Royalty Corp. v. Wang*, 202 F.3d 1340, 1349 n.8 (Fed. Cir. 2000); *Medichem, S.A. v. Rolabo, S.L.*, 437 F.3d 1157, 1165 (Fed. Cir. 2006) ("a given course of action often has simultaneous advantages and disadvantages, and this does not necessarily obviate motivation to combine"). In addition to the "Needlestick Safety and Prevention Act" that Petitioner cites to support a POSITA having the motivation to remove the sharp element in Plante's system, the '646 patent itself states as a benefit of the claimed design "improved safety for both the sample donor and the end user, since, for example, sharp objects are not included," suggesting that improving safety for sample donors and end users was a concern at the time of invention. Ex. 1001, 5:4–9; Pet. 30 (citing Ex. 1015; Ex. 1002 ¶ 71).

Patent Owner's argument that substitution with Cho's cap has not been shown to be sufficiently secure because Cho's cap is intended to be immediately removed to consume the contents of the bottle is unavailing because Cho's teachings are not limited to beverages. As noted above, Cho states the combination of two materials is applicable to "a variety of industrial fields" including "chemicals" which appears to suggest a non-consumable mixture. Ex. 1004, 1:8–12. In addition, Cho's object of providing an additive storage container that "can be completely removed from a bottle body through an opening action of an opening unit" does not imply either consumption of the contents let alone immediate consumption of the contents. *Id.* at 2:4–6. In addition, the Petition provides a basis to

conclude that Cho's threaded connection to screw a cap on a container is the same as that disclosed by Plante and the '646 patent. Pet. 34–35 (citing Ex. 1003 ¶ 35, Fig. 1; Ex. 1004, 2:7–10, 48:16–19, 49:6–10, Figs. 43–45B; Ex. 1002 ¶¶ 81–83).

Based on the foregoing, we determine that Petitioner demonstrates a reasonable likelihood that claim 1 would have been obvious over the combined disclosures of Plante and Cho.

b. *Claims 3–8, 11, and 12*

Claims 3–8 and 12 depend from claim 1 and claim 11 depends from claim 3.

The Petition identifies the further limitations of claims 3–8, 11, and 12 in the disclosure of Plante and/or Cho. Pet. 51–57.

Patent Owner does not address Petitioner's arguments with respect to claims 3–8, 11, and 12, beyond the arguments discussed above with respect to independent claim 1. Prelim. Resp. 14–62.

Upon review of the parties' arguments and supporting evidence, we determine that Petitioner demonstrates a reasonable likelihood that dependent claims 3–8, 11, and 12 would have been obvious over the combined disclosures of Plante and Cho.

2. Unpatentability over Plante, Cho, and Maples

Petitioner asserts that claims 1, 3–8, 11, and 12 are unpatentable under 35 U.S.C. § 103(a) over the combination of Plante and Cho as discussed above in further view of Maples's disclosure to stabilize biological cells and tissues collected in prior art devices such as Plante, citing the Declaration of Dr. Vincent A. Fischetti for support. Pet. 57–60 (citing Ex. 1011 ¶¶ 32, 36). In particular, Petitioner states that Plante discloses preserving DNA in a

saliva sample, but is silent as to whether DNA is preserved while the cells of the sample remain intact or after being released from the cells. *Id.* at 60 (citing Ex. 1003 ¶ 18). Petitioner contends that to the extent that claim 1's preamble is limiting and is directed to a device that preserves cells, it would have been obvious to a POSITA to preserve cells of a biological sample. *Id.* at 60 (citing Ex. 1011 ¶¶ 9, 33–37).

Having determined that Petitioner demonstrates a reasonable likelihood that claims 1, 3–8, 11, and 12 would have been obvious over the combined teachings of Plante and Cho, including Plante's disclosure of a "preserving fluid" for mixing with a biological sample, we need not consider the further combination with Maples. Plante ¶ 41.

3. Unpatentability over Plante and Patterson

Petitioner asserts that claims 1, 3–8, 11, and 12 are unpatentable under 35 U.S.C. § 103(a) over the combination of Plante and Patterson because Plante discloses every element of claim 1 except for the "movable annular valve" and a person having ordinary skill in the art would have had multiple reasons to use Patterson's cap having a movable annular valve in Plante's sample collection system. Pet. 64 (citing the Declaration of Karl R. Leinsing for support, Ex. 1002 ¶¶ 140–142; Ex. 1003 ¶¶ 6, 25; Ex. 1005, Abstr.).

Petitioner relies on the same disclosures in Plante as applied to the combination of Cho discussed above. *Id.* at 66. Petitioner contends that it would have been obvious to a POSITA to use Patterson's cap having a movable annular valve in Plante's sample collection system for the reasons: (1) Patterson and Plante are in the same field of endeavor and address the same problem of providing an easy-to-use container for mixing two materials, (2) Patterson's cap with an annular valve is a safer design than

Plante's approach of using a knife in the vessel in view of a federal mandate to choose devices without sharps where possible and in view of the difficulty to mold sharp thin features in plastic, and (3) it would have been a simple substitution of one known element for another—Plante's cap for Patterson's cap to avoid the use of a knife in a vessel. *Id.* at 64–66 (citing Ex. 1002 ¶¶ 142–145). According to Petitioner, a POSITA would have expected Patterson's cap to perform successfully the same function of releasing a reagent when connected to Plante's sample collection vessel because Patterson's cap functions to release a reagent into a bottle when fastened to the bottle. *Id.* at 66 (citing Ex. 1002 ¶ 146). Also, Petitioner directs us to Patterson's disclosure that it has medical and chemical applications. *Id.* at 65 (citing Ex. 1005, 8:12–15).

a. *Claim 1*

Regarding independent claim 1, Petitioner contends Plante discloses all of claim 1's limitations for the recited sample collection vessel and cap as set forth with respect to the combination of Plante with Cho and focuses on Patterson's disclosure of claim 1's "movable annular valve." *Id.* at 66.

Regarding the "moveable annular valve" required by claim 1, Petitioner identifies an inner cylinder, outer cylinder, and fluid vent in an annotated version of Patterson's Figure 2 below. Pet. 69.

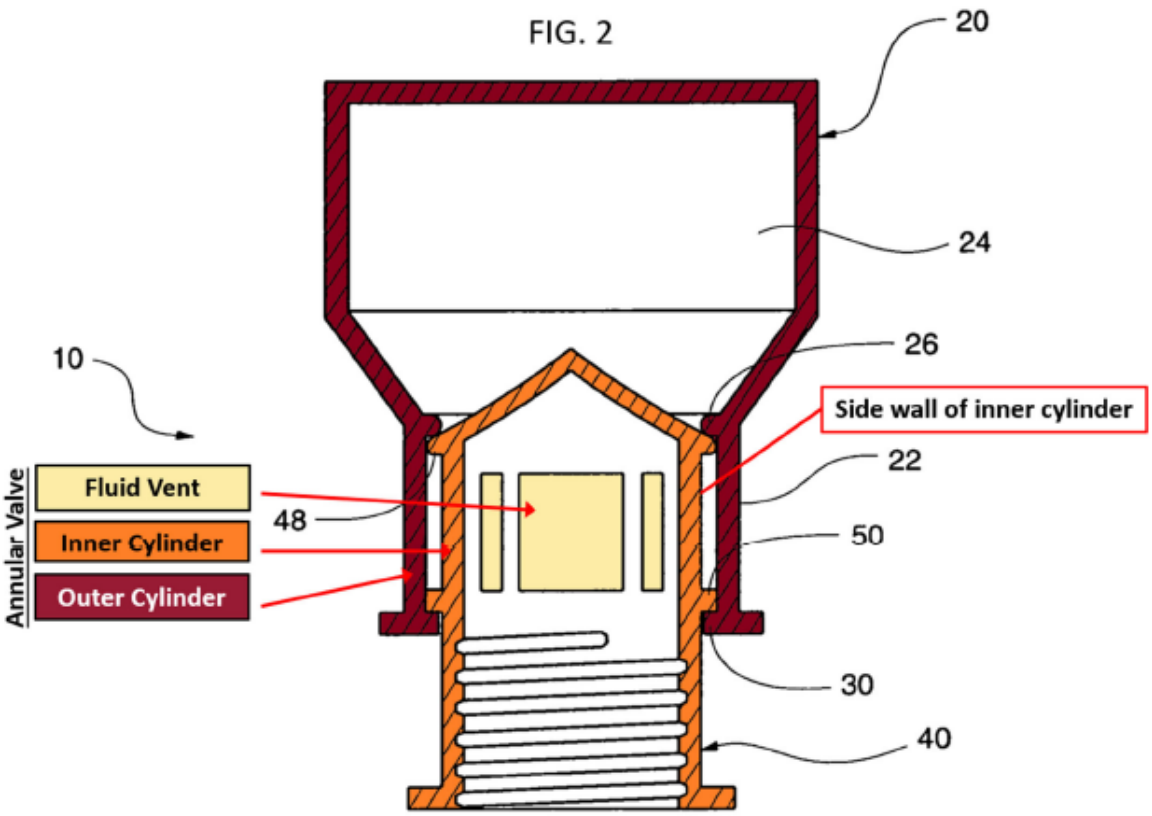

Annotated Figure 2 above is a cross-sectional view of Patterson's mixing cap shown in a closed or inactivated position. Ex. 1005, 5:11–13. Petitioner asserts that Patterson's annular valve is associated with the cap under any possible construction of "associate" because the two pieces of Patterson's mixing cap are the valve. Pet. 68. Petitioner asserts that Patterson's cap would associate with the opening of Plante's sample collection reservoir by screwing onto the opening of Plante's sample collection reservoir. *Id.* (citing Ex. 1002 ¶ 152). Petitioner identifies the required outer cylinder as Patterson's outer housing 20 in fluid-tight association with Patterson's inner tube 40 (claim 1's "inner cylinder") and the required "fluid vent" as Patterson's aperture 46. *Id.* at 69–70 (citing Ex. 1005, 4:19–26, 6:3–7, 6:33–45, Figs. 2–3); Ex. 1002 ¶¶ 156, 158). According to Petitioner, Patterson's outer cylinder is slidably engaged with

the inner cylinder, which is directly connected with the opening of the container. *Id.* at 70 (citing Ex. 1002 ¶ 158). Petitioner asserts that, under Patent Owner's interpretation of "associate," the Patterson's outer cylinder is thus associated with the opening of the sample collection reservoir as required by claim 1. *Id.* Petitioner states that Patterson's inner cylinder screws onto the mouth of the container, however, a POSITA would recognize that either the inner or outer cylinder could be used to engage the container, which is a finite number of choices for the outer cylinder to be associated with the opening of the sample collection reservoir as required by claim 1. *Id.* Petitioner asserts that adapting Patterson's mixing cap so that the outer cylinder directly contacts the opening of the container merely requires "flipping the cap such that the outer cylinder engages the container and the end of the inner cylinder is closed to define the reagent chamber." *Id.* at 70–71 (citing Ex. 1002 ¶ 159).

Regarding the additional limitation "wherein the interior sidewall does not obstruct the fluid vent when the movable annular valve is open," Petitioner annotates Patterson's Figure 3 below to identify the fluid vent not obstructed by the outer cylinder. *Id.* at 74–75 (citing Ex. 1005, Figs. 3–4, 4:27–39, 6:46–67).

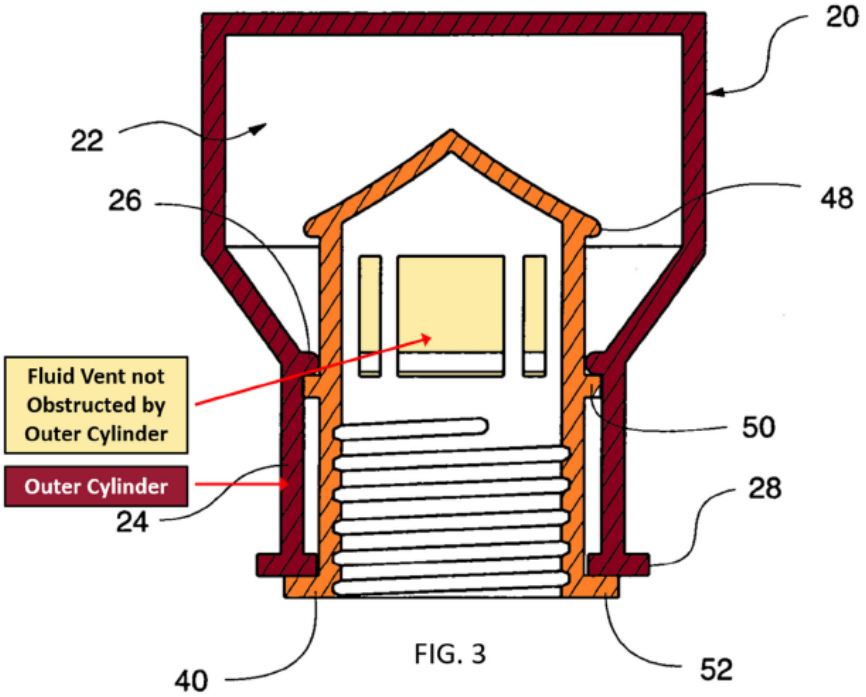

Annotated Figure 3 above shows Patterson's mixing cap in a cross-sectional side view in an open or activated position. Ex. 1005, 5:14–16.

Patent Owner contends the Petition should be denied because (1) it fails to include an "analogous art" analysis, (2) Patterson is not analogous art to the '646 patent, and (3) the Petition's reasons to combine Plante and Patterson do not support the combination. Prelim. Resp. 14–17, 49–50.

Regarding the analogous art issue, Patent Owner asserts that the Petition makes the wrong comparison for determining whether Patterson is analogous art because it concludes that Patterson is in the same field as Plante rather than analyzing whether Patterson is in the same field of endeavor as the '646 patent. *Id.* at 17. Patent Owner also asserts Patterson is directed to a different field of endeavor than the '646 patent because the '646 patent is directed to collecting a biological sample and mixing the sample with a preservative prior to shipping the mixture for analysis and Patterson is directed to mixing water and flavoring prior to drinking the

mixture. *Id.*; *id.* at 25 (asserting Patterson is directed to immediate removal of the cap from a water bottle so that the beverage can be consumed and quoting Ex. 1005, 4:43–45 "removal of the mixing cap enables consumption of the fully mixed beverage."). Patent Owner asserts that "container system" is too broad a field of endeavor because it "encompasses everything from zip-lock bags to trans-oceanic shipping containers." *Id.* at 27. Regarding Patterson's disclosure that the applicable field encompasses "medicines, chemicals, oils, or the like," Patent Owner asserts that, like Cho, Patterson likewise describes nothing "beyond mixing ingredients for consumption." *Id.* at 30–31.

Regarding the problem to be solved, Patent Owner contends the '646 patent is directed to making a biological sample collection kit safer and easier to use with "a minimum amount of parts," and "limited to no risk of exposure to toxic solutions." *Id.* at 35. Patent Owner asserts that even if Patterson's problem faced was "storing a material in a receptacle of a cap to be mixed with the contents of the container by an unskilled user," that is not reasonably pertinent to the problem solved by the '646 patent because Plante already solved the problem of "storage by unskilled users." *Id.* at 41–42.

Upon review of the parties' arguments and supporting evidence, we agree with Patent Owner that the Petition does not provide an explicit analogous art analysis. We note there is no dispute that Plante is analogous art to the '646 patent as Plante explicitly describes a system for collecting a sample of "biological matter" and preserving the sample with a fluid held in a reservoir in a complementary cap. Prelim. Resp. 19 ("Plante is from the same field of endeavor."); Pet. 24; Ex. 1003 ¶¶ 2, 18, 19, 21, 41. Thus, the issue at this stage of the proceeding is whether the Petition sufficiently sets

forth a basis from which we can determine there is a reasonable likelihood that Patterson is analogous art to the ’646 patent.

Patent Owner directs us to Patterson’s description of the technical field: “a mixing cap for engaging the mouth of a conventional personal-sized water bottle, or other liquid-containing bottle, for enabling dry or liquid ingredients contained within the mixing cap to be convenient deposited into the bottle, and mixed with the water or other liquid contents thereof.” *Id.* at 23–24 (quoting Ex. 1005, 1:14–20). According to Patent Owner, Patterson, like Cho, dispenses flavoring into personal-sized water bottles and the immediate removal of the cap from the water bottle to consume the beverage. *Id.* at 24–25. Regarding Patterson’s disclosure of multiple uses including medical and chemical applications, Patent Owner asserts “there is nothing to suggest that Patterson is describing something beyond mixing ingredients for consumption” and that the mixture is immediately consumed. Prelim. Resp. 29, 31; Ex. 1005, 8:12–14.

Based on the cited record at this stage of the proceeding, we do not find Patterson’s device to be limited to beverages that are consumed immediately after mixing. Patterson explicitly states the mixing cap “or any dimensional variation thereof, may be utilized to facilitate the introduction and mixture of any selected ingredient, additive or the like to the contents of a communicating bottle or container.” Ex. 1005, 8:11–14. Thus, Patterson’s disclosure is applicable to an additive to a container and among the additive materials Patterson identifies is “chemicals” which suggests a non-consumable mixture. *Id.* at 8:18; Pet. 65. Therefore, the Petition provides sufficient evidence on this record for purposes of institution that Patterson’s device is within the same field of endeavor as the ’646 patent to provide an

easy and safe device to mix a chemical held within a reservoir of a cap with the contents of a vessel. Ex. 1001, 4:1–4 ("The sample collection device may also allow easy and safe collection of a donor specimen . . . with no risk of exposure of the donor to the toxic solution."); Ex. 1005, Abstract ("[a] mixing cap and method for use thereof . . . to facilitate [] consumer use."), 8:11–18 (the mixing cap "or any dimensional variation thereof, may be utilized to facilitate the introduction and mixture of any selected ingredient, additive or the like to the contents of a communicating bottle or container" including "chemicals").

Even if Patterson is not within the same field of endeavor as the '646 patent and in the field of consumer beverage bottles as Patent Owner argues, the Petition sufficiently establishes for purposes of institution that Patterson is pertinent to the problem addressed by the '646 patent. The Petition characterizes the problem addressed by Patterson as an "easy-to-use container system[] for unskilled users." Pet. 64 (citing Ex. 1005, Abstract).

Patent Owner argues the Petition mischaracterizes the problem Patterson addresses and that the '646 patent also was not solving the problem of "storing a material in a receptacle of a cap to be mixed with the contents of the container by an unskilled user" because "that problem was already solved in the biological sample collection and preservation field." Prelim. Resp. 34.

In accord with *Clay*, a reference is reasonably pertinent if it logically would have commended itself to an inventor's attention. *In re Clay*, 966 F.2d at 659. The '646 patent fairly describes the user of its sample container system as unskilled and it fairly describes the concerns to be addressed as the safe storage of a material in a receptacle in the cap when it describes the

"home-base sample collection . . . allow[ing] for a much wider range of research options available" and existing sample collection devices having pierceable membranes as "a safety hazard to the sample donor as any wrong manipulation can lead to piercing the membrane and exposing the [potentially toxic] solution." Ex. 1001, 2:53–58, 4:16–35. Moreover, the '646 patent explicitly states that "there is a need for safer and easier to use sample collection devices." *Id.* at 4:35–36. Similarly, Patterson describes its device as a "mixing cap . . . preferably pre-loaded during time of manufacture with a selected dry or liquid ingredient to facilitate subsequent consumer use" and that the pre-loaded ingredients "may be introduced or discharged into the bottle by simply depressing the outer housing over the inner tube." Ex. 1005, Abstract.

Since sample collection containers and consumer beverage bottles are both containers for home-based use by the general public for combining an ingredient in a cap reservoir with the contents of the container, with similar concerns of ease of use, safety, and sealed reservoirs, one of skill in the art would have logically looked to other containers, such as the beverage bottle art, to solve problems related to ease of use, safety, and sealed reservoirs for sample collection containers. *Compare* Ex. 1005, Abstract (describing a mixing cap "pre-loaded . . . with a selected dry or liquid ingredient to facilitate subsequent consumer use" and the "[p]re-loaded ingredients . . . may be introduced or discharged into the bottle by simply depressing the outer housing over the inner tube"), *with* Ex. 1001, 4:1–8 (describing as an object that the "sample collection device may allow easy and safe collection of a donor specimen . . . with no risk of exposure of the donor to the toxic solution [and] allow the donor to safely mix the toxic solution and the

specimen . . . with no risk of exposure of the donor to . . . the toxic solution nor any other hazard"), 4:29–31 (describing existing pierceable membrane devices that "can represent a safety hazard to the sample donor as any wrong manipulation can lead to piercing the membrane and exposing the solution").

Regarding the reasons to combine Plante and Patterson, we agree with Patent Owner that being analogous art alone is not sufficient reasoning to combine teachings of prior art references. Prelim. Resp. 50. As Patent Owner states, analogous art is a threshold inquiry for combining prior art references. *Id.* at 51. After the Petition asserts the threshold inquiry has been met, it contends a POSITA would have been motivated to modify Plante's sample collection system by replacing Plante's knife for a safer design just as for Cho. Pet. 65 (citing Ex. 1002 ¶ 144). The Petition further states substituting Patterson's cap (having an annular valve) for Plante's cap (having a pierceable membrane) would eliminate Plante's sharp knife to release material stored in the reservoir and a POSITA would have had a reasonable expectation of success that such a substitution would provide the same desired functionality. *Id.* at 66.

Patent Owner asserts that the combination would eliminate Plante's design feature of "reduced parts and increased ease of use" because the "proposed substitutions add parts to Plante's design and/or increases the number of steps required to release the reagent from the cap" thus destroying Plante's basic objective. Prelim. Resp. 54–55 (including an unidentified figure with numbered parts attributed to Patterson). Patent Owner further contends a special feature of Plante's biological material collection device is "safe transmission of biological matter" and Patterson is not "designed for transport" because "the cap is intended to be immediately removed so that

the mixture can be consumed." *Id.* at 58–59. Patent Owner contends the Petition does not explain (1) why a POSITA would ignore Plante's design choices in favor of Patterson's increased parts and additional step of pushing down on the top after screwing on the cap and (2) how Patterson's cap would be sufficiently secure. *Id.* at 57, 59–60.

Patent Owner's argument that substituting Patterson's cap for Plante's cap increases the number of parts in Plante's sample collection system is not supported by the current record. Both Plante and Patterson disclose devices comprising a container and a cap to be screwed onto the container by an unskilled user to combine the materials in each component. Ex. 1003 ¶ 41 ("[A]n unskilled user preserves the saliva sample merely by screwing the cap to the receiving vessel together."); Ex. 1004, 50:5–8 ("If a user rotates the opening unit 630 clockwise . . . the opening unit 530 moves downward due to the interaction between the external thread 612b and the internal thread 634a. As a result, the state as shown in FIG. 45A is accomplished."); Pet. 50.

Even if Patterson's system is constructed from more parts than Plante's system and requires an additional step of pushing down the top after screwing on the cap, the Petition identifies a reason for modifying Plante with Patterson's valve, namely, to replace Plante's sharp knife in the interest of safety to the user. Pet. 65. "Under the correct analysis, any need or problem known in the field of endeavor at the time of invention and addressed by the patent can provide a reason for combining the elements in the manner claimed." *KSR Int'l Co. v. Teleflex Inc.*, 550 U.S. at 420. "The fact that the motivating benefit comes at the expense of another benefit, however, should not nullify its use as a basis to modify the disclosure of one

reference with the teachings of another. Instead, the benefits, both lost and gained, should be weighed against one another." *Winner Int'l Royalty Corp. v. Wang*, 202 F.3d at 1349 n. 8; *Medichem, S.A. v. Rolabo, S.L.*, 437 F.3d at 1165. In addition to the "Needlestick Safety and Prevention Act" that Petitioner cites to support a POSITA having the motivation to remove the sharp element in Plante's system, the '646 patent itself states as a benefit of the claimed design "improved safety for both the sample donor and the end user, since, for example, sharp objects are not included," suggesting that improving safety for sample donors and end users was a concern at the time of invention. Ex. 1001, 5:4–9; Pet. 65 (referring back to Pet. 30, citing Ex. 1015; Ex. 1002 ¶ 71).

Patent Owner's argument that substitution with Patterson's cap has not been shown to be sufficiently secure because Patterson's cap is intended to be immediately removed to consume the contents of the bottle is unavailing because Patterson's teachings are not limited to beverages. As noted above, Patterson states the use of mixing cap to introduce an additive have many applications including introducing "chemicals" to a container which appears to suggest a non-consumable mixture. Ex. 1005, 8:9–19. In addition, the Petition provides a basis to conclude that Patterson's threaded connection to screw a cap on a container is the same as that disclosed by Plante and the '646 patent. Pet. 70–71 (citing Ex. 1005, 4:19–26, 6:33–45; Ex. ¶ 158).

Upon review of the parties' arguments and supporting evidence, we determine that Petitioner demonstrates a reasonable likelihood that claim 1 would have been obvious over the combined disclosures of Plante and Patterson.

b. *Claims 3–8, 11, and 12*

Claims 3–8 and 12 depend from claim 1 and claim 11 depends from claim 3.

The Petition identifies the further limitations of claims 3–8, 11, and 12 in the disclosure of Plante and/or Patterson. Pet. 76–81.

Patent Owner does not address Petitioner's arguments with respect to claims 3–8, 11, and 12, beyond the arguments discussed above with respect to independent claim 1. Prelim. Resp. 14–62.

Upon review of the parties' arguments and supporting evidence, we determine that Petitioner demonstrates a reasonable likelihood that claims 3–8, 11, and 12 would have been obvious over the combined disclosures of Plante and Patterson.

4. Unpatentability over Plante, Patterson, and Maples

Petitioner asserts that claims 1, 3–8, 11, and 12 are unpatentable under 35 U.S.C. § 103(a) over the combination of Plante and Patterson as discussed above in further view of Maples's disclosure, namely to stabilize biological cells and tissues collected in prior art devices such a Plante as discussed above in connection with the further combination of Plante and Patterson, citing the Declaration of Dr. Vincent A. Fischetti for support. Pet. 81–82 (citing Ex. 1011 ¶¶ 27–37).

Because we determine that Petitioner demonstrates a reasonable likelihood that the subject matter of claims 1, 3–8, 11, and 12 would have been obvious over the teachings of Plante and Patterson, including Plante's disclosure of a "preserving fluid" for mixing with a biological sample, we need not consider the further combination with Maples. Ex. 1003 ¶ 41.

IV. CONCLUSION

For the reasons above, we determine that the information presented in the Petition establishes that there is a reasonable likelihood that Petitioner would prevail with respect to challenged claims 1, 3–8, 11, and 12 of the '646 patent. Having determined that the record establishes a reasonable likelihood that the Cho and Patterson prior art references are analogous art to the '646 patent at the institution stage, we invite the parties to address the analogous art issue at trial. At this juncture in the proceeding, we have not made a final determination with respect to the patentability of the challenged claims, or with respect to claim construction.

V. ORDER

For the foregoing reasons, it is

ORDERED that pursuant to 35 U.S.C. § 314(a), an *inter partes* review of claims 1, 3–8, 11, and 12 of the '646 patent is hereby instituted with respect to the grounds of unpatentability set forth in the Petition; and

FURTHER ORDERED that pursuant to 35 U.S.C. § 314(c) and 37 C.F.R. § 42.4, notice is hereby given of the institution of a trial; the trial will commence on the entry date of this Decision.

For PETITIONER:

Joseph F. Jennings
Ali S. Razai
Paul N. Conover
Benjamin B. Anger
KNOBBE MARTENS OLSON & BEAR, LLP
2JFJ@knobbe.com
2AZR@knobbe.com
2PNC@knobbe.com
2BBA@knobbe.com

For PATENT OWNER:

Brian M. Kramer
Desmond P. O'Sullivan
MORRISON & FOERSTER LLP
BMKramer@mofo.com
DOSullivan@mofo.com