Trials@uspto.gov
571-272-7822

Paper No. 49
Date: March 20, 2024

UNITED STATES PATENT AND TRADEMARK OFFICE

BEFORE THE PATENT TRIAL AND APPEAL BOARD

LIFE SPINE, INC.,
Petitioner,

v.

GLOBUS MEDICAL, INC.,
Patent Owner.

IPR2022-01434
Patent 8,845,731 B2

Before DEVON ZASTROW NEWMAN, CYNTHIA M. HARDMAN, and MICHAEL A. VALEK, *Administrative Patent Judges.*

HARDMAN, *Administrative Patent Judge*.

JUDGMENT
Final Written Decision
Determining Some Challenged Claims Unpatentable
Denying Patent Owner's Motion To Strike
35 U.S.C. § 318(a)

I. INTRODUCTION

This is a Final Written Decision in an *inter partes* review challenging the patentability of claims 1–15 of U.S. Patent No. 8,845,731 B2 ("the '731 patent," Ex. 1001). We have jurisdiction under 35 U.S.C. § 6.

Petitioner has the burden of proving unpatentability of the challenged claims by a preponderance of the evidence. 35 U.S.C. § 316(e). Having reviewed the parties' arguments and cited evidence, for the reasons we discuss below, we find that Petitioner has demonstrated by a preponderance of the evidence that claims 1–9 and 15 are unpatentable, but has not demonstrated by a preponderance of the evidence that claims 10–14 are unpatentable. Additionally, as we discuss below (*see infra* Section III), we deny Patent Owner's Motion to Strike.

A. Procedural History

Petitioner Life Spine, Inc. filed a Petition requesting *inter partes* review of claims 1–15 of the '731 patent. Paper 2 ("Pet."). Patent Owner Globus Medical, Inc. filed a Preliminary Response. Paper 9 ("Prelim. Resp."). With our authorization, Petitioner filed a Preliminary Reply and Patent Owner filed a Preliminary Sur-reply. Paper 10 ("Prelim. Reply"); Paper 11 ("Prelim. Sur-reply"). In view of the then-available record, we instituted an *inter partes* review. Paper 12 ("Inst. Dec.").

After institution, Patent Owner filed a Response to the Petition. Paper 21 ("PO Resp."). Petitioner filed a Reply. Paper 23 ("Pet. Reply"). Patent Owner filed a Sur-reply. Paper 39 ("PO Sur-reply"). Petitioner filed an authorized Sur-sur-reply. Paper 43 ("Pet. Sur-sur-reply").

Patent Owner filed a Motion to Strike, to which Petitioner filed an Opposition. Paper 33 ("Mot."); Paper 36 ("Opp.).

On December 14, 2023, we held an oral hearing, the transcript of which is of record. Paper 47 ("Tr.").

B. Real Parties in Interest

Petitioner and Patent Owner each identify themselves as the real party in interest. Paper 35 (Petitioner's Owner Updated Mandatory Notices), 1; Paper 8 (Patent Owner's Updated Mandatory Notices), 1.

C. Related Matters

The parties identify *Globus Medical, Inc. v. Life Spine, Inc.*, 1:21-cv-01445 (D. Del.), filed October 13, 2021, as involving the '731 patent. Paper 35, 1; Paper 8, 1. The parties also identify as related matters patent applications related to the '731 patent, i.e., 17/192,231, 17/409,079, 17/410,335, 17/589,029, and 17/931,913. Paper 35, 1; Paper 8, 1. Patent Owner also identifies related *inter partes* review proceedings, i.e., IPR2022-01435, IPR2022-01599, IPR2022-01600, and IPR2023-00041. Paper 8, 1.

D. The '731 Patent (Ex. 1001)

The '731 patent, titled "Expandable Fusion Device and Method of Installation Thereof," relates to an expandable device for insertion between adjacent vertebrae to facilitate fusion. Ex. 1001, code (54), 2:49–50. According to the Specification, a need exists for a fusion device that is "capable of being installed inside an intervertebral disc space at a minimum to no distraction height and . . . can maintain a normal distance between adjacent vertebral bodies when implanted." *Id.* at 1:44–48. The '731 patent purports to meet this need with a fusion device including first and second endplates and a central ramp capable of moving in a first direction to push the endplates outwardly into an expanded configuration. *Id.* at 1:56–60.

An exemplary device is depicted in Figure 50 of the ’731 patent, reproduced below.

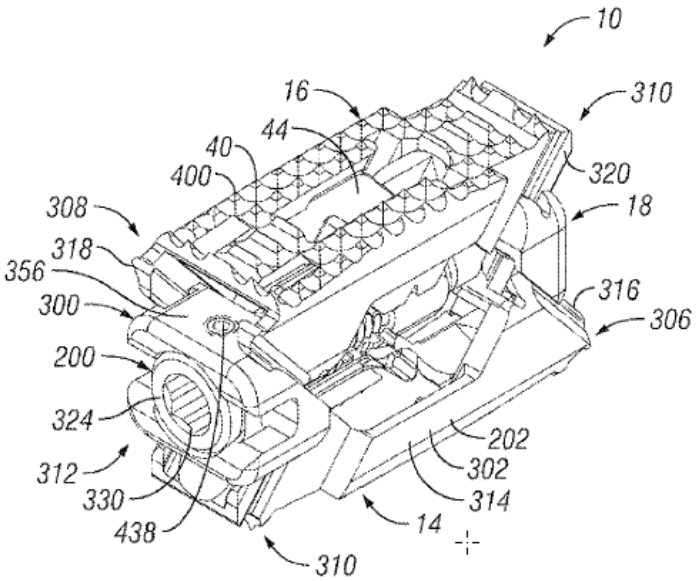

FIG. 50

Figure 50 is a perspective view of expandable fusion device 10 in an expanded position. *Id.* at 4:26–29, 16:20–21. Expandable fusion device 10 includes first endplate 14, second endplate 16, central ramp 18, actuator assembly 200, and driving ramp 300. *Id.* at 16:21–24. Actuator assembly 200 functions to pull central ramp 18 and driving ramp 300 together, which forces apart endplates 14 and 16. *Id.* at 16:24–28.

Figure 52 of the ’731 patent is reproduced below.

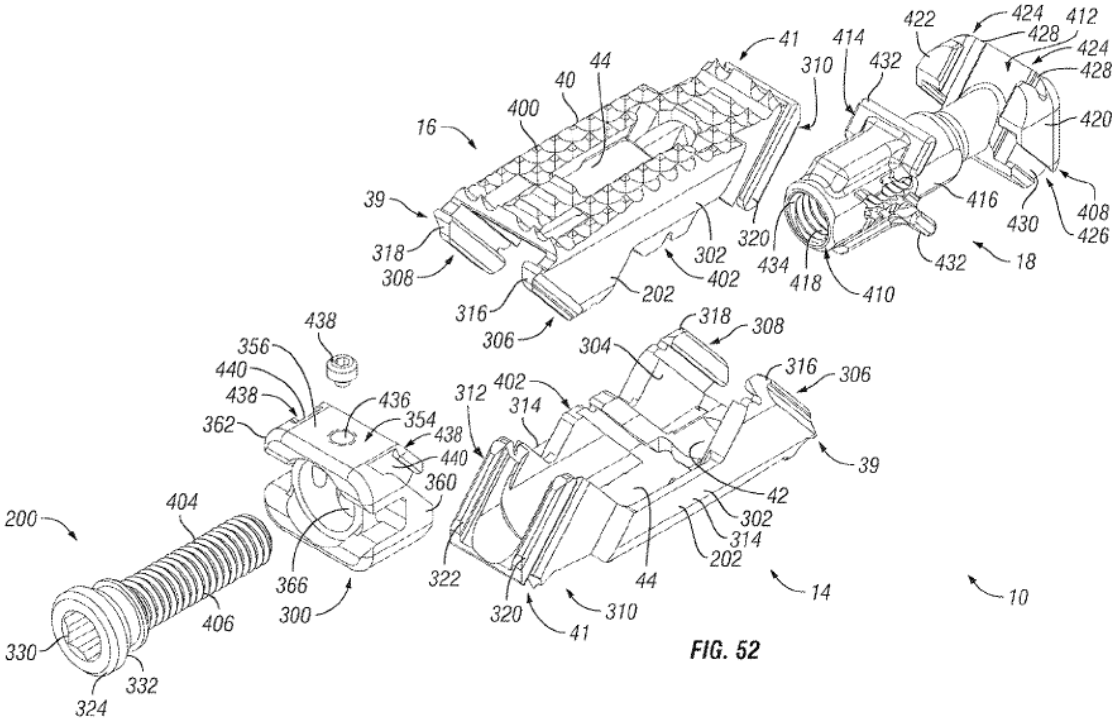

Figure 52 is an exploded view of expandable fusion device 10. *Id.* at 4:33–35. Central ramp 18, which has first end 408 and second end 410, includes first expansion portion 412, second expansion portion 414, rod-receiving extension 416, and longitudinally-extending through bore 418. *Id.* at 18:1–6. Rod-receiving extension 416 is threaded to receive threading of extension 404 of actuator assembly 200. *Id.* at 18:46–49. Driving ramp 300 includes bore 366 sized to receive extension 404. *Id.* at 18:55–57. Actuator assembly 200 includes head portion 324 with rim 332, which engages contact surface 368 of driving ramp 300. *Id.* at 18:61–64.

In operation, expandable fusion device 10 is seated into an intervertebral disc space. *Id.* at 19:22–24. An instrument is used to engage head portion 324 of actuator assembly 200. *Id.* at 19:38–40. Rotating actuator assembly 200 in a first direction pulls central ramp 18 linearly

towards driving ramp 300 and pushes driving ramp 300 linearly towards central ramp 18. *Id.* at 19:50–52, 20:4–8. Ramped portions of central ramp 18 and driving ramp 300 push against corresponding ramped portions of endplates 14 and 16, which forces the endplates outward into an expanded position. *Id.* at 19:50–55, 20:8–13.

E. Challenged Claims

Petitioner challenges all fifteen claims of the ’731 patent. Pet. 1. Claims 1, 10, and 15 are independent. Claim 1, reproduced below with bracketed lettering added,[1] is illustrative:

> 1. [pre] An intervertebral implant comprising:
>
> [a] a first endplate, wherein the first endplate includes a first side portion, the first side portion including a first ramped portion;
>
> [b] a second endplate, wherein the second endplate includes a second side portion, the second side portion including a second ramped portion;
>
> [c] a central ramp disposed between the first endplate and the second endplate;
>
> [d] a driving ramp disposed between the first endplate and the second endplate;
>
> [e] an actuation member coupled to the driving ramp and the central ramp;
>
> [f] wherein the central ramp is configured to move in a first direction and cause the first and second endplates to move outwardly and away from one another, and [g] the central ramp is configured to move in a second direction and cause the first and second endplate to move inward and towards one another,

[1] For ease of reference, we use the same bracketed lettering Petitioner uses in the Petition. *See* Pet. 7–21, 129.

> [h] wherein the central ramp comprises an expansion portion and an extension, the extension extending in a longitudinal axis from the expansion portion
>
> [i] wherein the first endplate and the second endplate are coupled to the expansion portion of the central ramp,
>
> [j] wherein the actuation member extends through an unthreaded opening in the driving ramp and extends into a threaded opening in the extension of the central ramp;
>
> [k] wherein when the actuation member is rotated the driving ramp is fixed with respect to the actuation member and the central ramp is moved in either the first direction or the second direction.

Ex. 1001, 20:36–21:21.

Independent claims 10 and 15 are similar to claim 1, but have a few notable differences. For example, unlike claim 1, claim 10 requires that the first and second ramped portions of the endplates "are complementary with one another." *Id.* at 22:24–26. Additionally, like claim 1, claims 10 and 15 require an "extension," but unlike claim 1 they do not require that the extension "extend[] in a longitudinal axis from the expansion portion." *Id.* at 22:14–50, 23:4–24:16.

Claims 2–9 depend directly or indirectly from independent claim 1 and recite additional features, including with respect to the first and/or second endplates (claims 2, 3), the central ramp (claims 4, 5, 7, 8), the driving ramp (claim 6), and the actuation member (claim 9). *Id.* at 21:22–22:12. Dependent claims 11–14 depend directly or indirectly from claim 10, and recite additional features, including with respect to the driving ramp (claims 11, 12) and the actuation member or actuation assembly (claim 13, 14). *Id.* at 22:51–23:3.

F. Asserted Grounds of Unpatentability

We instituted trial based on the following grounds of unpatentability:

Ground	Claim(s) Challenged	35 U.S.C. §[2]	Reference(s)/Basis
1	1–15	§ 102(b)	Chung[3]
2	1–15	§ 103(a)	Chung, Baynham[4]
3	1–15	§ 103(a)	Olmos[5], Chung
4	2–6, 10–14	§ 103(a)	Chung, Olmos, Baynham

Inst. Dec. 8, 57; Pet. 3. Petitioner supports its contentions with the Declaration and Reply Declaration of Troy D. Drewry (Exs. 1002,[6] 1036), and the Declaration of Paul Hatch (Ex. 1026), among other evidence. Patent Owner supports its contentions with the Declaration and Sur-reply

[2] The Leahy-Smith America Invents Act, Pub. L. No. 112-29, 125 Stat. 284 (2011) ("AIA"), amended several provisions of 35 U.S.C., including §§ 102 and 103. Petitioner asserts, and Patent Owner does not dispute, that "September 3, 2010 is the effective filing date." Pet. 4; *see generally* PO Resp.; *see also* Ex. 1001, code (22). Based on this effective filing date, the pre-AIA versions of 35 U.S.C. §§ 102 and 103 apply.

[3] Chung et al., KR 20-0290058, issued September 26, 2002 ("Chung," Ex. 1005). Exhibit 1005 includes a certified English translation on pages 1–12 and the original Korean-language document on pages 13–22. When citing Chung herein, we refer to the page numbers indicated by the six-digit page numbering scheme applied at the bottom center of the exhibit, but for convenience, we drop the lead-in zeros.

[4] Baynham et al., U.S. Patent Publication 2007/0270968 A1, published November 22, 2007 ("Baynham," Ex. 1007).

[5] Olmos et al., U.S. Patent Publication 2008/0140207 A1, published June 12, 2008 ("Olmos," Ex. 1006).

[6] Portions of Exhibit 1002 (namely, paragraphs 106, 133, 143, and 148) are under seal. *See* Inst. Dec. 56 (granting Petitioner's motion to seal). We do not cite the sealed paragraphs in this Decision.

Declaration of Brad Culbert (Exs. 2013, 2032), among other evidence. The record also contains a transcript of the deposition of Mr. Drewry based on his Reply Declaration (Ex. 2033), and transcripts of two depositions of Mr. Culbert, based on his Declaration and Sur-reply Declaration (Exs. 1041, 1091).

II. ANALYSIS

A. Principles of Law

"In an [inter partes review], the petitioner has the burden from the onset to show with particularity why the patent it challenges is unpatentable." *Harmonic Inc. v. Avid Tech., Inc.*, 815 F.3d 1356, 1363 (Fed. Cir. 2016); 37 C.F.R. § 42.104(b). This burden of persuasion never shifts to the patent owner. *See Dynamic Drinkware, LLC v. Nat'l Graphics, Inc.*, 800 F.3d 1375, 1378 (Fed. Cir. 2015) (discussing the burden of proof in *inter partes* review). To prevail, Petitioner must demonstrate unpatentability by a preponderance of the evidence. 35 U.S.C. § 316(e).

Anticipation under 35 U.S.C. § 102(b) requires that a prior art reference set forth each and every element of a claim, as set forth in the claim. *Verdegaal Bros. v. Union Oil Co.*, 814 F.2d 628, 631 (Fed. Cir. 1987); *see also Net MoneyIN, Inc. v. VeriSign, Inc.*, 545 F.3d 1359, 1371 (Fed. Cir. 2008) (anticipation not only requires that each element of a claim be present in a prior art reference, but also the "arrangement or combination" of those elements).

A claim is unpatentable as obvious under 35 U.S.C. § 103(a) if the differences between the claimed subject matter and the prior art are such that the subject matter, as a whole, would have been obvious at the time the invention was made to a person having ordinary skill in the art to which said

subject matter pertains. *See* 35 U.S.C. § 103(a) (2006); *see also KSR Int'l Co. v. Teleflex Inc.*, 550 U.S. 398, 406 (2007). The question of obviousness is resolved based on underlying factual determinations including: (1) the scope and content of the prior art; (2) any differences between the claimed subject matter and the prior art; (3) the level of ordinary skill in the art; and (4) any objective indicia of nonobviousness.[7] *Graham v. John Deere Co.*, 383 U.S. 1, 17–18 (1966). An obviousness determination requires finding a reason to combine the asserted prior art teachings, accompanied by a reasonable expectation of achieving what is claimed in the challenged patent. *See Intelligent Bio-Sys., Inc. v. Illumina Cambridge Ltd.*, 821 F.3d 1359, 1367 (Fed. Cir. 2016). "[A]ny need or problem known in the field of endeavor at the time of invention and addressed by the patent can provide a reason for combining the elements in the manner claimed." *KSR*, 550 U.S. at 419–20.

B. Level of Ordinary Skill in the Art

We consider the grounds of unpatentability in view of the understanding of a person of ordinary skill in the art as of September 3, 2010. *See Graham*, 383 U.S. at 17–18; *supra* 8 n.2. Petitioner contends that a person of ordinary skill in the art (sometimes abbreviated herein as "POSITA"):

> would have had a bachelor's degree in mechanical engineering or biomedical engineering and two or more years of experience in biomechanical engineering, biomedical engineering, and/or spinal implant devices. A person could also have qualified as a POSITA with some combination of more formal education

[7] Patent Owner does not assert objective indicia supporting nonobviousness of the challenged claims. *See generally* PO Resp.

> (e.g., an M.D.) and less technical experience or less formal education and more technical or professional experience in the foregoing fields, and would have had further appreciation of various technical concepts in this field, as explained by Prof. Drewry.

Pet. 5 (citing Ex. 1002 (Drewry Decl.) ¶¶ 30, 43–62). Patent Owner does not dispute Petitioner's proposal. *See* PO Resp. 9.

We adopt Petitioner's proposed level of ordinary skill in the art because it is consistent with the cited prior art and is undisputed on this record. *See Okajima v. Bourdeau*, 261 F.3d 1350, 1355 (Fed. Cir. 2001) (indicating that the prior art itself may reflect an appropriate skill level).

Based on their statements of qualifications and curricula vitae, we find that Petitioner's declarant Mr. Drewry, and Patent Owner's declarant Mr. Culbert, are each qualified to provide technical opinions from the perspective of a person of ordinary skill in the art in this proceeding. *See* Ex. 1002 (Drewry Decl.) ¶¶ 7–12 (Mr. Drewry's statement of qualifications); Ex. 1003 (Mr. Drewry's curriculum vitae); Ex. 2013 (Culbert Decl.) ¶¶ 3–9, 13–18 (Mr. Culbert's statement of qualifications); Ex. 2014 (Mr. Culbert's curriculum vitae).

Petitioner also relies on a Declaration from Mr. Hatch (Exhibit 1026), whose primary experience is in product and industrial design. *See* Ex. 1026 (Hatch Decl.) ¶ 6; *see also id.* ¶¶ 5–10, 13 (Mr. Hatch's statement of qualifications); Ex. 1027 (Mr. Hatch's curriculum vitae). Patent Owner does not dispute that Mr. Hatch is qualified to provide technical opinions from the perspective of a person of ordinary skill in the art in this proceeding. *See generally* PO Sur-Reply. At a minimum, on this record, we consider Mr. Hatch qualified to testify as an expert on issues with which he is "very

familiar," which relevant to this case are "the creation and interpretation of technical drawings used to illustrate and describe mechanical structures." Ex. 1026 (Hatch Decl.) ¶ 13.

C. Overview of Asserted Prior Art

1. Chung (Ex. 1005)

Chung, titled "A lumbar holder," relates "to a medical device for correcting the back." Ex. 1005, code (54), 2, 4. Chung discloses "a lumbar holder that is inserted between the back bones consisting of the lumbar in order to fix the back bones robustly while freely adjusting the height in order to maintain the appropriate space according to the patient's state." *Id.* at 4.

Figure 1 of Chung, reproduced below, is a perspective view of a lumbar holder.

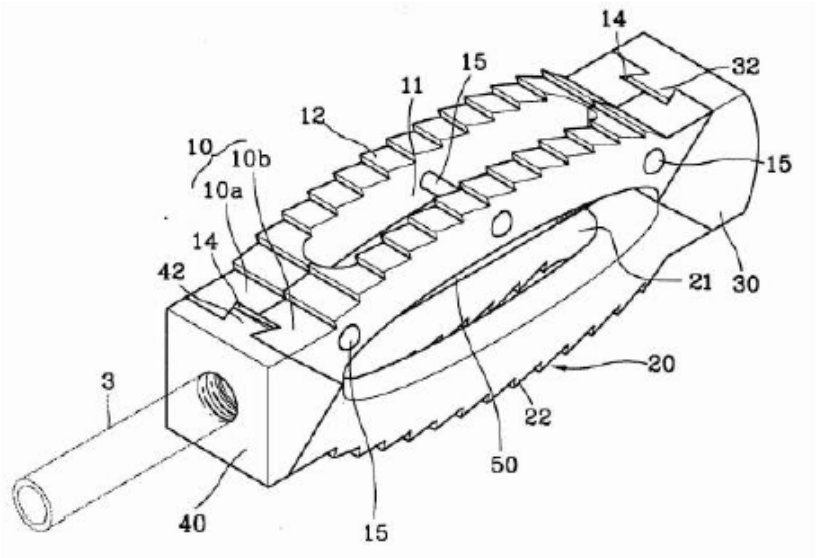

Id. at 3, 9. Figure 1 of Chung depicts main holder bodies 10 and 20, lead wedge 30, and opposing wedge 40. *Id.* at 6.

Figure 2 of Chung, reproduced below, is an exploded view of the lumbar holder in Figure 1 above.

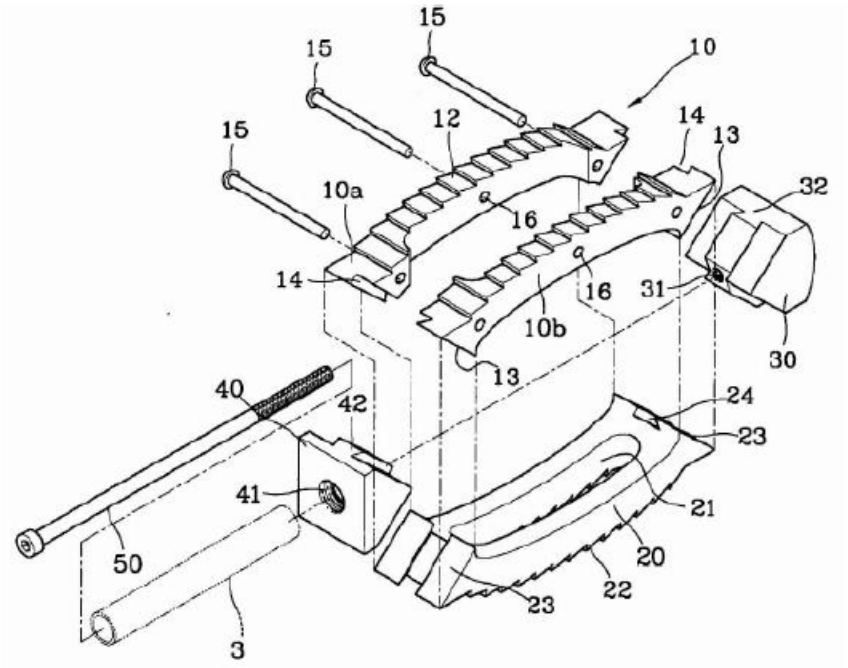

Id. at 3, 10. Figure 2 of Chung depicts groove fastening screw 50, which fastens to screw hole 31 of lead wedge 30. *Id.* at 6. Opposing wedge 40 has penetrating hole 41, which has a raised spot to hold the head of groove fastening screw 50. *Id.* at 7. Tightening or loosening groove fastening screw 50 adjusts the distance between lead wedge 30 and opposing wedge 40, which slide along guiding surfaces 13 and 23 of holder bodies 10 and 20 to widen or narrow the space between the holder bodies. *Id.* at 6–7.

Figure 4 of Chung is reproduced below.

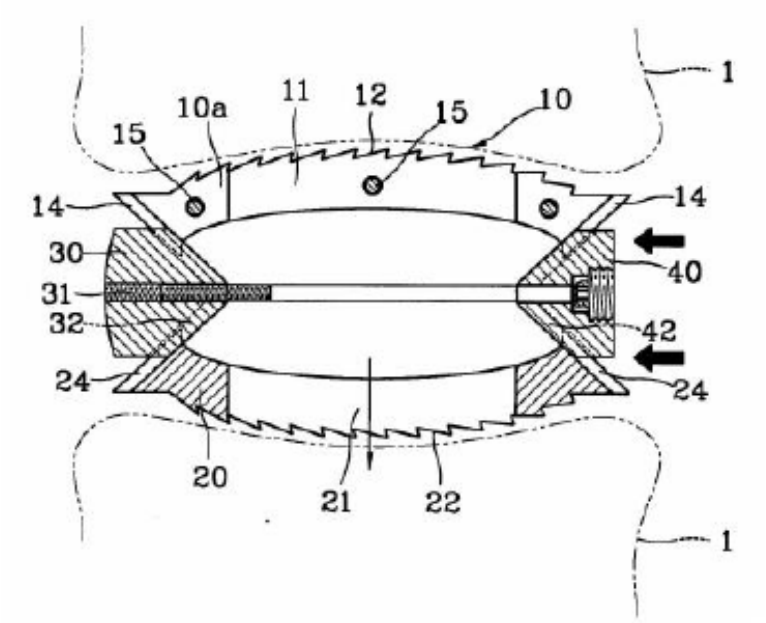

Id. at 10. Figure 4 of Chung is a cross-section view of a lumbar holder inserted between vertebrae. *Id.* at 3. Chung discloses that, in operation, the lumbar holder is inserted between vertebrae and a wrench is used to tighten groove fastening screw 50, which brings lead wedge 30 and opposing wedge 40 together such that the wedges push main holder bodies 10 and 20 outward into contact with the vertebrae. *Id.* at 7. Conversely, loosening groove fastening screw 50 moves lead wedge 30 and opposing wedge 40 apart, which pulls main holder bodies 10 and 20 together. *Id.*

2. Baynham (Ex. 1007)

Baynham, titled "PLIF Opposing Wedge Ramp," relates to "implants to be placed between vertebrae in the spine." Ex. 1007, codes (54), (57), ¶ 3. Figure 1 of Baynham is reproduced below.

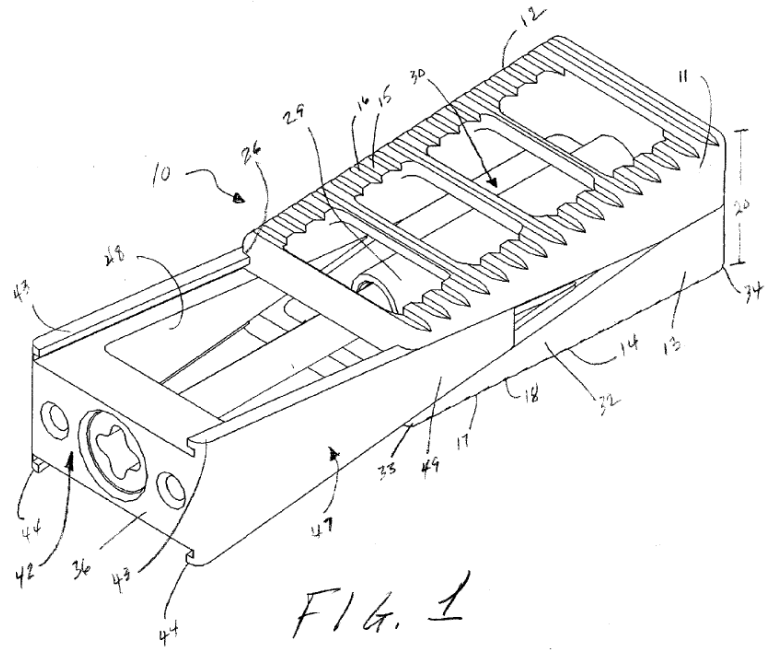

Figure 1 of Baynham is a perspective view of spinal fusion device 10 comprising upper section 11 with top surface 12 and lower section 13 with bottom surface 14. *Id.* ¶ 22. Distractor 42 is between upper section 11 and lower section 13. *Id.* ¶ 28.

Figure 3 of Baynham is reproduced below.

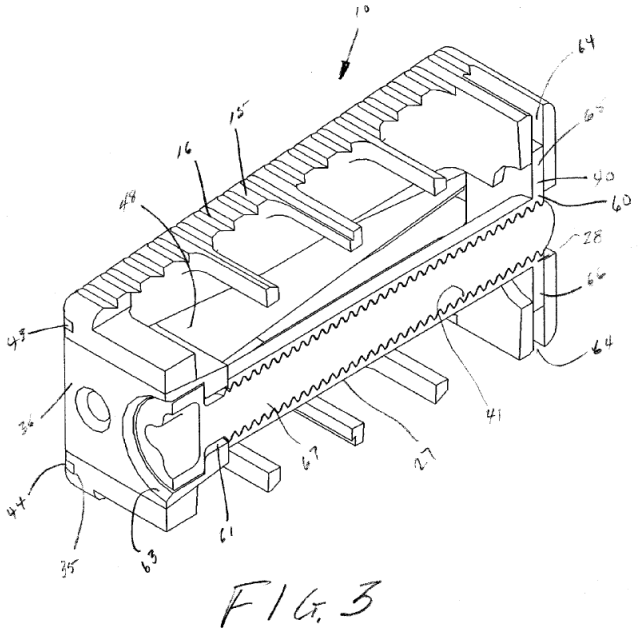

Figure 3 is a cross-section view of spinal fusion device 10 including jack screw 67, which is inserted through bore 61 of distractor 42. *Id.* ¶ 29. Jack screw 67 engages internal threads in tube 27 of link 40. *Id.* ¶ 25. Tightening jack screw 67 draws distractor 42 between the upper and lower sections 11 and 13, increasing the distance between sections. *Id.*

3. Olmos (Ex. 1006)

Olmos, titled "Intervertebral Implant," relates to "[a]n adjustable spinal fusion intervertebral implant." Ex. 1006, code (54), (57). Figure 16A of Olmos is reproduced below.

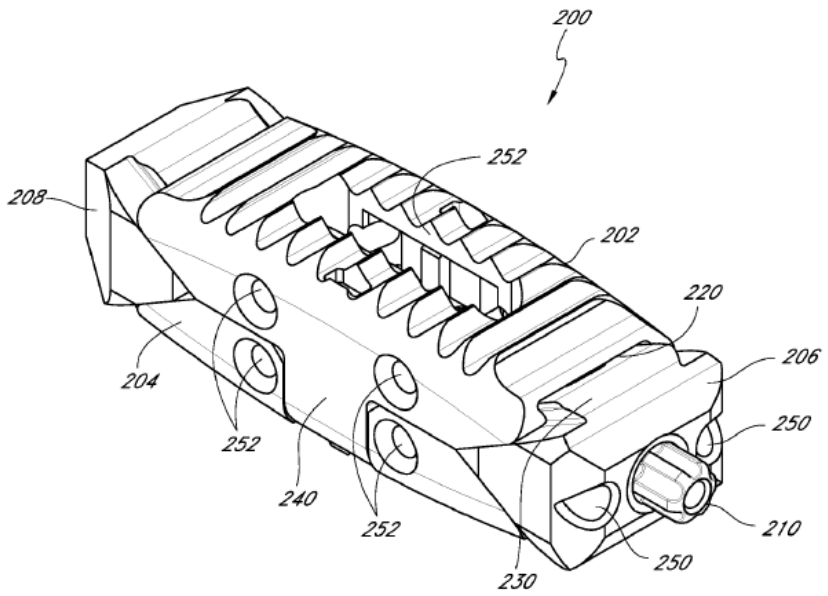

FIG. 16A

Figure 16A of Olmos is a perspective view of intervertebral implant 200 in an unexpanded state. *Id.* ¶ 152. Implant 200 comprises upper body portion 202, lower body portion 204, proximal wedge member 206, distal wedge member 208, and actuator shaft 210. *Id.* ¶¶ 152, 156. Proximal wedge member 206 includes upper guide member 230 engaging a corresponding

slot in upper body portion 202 to enhance stability. *Id.* ¶ 156; *see also id.* (describing that proximal wedge member 208 includes a similar feature).

Figure 18 of Olmos is reproduced below.

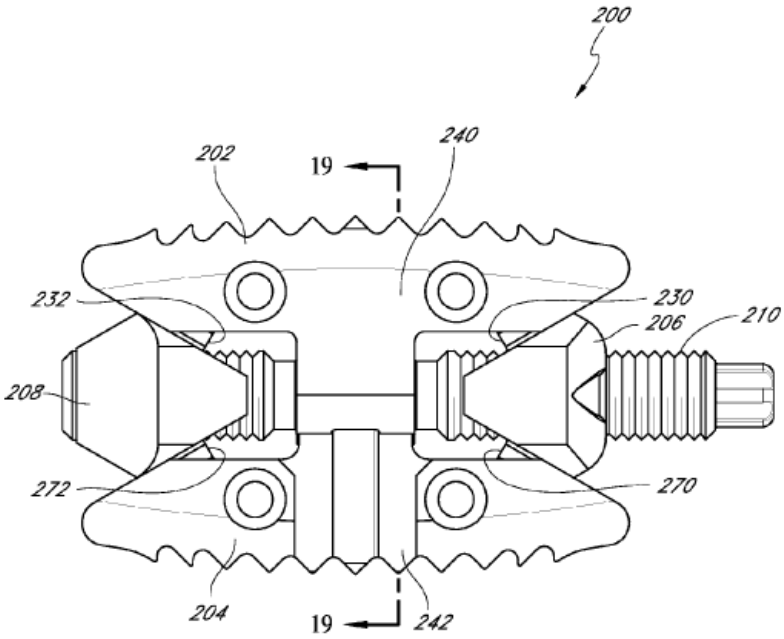

FIG. 18

Figure 18 of Olmos is a side view of intervertebral implant 200 in an expanded state. *Id.* ¶ 168. Actuator shaft 210 includes threads to engage at least one of the proximal and distal wedge members 206 and 208. *Id.* ¶ 159. Rotating actuator shaft 210 causes proximal and distal wedge members 206 and 208 to move towards each other and separate upper and lower body portions 202 and 204. *Id.* ¶ 155. Proximal wedge member 206 includes upper and lower guide members 230 and 270, and distal wedge member 208 includes upper and lower guide member 232 and 272. *Id.* ¶¶ 156, 167. Olmos discloses that the slots and guide members may have a dovetail shape to ensure secure engagement between the wedge members and the body portions. *Id.* ¶ 167.

D. Claim Construction

We interpret a claim "using the same claim construction standard that would be used to construe the claim in a civil action under 35 U.S.C. 282(b)." 37 C.F.R. § 42.100(b). Under this standard, we construe the claim "in accordance with the ordinary and customary meaning of such claim as understood by one of ordinary skill in the art and the prosecution history pertaining to the patent." *Id.*

"[T]he ordinary and customary meaning of a claim term is the meaning that the term would have to a person of ordinary skill in the art in question at the time of the invention," "after reading the entire patent" and its prosecution history. *Phillips v. AWH Corp.*, 415 F.3d 1303, 1313, 1321 (Fed. Cir. 2005) (en banc). "There are only two exceptions to this general rule: 1) when a patentee sets out a definition and acts as his own lexicographer, or 2) when the patentee disavows the full scope of the claim term either in the specification or during prosecution." *Thorner v. Sony Comput. Entm't Am. LLC*, 669 F.3d 1362, 1365 (Fed. Cir. 2012). Although extrinsic evidence including expert and inventor testimony, dictionaries, and learned treatises can be consulted to understand the meaning of a claim term, extrinsic evidence is less significant than the intrinsic record. *Phillips*, 415 F.3d at 1312–17. Usually, the specification is dispositive, and is the single best guide to the meaning of a disputed term. *Id.* at 1315.

In the Petition, Petitioner asserted that the claims do not "require constructions differing from their plain and ordinary meaning." Pet. 4. In its Preliminary Response, Patent Owner proposed constructions for the claim terms "extension," "expansion portion," and "complementary with one another." *See* Paper 9, 36–40, 41–47, 85–93.

In our Institution Decision, we provided preliminary constructions for the terms "extension," "expansion portion," and "complementary with one another." Inst. Dec. 16–20. After institution, the parties address only the construction of the terms "extension," "complementary with one another," and "fixed." *See* PO Resp. 10–16, 67–88; Pet. Reply 1–7. The parties do not dispute our construction of "expansion portion." *See generally* PO Resp.; Pet. Reply.[8]

We maintain our construction of the term "expansion portion" as meaning "a portion that facilitates expansion." *See* Inst. Dec. 17–18. Below we address the terms "extension," "complementary with one another," and "fixed." We determine that we need not construe any other claim term. *See Realtime Data, LLC v. Iancu*, 912 F.3d 1368, 1375 (Fed. Cir. 2019) ("The Board is required to construe 'only those terms . . . that are in controversy, and only to the extent necessary to resolve the controversy.'") (quoting *Vivid Techs., Inc. v. Am. Sci. & Eng'g, Inc.*, 200 F.3d 795, 803 (Fed. Cir. 1999)).

---

[8] Patent Owner asserts that Petitioner's Reply brief "grossly exceeds the scope of a proper reply" and "[t]he Board should decline to consider" it. PO Sur-reply 7. This generic objection to the entire Reply fails to provide adequate notice regarding which of Petitioner's theories and arguments Patent Owner contends are allegedly new and improper. *See, e.g.*, *Rembrandt Diagnostics, LP v. Alere, Inc.*, 76 F.4th 1376, 1383 (Fed. Cir. 2023) (rejecting generic objection to alleged new theories in reply as failing to provide adequate notice of which theories are allegedly new). Accordingly, we refuse Patent Owner's request that we "decline to consider" the entirety of the Reply. Where Patent Owner's Sur-reply raises more particularized complaints regarding Petitioner's allegedly improper new arguments, we address those complaints as appropriate below.

1. "extension" (Independent Claims 1, 10, 15)

Independent claims 1, 10, and 15 recite a central ramp that comprises an "extension." Ex. 1001, 22:9–11, 22:28–29, 24:1–2; *see also* Pet. 129 (limitation 1[h]), 132 (limitation 10[f]), 134 (limitation 15[g]). Prior to institution, Patent Owner argued that an "extension" is "a structure that increases the length of the central ramp." *See* Prelim. Resp. 16. Petitioner disputed Patent Owner's proposed construction, arguing that it "improperly read[s] limitations into the claims based on disclosed embodiments." Prelim. Reply 3.

In the Institution Decision, we agreed with Petitioner that Patent Owner's proposed construction improperly reads in limitations from example embodiments in the Specification. Inst. Dec. 16–17. We noted that the Specification uses the term "extension" to refer to a variety of additions to a main structure having a variety of shapes, not all of which "increase the length" of the main structure. *Id.* Accordingly, we preliminarily construed the term "extension" in accordance with its plain and ordinary meaning, i.e., "an addition to a main structure." *Id.* at 17.

Following institution, Patent Owner argues that our preliminary construction is inconsistent with the plain and ordinary meaning of the term "extension" in the context of the Specification and prosecution history. PO Resp. 10–11. Patent Owner acknowledges that the Specification uses the term "extension" in a variety of contexts—i.e., it refers to "a ***central ramp*** extension, an ***endplate*** extension, and an ***actuator*** extension"—but Patent Owner maintains that "[i]n the Specification, the only component of the ***central ramp*** identified as an 'extension' reduces the distance[] between the central ramp and driving ramp—i.e., it increases the length of the central

ramp." *Id.* at 11 (emphasis added). Patent Owner also argues that when the Examiner identified a central ramp "extension" in the prior art, the Examiner pointed to "various rod-like structures that increase length," thereby suggesting that the "Examiner recognized the difference between a *central ramp* extension and an *endplate* extension based on the Specification." *Id.* at 16.

Petitioner argues that the Board's preliminary construction of "extension" is correct in all contexts. Pet. Reply 1. According to Petitioner, the Specification "uses 'extension' to refer to a myriad of structures," and "[t]he Examiner applied 'extension' broadly to a variety of structures." *Id.* (citing Ex. 1001, 5:47–58, Fig. 10, 11:8–10, 11:40–42, Fig. 23, 9:40–45, 10:1–19, Fig. 24, claims 2, 3; Ex. 1004 (prosecution history), 42–44, 66–67, 126–27). According to Petitioner, Patent Owner "fails to justify why 'extension' should have a special meaning when used with the central ramp (e.g., Claim 1), but some different meaning when referring to an '*endplate* extension' (e.g., Claim 2) or '*actuator* extension.'" *Id.* at 2. Petitioner argues that Patent Owner's "narrowing construction based on specific embodiments should not be read into the claims." *Id.* (citing, e.g., *Hill-Rom Servs., Inc. v. Stryker Corp.*, 755 F.3d 1367, 1371 (Fed. Cir. 2014)).

We begin our analysis with the language of the claims. *See Phillips*, 415 F.3d at 1314 ("[T]he claims themselves provide substantial guidance as to the meaning of particular claim terms."). Independent claims 1, 10, and 15 recite the term "extension" in connection with identifying a portion of the central ramp. For example, limitation 15[g] recites: "wherein the ***central ramp comprises*** an expansion portion and ***an extension***, the extension extending from the expansion portion and having a threaded opening for

receiving the threaded portion of the actuation member." Pet. 134 (emphasis added). Limitations 1[h] and 10[f] recite similar language. *Id.* at 129–30.

Based on the language of the claims, we see little support for Patent Owner's proposed construction. Patent Owner's construction includes a directional or dimensional component—i.e., extending the "length" of the central ramp. Patent Owner, however, fails to explain—and we otherwise fail to discern—what it contends in the claim language indicates that the term "extension" carries a meaning of extending the "length" as opposed to some other dimension of the central ramp. Limitations 15[g] and 1[h] specifically recite that the extension "extend[s] from the expansion portion," but there is no directionality requirement indicating in which direction it must extend or what dimension it must extend (e.g., length, width, height). *See* Pet. 130, 134.

Claim limitation 1[h] is different in that it additionally recites "wherein the central ramp comprises an expansion portion and an extension, the ***extension extending in a longitudinal axis*** from the expansion portion." *Id.* at 129 (emphasis added). This additional language specifies a direction in which the extension must extend, but cannot be read into the term "extension" itself. *See, e.g.*, *Nystrom v. TREX Co., Inc.*, 424 F.3d 1136, 1143 (Fed. Cir. 2005) (explaining that where one claim recites a "wood decking board" and another a "board," this suggests that a "board" is not necessarily made of wood, because "[w]hen different words or phrases are used in separate claims, a difference in meaning is presumed"). In other words, the plain meaning of the term "extension" does not, on its own, carry a directionality requirement. Instead, claim limitation 1[h] carries a

directionality requirement based on the additional words in that claim (i.e., "extending in a longitudinal axis from the expansion portion").

This analysis is consistent with the language of dependent claims 2, 3, and 7. These claims recite endplates (not central ramps) that include extensions. For example, dependent claim 2 recites "***the first endplate and the second endplate each comprising*** . . . ***an extension*** that extends along at least a portion of the lower surface." Ex. 1001, 21:22–28 (emphasis added). Patent Owner's proposed construction of "extension" as "a structure that increases the length of the central ramp" is non-sensical in the context of these claims. Moreover, nothing in these claims suggests that the concept of lengthening is intrinsic to the term extension. Rather, like claim 1, claims 2 and 7 include separate language that speaks to the directionality of the extension. Specifically, claim 2 recites that the extension "extends *along* at least a portion of the lower surface," while claim 7 recites that the endplates each have an "extension *from a lower side*" of the endplate. *Id.* at 21:22–28, 21:60–64 (emphasis added).

Patent Owner seeks to disregard the use of the term "extension" in these other claims, because it is not related to the central ramp. *See, e.g.*, PO Resp. 11 (acknowledging that "the Specification discusses different types of extensions," but asserting that "[t]he claim term at issue focuses on the *central ramp* extension"). Claim terms, however, "cannot be interpreted differently in different claims," and "must be interpreted consistently in all claims." *Southwall Techs., Inc. v. Cardinal IG Co.*, 54 F.3d 1570, 1579 (Fed. Cir. 1995); Pet. Reply 2. Patent Owner has not persuasively demonstrated that a person of ordinary skill in the art would have understood the intrinsic record to provide one meaning of term "extension" specific to

the central ramp, and another meaning in context of the endplates or actuator. *See* Pet. Reply 2.

We next turn to the Specification. *See Phillips*, 415 F.3d at 1315 ("[C]laims must be read in view of the specification, of which they are a part.") (citations omitted). Patent Owner seeks to support its proposed construction by arguing (among other things) that "[i]n the Specification, the only component of the central ramp identified as an 'extension' reduces the distances between the central ramp and driving ramp—i.e., it increases the length of the central ramp." PO Resp. 11 (citing Ex. 2013 (Culbert Decl.) ¶ 60). To illustrate, Patent Owner provides annotated versions of Figures 52 (excerpt), 25, and 46 of the '731 patent, which we reproduce below.

'731 Patent, Fig. 52

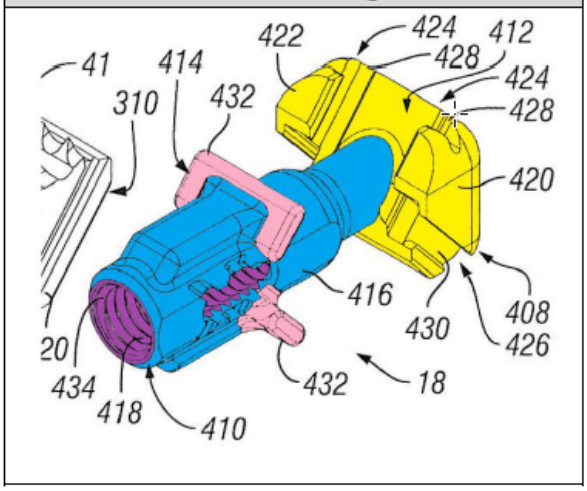

Figure 25 (Ex. 1001, 10:49-55, 11:16-18, 11:41-43, 12:1-6)	**Figure 46** (Ex. 1001, 13:67-14:12, 15:43-45)
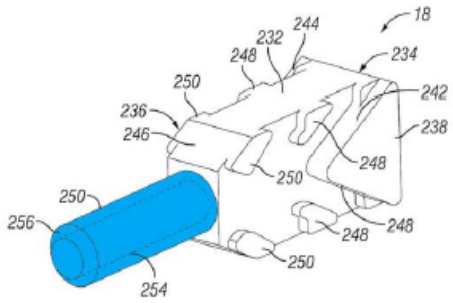	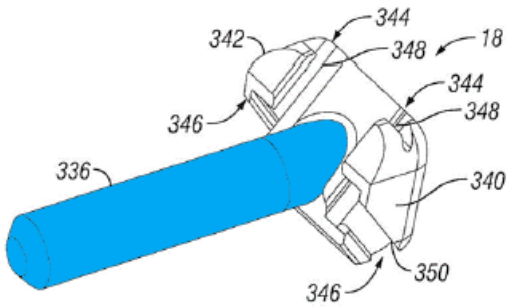

PO Resp. 11–12. These figures depict central ramps with extensions (blue). Mr. Culbert opines that in view of these Figures, "[a] POSITA would understand that the purpose of a central ramp extension is to lengthen the central ramp (i.e., 'extend' it), which allows the actuator to threadingly engage the actuator [sic] at a shorter distance," to "help[] ensure that the actuator does not protrude from the distal end of the central ramp." *Id.* ¶ 61; *see also* PO Resp. 12.

In reply, Petitioner correctly points out that the Specification uses the term "extension" to refer to a multitude of structures, not all of which extend the length of some other structure. *See* Pet. Reply 1; *see also* Ex. 1001, 5:47–58, Fig. 10 (element 46), 11:8–10, 40–42, Fig. 23 (elements 250, 254), 9:40–45, 10:1–19, Fig. 24 (elements 202, 204, and 224). As one example, we reproduce below Figure 24 of the '731 patent, with certain reference numerals highlighted in yellow.

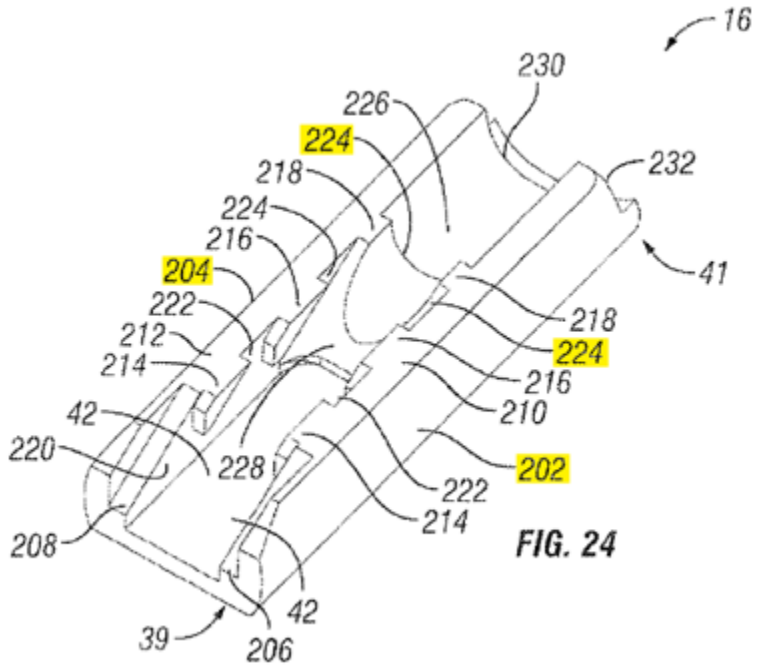

Figure 24 depicts endplate 16, wherein the lower surface 42 "includes a central extension 224 [highlighted in yellow]," and wherein "[t]he first and second side portions 202, 204 [highlighted in yellow] are extensions from the lower surface 42." Ex. 1001, 9:40–45, 10:1–3, Fig. 24. Extensions 202, 204, and 224 are additions to the main structure (the endplate), but they do not extend the length of the endplate.

Thus, based on the Specification, we agree with Petitioner that Patent Owner's construction improperly reads in limitations from the embodiments depicted in Figures 52, 25, and 46 of the '731 patent. *See* Pet. Reply 2; *see also Hill-Rom*, 755 F.3d at 1371 ("[T]his court has expressly rejected the contention that if a patent describes only a single embodiment, the claims of the patent must be construed as being limited to that embodiment.") (quoting *Liebel–Flarsheim Co. v. Medrad, Inc.*, 358 F.3d 898, 906 (Fed. Cir. 2004)). The Specification uses the term "extension" broadly to refer to a variety of structures, not merely to structures that "increase the length of the central

ramp" (or increase the length of some other structure). *See, e.g.*, Pet. Reply 1; Ex. 1001, 5:47–58, Fig. 10, 11:8–10, 11:40–42, Fig. 23, 9:40–45, 10:1–19, Fig. 24, claims 2, 3; Ex. 1004, 42–44, 66–67, 126–27.

Turning to the prosecution history, Patent Owner argues that "the Examiner repeatedly identified [an] alleged central ramp 'extension' of Olmos as various rod-like structures that increase length." PO Resp. 13 (citing Ex. 2013 (Culbert Decl.) ¶ 63; Ex. 1004 (prosecution history), 42, 48, 51, 56, 59–61, 64–66, 110, 120, 124, 125, 171–72, 183, 208, 237). The Examiner, however, also identified extensions of endplates that did not increase the length of the central ramp. *See, e.g.*, Ex. 1004 (prosecution history), 42–44, 66–67, 126–27. Patent Owner seeks to ignore these portions of the prosecution history because, in its view, they relate to endplate extensions, not central ramp extensions. *See* PO Resp. 13; Ex. 2013 (Culbert Decl.) ¶ 63. But like the claims and Specification, nothing in the prosecution history indicates that the applicant intended one definition for the term "extension" in the context of the central ramp and another in the context of other structures such as the endplate or actuator.

Patent Owner argues that our construction "leads to unreasonable results," because "virtually any portion of the expansion portion of the central ramp 18 could seemingly be identified as an 'extension.'" PO Resp. 13–14. We disagree. As Petitioner correctly notes, "the claims place further requirements on the central ramp extension (e.g., Claim 1's threaded opening), negating [Patent Owner's] complaint (POR, 13–14) that anything could be the claimed 'extension' as construed." Pet. Reply 2.

For the reasons above, we construe the term "extension" in accordance with its plain and ordinary meaning, i.e., "an addition to a main structure." *See* Ex. 3001 (Am. Heritage Dictionary), 4.

2. "complementary with one another" (Independent Claim 10)

The parties dispute the meaning of the term "complementary with one another," which is recited in independent claim 10. Ex. 1001, 22:24–26; *see also* Pet. 132 (limitation 10[e]). This term appears within a larger clause that reads: "wherein the first ramped portion of the first endplate and the second ramped portion of the second endplate are ***complementary with one another***." Ex. 1001, 22:24–26 (emphasis added).

Prior to institution, Patent Owner asserted that "complementary with one another" means "mating together in a beneficial way." Prelim. Resp. 86. Petitioner did not provide an express construction, but argued that the prosecution history evinces a "plain and ordinary meaning of this phrase" that "encompass[es]" ramps "having angles that mirror each other."[9] Pet. 44; Prelim. Reply 4–5. Based on the arguments and evidence presented prior to institution, we preliminarily construed "complementary with another" in accordance with its plain and ordinary meaning, i.e., "completing one another." *See* Inst. Dec. 20.

---

[9] For clarity, we explain what Petitioner means by ramps that have "angles that mirror each other." As Mr. Drewry explains, "complementary parts may provide a mirrored version of each other, such that placing the ramped portions over each other would yield the same angle relative to the common plane between them." Ex. 1002 (Drewry Decl.) ¶ 182. For an example of ramps "having angles that mirror each other," see Petitioner's contentions regarding Chung's ramped surfaces having mirrored angles. Pet. 45–46; Ex. 1002 (Drewry Decl.) ¶ 183.

In its Patent Owner Response, Patent Owner agrees with our preliminary construction. PO Resp. 9, 78.

Petitioner states that it "disagrees" with our preliminary construction, but does not propose an alternative construction. Pet. Reply 5; *see also* Tr. 26:9–21 (indicating that Petitioner did not offer an alternative construction). Instead, Petitioner again relies on the prosecution history to argue for a construction of "complementary with one another" that encompasses ramped surfaces having mirrored angles. Petitioner argues that "[t]he Examiner consistently explained that ramped surfaces having the same/mirrored angles of inclination satisfied this limitation," yet Patent Owner "never once objected or argued otherwise." Pet. Reply 6. Petitioner argues that "[t]he Board cannot overlook the importance of [Patent Owner's] silence in the face of the Examiner's repeated rejections and arguments," and thus, "the Examiner's interpretation should prevail." *Id.* at 6, 7.

Below we consider anew the construction of "complementary with one another," based on the full trial record.

We begin with the language of the claims. Independent claim 10 recites: "the first ramped portion of the first endplate and the second ramped portion of the second endplate are ***complementary with one another***." Ex. 1001, 22:24–26 (emphasis added). This is the only use of the term "complementary" in the claims of the '731 patent.

We find that the term indicates a relationship between the endplate ramp portions (i.e., the ramped portions are "complementary" "with one another"), but does not otherwise provide insight into the meaning of the term. There is no suggestion in the claim language that the term is accorded a special meaning in the context of the '731 patent.

We next turn to the Specification. It uses the term "complementary" only once, in describing texturing or engagement features on two endplates.[10] Specifically, in discussing a fusion device for insertion between two vertebral bodies, the Specification discloses device 10 as having endplates 14 and 16, which are generally planar, as well as "artificial endplates 100," which have a generally convex profile to achieve lordosis (inward curvature of the spine). Ex. 1001, 8:29–43. This device is depicted in Figure 17 of the '731 patent, which we reproduce below:

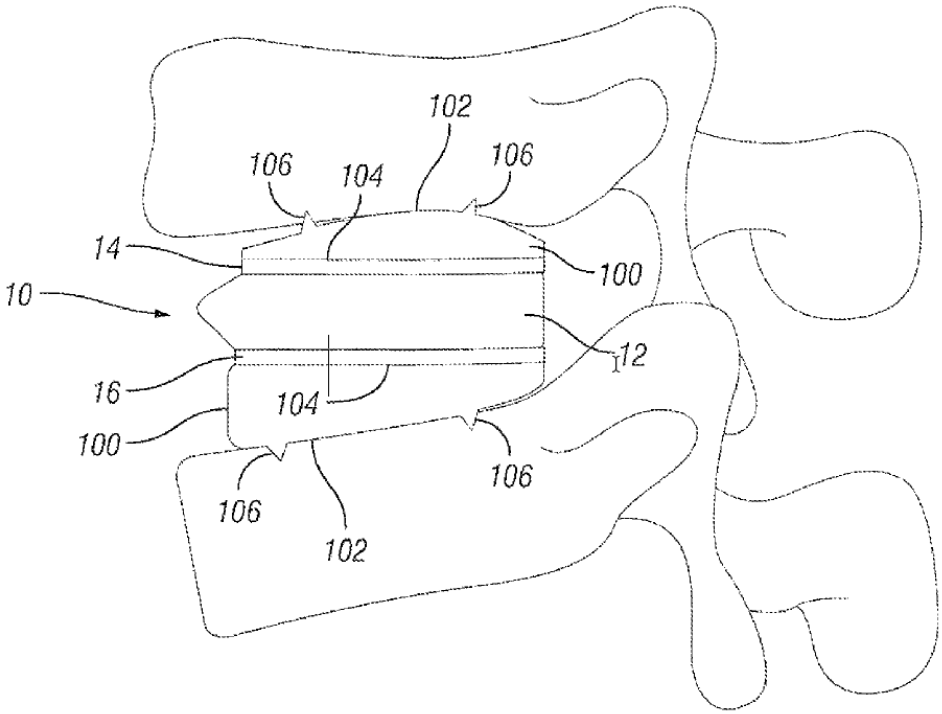

FIG. 17

[10] Patent Owner asserts that Figure 50 in the '731 patent additionally provides an example of side ramps that are "complementary with one another." PO Resp. 81. We do not rely on Figure 50 as informing the meaning of this claim term, because the Specification does not describe Figure 50 as depicting side ramps that are "complementary with one another."

Figure 17 depicts fusion device 10 inserted between two vertebral bodies. The Specification states that "the artificial endplates 100 have an upper surface 102 and a lower surface 104," where "[t]he lower surfaces 104 have ***complementary*** texturing or engagement features on their surfaces to engage with the texturing or engagement features on the upper endplate 14 and the lower endplate 16 of the fusion device 10." *Id.* (emphasis added).

Petitioner argues that "[t]he '731 patent does not explain what makes elements 'complementary with one another.'" Pet. 45. We disagree. Although the Specification does not define the term "complementary," it provides an example of complementary features, i.e., texturing or engagement features on one surface that engage with corresponding features on another surface. *See* Ex. 1001, 8:36–40; *see also id.* at 6:26–28 ("texturing can include teeth, ridges, friction increasing elements, keels, or gripping or purchasing projections"). This example is consistent with the plain and ordinary meaning of the term complementary, which is "completing one another." PO Resp. 79–80.

We next turn to the prosecution history. As Patent Owner correctly explains, "[b]efore the 'complementary' limitation was added via amendment, the Examiner identified an alleged first ramped portion of the first endplate ('first ramped surface') and second ramped portion of the second endplate ('second ramped surface)" in Olmos, as shown in the Examiner's annotated versions of Olmos's Figures 21A and 20A, reproduced below:

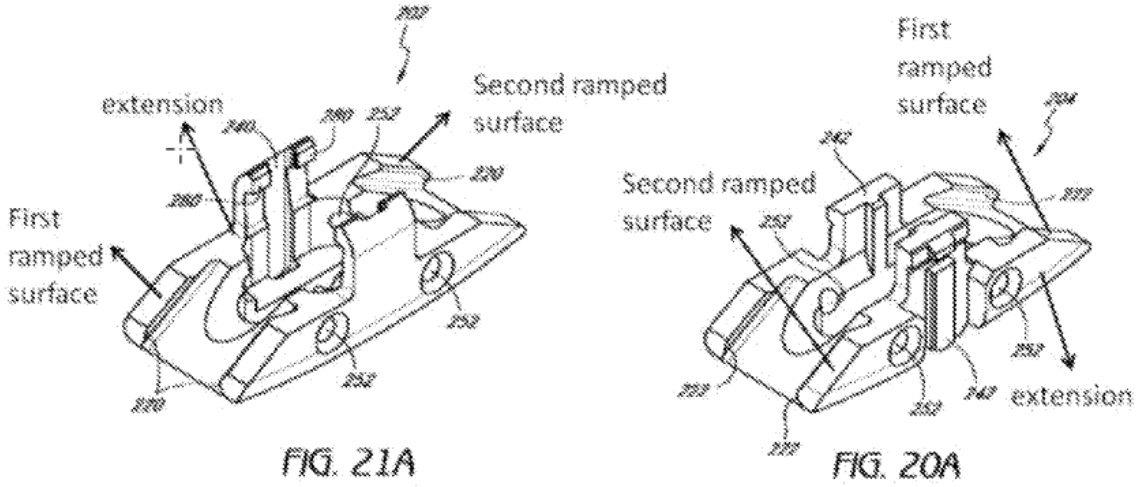

PO Resp. 82–83 (citing Ex. 1004 (prosecution history), 264). Olmos's Figure 21A (left) and Figure 20A (right) respectively show an upper and lower body portion of an intervertebral implant. Ex. 1006 (Olmos) ¶¶ 56, 58. The Examiner mapped a ramped portion on each of the upper and lower body portions as a "first ramped surface," and a second ramped portion on each of the upper and lower body portions as a "second ramped surface."[11] *See* Ex. 1004 (prosecution history), 263–64.

In response to the Examiner's rejection, the applicant added a claim limitation reciting that "the first ramped portion of the first endplate and the second ramped portion of the second endplate are *complementary with one another*," and argued that this amendment covers "the embodiment illustrated in FIG. 40 of the present application." *Id.* at 251. We reproduce below Figure 40 of the '731 patent:

[11] Although not depicted in the Examiner's annotated figures or expressly noted by the Examiner, if these body portions were assembled into an implant device, the cited first and second ramped portions would mirror each other across a horizontal plane.

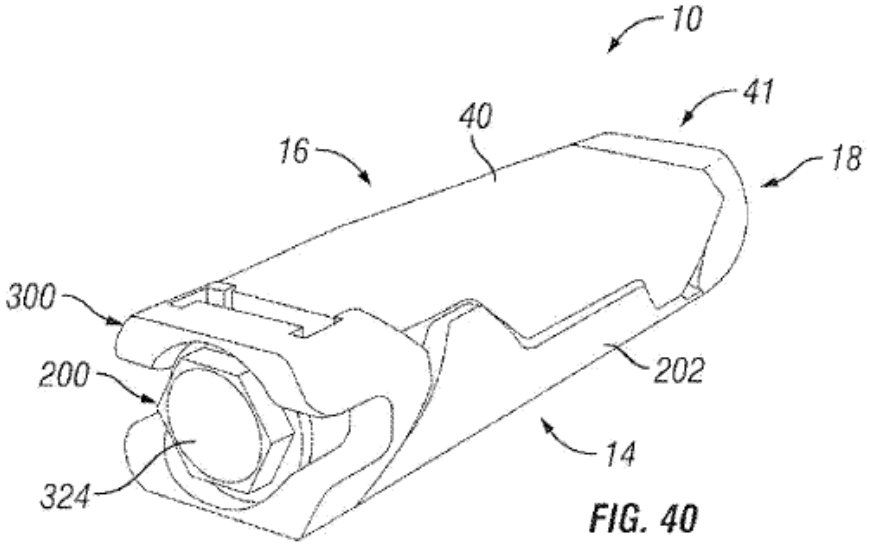

FIG. 40

Figure 40 "is a rear perspective view of an alternative embodiment of an expandable fusion device shown in an unexpanded position." Ex. 1001, 4:1–4. The applicant concluded that the "complementary with one another" language distinguished Olmos's ramped surfaces having mirrored angles. Ex. 1004 (prosecution history), 251.

Despite the applicant's arguments and amendment, the Examiner continued to reject the claims over Olmos. The Examiner found that in Olmos's device, "the first and second endplates have ramped portions that have the same incline" (i.e., are mirrored). *Id.* at 238–39. The Examiner also stated that "one can orient the first and second ramped portions such that they are complimentary [sic] with each other," as shown in the Examiner's annotated figure from Olmos, reproduced below:

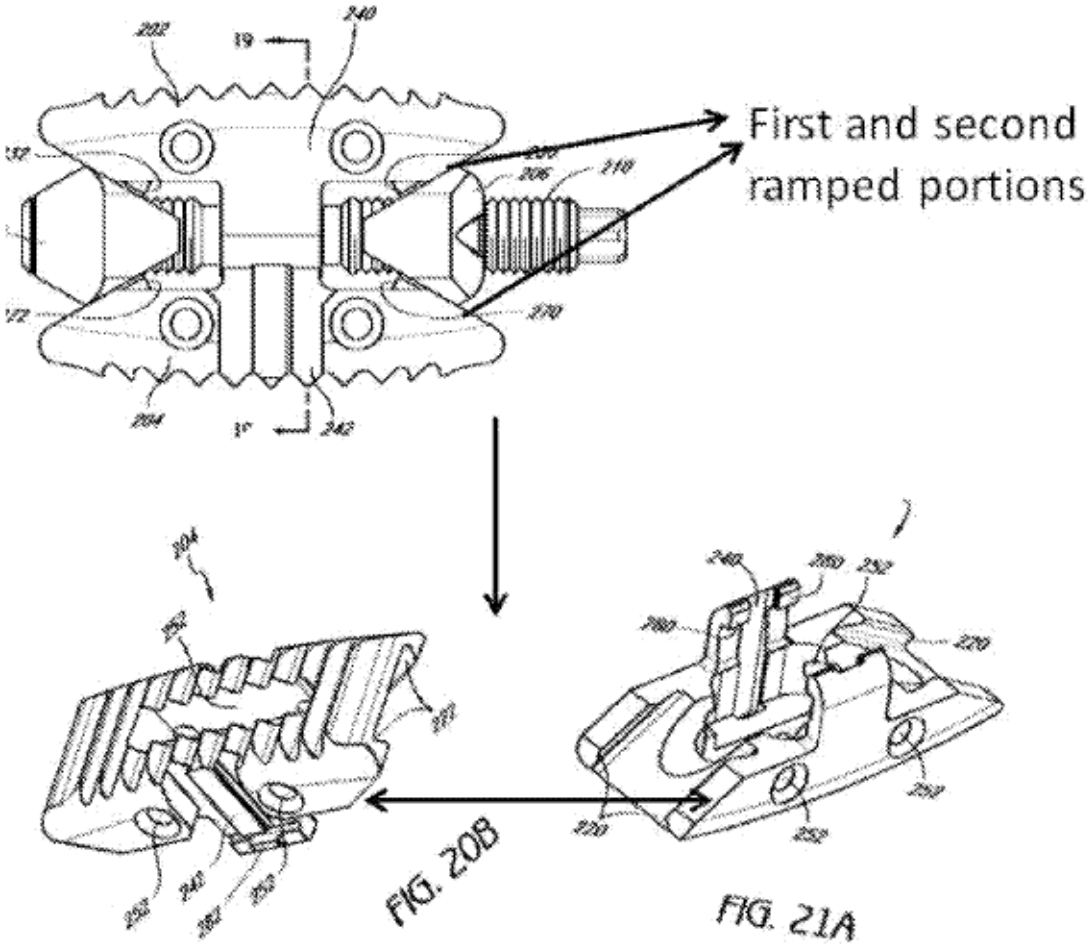

Ex. 1004 (prosecution history), 239. The above figures show Olmos's assembled device, with arrows pointing to the first and second ramped portions of the endplates (which are mirrored). The figure then shows that if the device is disassembled, the endplates can be rearranged such that the first and second ramped portions can be placed over one another. *Id.*

The Examiner also rejected the claims over Biederman (US 6,176,882), finding that it taught an intervertebral implant having ramps that meet the "complementary with one another" limitation. *Id.* at 220–21, 239. Specifically, the Examiner cited ramps 63 and 63' in the following figures from Biederman:

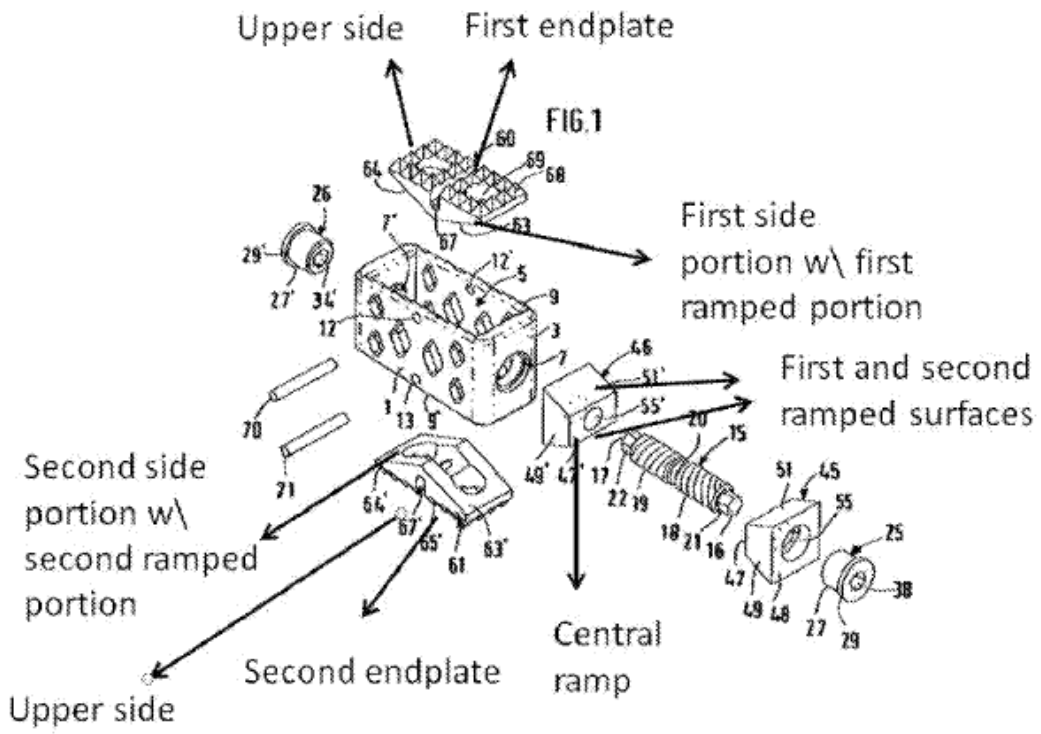

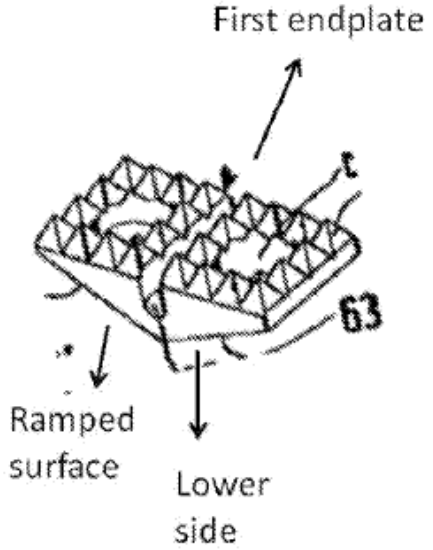

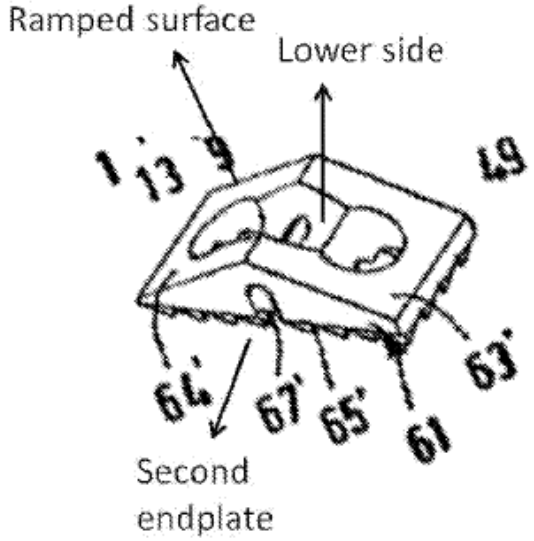

Ex. 1004 (prosecution history), 222. The above figures show Biederman's intervertebral implant, with labels calling out (among other structures) ramps 63 and 63' on the first and second endplate, respectively. *See id.* The

Examiner asserted that "the first and second ramped portions are complimentary [sic] with each other, wherein the angle of inclinations are the same." *Id.* at 220–21, 239. In other words, the Examiner posited that if Biederman's implant were disassembled, the endplates could be rearranged such that the first and second ramped portions can be placed over one another.

In response, the applicant initially deleted the "complementary with one another" limitation from the claims, but later re-added this limitation back to independent claim 17 (which issued as claim 10). *See* Ex. 1004 (prosecution history), 193, 195–97, 146–47.[12] The Examiner continued to reject the claims, repeating the same arguments that Biederman and Olmos disclose ramps that are "complementary with one another." *See id.* at 103, 113–14, 133 (August 21, 2013, Office Action), 53–54, 58, 73 (January 15, 2014, Office Action).

The applicant did not specifically address the "complementary with one another" limitation in the two amendments it submitted prior to the '731 patent issuing; it instead focused on other claim amendments and arguments. *See generally id.* at 85–96 (December 23, 2013, Amendment), 18– (April 22, 2014, Amendment). These amendments, however, included the following language under a heading titled "No disclaimers or disavowals":

---

[12] For clarity, we note that although the applicant re-added the "complementary with one another" limitation to independent claim 17 in an amendment dated July 29, 2013, this addition is not immediately apparent from the amendment, because the applicant did not mark the language as an addition. *See* Ex. 1004 (prosecution history), 146–47 (adding limitation), 100–01 (Examiner noting that the applicant did not mark the added language with underlining, per the guidelines for marking up claim amendments).

> Although the present communication may include alterations to the application or claims, or characterizations of claim scope or referenced art, Applicants are not conceding in this application that previously pending claims are not patentable over the cited references. Rather, any alterations or characterizations are being made to facilitate expeditious prosecution of this application.

Ex. 1004 (prosecution history), 95, 26–27.

We analyze this prosecution history in our discussion immediately below.

The parties agree that the term "complementary with one another" has a plain and ordinary meaning. *See* Pet. 45 (arguing that "the plain and ordinary meaning of this phrase" encompasses mirrored surfaces); PO Resp. 78 (arguing that Petitioner's interpretation "as encompassing mirrored surfaces is unreasonably broad and inconsistent with the plain and ordinary meaning"). In other words, neither party argues that the applicant acted as its own lexicographer in giving this term a specialized meaning. Nor does either party argue that the patentee disavowed claim scope during prosecution.[13] Accordingly, our task is to discern the plain and ordinary meaning of "complementary with one another." *See Hill-Rom*, 755 F.3d at 1371 ("We depart from the plain and ordinary meaning of claim terms based on the specification in only two instances: lexicography and disavowal.").

[13] Although Petitioner argues that Patent Owner is attempting a "*post-facto* disclaimer" by advancing a narrower interpretation here than the Examiner applied, Petitioner does not argue that the applicant disclaimed claim scope during prosecution. Pet. Reply 6–7; *see also id.* at 21 (arguing that Patent Owner "avoided . . . a disavowal throughout prosecution").

As noted above, the Specification gives an example of the term "complementary," but does not provide an express definition for the term. Accordingly, we find a general purpose dictionary informative in articulating the plain and ordinary meaning of this term. "A court may look to extrinsic evidence so long as the extrinsic evidence does not contradict the meaning otherwise apparent from the intrinsic record." *Helmsderfer v. Bobrick Washroom Equip., Inc.*, 527 F.3d 1379, 1382 (Fed. Cir. 2008). As indicated in our Institution Decision, a general purpose dictionary defines "complementary" as "completing." *See* Inst. Dec. 20; Ex. 3001 (Am. Heritage Dictionary), 3 (defining "complementary" as "[f]orming or serving as a complement; completing"). We preliminarily construed "complementary with one another" to mean "completing one another." *See* Inst. Dec. 20.

Patent Owner agrees with our preliminary construction. PO Resp. 9. Petitioner, however, suggests that the plain and ordinary meaning of "completing one another" is actually broader than our preliminary construction, given that this construction excludes mirrored surfaces, yet the Examiner understood the term to include such surfaces. *See* Pet. Reply 6–7 (arguing that in accepting our preliminary construction, Patent Owner "is attempting a *post-facto* disclaimer in advancing a narrower interpretation than that repeatedly applied but never objected to during prosecution"). According to Petitioner, "[a]ny interpretation of 'complementary' should account for [the applicant's] silence and follow the Examiner's understanding." Pet. Reply 6–7.

We disagree with Petitioner's singular reliance on the prosecution history as allegedly indicating the plain and ordinary meaning of

"complementary with one another." Petitioner's argument is based on an assumption that the Examiner was using the plain and ordinary meaning of the term, but Petitioner points to no persuasive evidence of record to support that assumption. For example, aside from the Examiner's rejections, Petitioner does not point to any intrinsic or extrinsic evidence that uses the term "complementary" to encompass ramped portions having angles that mirror each other.

Patent Owner, in contrast, points to the Specification's description of "complementary texturing or engagement features," which are designed to "engage with" corresponding texturing or engagement features. PO Resp. 79–80 (citing Ex. 1001, 8:34–50); Ex. 2013 (Culbert Decl.) ¶ 167. The Specification is consistent with a plain meaning of "complementary" as indicating "completing," but does not support a plain meaning that encompasses ramped portions having angles that mirror each other.

Patent Owner also demonstrates that Figure 40 of the '731 patent, which the applicant cited as written description support when it added the "complementary with one another" limitation, is consistent with our preliminary construction. We reproduce below Patent Owner's annotated version of Figure 40:

Patent Owner Annotated
('731 Patent, Figure 40)

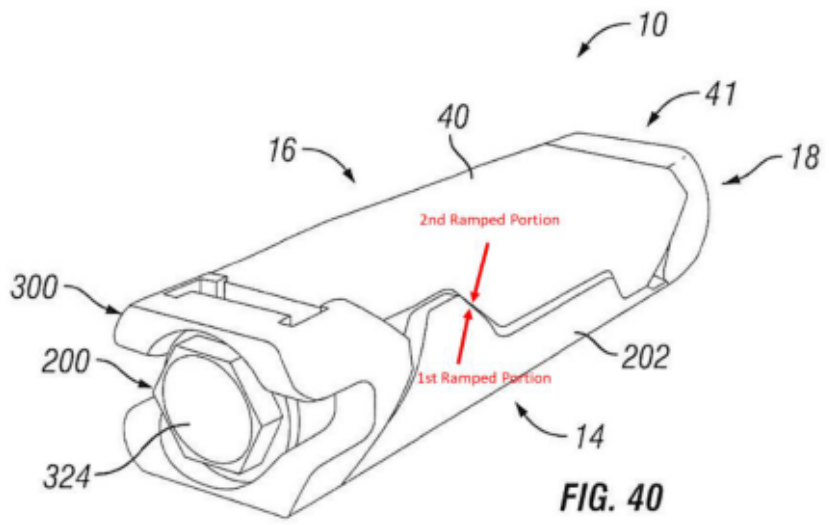

PO Resp. 82. Figure 40 of the '731 patent depicts "an expandable fusion device shown in an unexpanded position." Ex. 1001, 4:1–4. Patent Owner annotates this figure to identify first and second ramped portions of the device's endplates that fit over one another along at least a portion of their lengths. This Figure does not support a plain meaning that encompasses ramped portions having angles that mirror each other.

Patent Owner also points to other art of record that uses the term "complementary" to describe structures that complete one another. PO Resp. 80–81; Ex. 2013 (Culbert Decl.) ¶ 168. For example, Olmos discusses "complementary" retention structures that engage each other, and a spline "for cooperating with a complementary keyway." Ex. 1006 (Olmos) ¶¶ 88, 89. Baynham discusses "upper and lower sections" of a spinal fusion device that "move along the complementary inclined plane to . . . increase

the distance between the end plates of the adjacent vertebrae" when the surgeon turns a jack screw to expand the device. Ex. 1007 (Baynham) ¶ 30. Christensen (US 8,906,095 B2) describes the profile of columnar body of a fusion device as being generally complementary to the profile of the inter-vertebral elements of the disc implant. Ex. 1016 (Christensen), 24:14–27. As Mr. Culbert explains, "[e]ach use of 'complementary' in these exhibits refers to improving the physical engagement between two things by having them complete one another." Ex. 2013 (Culbert Decl.) ¶ 168. Accordingly, these references are also consistent with a plain meaning of "complementary" as indicating "completing," but do not support a plain meaning that encompasses ramped portions having angles that mirror each other.

Turning back to the prosecution history, we agree with Patent Owner that the applicant "specifically added the disputed claim language to the claims to exclude the 'mirrored' ramp surfaces identified by the Examiner (and now Petitioner)." PO Resp. 84. The Examiner then resorted to identifying hypothetical orientations of Olmos's and Biederman's end plates in order to map them to the "complementary with one another" limitation. *See, e.g.*, Ex. 1004 (prosecution history), 220–22, 238–39; *see also* Ex. 2013 (Culbert Decl.) ¶¶ 166–67. In other words, the Examiner's rejections were based on taking devices with ramped surfaces that have mirrored angles, disassembling them, and then reorienting the ramps to fit over one another. We agree with Mr. Culbert that ramped portions having mirrored angles "cannot complete one another absent reorienting them in a manner inconsistent with their orientation in the assembled implant," which is "simply impractical." Ex. 2013 (Culbert Decl.) ¶¶ 166, 177; PO Resp. 79.

We find that the Examiner's view that ramps that mirror each other are "complementary with one another," or that can be reoriented to be "complementary with one another, at best comports with the "broadest reasonable interpretation" standard the Examiner was required to apply, but does not comport with the *Phillips* claim construction standard applicable here. PO Resp. 85; *see also* Inst. Dec. 42. In continuing to press its claim construction based on the prosecution history, Petitioner fails to address or account for this important distinction (i.e., broadest reasonable interpretation versus *Phillips*).

Finally, we address Petitioner's suggestion that the applicant acquiesced to a broader interpretation of "complementary with one another" that encompasses ramped surfaces having mirrored angles because the applicant did not specifically dispute the Examiner's repeated mapping of such ramps to the "complementary with one another" claim limitation. *See* Pet. Reply 6. We find that Petitioner mischaracterizes the prosecution history, because the applicant was not "silent" in response to the Examiner's mappings.[14] *See* PO Sur-reply 8–9.

---

[14] Even if the applicant were silent, our reviewing court has explained that "[a] patentee is not required to fight tooth and nail every possibly adverse thought an examiner commits to paper, nor to advance redundant arguments for patentability." *TorPharm, Inc. v. Ranbaxy Pharms., Inc.*, 336 F.3d 1322, 1330 (Fed. Cir. 2003). Thus, while what an applicant chooses to dispute may be pertinent to claim construction, e.g., where the applicant lets stand the examiner's restrictive interpretation of a claim term, it does not follow that the scope of a term should be expanded to read on prior art simply because an applicant did not specifically object to an examiner's mapping of that term during prosecution.

First, upon adding the "complementary with one another" limitation to the claims, the applicant expressly stated that Olmos—which discloses only ramped surfaces having mirrored angles of inclination—does not disclose the limitation. *See* Ex. 1004 (prosecution history), 251. We agree with Patent Owner that this put skilled artisans "on notice that [Patent Owner] did not consider Olmos to disclose it." PO Sur-reply 9 (citing). Second, although the applicant did not specifically dispute the Examiner's subsequent identifications of allegedly "complementary" ramps in Olmos and Biederman and instead focused on other aspects of the claims that it argued distinguished over the prior art, the applicant stated that it was "not conceding in this application that previously pending claims are not patentable over the cited references," and that claim amendments were "made to facilitate expeditious prosecution" and were not a "disclaimer[] or disavowal[]." Ex. 1004 (prosecution history), 95; *see also id.* at 26–27, 200; PO Sur-reply 8–9. Finally, we agree with Patent Owner that Petitioner identifies no precedent where a patentee was found to disclaim the plain and ordinary meaning of a claim term based on an alleged acquiescence to a broader meaning ascertained from an examiner's application of prior art to the claimed. *See* PO Sur-reply 9.

In sum, based on the intrinsic and extrinsic evidence of record and consistent with *Philips*, we find that the plain and ordinary meaning of the term "complementary with one another" means "completing one another." Petitioner does not persuade us that the prosecution history demonstrates that the plain and ordinary meaning of this claim term must encompass surfaces that have angles that mirror one other.

3. "fixed" (Independent Claims 1, 10, 15)

The term "fixed" is recited in independent claim 1, 10, and 15. *See* Ex. 1001, 21:18–21, 22:42–50, 24:13–16; *see also* Pet. 129 (limitation 1[k]), 132 (limitation 10[j]), 134 (limitation 15[k]). This term appears within a larger clause that differs somewhat between the independent claims, but for purposes of claim construction, the clause in claim 1 is representative. It reads: "wherein when the actuation member is rotated the driving ramp is ***fixed*** with respect to the actuation member and the central ramp is moved in either the first direction or the second direction." Ex. 1001, 21:18–21 (emphasis added).

Patent Owner argues that "[i]n the context of spinal fusion implants, a POSITA would understand that when a component is 'fixed' with respect or relative to another it means that the spacing between the two components cannot change." PO Resp. 67 (citing Ex. 2013 (Culbert Decl.) ¶ 147). Patent Owner points to the sole use of the term "fixed" in the Specification, which reads:

> A spinal fusion is typically employed to eliminate pain caused by the motion of degenerated disk material. Upon successful fusion, a fusion device becomes permanently **fixed** within the intervertebral disc space.

Id. (quoting Ex. 1001, 4:58–61). According to Patent Owner, "[a] POSITA would understand that 'fixed' in this passage refers to more than the implant simply engaging the disc space—it refers to the implant being secured such that the spacing between the fusion device and vertebrae cannot change." *Id.* (citing Ex. 2013 (Culbert Decl.) ¶ 148).

Patent Owner also points to the Specification's discussion of Figure 52, which describes use of a set screw "to secure the driving ramp 300 to the

actuator assembly 200." PO Resp. 67 (quoting Ex. 1001, 18:59–61) (Patent Owner's emphasis omitted). Although the Specification does not use the term "fixed" when describing this embodiment, Patent Owner asserts that its proposed construction is "consistent with" this embodiment because "set screw 438 prevents the actuator 200 and driving ramp 300 from separating from one another—i.e., the spacing between the actuator 200 and driving ramp 300 cannot change," particularly when the device is contracting. *Id.* at 67–69 (citing, e.g., Ex. 2013 (Culbert Decl.) ¶¶ 149–51).

Patent Owner also points to use of the term "fixed" in other references of record, and asserts that these references are consistent with its proposed construction. *See id.* at 69–71 (citing Ex. 2024 (US 2017/0224505, "Butler") ¶¶ 54, 78; Ex. 1016 (Christensen), 1:33–41; Ex. 1006 (Olmos) ¶ 76; Ex. 1008 (US 4,743,256, "Brantigan"), 5:40–44); *see also* Ex. 2013 (Culbert Decl.) ¶¶ 152, 154). Finally, Patent Owner asserts that Mr. Drewry's apparent understanding of the claim term "coupled" as meaning "connected and mov[ing] in concert" requires that the separate claim term "fixed" means something different. PO Resp. 71.

Petitioner responds that construction of "fixed" is unnecessary because, regardless of the construction, Chung expressly discloses that the driving ramp is "fastened" to the actuator, and "fastened" and "fixed" are synonyms. Pet. Reply 4–5, 19 (citing Ex. 1040 (Oxford Dictionary), 4, 5). Petitioner also argues that Patent Owner's proposed construction is unduly narrow and not supported by the intrinsic evidence, inasmuch as the Specification never uses the term "fixed" in describing the set screw embodiment disclosed in Figure 52. *Id.* Petitioner asserts that "if construed at all, the phrase 'wherein when the actuation member is rotated the driving

ramp is fixed with respect to the actuation member' should be interpreted to mean that when the actuator is rotated, the driving ramp remains in the same axial position relative to the actuator." *Id.* at 5.

After considering the arguments and cited evidence of record, we determine that neither party's claim construction proposal is adequately supported, and that we need not construe the term "fixed" in order to resolve the parties' disputes. Our analysis follows.

We first consider Patent Owner's proposed construction of "fixed" as meaning that "the spacing between the two components cannot change." As noted, the Specification uses the term "fixed" once, in the following sentence: "Upon successful fusion, a fusion device becomes permanently ***fixed*** within the intervertebral disc space." Ex. 1001, 4:58–61 (emphasis added). We find that this sentence does not support Patent Owner's proposed construction because it does not specifically address the spacing between the device and the adjacent vertebrae. Moreover, we find that Patent Owner's reliance on the set screw embodiment in Figure 52 is unavailing, because the Specification does not use the term "fixed" to describe this embodiment. *See* Pet. Reply 4.

On Sur-reply, Patent Owner asserts that the set screw embodiment of Figure 52 is relevant because the Specification describes the driving ramp as "secured" to the actuator, and Petitioner's proffered dictionary shows that "secured" and "fixed" are synonyms. PO Sur-reply 12 (citing Ex. 1040 (Oxford Dictionary), 5). But even if we accept Patent Owner's argument that "fixed" and "secured" are synonyms, Patent Owner does not explain why we should more narrowly construe "fixed" to mean that "the spacing between the two components cannot change."

Patent Owner's reliance on other extrinsic evidence suffers from a similar flaw. Patent Owner cites Petitioner's own patent application and other exhibits that purportedly "used 'fixed' to refer to the inability of two components to separate." PO Resp. 70–71 (citing Ex. 2024 (Butler) ¶¶ 54, 78; Ex. 1016 (Christensen), 1:33–41; Ex. 1006 (Olmos) ¶ 76; Ex. 1008 (Brantigan), 5:40–44). Patent Owner, however, does not propose that "fixed" means "inability of two components to separate," and does not adequately explain how these references support its narrower proposed construction, which requires that "the spacing between the two components cannot change." Nor does Patent Owner persuade us that Mr. Drewry's apparent understanding of the separate claim term "coupled" as meaning "connected and mov[ing] in concert," requires that we construe "fixed" as Patent Owner proposes.[15] *See id.* at 71; PO Sur-reply 11–12.

In sum, Patent Owner does not persuade us that "fixed" means that "the spacing between the two components cannot change."

Turning to Petitioner's proposed construction, we find that Petitioner also does not adequately support its proposed construction that the phrase "'wherein when the actuation member is rotated the driving ramp is fixed with respect to the actuation member' should be interpreted to mean that

[15] As noted above, Patent Owner points out that per Petitioner's proffered dictionary, "secured" and "fixed" are synonyms. *See* PO Sur-reply 12 (citing Ex. 1040 (Oxford Dictionary), 5). That dictionary also indicates that "fix" and "couple" are synonyms. *See* Ex. 1040 (Oxford Dictionary), 5. Although we need not and do not here construe the claim term "coupled," we note that Petitioner's dictionary—and Patent Owner's argument based on it—undercuts Patent Owner's attempt to create a distinction between the terms "coupled" and "fixed."

when the actuator is rotated, the driving ramp remains in the same axial position relative to the actuator." Pet. Reply 5. Petitioner's only support for this construction is a citation to Olmos's use of the term "'fixed' to refer to holding a tool in a 'fixed' position." *Id.* (citing Ex. 1006 (Olmos) ¶ 91). Petitioner argues that "[t]his means that the tool does not move during this part of the procedure, not that the tool cannot move (as [Patent Owner's] construction imposes)." *Id.* Petitioner fails to adequately explain how this rationale supports a construction of "fixed" as meaning the driving ramp remains in the same axial position relative to the actuator.

After considering all of the arguments and cited evidence of record, we agree with Petitioner that the claim term "fixed" does not need construction. Pet. Reply 4–5. This is because, as we further discuss below (*see infra* Section II.E), "Chung expressly discloses an actuator *fastened* to the driving ramp," and on this record, there is no dispute that "fastened" and "fixed" are synonyms. *See* Pet. Reply 4–5 (citing, e.g., Ex. 1005 (Chung), 1, 4–6); Pet. Reply 19–20 (citing Ex. 1040 (Oxford Dictionary), 4, 5; Ex. 1032 (translator decl.) ¶¶ 3–5); *see generally* PO Sur-reply. Thus, because Chung expressly discloses the "fixed" limitation, construction of this term is unnecessary. *See Realtime Data, LLC*, 912 F.3d at 1375 (holding that the Board is required to construe terms "only to the extent necessary to resolve the controversy") (citation omitted).

E. Anticipation by Chung

Petitioner asserts that claims 1–15 are unpatentable as anticipated by Chung. *See* Pet. 3 (Ground 1), 6–62. Patent Owner disputes Petitioner's contentions. *See* PO Resp. 13–18.

After considering all of the arguments and cited evidence of record, we find that Petitioner demonstrates by a preponderance of the evidence that Chung anticipates claims 1–9 and 15, but does not demonstrate the same for claims 10–14. We start by addressing claims 1–9 and 15, then turn to claims 10–14.

1. Analysis of Claims 1–9 and 15

a. Independent Claim 1

Petitioner provides a limitation-by-limitation analysis alleging that Chung discloses an intervertebral implant meeting each and every limitation of challenged claim 1. *See* Pet. 7–22. Patent Owner disputes two aspects of Petitioner's mapping of Chung to claim 1, namely: (1) whether Chung discloses the claimed "extension" and "extension extending in a longitudinal axis from the expansion portion" (recited in limitation 1[h]); and (2) whether Chung's driving ramp is "fixed" with respect to the actuation member (recited in limitation 1[k]). *See* PO Resp. 10–29, 67–77; *see also* Pet. 129 (claims appendix showing claim limitations).

We determine that Petitioner has shown by a preponderance of the evidence that Chung discloses each and every limitation of claim 1. We adopt Petitioner's undisputed analysis of claim limitations 1[a–g] and [i–j] as our own. *See* Pet. 7–14, 17–20; Ex. 1002 (Drewry Decl.) ¶¶ 79–103, 113–21. Below we address the parties' arguments directed to disputed limitations 1[h] and 1[k].

i. Limitation 1[h]: wherein the central ramp comprises an expansion portion and an extension, the extension extending in a longitudinal axis from the expansion portion

As noted above, Patent Owner disputes whether Chung discloses the claimed "extension" and "extension extending in a longitudinal axis from the expansion portion," as recited in limitation 1[h]. To provide context for our analysis, we reproduce below Petitioner's annotated excerpt of Chung's Figure 2:

Chung, Fig. 2

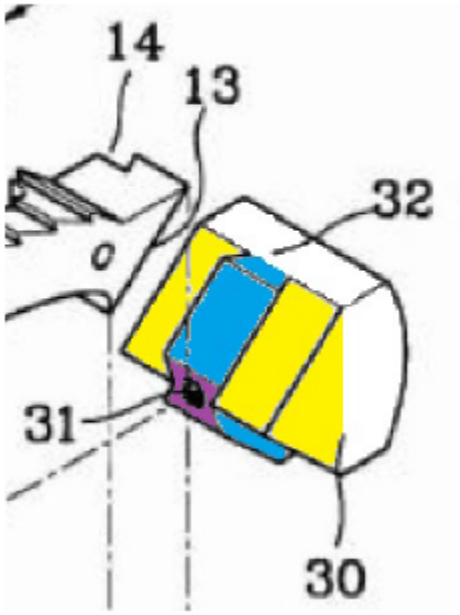

Pet. 15. Petitioner's annotated excerpt of Chung's Figure 2 shows Chung's lead wedge 30, which Petitioner maps to the claimed "central ramp." *See* Pet. 14–15. The excerpt also shows Chung's dovetail 32 (blue) and ramped surfaces (yellow) that flank dovetail 32, which Petitioner maps to the claimed "extension" and "expansion portion," respectively. *See id.*

Limitation 1[h] has several parts; we address in turn below whether Chung teaches (1) an "***extension*** extending . . . ***from*** the expansion portion," and (2) whether the extension is "extending ***in a longitudinal axis*** from the expansion portion."

1. extension

Patent Owner first argues that Chung's dovetail 32 is not an "extension" because, under Patent Owner's proposed construction of "extension," dovetail 32 does not extend the length of the distal wedge/central ramp. *See* PO Resp. 16. This argument is unavailing, because as we discussed above, we do not adopt Patent Owner's proposed construction of "extension."[16] *See supra* Section II.D.1.

Patent Owner next argues that Chung fails to disclose an "extension extending . . . ***from*** the expansion portion" because Chung's dovetail 32 at best maps to the claimed "expansion portion," not the claimed "extension." *See* PO Resp. 16–20. This argument is unavailing.

To arrive at its conclusion that Chung's dovetail 32 maps to the claimed "expansion portion," Patent Owner improperly compares Chung's lead wedge with an embodiment depicted in Figure 52 of the '731 patent. *See* PO Resp. 19. The proper comparison, however, is to compare Chung to the claims as properly construed. Applying our construction of "extension" as meaning "an addition to a main structure," we find that Chung's dovetail

[16] Even if the claim term "extension" required the extension to increase the length of the central ramp as Patent Owner proposes (*see* PO Resp. 11, 16), we find that on the full trial record, Petitioner has adequately demonstrated that Chung's dovetail 32 increases the length of Chung's lead wedge 30 (the central ramp). We discuss the reasons for this conclusion below. *See infra* Section II.E.1.a.i.2.

32 is "an addition to a main structure." That is, Petitioner sufficiently shows that Chung's dovetail 32 is an addition to central ramp/lead wedge 30. This can be seen, for example, in Petitioner's annotated excerpt of Chung's Figure 2, reproduced above (*supra* Section II.E.1.a.i), where dovetail 32 is an addition to lead wedge 30 (the main structure) because it protrudes above and below the surfaces of the lead wedge.

Patent Owner also argues that because Chung's dovetail facilitates expansion, it is part of the claimed "expansion portion," and cannot be an "extension." PO Resp. 19. Patent Owner's attempt to exclude a structure from being an "extension" if it facilitates expansion is contrary to the Specification. Indeed, we agree with Petitioner that the Specification teaches that (i) "an extension can have ramped surfaces that facilitate expansion (e.g., Ex. 1001, 18:31–41)," and (ii) "two expansion portions can have a dovetail between them with slanted surfaces interacting with the endplates (*id.*, 10:37–48, Fig. 25)." Pet. Reply 27. Thus, we disagree with Patent Owner's argument that Chung's dovetail cannot map to the claimed extension because it instead maps to the claimed expansion portion.

On the full trial record, we determine that Petitioner has shown by a preponderance of the evidence that Chung's dovetail 32 teaches the claimed "extension" and "extension extending . . . from the expansion portion."

2. the extension extending in a longitudinal axis from the expansion portion

The parties dispute whether Chung's extension/dovetail 32 "extends in a longitudinal axis from the expansion portion," as recited in limitation 1[h].[17] Pet. 15; PO Resp. 22.

As an initial matter, Petitioner argues that Patent Owner and the Board incorrectly read this limitation to require that the extension extend past the expansion portion. *See* Pet. Reply 9. Petitioner argues that the limitation instead "speaks only to the *direction* of the extension, not to its *extent*." Pet. Reply 3 ("[T]he limitation says nothing about **how far** the extension must extend . . . ."); Ex. 1036 (Drewry Reply Decl.) ¶ 28. As such, Petitioner argues that Chung's extension need not "reach past the expansion portion's terminal plane." Pet. Reply 3.

Under this view of the claim, Petitioner argues that Chung's dovetail extends at an acute angle to the longitudinal axis, and the acute angle has a "longitudinal component" that satisfies the claim. *See id.* at 8–9. Petitioner depicts the "longitudinal component of this 'acute' angle" in the figure reproduced below:

[17] This limitation appears only in independent claim 1; it does not appear in independent claims 10 and 15.

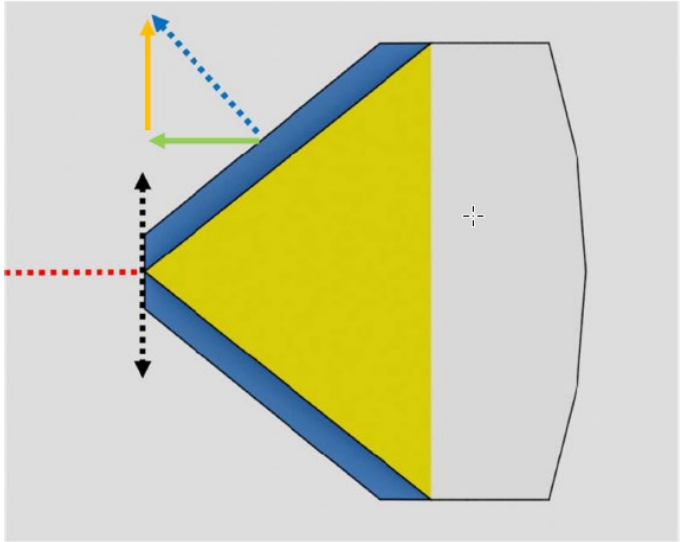

Pet. Reply 9. The above graphic depicts Patent Owner's side view of Chung's lead wedge 30, with further annotations from Petitioner. *See* Ex. 1036 (Drewry Reply Decl.) ¶ 29. Specifically, Patent Owner's graphic includes a blue dashed line to demonstrate that Chung's extension extends at an angle acute to the longitudinal axis of lead wedge 30. Petitioner adds a green vertical arrow and an orange horizontal arrow, to demonstrate that the acute angle (blue dashed line) "contains both a longitudinal component and a vertical component." *Id.* Mr. Drewry and Petitioner assert that the green vertical arrow in this graphic "shows the longitudinal component of the direction that Chung's dovetail extends from the surrounding expansion portion, . . . which is all that Claim 1's limitation requires." *Id.* ¶ 30; Pet. Reply 8–9.

We disagree with Petitioner that limitation 1[h] refers only to the *direction* the extension must extend. *See* Pet. Reply 3; Ex. 1036 (Drewry Reply Decl.) ¶ 28. As Patent Owner correctly states, "the claim does not recite an extension 'extending in a longitudinal *direction*.'" PO Sur-reply 10. Instead, it states that the extension must *extend* in a *longitudinal axis*

from *the expansion portion*. We agree with Patent Owner that the wording of this limitation as a whole requires that the "extension necessarily must protrude beyond a longitudinal end of the expansion portion." *Id.* at 11. We also agree with Patent Owner that "[u]nder Petitioner's tenuous theory, an extension in any direction except 90 or 180 degrees would satisfy the claim language since any such direction has a so-called 'longitudinal component.'" *Id.* at 13. For these reasons, we disagree with Petitioner's argument that the purported "longitudinal component" of Chung's extension satisfies limitation 1[h].

We thus turn to the parties' arguments as to whether Chung's extension nevertheless meets this claim limitation under our interpretation of the claim (which requires that the extension protrude beyond a longitudinal end of the expansion portion). In the Petition, Petitioner relies on a variety of figures from Chung for this limitation. First, Petitioner provides annotated excerpts of Chung's Figures 1 and 2, which we reproduce below:

Chung, Fig. 1	Chung, Fig. 2
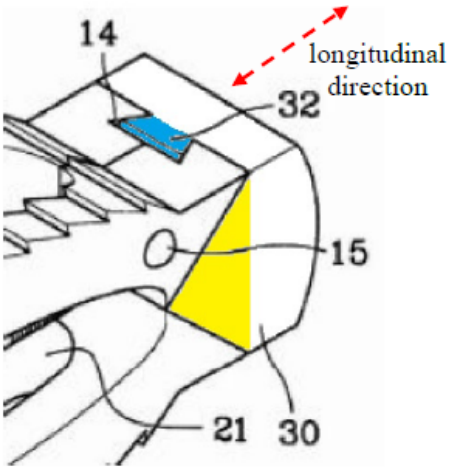	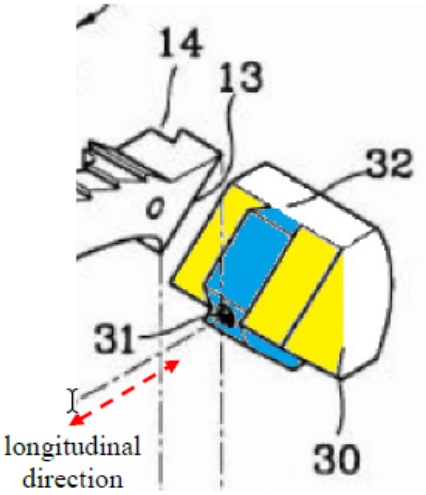

Pet. 17. Petitioner asserts that these annotated excerpts of Chung's Figures 1 and 2 demonstrate that dovetail 32 (colored blue) extends from the surface of lead wedge 30 in the longitudinal direction, as indicated by the dashed red arrow. *See id.* at 16–17.

Patent Owner provides its own annotation of Chung's Figure 2, which we reproduce below:

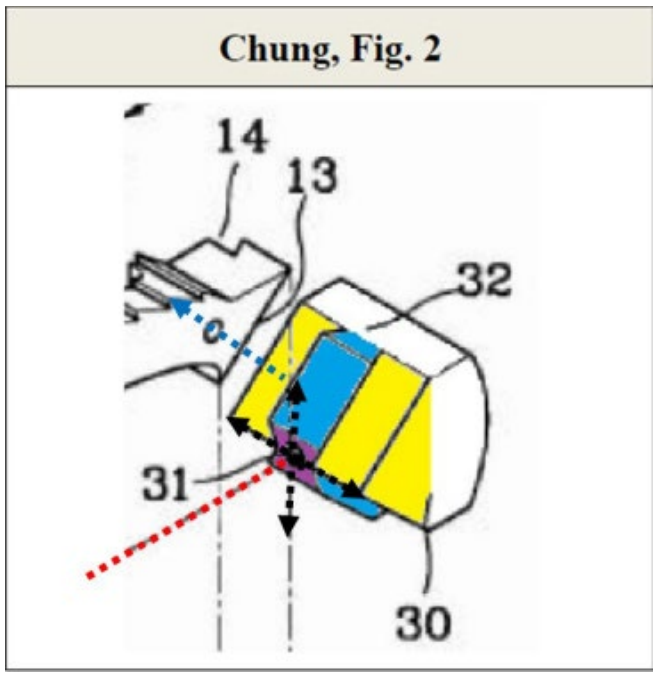

PO Resp. 22. Based on its further annotated excerpt of Chung's Figure 2, Patent Owner asserts that Chung's dovetail (blue) protrudes in a direction (shown by the blue dashed arrow) that is acute to the longitudinal axis (red dashed line), but does not appear to extend in a longitudinal direction past the plane where the expansion portion (yellow) terminates. *See id.*

We find that it is inconclusive, on this evidence, whether Chung's Figure 2 depicts extension/dovetail 32 extending in a longitudinal axis from the expansion portion (yellow). *Accord* Ex. 1026 (Hatch Decl.) ¶ 25 ("the perspective view of lead wedge 30 shown in Chung's figure 2 is somewhat

inconclusive"). Based on the parties' competing excerpts of Chung's Figure 2, we find that it is equally likely that the blue dovetail extends past the yellow structure (as Petitioner contends), as it is the blue and yellow structures terminate in the same plane (as Patent Owner contends).

Nevertheless, Petitioner also relies on an annotated excerpt of Chung's Figure 4, which we reproduce below:

Chung, Fig. 4

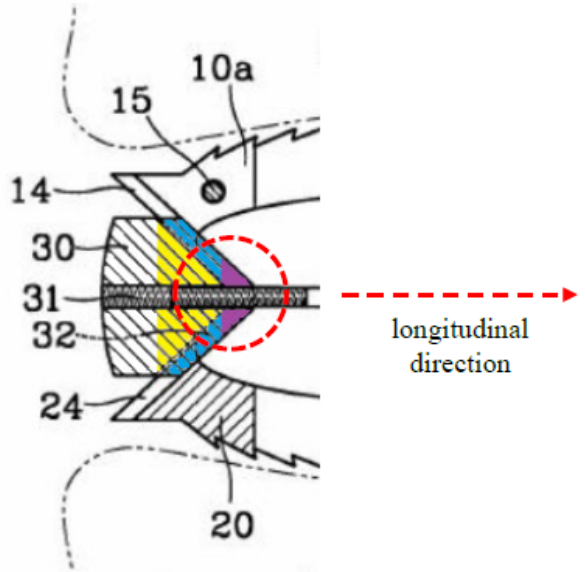

Pet. 16. Petitioner contends that this figure shows that "a portion of dovetail (32)," which is highlighted in purple, "extends longitudinally from 'lead wedge (30)' [highlighted in yellow] and receives the actuation member." *Id.* at 15–16.

Prior to institution, the parties contested whether Petitioner had accurately annotated this excerpt of Chung's Figure 4. *See, e.g.*, Prelim. Resp. 79–83, Prelim. Reply 5; Prelim. Sur-reply 6. Patent Owner argued that because Chung's Figure 4 is a cross-section view, the yellow structure would be hidden behind the blue structure, "making it impossible for that

figure to depict the blue extending beyond the yellow." Prelim. Resp. 82; *see also id.* at 80–83.

Based on the pre-institution record, we preliminarily agreed with Patent Owner that because the expansion portion of lead wedge 30 (yellow) is hidden behind the central layer material of the lead wedge 30 in Chung's Figure 4, it would impossible for Chung's Figure 4 to depict the blue extension extending beyond the yellow, as shown in Petitioner's annotations. *See* Inst. Dec. 33–34.

Post-institution, Petitioner argues that it correctly analyzed Chung's Figure 4, and that we overlooked or misapprehended key features in this figure, namely, dashed lines that indicate features that are hidden from view in the cross-section. Pet. Reply 9, 11. To demonstrate its point, Petitioner provides an additional annotated excerpt of Chung's Figure 4, reproduced below:

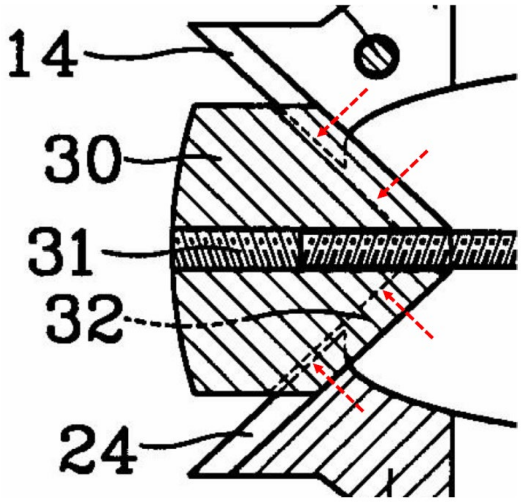

Reply 11. This excerpt of Chung's Figure 4 shows lead wedge 30 interacting with endplate surfaces 14 and 24. Petitioner added red arrows to highlight dashed lines in the figure. Mr. Drewry explains that these dashed lines

> indicate exactly where the expansion portion surfaces (yellow) exist relative to the dovetail. Thus, Chung's cross-sectional figures use well-understood dashed lines to show surfaces/ structures that are behind the dovetail and would otherwise be obscured, including for both the ramped surfaces of the first expansion portion at issue (i.e., the surfaces highlighted in yellow by Petitioner), and the "foot" portions of the endplates that engage with the first expansion portion and its dovetail structure . . . .

Ex. 1036 (Drewry Reply Decl.) ¶ 33; *see also* Ex. 1026 (Hatch Decl.) ¶¶ 26, 28–36 (explaining use of dashed lines in technical drawings to indicate hidden features). Petitioner argues that these dashed lines "indicate exactly what the panel claimed was missing—***the precise location of the expansion portion's surfaces***." Pet. Reply 11–12.

As it did prior to institution, Patent Owner again argues that in the cross-sectional view shown in Chung's Figure 4, the yellow structure would be hidden behind the blue structure, "making it impossible for that figure to depict the blue extending beyond the yellow." PO Resp. 27; *see also id.* at 25–29; Ex. 2013 (Culbert Decl.) ¶¶ 77–81. Patent Owner presents its own side-view illustration of Chung's lead wedge 30, which we reproduce below:

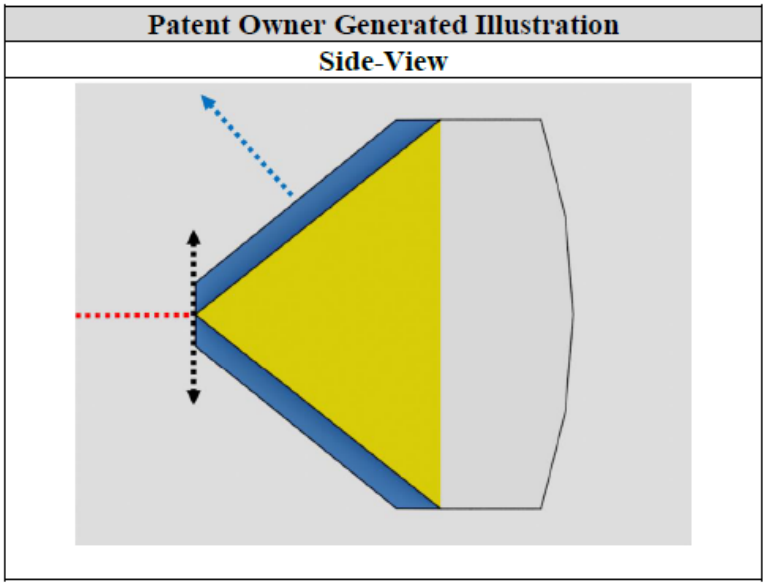

PO Resp. 22–23. Shown above is Patent Owner's side-view illustration of Chung's lead wedge 30. According to Mr. Culbert, "[i]f Chung did have a figure intending to show the lead wedge 30 from a side-view but without cross-sectioning, it would appear as shown." Ex. 2013 (Culbert Decl.) ¶ 81; *see also id.* ¶ 73; PO Resp. 22–23. Mr. Culbert asserts that "[a] POSITA would understand that the yellow and blue both terminate in the same proximal plane," as indicated by a vertical black dashed arrow in the illustration. Ex. 2013 (Culbert Decl.) ¶ 74.

After consideration of all of the arguments and cited evidence of record, we agree with Petitioner that Chung discloses that its extension (dovetail 32) protrudes beyond a longitudinal end of the expansion portion, as required by claim limitation 1[h]. As we discuss below, this can be seen in Chung's Figure 4.

In our Institution Decision, we preliminarily found that Chung's Figure 4 does not support Petitioner's contention that extension/dovetail 32 "extends in a longitudinal axis from the expansion portion" as claimed,

because we did not understand Figure 4 to show the location of the expansion portions of lead wedge 30. Inst. Dec. 34. Without this information, we were unable to ascertain the relative positioning of the expansion portions and the extension.

On the full trial record, Petitioner persuades us that our preliminary understanding of Figure 4 was incorrect. *See* Pet. Reply 11–12. Petitioner demonstrates, and Patent Owner does not dispute, that dashed lines are commonly used in the art to show hidden features in technical drawings. *See* Ex. 1036 (Drewry Reply Decl.) ¶ 34 (citing examples in the '731 patent and in Olmos); Ex. 1026 (Hatch Decl.) ¶¶ 26, 28–36 (explaining use of dashed lines in technical drawings to indicate hidden features). The dashed lines in Chung's Figure 4 indicate "the precise location of the expansion portion's surfaces"—the very information we suggested was missing in our Institution Decision. *See* Pet. Reply 11–12; Ex. 1036 (Drewry Reply Decl.) ¶¶ 33–37.

To illustrate, Petitioner provides a further annotated excerpt of Chung's Figure 4:

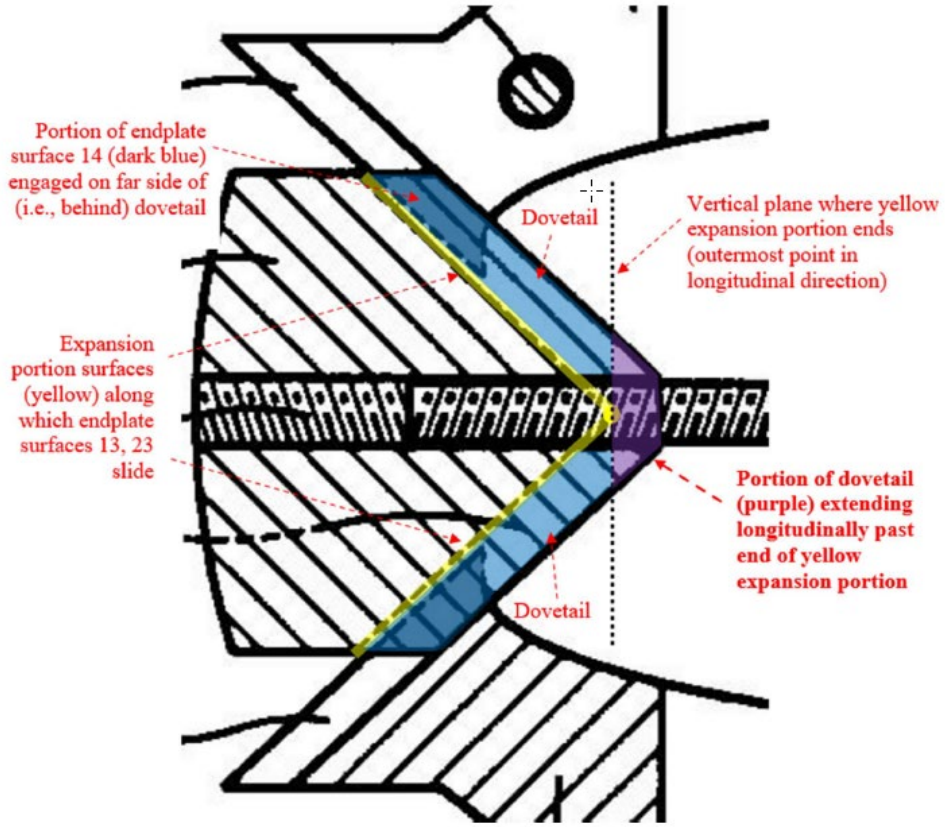

Pet. Reply 16. The above excerpt of Chung's Figure 4 shows lead wedge 30 interacting with the endplates of Chung's implant. Petitioner's annotations highlight the information signified by dashed lines in Chung's Figure 4, indicating that (1) the dashed line on the top endplate indicates the "portion of endplate surface 14 (dark blue) engaged on the far side of (i.e., behind) [the] dovetail;" and (2) the yellow dashed line indicates the "[e]xpansion portion surfaces (yellow) along which endplate surfaces 13, 23 slide." *Id.*; *see also* Ex. 1036 (Drewry Reply Decl.) ¶¶ 36, 38, 39. Notably, Mr. Culbert concedes that Petitioner's interpretation of the dashed lines in Chung's Figure 4 is reasonable. *See* Ex. 1041 (Culbert Depo. Tr.), 208:19–209:1

(agreeing that it would "be reasonable to interpret those dotted lines as representing the surfaces on the wedges that the end plate surfaces slide against as the device expands and contracts"), 221:7–14 (agreeing that "[i]f you extrapolate the dotted lines on this figure [Chung's Figure 4], that's where they would intersect"), 202:21–205:10; Pet. Reply 16.

Patent Owner correctly notes that the dashed lines in Chung's Figure 4 do not specifically depict the point where the expansion surfaces meet. PO Sur-reply 14. This is because the meeting point is behind the actuator, and as Mr. Drewry explains, "based on drafting standards and the purpose of this cross-sectional view, . . . [it] would not be appropriate" for Chung's Figure 4 to show the meeting point. Ex. 2033 (Drewry Reply Depo. Tr.), 33:20–34:3. Nevertheless, based on the information in Chung, we agree with Petitioner that a person of ordinary skill in the art would know that the expansion surfaces meet behind the actuator at the position Petitioner indicates with the dashed yellow line. *See* Pet. Reply 13–15; Ex. 1036 (Drewry Reply Decl.) ¶ 38; Ex. 1041 (Culbert Depo. Tr.), 221:7–14 (agreeing that "[i]f you extrapolate the dotted lines on this figure [Chung's Figure 4], that's where they would intersect"). This meeting point is consistent with the location of Chung's endplate surfaces and Chung's description of how the endplates interact with the wedges, as depicted in Chung's Figures 1–6 and as discussed in the Petition. *See* Pet. Reply 12–15; Ex. 1036 (Drewry Reply Decl.) ¶¶ 35–37. Incidentally, the meeting point of the expansion surfaces depicted by the yellow dashed line in Petitioner's annotated version of Chung Figure 4 is also consistent with the location of the meeting point in Patent Owner's side-view illustration of Chung's lead wedge 30 reproduced above.

Once the meeting point of the expansion surfaces (i.e., the plane where they terminate) is known, we agree with Petitioner that "one can conclude definitively that Chung's dovetails (blue) extend longitudinally past the plane where the expansion portion terminates," as shown in the purple-shaded region in Petitioner's annotated excerpt of Chung's Figure 4 reproduced above. Pet. Reply 15; Ex. 1036 (Drewry Reply Decl.) ¶ 39. In other words, Petitioner persuasively demonstrates that considering the entirety of the information in Chung's Figure 4 (including the information signified by the dashed lines), that Figure shows extension/dovetail 32 extending in a longitudinal axis from the expansion portion (yellow), as recited in limitation 1[h].

We arrive at this conclusion after careful consideration of Patent Owner's arguments. First, Patent Owner's own side-view illustration of Chung's lead wedge 30, which shows the extension (blue) and expansion portion (yellow) terminating in the same plane, is unavailing. *See, e.g.*, PO Resp. 23. Patent Owner and Mr. Culbert generated the illustration based on Chung's Figure 2. *See* Ex. 1041 (Culbert Depo. Tr.), 78:9–79:9; Pet. Reply 16. Patent Owner's reliance solely on Chung's Figure 2 improperly ignores the additional information disclosed in Chung's Figure 4, e.g., the information imparted by the dashed lines that indicate hidden material.

Second, Patent Owner argues that Chung's Figure 4 "is not intended to show the extent of the yellow side ramps relative to the dovetail and a POSITA would not rely on these drawings to determine that extent." PO Sur-reply 14; *see also id.* (citing Ex. 2013 (Culbert Decl.) ¶ 81, n.4 ("[A] POSITA would not rely on a figure that is clearly designed not to depict the

yellow ramped sides to determine where those sides reside relative to the dovetail 32."); Ex. 1041 (Culbert Depo. Tr.), 210:9–211:13 (opining that "a person of ordinary skill in the art wouldn't rely on this [Chung's Figure 4] to understand what's happening," but would instead "rely on something that you can actually see them, not through hidden lines"), 227:2–17 (opining that a person of ordinary skill in the art would look to Chung's Figure 2 to determine where the dovetails terminate relative to the side ramps)).

We disagree with Patent Owner. Petitioner persuasively demonstrates that there are many real-world instances where side-views (like Chung's Figure 4) are used instead of perspective views (like Chung's Figure 2) "to determine whether one object is positioned further forward/ahead of another." Ex. 1026 (Hatch Decl.) ¶¶ 53–55; Ex. 1036 (Drewry Reply Decl.) ¶ 41. Thus, we disagree with Patent Owner that a person of ordinary skill in the art would look only to Chung's Figure 2 and would ignore Figure 4 (and in particular, the information provided by the hidden lines) in determining where the dovetail terminates relative to the side ramps.

Third, Patent Owner argues that "much of" Mr. Hatch's testimony is improperly incorporated by reference "and cannot be plausibly responded to due to page constraints." PO Sur-reply 13–14 (citing Ex. 1026 (Hatch Decl.) pages 8–39). This generic objection to "much of" Mr. Hatch's declaration is unavailing because it fails to adequately specify which portions of the declaration Patent Owner objects to, and which portions it does not.[18] *See, e.g.*, *Rembrandt Diagnostics*, 76 F.4th at 1383.

[18] Patent Owner suggests that it could not more fully respond to Mr. Hatch's declaration "due to page constraints." PO Sur-reply 13–14. Our rules

Patent Owner also more specifically argues that "Petitioner improperly incorporates-by-reference 12 pages of expert testimony via a single sentence." PO Sur-reply 16 n.2 (citing Pet. Reply 17, which in turn cites Ex. 1026 (Hatch Decl.) ¶¶ 49–66). We find that many of the paragraphs within the cited range (i.e., Hatch Declaration paragraphs 49–66) appear to have a tenuous connection to the proposition for which Petitioner cites these paragraphs. *See* Pet. Reply 17. That said, we find that paragraphs 53–55 directly relate to Petitioner's proposition in the Reply, i.e., that "Petitioner's experts explain why a [person of ordinary skill in the art] would rely on a cross-sectional view over a perspective view for making the determination in question, because only the cross-sections provide the needed side view directly orthogonal to the positions of the yellow expansion portion and the end of the dovetail." *Id.* Accordingly, we find that paragraphs 53–55—the only paragraphs we cite from Petitioner's range in reaching our conclusion—are not improperly incorporated by reference into Petitioner's Reply.

In sum, on the full trial record, we determine that Petitioner has shown by a preponderance of the evidence that Chung teaches "the extension extending in a longitudinal axis from the expansion portion," as recited in claim limitation 1[h].

---

permit Patent Owner to request a waiver of word counts or page limits. 37 C.F.R. § 42.24(a)(2). Patent Owner did not seek such a waiver.

ii. Limitation 1[k]: wherein when the actuation member is rotated the driving ramp is fixed with respect to the actuation member and the central ramp is moved in either the first direction or the second direction

The parties dispute whether Chung teaches the portion of limitation 1[k] that recites "wherein when the actuation member is rotated the driving ramp is ***fixed*** with respect to the actuation member and the central ramp is moved in either the first direction or the second direction." *See* Ex. 1001, 21:18–21 (emphasis added).

In connection with this limitation, Petitioner provides annotated versions Chung's Figures 3 and 4, which we reproduce below:

Chung, Figs. 3-4

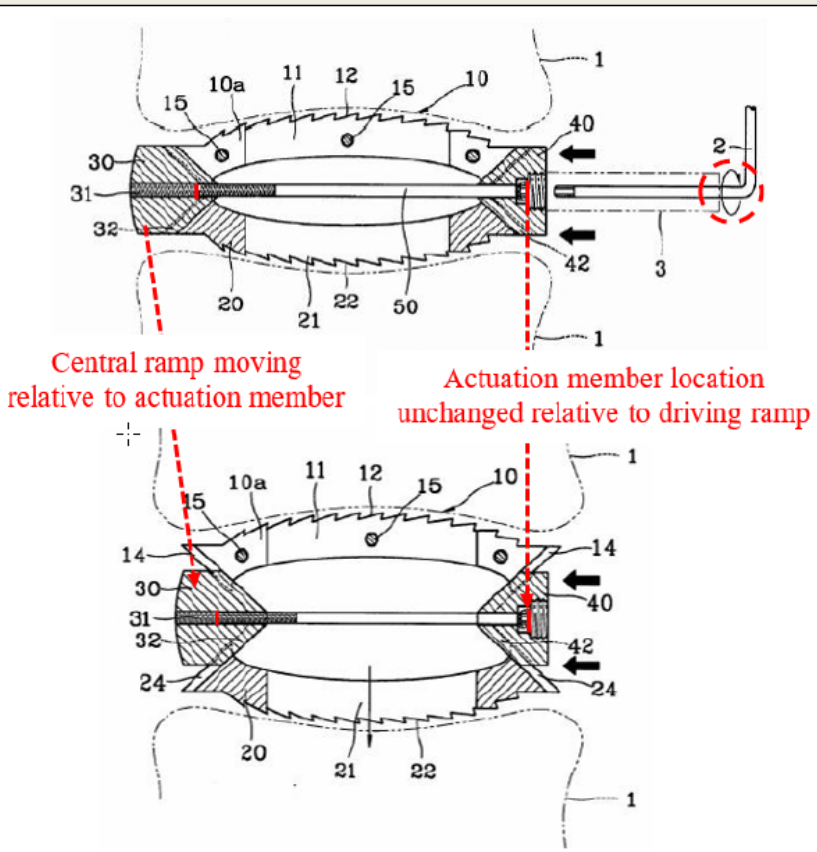

Pet. 22. Petitioner's annotated figures reproduced above show Chung's intervertebral implant having "groove fastening screw (50)" (i.e., the claimed "actuation member"), opposing wedge 40 (i.e., the claimed "driving ramp"), and lead wedge 30 (i.e., the claimed "central ramp").[19] Mr. Drewry explains that because the screw 50 and central ramp/opposing wedge 40 are threadingly engaged, turning screw 50 will cause the central ramp/opposing wedge 40 to move, whereas "the actuation member and driving ramp (40) are fixed relative to each other by virtue of the lack of engaging threads in driving ramp opening (41)." Ex. 1002 (Drewry Decl.) ¶ 122.[20] Mr. Drewry also cites Chung's statement that

> groove fastening screw (50) is ***fastened*** to the penetrating hole (41) of the aforementioned opposing wedge (40) and to the screw hole (31) of the lead wedge (30) in order to adjust the distance between the aforementioned opposing wedge (40) and the aforementioned lead wedge (30).

Id. (quoting Ex. 1005 (Chung), 6). Mr. Drewry and Petitioner assert that based on these disclosures, a person of ordinary skill in the art would have understood that Chung expressly discloses limitation 1[k]. *Id.* ¶ 124; Pet. 21–22; Pet. Reply 18–19.

---

[19] For clarity, we note that the figures above do not show the lead line 50 for the groove fastening screw depicted in the middle of implant.

[20] Patent Owner argues that for limitation 1[k], Petitioner "improperly incorporates by reference paragraphs of Dr. Drewry's declaration spanning four pages to try and fill in the gaps." PO Resp. 76 (citing Pet. 22, which in turn cites Ex. 1002 (Drewry Decl.) ¶¶ 122–24). We disagree that these three paragraphs of Mr. Drewry's declaration are improperly incorporated by reference. Rather, these paragraphs appropriately elaborate on how a person of ordinary skill in the art would understand the disclosures in Chung that Petitioner discusses in the Petition at pages 21–22.

Patent Owner responds, urging that "[i]n Chung the screw 50 and wedge 40 are not fixed because Chung does not have any mechanism (e.g., a set screw) that prevents the screw from backing out from the wedge when the implant is transitioning from the expanded to unexpanded state." PO Resp. 72 (citing Ex. 2013 (Culbert Decl.) ¶¶ 155–56); *see also id.* at 72–76; Ex. 2013 (Culbert Decl.) ¶¶ 157–64. According to Patent Owner, both the '731 patent and Petitioner's own patent publication (Butler, Ex. 2024) use a set screw or retaining member to secure or "fix" the driving ramp and actuator to each other and the lack of such in Chung shows that it does not teach or suggest a driving ramp "fixed" as recited in limitation 1[k]. PO Resp. 67–69 (citing, e.g., Ex. 1001, 18:59–61; Ex. 2013 (Culbert Decl.) ¶¶ 149–52; Ex. 2024 (Butler) ¶¶ 54, 78). Patent Owner also disputes Petitioner's translation of Chung, and submits its own translation, which uses the term "coupled" instead of "fastened." PO Resp. 76–77; Ex. 2025 (Chung translation) ¶ 31. Patent Owner argues that "coupled" does not mean "fixed" as claimed. PO Resp. 71.

After considering all of the arguments and cited evidence of record, we find that Petitioner demonstrates by a preponderance of the evidence that Chung discloses limitation 1[k]. Specifically, Chung expressly states that "groove fastening screw (50) is ***fastened*** to the penetrating hole (41) of the aforementioned opposing wedge (40)." Ex. 1005 (Chung), 6. It is undisputed on this record that "fastened" is a synonym of the claim term "fixed." *See* Pet. Reply 19–20 (citing Ex. 1040 (Oxford Dictionary), 311, 298); *see generally* PO Sur-reply. Thus, Chung expressly discloses this claim limitation, which is sufficient for anticipation. *See, e.g.*, *EMI Group N. Am., Inc., v. Cypress Semiconductor Corp.*, 268 F.3d 1342, 1350

(Fed. Cir. 2001) ("A prior art reference anticipates a patent claim if the reference discloses, either expressly or inherently, all of the limitations of the claim.").

Patent Owner's complaint that Chung fails to disclose a physical mechanism (e.g., a set screw) that prevents the screw/actuator from backing out from the wedge when the implant is transitioning from the expanded to unexpanded state is unavailing. *See, e.g.*, PO Resp. 72, 76. The claim language does not recite a set screw or some other physical mechanism to prevent back out. It merely requires that "the driving ramp is ***fixed*** with respect to the actuation member." Ex. 1001, 21:18–21 (emphasis added). As we discussed above, Chung expressly discloses that the screw is "fastened" (i.e., "fixed") to the penetrating hole of wedge 40 (i.e., the claimed driving ramp). Ex. 1005 (Chung), 6. We note that Patent Owner does not argue that Chung's disclosure is not enabling to a person of ordinary skill in the art. *Cf. Bristol-Myers Squibb Co. v. Ben Venue Labs., Inc.*, 246 F.3d 1368, 1379 (Fed. Cir. 2001) ("[A]nticipation does not require actual performance of suggestions in a disclosure. Rather, anticipation only requires that those suggestions be enabling to one of skill in the art.").

Patent Owner seeks to avoid Chung's express disclosure by arguing that "the inclusion of 'fastened' in the translation provided by Petitioner is clearly a mistake or ambiguity in the translation given the complete lack of any teachings or illustrations of a fixation mechanism relating to the screw and opposing wedge." PO Resp. 76–77 (citing Ex. 2013 (Culbert Decl.) ¶ 164). Patent Owner submits a different certified translation of Chung, which it characterizes as "refer[ring] to the head screw 50 being 'coupled' rather than 'fastened.'" *Id.* at 77; Ex. 2025 (Chung translation) ¶ 31.

We do not credit Patent Owner's new Chung translation. First, as Petitioner points out, in a separate *inter partes* review (IPR2020-01306), Patent Owner itself submitted and relied upon the same translation of Chung that Petitioner uses here. *See* Pet. Reply 19; *see also* Ex. 1043 (copy of Chung translation submitted as Exhibit 1033 in IPR2020-01306); Ex. 1042 (Patent Owner's petition in IPR2020-01306; page 15 quotes Chung's description of screw 50 being "fastened" between the wedges). Patent Owner's attempt to discredit Petitioner's Chung translation rings hollow where Patent Owner itself submitted and relied on the exact same translation in IPR2020-01306. *See* Pet. Reply 19.

Second, Petitioner submitted a declaration from a translator who reviewed both Petitioner's original Chung translation (Exhibit 1005) and Patent Owner's new Chung translation (Exhibit 2025) against the original Korean source text, and concluded that "the term used in Exhibit 1005, 'fasten' (and modified versions thereof), is more accurate and accepted than is 'couple' (and modified versions thereof), for the Korean term ('체결')." Ex. 1032 (translator decl.) ¶ 3; *see also id.* at ¶¶ 4–5. We find this testimony persuasive as to the correctness of the Chung translation submitted as Exhibit 1005. We also note that Patent Owner did not dispute any aspect of this declaration. *See generally* PO Sur-reply.

In sum, on the full trial record, we determine that Petitioner has shown by a preponderance of the evidence that Chung expressly teaches claim limitation 1[k] ("wherein when the actuation member is rotated the driving ramp is ***fixed*** with respect to the actuation member and the central ramp is moved in either the first direction or the second direction").

iii. Conclusion on Claim 1

On this record, we determine that Petitioner has shown by a preponderance of the evidence that Chung teaches each and every limitation of claim 1, and therefore anticipates claim 1.

b. Dependent Claims 2–9

We have reviewed Petitioner's contentions regarding dependent claims 2–9, which each depend directly or indirectly from claim 1. *See* Pet. 22–44. Beyond the arguments we already discussed above for claim 1, Patent Owner did not make any arguments specific to the additional limitations of these dependent claims. *See generally* PO Resp.

Based on the full trial record, we determine that Petitioner has shown by a preponderance of the evidence that Chung teaches each and every limitation of claims 2–9 for the reasons discussed in the Petition (Pet. 22–44) and above with respect to claim 1 (*see supra* Section II.E.1.a), and therefore that Chung anticipates claims 2–9.

c. Independent Claim 15

Petitioner provides a limitation-by-limitation analysis as to how Chung allegedly discloses an intervertebral implant meeting each and every limitation of independent claim 15. *See* Pet. 57–62. Patent Owner specifically disputes two aspects of Petitioner's mapping of Chung to claim 15, namely: (1) whether Chung discloses the claimed "extension" (recited in limitation 15[g]); and (2) whether Chung's driving ramp is "fixed" with respect to the actuation member (recited in limitation 15[k]). PO Resp. 10–20, 67–77; *see also* Pet. 134 (claims appendix showing limitations).

We addressed Patent Owner's arguments above in the context of analyzing claim limitations 1[h] and 1[k]. For the reasons discussed above, Patent Owner's arguments are unavailing, and we find that Chung discloses both the claimed "extension" as recited in limitation 15[g], and that the driving ramp is "fixed" with respect to the actuation member as recited in limitation 15[k]. *See supra* Sections II.E.1.a.i.1 and II.E.1.a.ii.

After considering all of the arguments and cited evidence of record, for the reasons discussed in the Petition and above, we determine that Petitioner has shown by a preponderance of the evidence that Chung discloses an intervertebral implant that teaches each and every limitation of claim 15, and therefore anticipates claim 15. *See* Pet. 57–62; *supra* Sections II.E.1.a.i.1 and II.E.1.a.ii.

2. Claims 10–14

Petitioner provides a limitation-by-limitation analysis as to how Chung allegedly discloses an intervertebral implant meeting each and every limitation of independent claim 10 and dependent claims 11–14. *See* Pet. 44–57.

Patent Owner specifically disputes three aspects of Petitioner's mapping of Chung to independent claim 10, namely: (1) whether Chung discloses the claimed "extension" (recited in limitation 10[f]); (2) whether Chung's driving ramp is "fixed" with respect to the actuation member (recited in limitation 10[j]); and (3) whether Chung discloses ramped portions of the endplates that are "complementary with one another" (recited in limitation 10[e]). *See* PO Resp. 10–20, 67–88; *see also* Pet. 132 (claims appendix showing limitations).

We previously addressed arguments (1) and (2) in the context of analyzing claim limitations 1[h] and 1[k]. For the reasons we discussed above, Patent Owner's arguments are unavailing, and we find that Chung discloses both the claimed "extension" as recited in limitation 10[f], and that the driving ramp is "fixed" with respect to the actuation member as recited in limitation 10[j]. *See supra* Sections II.E.1.a.i.1 and II.E.1.a.ii.

Below we analyze the parties' arguments as to whether Chung discloses ramped portions of the endplates that are "complementary with one another."[21]

Petitioner argues that Chung teaches this limitation because Chung's lumbar holder has endplates with ramped portions that "have the same angle mirroring each other." Pet. 45. This is illustrated in Petitioner's annotated versions of Chung's Figures 3 and 4, which we reproduce below:

[21] This limitation appears only in independent claim 10. It does not appear in independent claims 1 and 15.

Chung, Figs. 3-4

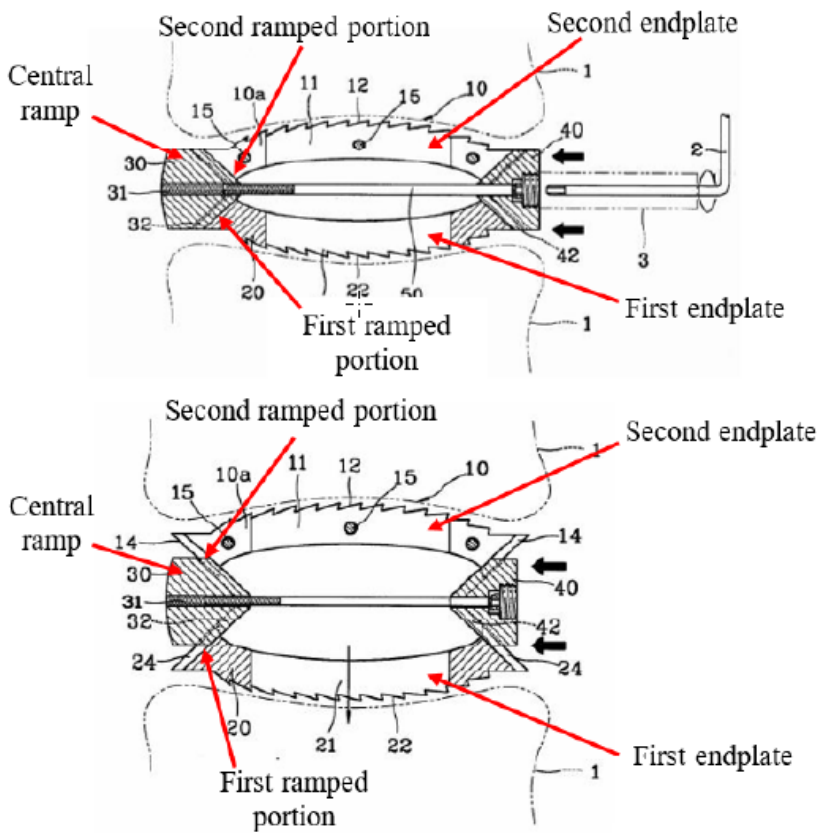

Ex. 1002 (Drewry Decl.) ¶ 183.[22] Petitioner's annotated versions of Chung's Figures 3 and 4, reproduced above, show Chung's lumbar holder

[22] Patent Owner asserts that certain aspects of Mr. Drewry's testimony in paragraphs 180–184 of his Declaration do not appear in the Petition (i.e., his discussion of "concepts like 'common planes,' 'horizontal planes,' 'symmetrical expansion,' 'asymmetrical forces,' 'symmetrical movement,' and 'machine tolerances'"). PO Resp. 87 (citing Pet. 45–46, which in turn cites Ex. 1002 (Drewry Decl.) ¶¶ 180–84). Although we cite Mr. Drewry's paragraphs 180–183 throughout this Decision, we do not cite them for his discussion of the concepts Patent Owner mentions, with the exception of "horizontal planes" and "symmetrical expansion." Specifically, we quote a statement from Mr. Drewry that uses the terms "horizontal planes" and "symmetrical expansion" in appropriately elaborating on what the Petition

with red arrows pointing to the central ramp/lead wedge 30 and first and second endplates having first and second ramped portions. *See id.* Mr. Drewry opines that Chung's first and second ramped portions "are complementary with one another, in that they are mirrored by having the same angles across the horizontal plane between them, and that they engage the top and bottom sloped surfaces of the ramp in a generally identical way and causing generally symmetrical expansion of the device." *Id.* ¶ 184.

Petitioner further asserts that during prosecution the Examiner understood that "complementary with one another" encompasses ramped portions having angles that mirror each other. Pet. 45 (citing Ex. 1004, 35–38, 40–43, 55, 57, 68, 70, 79–82, 98–100, 109–11, 113–14, 120–22, 142–43, 237–40). Petitioner argues that, consistent with the Examiner's rationale articulated during prosecution, Chung's implant can be disassembled and the ramped portions reoriented, such that they are complementary with one another. Pet. Reply 21. Petitioner provides the following diagram to illustrate its argument:

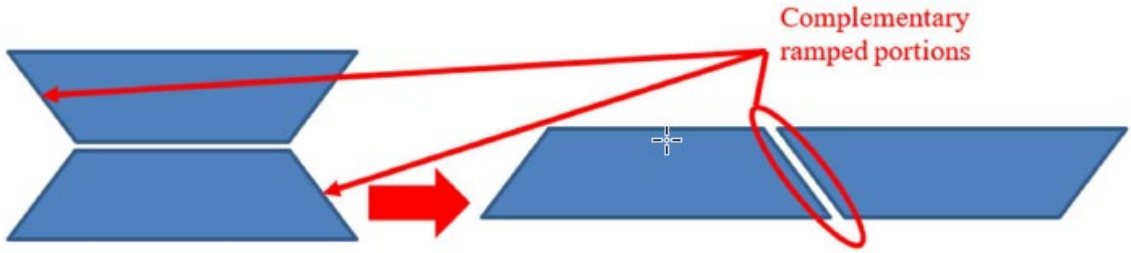

Id. On the left side of the above diagram, Petitioner presents a schematic representing a spinal implant having top and bottom endplates, where each end of each endplate has a ramped portion, such that the ramped portions on

means when referencing ramped portions that have "angles that mirror each other." Pet. 45; Ex. 1002 (Drewry Decl.) ¶ 183.

either end of the spinal implant mirror each other across the horizontal plane between them. On the right side of the diagram, Petitioner shows that if the spinal implant is disassembled, the endplates can be reoriented such that the ramped portions complete each other. *See id.* Petitioner asserts that "[s]ince Claim 10 contains no requirement regarding the configuration(s) in which the endplates must 'complete each other' (for example, this would not occur when the device is expanded), Chung should be deemed to satisfy this limitation as set forth in the Petition, even under the Board's preliminary interpretation." Pet. Reply 21.

Patent Owner responds that ramped surfaces having mirrored angles are the "*opposite* of complementary," because as Mr. Culbert explains, they "cannot complete one another absent reorienting them in a manner inconsistent with their orientation in the assembled implant." PO Resp. 79; Ex. 2013 (Culbert Decl.) ¶ 166. As to Petitioner's argument that "Claim 10 contains no requirement regarding the configuration(s) in which the endplates must 'complete each other,'" Patent Owner argues that "the claim is not directed toward a system of implant components lying on a table—it is directed toward an assembled apparatus (an 'intervertebral implant') comprising several components," and thus requires "a specific configuration where the ramped portions are complementary in an *assembled, functional* implant." PO Sur-reply 18.

On the full trial record, we find that Petitioner has not demonstrated by a preponderance of the evidence Chung teaches ramps that are "complementary with one another" as claimed. As we discussed above, we construe this term to mean "completing one another." *See supra* Section II.D.2. We find that Chung's first and second ramped portions, which are

mirrored by having the same angles across the horizontal plane between them, do not complete one another.

We also disagree with Petitioner that we should find Chung's ramped portions to be complementary with one another when the implant is disassembled and the ramped portions are reoriented. *See* Pet. Reply 21. We agree with Patent Owner that claim 10 is directed to an assembled, functional intervertebral implant, not a system of unconnected implant components. PO Sur-reply 18. For example, the claim recites that the components are interconnected, e.g., the "actuation member extend[s] through the opening of the driving ramp," and specifies that "when the actuator member is actuated," the endplates move towards or away from one another. *See id.* Accordingly, we agree with Patent Owner and Mr. Culbert that Petitioner's position is inconsistent with how a person of ordinary skill in the art would interpret claim 10. Ex. 2013 (Culbert Decl.) ¶¶ 176–77; PO Resp. 87; *see also Lindemann Maschinenfabrik GMBH v. Am. Hoist & Derrick Co.*, 730 F.2d 1452, 1459 (Fed. Cir. 1984) (reversing anticipation finding where district court "treated the claims as mere catalogs of separate parts, in disregard of the part-to-part relationships set forth in the claims and that give the claims their meaning").

For the above reasons, we determine that Petitioner has not demonstrated by a preponderance of the evidence that Chung teaches the "complementary with one another" limitation recited in claim 10, and thus has not shown that Chung anticipates claim 10.

Petitioner's arguments for dependent claims 11–14 do not overcome this deficiency. Accordingly, for at least the same reason we discussed

above for claim 10, we determine that Petitioner has not shown by a preponderance of the evidence that Chung anticipates claims 11–14.

3. Conclusion – Anticipation by Chung

For the reasons we discussed above, we find that Petitioner demonstrates by a preponderance of the evidence that Chung anticipates claims 1–9 and 15, but does not demonstrate the same for claims 10–14.

F. Obviousness Over Olmos

Petitioner asserts that claims 1–15 are unpatentable as obvious over Olmos alone or in combination with Chung. Pet. 3 (Ground 3), 67–122. Patent Owner disputes Petitioner's contentions. PO Resp. 10–56, 77–89.

After considering all of the arguments and cited evidence of record, we find that Petitioner demonstrates by a preponderance of the evidence that Olmos renders claims 1–9 and 15 unpatentable as obvious, but does not demonstrate the same for claims 10–14.[23]

---

[23] Because we find that Olmos alone renders claims 1–9 and 15 unpatentable as obvious, for these claims, we do not reach Petitioner's obviousness argument based on the combination of Olmos and Chung.

For clarity, we note that Petitioner presents two alternative obviousness arguments based on Olmos: (1) based on Olmos's Figure 16 embodiment alone; and (2) based on the combination of Olmos's Figure 8 and Figure 16 embodiments. *Compare, e.g.*, Pet. 76 (arguments based on Olmos's Figure 16 embodiment alone), *with id.* at 77–80 (arguments based on the combination of Olmos's Figure 8 and Figure 16 embodiments); *see also* PO Resp. 30. As we discuss below, we find Petitioner's obviousness arguments based on the combination of Olmos's Figure 8 and Figure 16 embodiments persuasive as to claims 1–9 and 15. Thus, for these claims, we do not address Petitioner's obviousness arguments (and Patent Owner's responses thereto) based on Olmos's Figure 16 embodiment alone.

For claims 10–14, we find all of Petitioner's arguments based on Olmos (i.e., based on the Figure 16 embodiment alone or in combination

Petitioner provides a limitation-by-limitation analysis as to how the combination of Olmos's Figure 8 and Figure 16[24] embodiments allegedly teaches or suggests an intervertebral implant meeting each and every limitation of claim 1. *See generally* Pet. 67–122. Patent Owner disputes two aspects of Petitioner's showing, i.e., whether Petitioner has demonstrated that (1) a person of ordinary skill in the art would have had a reason to use Olmos's Figure 8 extension with the Figure 16 embodiment; and (2) Olmos's ramps are "complementary with one another" (claim limitation 10[e]). *See* PO Resp. 10–20, 30–56, 77–87.

For claims 1–9 and 15, we adopt as our own Petitioner's analysis of how Olmos teaches or suggests each of the claim limitations. *See generally* Pet. 67–101, 112–17. We begin our analysis below by briefly summarizing the aspects of Petitioner's arguments in the Petition relevant to the parties' disputes, then turn to a detailed analysis of the parties' disputes regarding whether Petitioner has carried its burden to demonstrate (1) an adequate

---

with the Figure 8 embodiment) and on the combination of Olmos and Chung unavailing. This is because Petitioner relies solely on Olmos's Figure 16 embodiment as allegedly teaching or suggesting the "complementary with one another" limitation (*see* Pet. 102–03; Pet. Reply 37), but as we discuss below (*infra* Section II.F.3), we find that Petitioner has not carried its burden on showing that Olmos teaches or suggests this limitation.

[24] The parties sometimes refer to Olmos's Figure 16 embodiment as the Figure 16-26 embodiment or the Figure 16-24 embodiment. *See, e.g.*, PO Resp. 7 (equating Olmos's "Figure 16-24 embodiment" and "Figure 16 Embodiment"); Pet. 83 (referring to "the Fig. 16-26 embodiment"), 118 (referring to "Fig. 16-24's embodiment"). We understand all of these terms to be interchangeable. For clarity and consistency, we refer to Olmos's embodiment depicted in its Figures 16 through 24 as the "Figure 16 embodiment."

reason to combine Olmos's Figure 8 and Figure 16 embodiments; and (2) that Olmos teaches or suggests the "complementary with one another" limitation in claims 10–14.

1. Brief Overview of Petitioner's Arguments

For the claimed "extension" recited in independent claims 1, 10, and 15, Petitioner points to "guide member 232" on Olmos's distal wedge member 208. Pet. 76; *see also id.* at 103, 114 (for claim limitations 10[f] and 15[g], cross-referencing arguments for limitation 1[h]). Petitioner highlights guide member 232 in blue in Petitioner's annotated version of Olmos's Figure 24B, reproduced below:

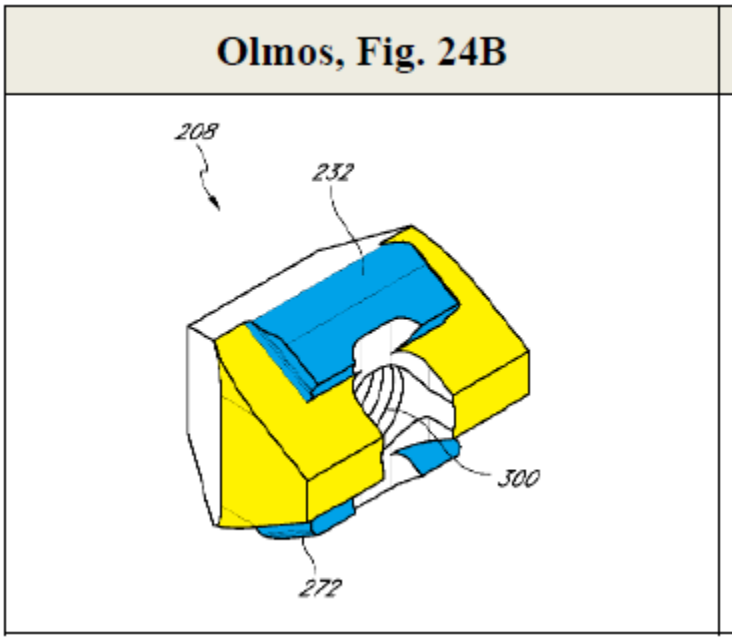

Pet. 76. Petitioner's annotated version of Olmos's Figure 24B shows Olmos's distal wedge member 208. Petitioner highlights "guide member 232" in blue and the structures flanking the guide member in yellow. *See id.* Petitioner maps distal wedge member 208 to the claimed "central ramp," "guide member 232" (blue) to the claimed "extension," and the structures

(yellow) flanking guide member 232 to the claimed "expansion portion." *See id.* at 75–76.

Petitioner then argues that "it would have been obvious to add a further extension to the central ramp," namely, Olmos's outer sleeve member 34 as depicted in Olmos's Figure 8. *Id.* at 77; *see also id.* at 77–79 (discussing outer sleeve member 34). We reproduce below Petitioner's annotated version of Olmos's Figure 8:

Olmos, Fig. 8

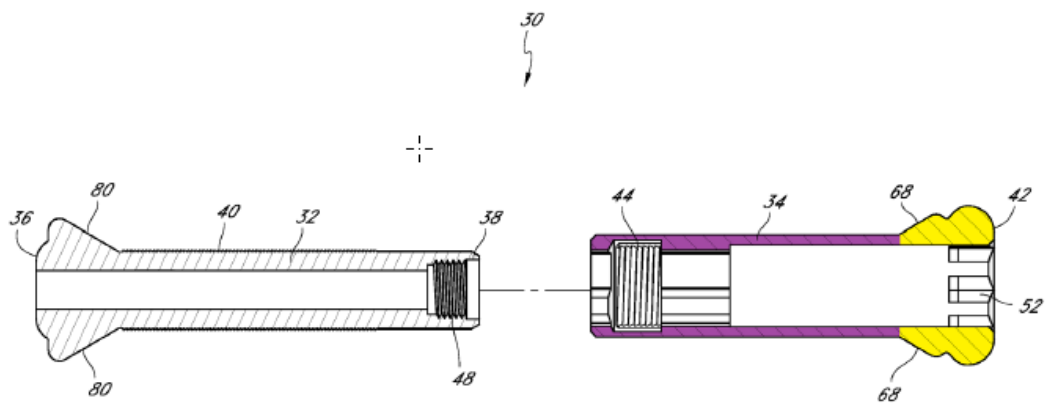

Pet. 78. Olmos's Figure 8 is a side cross-sectional view of actuator shaft 30. *See* Ex. 1006 (Olmos) ¶ 35. Actuator shaft 30 comprises two parts, i.e., "an outer sleeve member and an inner sleeve member." *Id.* Petitioner annotates Figure 8 to show outer sleeve member 34 in purple and the expansion portion in yellow. Pet. 78. Outer sleeve member 34 "extends longitudinally from an expansion portion of the driving ramp/proximal wedge," and has threading that engages threading on the inner sleeve member to permit expansion and contraction of the implant, similar to how the actuation member is used in the Figure 16 embodiment. *Id.*; Ex. 1006 (Olmos) ¶¶ 35, 81–82, 90, 106–107; Ex. 1002 (Drewry Decl.) ¶¶ 290–91.

Petitioner offers several reasons why a person of ordinary skill in the art would have used Figure 8's extension with the Figure 16 embodiment. Pet. 117–18. First, Petitioner argues that the extension "allows the actuator to engage with the distal wedge member/central ramp more quickly and over a greater distance, while allowing use of a shorter actuator/screw," which "would make the connection between the wedges stronger" and prevent the actuator from "stick[ing] out the far end of the central ramp when the device is expanded." *Id.* (citing, e.g., Ex. 1002 (Drewry Decl.) ¶¶ 292–93). Second, Petitioner argues that "adding Fig. 8's extension to Fig. 16-24's embodiment would preserve the structurally advantageous, interconnecting components of the primary embodiments." *Id.* at 118 (citing Ex. 1006 (Olmos) ¶ 156). Third, Petitioner argues that "an integrally-formed extension advantageously requires fewer parts, which facilitates both manufacturing and use." *Id.* (citing Ex. 1006 (Olmos) ¶ 107; Ex. 1002 (Drewry Decl.) ¶ 294).

Petitioner also asserts that the proposed combination "merely involves the combination of known mechanical elements that do not interact in any surprising or unexpected way, rendering the modification a simple, obvious substitution." Pet. 119 (citing *KSR*, 550 U.S. at 417). Petitioner further asserts that "Olmos expressly teaches that 'all features discussed in connection with any one embodiment herein can be readily adapted for use in other embodiments herein to form various combinations and sub-combinations,' and that integrally formed extensions like that in Fig. 8 are common and relatively simple to manufacture." *Id.* (citing Ex. 1006 (Olmos) ¶¶ 107, 188; Ex. 1002 (Drewry Decl.) ¶ 296). Petitioner notes that "during prosecution, the Examiner combined the embodiment of Figs. 16-26

with similar Olmos embodiments (e.g., Fig. 5)." *Id.* at 120 (citing Ex. 1004 (prosecution history), 63–64, 72–73, 132–33, 137–38); *see also id.* at 78–79.

Regarding the "complementary with one another" limitation in independent claim 10, Petitioner argues that Olmos teaches this limitation because it has endplates with ramped portions that "have the same angle, effectively mirroring each other." Pet. 102. This is illustrated in Petitioner's annotated version of Olmos's Figure 18, which we reproduce below:

Olmos, Fig. 18

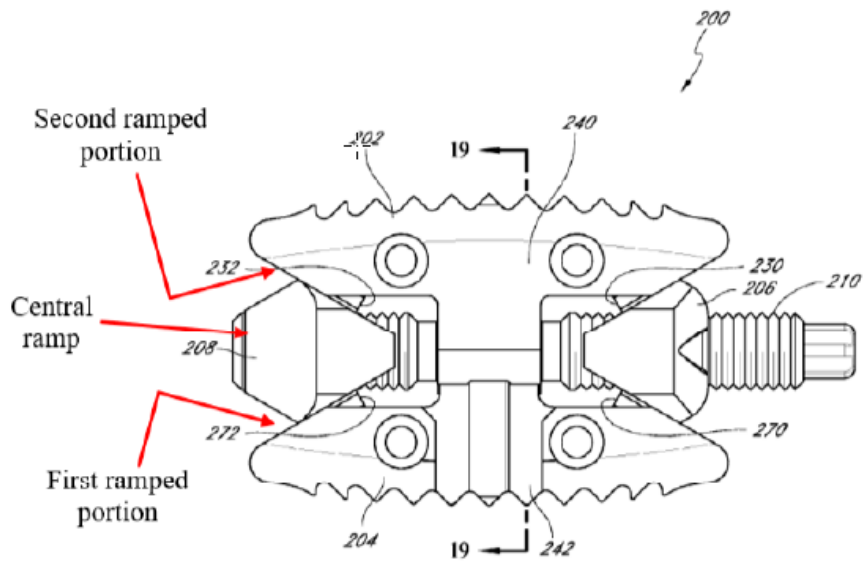

Id. Petitioner's annotated version of Olmos's Figure 18 shows an intervertebral implant with red arrows pointing to (1) the central ramp/distal wedge member 208, and (2) the first and second endplates having first and second ramped portions. *See id.*; *see also* Ex. 1002 (Drewry Decl.) ¶¶ 380–82.

With this brief overview, we turn to analyzing the disputed issues between the parties.

2. Whether Petitioner Has Adequately Demonstrated that a Person of Ordinary Skill in the Art Would Have Had a Reason to Use Olmos's Figure 8 Extension With Olmos's Figure 16 Embodiment

After consideration of all the arguments and cited evidence of record, we find that Petitioner has demonstrated by a preponderance of the evidence that a person of ordinary skill in the art would have had a reason to use Olmos's Figure 8 extension with Olmos's Figure 16 embodiment. First, we agree with Petitioner that Olmos expressly suggests combining its various embodiments, including by using Figure 8's extension with the Figure 16 embodiment. Pet. 119–20; Pet. Reply 28–29; Ex. 1006 (Olmos) ¶¶ 174, 188; Ex. 1002 (Drewry Decl.) ¶ 296; Ex. 1036 (Drewry Reply Decl.) ¶¶ 117–21. We find that Olmos's express teaching is a sufficient basis on which to credit Petitioner's motivation to combine argument.

Second, we additionally agree with Petitioner that the proposed combination "merely involves the combination of known mechanical elements that do not interact in any surprising or unexpected way, rendering the modification a simple, obvious substitution." Pet. 119; Ex. 1002 (Drewry Decl.) ¶ 296. The record shows that it was common in the art to use an extension like that in Olmos's Figure 8 to threadingly engage the actuation member and cause expansion and contraction of the implant. *See* Pet. 119–20; Ex. 1006 (Olmos) ¶ 107; Ex. 1007 (Baynham) ¶ 29 (threaded tube 27, visible in Fig. 3); *see also* Pet. 64–65 and Ex. 1002 (Drewry Decl.) ¶¶ 247–49 (discussing Baynham's extension/threaded tube). Olmos teaches that such an extension could be substituted in place of a threaded actuator that lacks such an extension. *See* Ex. 1006 (Olmos) ¶ 174.

Because Petitioner's proposed combination is no more than "the predictable use of prior art elements according to their established

functions," we find that this is an additional reason why Petitioner has adequately demonstrated a sufficient motivation to combine with a reasonable expectation of success. *See KSR*, 550 U.S. at 417; *see also Bos. Sci. Scimed, Inc. v. Cordis Corp.*, 554 F.3d 982, 991 (Fed. Cir. 2009) ("Combining two embodiments disclosed adjacent to each other in a prior art patent does not require a leap of inventiveness.").

Finally, we also agree with Petitioner that a person of ordinary skill in the art would have been motivated to use the Figure 8 extension because it "allows the actuator to engage with the distal wedge member/central ramp more quickly and over a greater distance, while allowing use of a shorter actuator/screw." Pet. 117–18. Petitioner demonstrates that a person of ordinary skill in the art would have understood that this "would make the connection between the wedges stronger" and reduce the risk of the actuator protruding from the far end of the central ramp when the device is expanded. *See, e.g.*, Pet. 118; Pet. Reply 29–35; Ex. 1002 (Drewry Decl.) ¶¶ 292–93; Ex. 1036 (Drewry Reply Decl.) ¶¶ 97–106.

We discuss our reasoning in more detail below, in addressing Patent Owner's arguments.

a. Olmos's Express Teachings

Patent Owner disputes that Olmos expressly teaches combining the Figure 8 extension with the Figure 16 embodiment. PO Resp. 52; PO Sur-reply 22. First, Patent Owner argues that Olmos "only generically states that features *could* be combined without any discussion of the simplicity or complexity of said combinations." PO Resp. 52. According to Patent Owner, "it is readily apparent that there are many features in Olmos' embodiments that would simply be impossible or impractical to implement

in other Olmos embodiments, lending little credibility to Petitioner's position that every feature disclosed in Olmos is automatically obvious and easily combinable with every other embodiment." *Id.* (citing Ex. 2013 (Culbert Decl.) ¶ 119).

Patent Owner's argument is unavailing. Patent Owner raises certain alleged drawbacks of adding an extension (i.e., problems with sufficient osseointegration and device visibility, discussed below), but does not show that Petitioner's proposed combination would be "impossible or impractical to implement." PO Resp. 52. Nor does the record reflect any such impossibility or impracticality. Instead, as discussed above, the record shows it was common in the art to use an extension like that in Olmos's Figure 8 to threadingly engage the actuation member and cause expansion and contraction of spinal implants. This is also consistent with Olmos itself, which states: "The actuator shaft 30 can be utilized in several embodiments to provide numerous advantages, such as facilitating precise placement, access, and rapid deployment of the intervertebral implant 10." Ex. 1006 (Olmos) ¶ 81.

Additionally, as discussed above, we agree with Petitioner that Olmos includes an express teaching to combine Figure 8's extension with the Figure 16 embodiment. In discussing the Figure 16 embodiment, Olmos states:

> [A]lthough this embodiment is described and illustrated as having the actuator shaft 210 with threads 294, it is also contemplated that relative movement of the wedge members can be achieved through the use of the actuator shaft 30 described in reference to FIGS. 5-6, and that such an actuator shaft could likewise be used with the embodiment shown in FIGS. 16A-19.

Ex. 1006 (Olmos) ¶ 174. As noted above, Olmos teaches that "actuator shaft 30" comprises an outer sleeve member and an inner sleeve member. *Id.* ¶¶ 35, 82. We agree with Petitioner that Olmos's paragraph 174 is an express teaching to use the actuator assembly Figure 8[25] with the Figure 16 embodiment. Pet. Reply 28–29; Ex. 1036 (Drewry Reply Decl.) ¶¶ 117–121.

Patent Owner argues that whether Olmos contains an express suggestion to combine the Figure 8 and 16 embodiments is an improper new theory on Reply. PO Sur-reply 22. We disagree.

The Petition argues that Olmos contains an express suggestion to combine its various embodiments. Pet. 119–20 ("Olmos expressly teaches that 'all features discussed in connection with any one embodiment herein can be readily adapted for use in other embodiments herein to form various combinations and sub-combinations' . . . .") (quoting Ex. 1006 (Olmos) ¶ 188). It is true, as Patent Owner points out, that the Reply cites an additional paragraph of Olmos (¶ 174) that more particularly teaches or suggests Petitioner's proposed combination. *See* Pet. Reply 28–29. We

[25] Although Olmos's paragraph 174 refers to Figures 5 and 6 instead of Figure 8, the record reflects that "the actuator assembly structure in Figure 8 is interchangeable with that described in Figures 5-6." The embodiments differ primarily in that in Figures 5 and 6, proximal wedge member 68 is formed separately from outer sleeve member 34, whereas in Figure 8, these members are integrally formed. *See* Ex. 1006 (Olmos) ¶¶ 106–07; Pet. 79 n.6 ("Olmos teaches that Fig. 8 is an alternative embodiment of the same invention depicted in Fig. 5 . . . ."); Pet. Reply 28–29; Ex. 1036 (Drewry Reply Decl.) ¶ 118 (citing Ex. 1041 (Culbert Depo. Tr.), 164:2–165:15 (agreeing that the two-piece actuator assembly in Figure 8 can replace the four-piece design in Figures 5 and 6).

find, however, that Petitioner's citation of this additional paragraph on reply is both an elaboration on the Petition's argument that Olmos contains an express teaching to combine (Pet. 119–20), and a permissible response to Patent Owner's argument that Olmos "only generically states that features *could* be combined," as opposed to specifically motivating Petitioner's asserted combination. *See* PO Resp. 52; *see also Corephotonics, Ltd. v. Apple Inc.*, 84 F.4th 990, 1008 (Fed. Cir. 2023) ("'there is no blanket prohibition against the introduction of new evidence during an IPR,' provided it is an 'expan[sion] on and . . . fair extension of . . . [a] previously raised . . . argument' and has a 'nexus' (and is therefore responsive) to an argument made by the patent owner or the Board") (quoting *Rembrandt Diagnostics*, 76 F.4th at 1384–85) (alterations in original).

Patent Owner also argues that "the so-called express teaching merely states that the ***actuator*** shaft 30 (on *proximal* wedge 68) can be used in the Figure 16 embodiment, which would require replacing the ***actuator*** 210. Doing so would not result in an extension on the *distal* wedge of Figure 16 as suggested, absent hindsight bias." PO Sur-reply 22. This argument is unavailing.

Petitioner asserts that although Olmos's Figures 5 and 8 illustrate the outer sleeve member stemming from the proximal wedge/driving ramp rather than from the distal wedge/central ramp, "[t]hese configurations are simple mirror images of each other, with no difference in their functionality or purpose." Pet. 118–19 (citing Ex. 1002 (Drewry Decl.) ¶ 295). According to Petitioner, "[a]dding a threaded extension to the distal wedge/central ramp would have been most logical for a POSITA considering the advantages of embodiment(s) of Figs. 16-26, simply because

the actuator in those figures is inserted through the proximal wedge/driving ramp." *Id.* We adopt Petitioner's undisputed analysis as our own. *See* Pet. 118–19; Ex. 1002 (Drewry Decl.) ¶¶ 295–96.

For the above reasons, we find that Patent Owner's arguments do not undermine Petitioner's showing that Olmos expressly motivates Petitioner's proposed combination.

b. Simple Substitution

As to Petitioner's argument that using Figure 8's extension with the Figure 16 embodiment would have been a "simple, obvious substitution" (Pet. 119), Patent Owner argues that "the simple substitution rationale does not apply," because "'substitution' refers to replacing a first thing for a second thing," and here "Petitioner does not propose replacing an existing component, but instead proposes adding an extension." PO Resp. 51 (citing *Apple Inc. v. Samsung Elecs. Co., Ltd.*, 839 F.3d 1034 (Fed. Cir. 2016) ("[T]he simple substitution of one known element ***for another*** makes the claimed invention obvious.")). We find that Patent Owner views Petitioner's argument too narrowly. Petitioner proposes to change the actuator assembly depicted in Olmos's Figure 16 embodiment to instead use Figure 8's extension and a shorter actuator/screw. Pet. 77–80, 117–18. This qualifies as substituting a first thing (the Figure 16 actuator assembly) for a second thing (Figure 8's extension and a shorter actuator/screw).

Patent Owner also argues that "no proposed structural modification to a spinal implant this substantial can be said [to] involve 'simple substitution,'" because "[m]aking even minor modifications to a spinal fusion implant can adversely affect many other aspects of the design." PO Resp. 51 (citing Ex. 2013 (Culbert Decl.) ¶ 116). But as we discussed

above, Petitioner's proposed combination is no more than the predictable use of prior art elements according to their established functions. Patent Owner mentions two potential adverse effects on the implant design that could arise from the combination, i.e., having to "remov[e] material from the plates so the extension fits within the implant when collapsed," and "reduc[ing] the effectiveness of osseonintegration [sic]." PO Resp. 51 (citing Ex. 2013 (Culbert Decl.) ¶¶ 117–18).

Patent Owner appears to be arguing that a person of ordinary skill in the art would not have had a reasonable expectation of success in making the proposed modification, given these potential adverse effects. As to Patent Owner's concern regarding removing material from the plates, Patent Owner fails to establish that this speculative concern would have undermined a person of ordinary skill in the art's reasonable expectation of achieving a spinal implant as claimed. *See* PO Resp. 51. In fact, Patent Owner's expert Mr. Culbert expressly acknowledges that even if a person of ordinary skill in the art had to remove material from the implant to accommodate the extension, the implant's structural integrity could be maintained by "bolstering other aspects of the implant." Ex. 2013 (Culbert Decl.) ¶ 117.

As to potentially reducing the effectiveness of osseointegration, the reasonable expectation of success requirement relates to "achieving what is claimed in the patent-at-issue." *Intelligent Bio-Sys., Inc. v. Illumina Cambridge Ltd.*, 821 F.3d 1359, 1367 (Fed. Cir. 2016). The challenged claims do not recite any limitations directed to osseointegration or long-term stability of the implant within the patient. Accordingly, this potential adverse effect flowing from Petitioner's proposed combination is also unavailing.

For the above reasons, we find that Patent Owner's arguments do not undermine Petitioner's showing that adding Olmos's Figure 8 extension to the Figure 16 embodiment would have been a simple, obvious substitution.

c. Risk of Protrusion

Patent Owner disputes that a person of ordinary skill in the art would have been motivated to make Petitioner's asserted combination based on an alleged risk of the actuator protruding from the far end of the central ramp. PO Resp. 36–40. On the full trial record, we find Patent Owner's argument unavailing, because Patent Owner misconstrues the Figure 16 embodiment on which Petitioner relies. Once Petitioner's proposed combination is properly understood, we agree with Petitioner that its proposed combination provides benefits over the Figure 16 embodiment, namely allowing the use of a shorter actuator/screw and thus reducing the risk of actuator protrusion, which would have motivated a person of ordinary skill in the art to make the proposed combination. Pet. 117–18.

More specifically, Patent Owner argues that in Olmos's Figure 16 embodiment, protrusion is not a problem because the distal wedge has an "elongated portion . . . that provides extended threading," which "ensure[s] that the actuator 210 does not protrude from the distal wedge when the implant is fully expanded." PO Resp. 35–36. Patent Owner argues that Olmos's Figures 16B and 18 "depict the implant in the 'expanded state'" and show that "actuator 210 clearly does not protrude," "[n]or can it, as the implant includes motion limiting structures . . . to prevent further expansion." *Id.* at 38 (citing, e.g., Ex. 2013 (Culbert Decl.) ¶ 96; Ex. 1006 (Olmos) ¶¶ 52, 54, 158, 171). As such, Patent Owner asserts that "Petitioner's obviousness theory is . . . premised on addressing a 'protrusion'

issue that simply does not exist." *Id.* at 39; *see also* Ex. 2013 (Culbert Decl.) ¶¶ 94–97.

The problem with Patent Owner's argument is that it is based on Olmos's Figure 16 embodiment having "a dual-threaded actuator for movement of the ***two wedges***." PO Resp. 32–33 (emphasis added); *see also id.* at 32–36 (describing Patent Owner's understanding of Olmos's Figure 16 embodiment as having threaded engagement of each wedge to move both ramps/wedges). The Petition, however, relies on an embodiment of Figure 16 where the actuator is "axially-fixed relative to one wedge," and thus moves only ***one wedge***. *See* Pet. 84 (citing, e.g., Ex. 1006 (Olmos) ¶ 159 ("in other embodiments, at least a portion of the actuator shaft can be ***axially fixed*** relative to one of the proximal and distal wedge members 206, 208 with the actuator shaft being operative to move the other one of the proximal and distal wedge members 206, 208") (emphasis added)); *see also* Pet. Reply 27–28 (arguing that Patent Owner "ignore[s] the Petition's reliance on . . . an embodiment where the actuator is 'axially-fixed' relative to one ramp"); Ex. 1036 (Drewry Reply Decl.) ¶¶ 98–99 (reiterating reliance on Olmos's disclosure of a single-threaded actuator that moves one wedge).

This difference in embodiments is important to the parties' arguments, because, as Petitioner persuasively establishes, a person of ordinary skill in the art would have recognized a greater risk of actuator protrusion when using an axially-fixed actuator that moves one wedge (a single-threaded actuator) as compared to an actuator that moves both wedges (a double-threaded actuator). *See* Pet. Reply 29–32.[26] This is because "a single-

[26] Patent Owner asserts that Petitioner's Reply "improperly exceeds scope" by arguing that "Olmos' modified design would have a protrusion problem,

threaded actuator must be long enough to engage the central ramp in the collapsed position, but will move twice as far relative to the central ramp during expansion as compared to a double-threaded actuator." Pet. Reply 29; Ex. 1036 (Drewry Reply Decl.) ¶¶ 99–100. This creates a risk that the actuator will protrude beyond the end of the central ramp, even if the central ramp has an elongated body portion with extended threading. *See* Pet. Reply 29–30; Ex. 1036 (Drewry Reply Decl.) ¶¶ 99–101.

As Petitioner persuasively establishes, a person of ordinary skill in the art would have recognized that adding Figure 8's extension to the central ramp would allow use of a shorter actuator, thereby mitigating the protrusion risk. Pet. 117–18; Ex. 1002 (Drewry Decl.) ¶¶ 292–93; Pet. Reply 29–32; Ex. 1036 (Drewry Reply Decl.) ¶¶ 102–05. Notably, both parties' experts agree that protruding actuators are problematic because they can encroach on adjacent tissues, blood vessels, and nerves. *See* Ex. 1002 (Drewry Decl.) ¶ 252; Ex. 1041 (Culbert Depo. Tr.), 17:8–18:4, 22:5–23:10.

Patent Owner argues that even if a person of ordinary skill in the art "had unreasonably believed that additional threaded engagement could

---

despite providing no such evidence or explanation in the Petition." PO Sur-reply 23. We disagree and find that Petitioner's discussion of the protrusion problem is both a permissible expansion of arguments already made in the Petition, and a proper reply to arguments in Patent Owner's Response. *See Corephotonics, Ltd.*, 84 F.4th at 1008. The Petition identifies a concern with the actuator "stick[ing] out the far end of the central ramp." Pet. 117–18. As we discussed above, in attempting to rebut Petitioner's argument, Patent Owner misdescribed Petitioner's proposed combination. Under the circumstances here, we find that Petitioner's Reply both appropriately elaborates on its argument in the Petition and responds to Patent Owner's counterarguments related thereto.

prevent distal protrusion, he or she would have simply added more threading . . . by extending the threading to the proximal end of the distal wedge 208." PO Resp. 39–40. Mr. Culbert asserts that an ordinarily skilled artisan would have elected this approach over adding an extension, because an extension would unnecessarily occupy critical space for bone graft. Ex. 2013 (Culbert Decl.) ¶ 98.

This argument is unavailing. First, Patent Owner does not adequately explain how this approach would have reduced the risk of protrusion. For example, as Mr. Drewry points out, adding threading in the wedge would not allow for the use of a shorter actuator. Ex. 1036 (Drewry Reply Decl.) ¶ 110. Second, even if this approach were viable and/or better, it would not negate Petitioner's approach of adding an extension. "[J]ust because better alternatives exist in the prior art does not mean that an inferior combination is inapt for obviousness purposes." *See In re Mouttet*, 686 F.3d 1322, 1334 (Fed. Cir. 2012). We also note that during deposition Mr. Culbert agreed that one way to "modify Olmos to ensure that the actuator doesn't protrude out of the back of the central ramp" is to "make the central ramp bigger . . . in the axial direction." Ex. 1041 (Culbert Depo. Tr.) 230:3–231:1 (cited at PO Sur-reply 24). This testimony appears to be consistent with Petitioner's argument that a person of ordinary skill in the art would have added Olmos's Figure 8 extension to the distal wedge member/central ramp in the Figure 16 embodiment to reduce the risk of protrusion. Pet. 117–18.

On Sur-reply, Patent Owner argues that Petitioner's proposed combination of Olmos embodiments would "closely resemble" Chung's design, and there is no protrusion problem with Chung. PO Sur-reply 23–24. This argument is unavailing. Even assuming there is no protrusion

problem with Chung, Patent Owner does not establish that what is true of Chung's implant would necessarily be true of Petitioner's proposed combination based on Olmos. Patent Owner bases its argument on Mr. Drewry's statement that "the proposed single-threaded actuator design of Olmos 'more closely resemble[s] the actuator in Chung than the dual-threaded actuator' shown in Figure 16." *Id.* at 23 (quoting Ex. 1036 (Drewry Reply Decl.) ¶ 98). Patent Owner mischaracterizes this statement. Mr. Drewry does not say that Petitioner's proposed combination of Olmos embodiments "more closely resemble[es]" Chung's ***design***, as Patent Owner suggests. *See* PO Sur-reply 23–24. Rather, Mr. Drewry refers to Olmos's single-threaded ***actuator***, and says it "functionally would more closely resemble" Chung's single actuator than Olmos's dual-threaded actuator. *See* Ex. 1036 (Drewry Reply Decl.) ¶ 98.

For the above reasons, we find that Patent Owner's arguments do not undermine Petitioner's showing that a person of ordinary skill in the art would have been motivated to add Olmos's Figure 8 extension to the Figure 16 embodiment to reduce the risk of actuator protrusion.

d. Stronger Connection Between the Wedges/Ramps

Patent Owner disputes the sufficiency of Petitioner's argument that a person of ordinary skill in the art would have been motivated to make Petitioner's asserted combination to "make the connection between the wedges stronger." PO Resp. 40–48; Pet. 118. Patent Owner argues that beyond a certain point, adding threaded engagement between the wedge and actuator "has no noticeable or appreciable [e]ffect on the strength of the threaded connection, because the bolt [actuator] will fail for reasons unrelated to the threaded engagement (e.g., the bolt will simply break in

half)." PO Resp. 41; Ex. 2013 (Culbert Decl.) ¶¶ 99–109. Patent Owner asserts that "the strength of the threaded engagement out of Olmos is already well beyond the point of absolute diminishing returns for connection strength." PO Resp. 46; Ex. 2013 (Culbert Decl.) ¶ 109.

On this record, we find that Petitioner shows by a preponderance of the evidence that a person of ordinary skill in the art would have been motivated to use Olmos's Figure 8 extension in Olmos's Figure 16 device in order to allow the actuator to engage with the distal wedge member/central ramp more quickly and over a greater distance, which in turn would make the connection between the wedges stronger. *See, e.g.*, Pet. 117–18; Ex. 1002 (Drewry Decl.) ¶¶ 292, 251–52. Petitioner persuasively explains that the threads are under maximum stress when the user first starts to rotate the actuator to expand the device, and thus a person of ordinary skill in the art would have understood that a quicker (earlier) engagement between the actuator and wedge member would disperse the forces across a greater area and mitigate the risk of failure. *See* Pet. Reply 32–33; Ex. 1036 (Drewry Reply Decl.) ¶¶ 85, 106, 108.[27] We also agree with Petitioner that having

[27] Patent Owner argues that on page 33 of its Reply, Petitioner improperly incorporates by reference paragraphs 83–93 of Mr. Drewry's Reply Declaration (Ex. 1036). Of the cited range, we cite only paragraphs 85 and 87, which we find are not improperly incorporated by reference. Paragraph 85 provides appropriate explanation for the statement in the Reply that the threads are under maximum stress when a surgeon first starts to rotate the actuator to expand the device. Pet. Reply 33. Paragraph 87 (discussed below) provides helpful explanation as to why Mr. Culbert's analysis, which was based on Olmos's implant in the expanded state, did not adequately respond to Petitioner's argument, which applies to the implant in the unexpanded state. Pet. 117–18.

the actuator engage with the distal wedge member/central ramp over a greater distance would "improve connection strength by supporting the actuator shaft against shear and bending forces."[28] Pet. Reply 33; Pet. 117–18; Ex. 1002 (Drewry Decl.) ¶¶ 292, 251–52; Ex. 1036 (Drewry Reply Decl.) ¶ 108.

Patent Owner's argument that additional threaded engagement would have no appreciable effect on the strength of the connection is unavailing. *See, e.g.*, PO Resp. 40–41; Ex. 2013 (Culbert Decl.) ¶¶ 99–109. As Petitioner and Mr. Drewry demonstrate, Patent Owner's analysis "only focuses on the Olmos and Chung devices in their expanded states," while "ignor[ing] the relatively low degree of threaded engagement in the initial collapsed state." Ex. 1036 (Drewry Reply Decl.) ¶ 87 (explaining that Mr. Culbert's calculations are based on Olmos's Fig. 18, which shows the device in its expanded state); Pet. Reply 32–33.

Patent Owner argues that Petitioner's emphasis on the "early stages of expansion" is a "new theory not in the Petition." PO Sur-reply 24. We disagree. The Petition states that "Fig. 8's extension allows the actuator to

[28] Patent Owner argues that Petitioner's argument regarding supporting the actuator shaft against shear and bending forces is an improper new argument first made on Reply. PO Sur-reply 25–26. We disagree. Mr. Drewry raised this issue in his original declaration (Ex. 1002) at paragraph 251, which Petitioner cites in connection with its argument regarding a motivation to combine Olmos's embodiments. *See* Pet. 117–18. Although Mr. Drewry's paragraph 251 addresses Petitioner's proposed combination of Chung and Baynham, based on Petitioner's citation of this paragraph in connection with its obviousness argument based on Olmos, we find it sufficiently clear that Petitioner was arguing that benefits of extensions Mr. Drewry discusses in paragraph 251 apply to extensions generally (not just Baynham's extension).

engage with the distal wedge member/central ramp ***more quickly***," i.e., in the early stages of expansion. Pet. 117 (emphasis added).

Patent Owner also asserts that maximum stress occurs not at the early stages of expansion, but after surgery, when the implant is at its most expanded and the patient is upright. PO Sur-reply 24. Patent Owner does not support this assertion with citation to evidence of record. But even if the assertion were true, it does not change the fact shown by Petitioner's evidence that the actuator threads will also experience significant stress when the user first starts to rotate the actuator. Pet. Reply 33; *see also* Ex. 1036 (Drewry Reply Decl.) ¶ 86 ("even if the highest stresses are not always seen at this point in the process, a designer has to plan for this possibility which will occur in real-life operations at least some of the time").

Patent Owner also disputes that the actuator threads experience significant stress at the start of actuator rotation, because, as Patent Owner argues, the implant will have "significant clearance upon insertion." PO Sur-reply 24–25. We understand that by "clearance," Patent Owner is referring to the space between the implant and the adjacent vertebrae. Patent Owner asserts that Olmos's Figure 1, reproduced below, shows this "significant clearance":

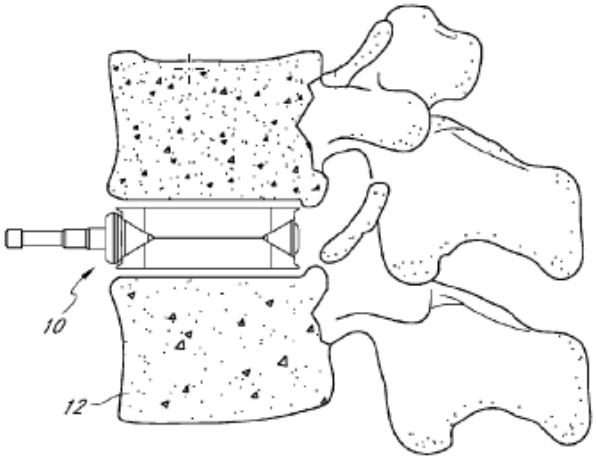

FIG. 1

Id. Olmos describes its Figure 1 as "a side view of an intervertebral implant in an unexpanded state while positioned intermediate adjacent vertebrae." Ex. 1006 (Olmos) ¶ 28. Patent Owner's argument is unavailing because we are not directed to any persuasive evidence that Olmos's Figure 1 accurately shows the "clearance" surgeons would have typically experienced upon insertion of Olmos's implant.

Patent Owner also argues that Petitioner's arguments are "undermined by Petitioner's own published patent application (filed years after the '731 Patent) showing minimal threaded engagement in the collapsed state." PO Sur-reply 25. Patent Owner cites Figure 79 of Petitioner's patent application (Butler, Ex. 2024), reproduced below:

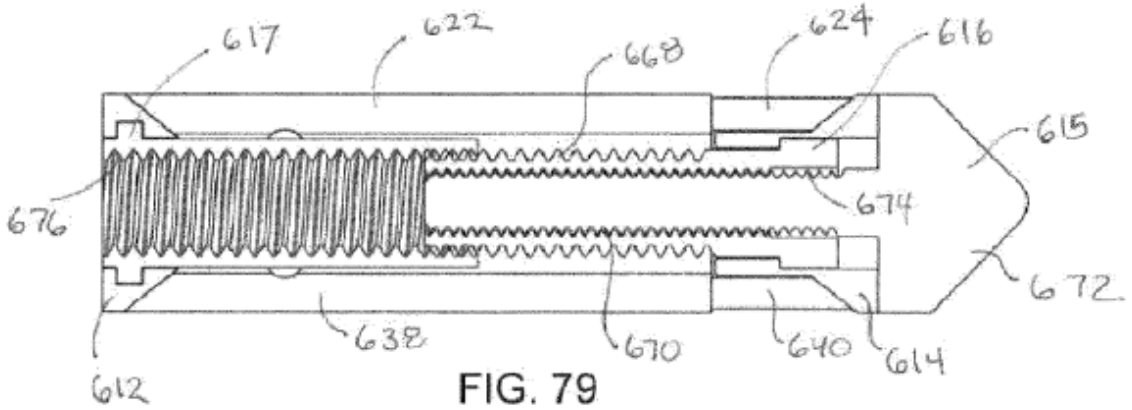

FIG. 79

PO Sur-reply 25 (citing Ex. 2024 (Butler) ¶ 98, Fig. 79). Butler Figure 79 shows a view of an expandable implant in a collapsed state. Ex. 2024 (Butler) ¶¶ 23, 98. Patent Owner's brief reference to this figure lacks the detail necessary to persuasively show whether the depicted implant has "minimal" threaded engagement in the collapsed state, or whether it has sufficient similarity to the proposed Olmos combination to enable an appropriate comparison. Accordingly, we find Patent Owner's argument based on Petitioner's patent application unavailing.

In sum, for the reasons discussed above, we find that Patent Owner's arguments do not undermine Petitioner's showing that a person of ordinary skill in the art would have been motivated to add Olmos's Figure 8 extension to the Figure 16 embodiment to make the connection between the wedges stronger.

e. Comparing Benefits and Drawbacks

Patent Owner argues that "Petitioner's obviousness theory cannot succeed" because "[i]n determining whether a proposed modification would have been obvious, Petitioner was required to compare the benefits and drawbacks of the modification," but did not do so. PO Resp. 56, 52–53 (citing *Arctic Cat Inc. v. Polaris Indus.*, 795 F. App'x 827, 833 (Fed. Cir.

2019)); *see also* PO Resp. 32 (arguing that "Petitioner ignores the well-known drawbacks that would accompany adding an extension"). This argument is unavailing, because Patent Owner mischaracterizes *Arctic Cat*. That case indicates that it is the "***Board*** [who] must weigh the benefits and drawbacks of the modification against each other." *Arctic Cat Inc.*, 795 F. App'x at 833. Patent Owner points us to no case law indicating that Petitioner must anticipate and preemptively address (in the Petition) alleged drawbacks Patent Owner might later raise at trial in the *inter partes* review.[29]

Nor has Patent Owner established that the two alleged drawbacks it identifies would have outweighed the benefit of employing the extension. First, Patent Owner argues that "adding an extension would have occupied valuable space" for bone graft material, which is used to improve fusion and healing. PO Resp. 53 (citing Ex. 2013 (Culbert Decl.) ¶¶ 121–23; Ex. 2023 (Kandziora), 14; Ex. 2022 (Wiggins), 14–15; Exs. 2027–2030 (Life Spine press releases and marketing materials); Ex. 2021 (Opticage brochure)). Second, Patent Owner argues that, "assuming [the extension] will be metal," there will be "a loss in fluoroscopy imaging quality" when physicians attempt to observe the progress of healing, because "x-rays cannot penetrate

[29] This is not to suggest that a petition may leave out information necessary to make a prima facie case of unpatentability, but our procedures also allow a petitioner to reply, including with new evidence, to arguments developed at trial. *See* Consolidated Trial Practice Guide 73–75, *available at* https://www.uspto.gov/TrialPracticeGuideConsolidated. On the facts here, the alleged drawbacks of the asserted combination of references identified in Patent Owner's Response are in the latter category and are appropriate for development through additional argument and evidence on reply.

through metal." PO Resp. 55 (citing Ex. 2013 (Culbert Decl.) ¶ 124; Exs. 2027–2030 (Life Spine press releases and marketing materials)[30]). Patent Owner concludes:

> In view of these known disadvantages, a POSITA would not have been motivated to add an extension to Olmos' Figure 16 Embodiment *unless* he or she determined that any potential improvement provided by the extension would at least equal the benefits of having additional open volume, particularly the significant benefit of having additional bone graft volume to facilitate long-term structural stability of the vertebrae.

PO Resp. 55–56.

Patent Owner is correct that the art recognized a tradeoff between implant volume (i.e., the amount of space occupied by the physical material of the implant) and the availability of space for bone graft material. *See, e.g.*, PO Resp. 53–54; Ex. 2023 (Kandziora), 14 ("one important biological factor for a fusion cage is to have the smallest possible cage volume and as a result to allow the maximum graft filling of the intervertebral space"); Ex. 2022 (Wiggins), 14–15 ("the optimal environment for fusion using cages would include . . . [u]se of the smallest cage volume (as cage volume increases, graft volume decreases) that will provide mechanical stability"); Ex. 2013 (Culbert Decl.) ¶¶ 121–22. The art also recognized that "more bone graft is expected to provide improved fusion." Ex. 2013 (Culbert Decl.) ¶ 122.

Nevertheless, the evidence of record does not show that "adding even a small extension would ***necessarily*** reduce the effectiveness of

[30] Patent Owner also cites "Ex. 2031, 1," but in this proceeding Patent Owner did not file an Exhibit 2031.

osseonintegration [sic] and affect the long-term stability of the implant in a patient." PO Resp. 51–52 (emphasis added). Instead, we agree with Petitioner that "a POSITA would not understand the minimal volume preserved by omitting an elongated extension to be meaningfully beneficial." Pet. Reply 34. Petitioner's argument is consistent with the evidence of record. For example, despite post-dating Patent Owner's references discussing the tradeoff between implant volume and space for bone graft material, the art still taught use of elongated extensions.[31] *See* Pet. Reply 34, 35; *see also id.* at 23 (quoting Ex. 1007 (Baynham) ¶ 28; citing *id.* ¶¶ 25–26); Ex. 1036 (Drewry Reply Decl.) ¶ 79).

In our Institution Decision, we explained that Patent Owner's drawback argument could be strengthened if it "specifically address[ed] the volume of bone graft material needed to facilitate natural integration of the expandable implant, as compared to the space occupied by the proposed elongated extension." Inst. Dec. 47. The full trial record does not include such a comparison. In short, the record does not demonstrate that Patent Owner's alleged drawback caused by Olmos's Figure 8 extension taking up space would outweigh the benefits Petitioner articulated of that extension.

We also find Patent Owner's argument "that an elongated extension would interfere with fluoroscopy (POR, 55)" unavailing. We agree with

---

[31] Patent Owner's references discussing the tradeoff between implant volume and space for bone graft material predate the '731 patent and Olmos, and were published in the same year as Baynham's earliest possible priority date. *See* Tr. 62:14–15; *compare* Ex. 2023 (Kandziora), 3 (2004 copyright) and Ex. 2022 (Wiggins), 2 (2003 copyright), *with* Ex. 1001, code 22 (2010 filing date), Ex. 1006 (Olmos), code 60 (earliest possible filing date of 2006), and Ex. 1007 (Baynham), code 63 (earliest possible filing date of 2004).

Petitioner that "every Olmos embodiment has significant material in and around the central cavity," and that "in the relied-on Figure 16 embodiment, the endplates' upper and lower side portions 240/242 already significantly impair visibility into the central cavity." Pet. Reply 36; Ex. 2036 (Drewry Reply Decl.) ¶ 116; Ex. 1006 (Olmos) ¶ 157, Figs. 16A, 16B, 18. We are not persuaded that "adding an elongated extension" would "impede visibility any more than Olmos's already-existing features." Pet. Reply 36. Moreover, to the extent an extension would have presented a visualization problem, the art taught means of improving visualization, such as by incorporating non-metal, radiolucent materials. *See, e.g.*, Ex. 1006 (Olmos) ¶ 154 ("[T]he implant 200 can be at least partially radiolucent, which radiolucency can allow a doctor to perceive the degree of bone growth around and through the implant."); Ex. 2028 (Petitioner's product marketing material touting "[r]adiopague tantalum rod markers [that] improve intraoperative visualization").

In sum, the record does not show that the alleged drawbacks of reduced space for bone graft material and potential interference with fluoroscopy would have negated a person of ordinary skill in the art's reasons for using Olmos's Figure 8 extension with Olmos's Figure 16 embodiment as demonstrated by Petitioner. Nor is there persuasive evidence of record that these alleged drawbacks would have overridden the anticipated benefits of the proposed combination (e.g., permitting use of a shorter screw to reduce the risk of protrusion, and strengthening the connection). *See, e.g.*, *Medichem, S.A. v. Rolabo, S.L.*, 437 F.3d 1157, 1165 (Fed. Cir. 2006) ("[A] given course of action often has simultaneous

advantages and disadvantages, and this does not necessarily obviate motivation to combine.”).

f. Petitioner’s Additional Arguments

For completeness, we address three arguments Petitioner made that we do not agree with, and thus do not rely on as a basis for our decision. First, as to Petitioner’s argument that adding an extension to the Figure 16 embodiment would “preserve the structurally advantageous, interconnecting components of the primary embodiments” (Pet. 117), we agree with Patent Owner that “the fact that a newly added feature would not undermine or adversely affect existing features in a device does not provide a *reason* or *rationale* to add the new feature in the first place.” PO Resp. 49. Accordingly, we do not rely on this argument offered by Petitioner.

Second, Petitioner argues that a person of ordinary skill in the art would have been motivated to add an extension to the Figure 16 embodiment because “an integrally-formed extension advantageously requires fewer parts, which facilitates both manufacturing and use.” Pet. 118. We agree with Patent Owner that this argument is unavailing. PO Resp. 50. Petitioner’s combination entails adding an extension (from Figure 8) to an embodiment lacking one (Figure 16). We agree with Patent Owner that adding a new component (whether separately or integrally) can in some instances complicate manufacturing/assembly and increase costs. *See id.* (citing Ex. 2013 (Culbert Decl.) ¶ 115). Petitioner has not sufficiently demonstrated that the proposed combination in this instance would reduce complexity or facilitate the manufacturing process. Accordingly, we do not rely on this argument offered by Petitioner.

Third, regarding Petitioner's argument that the Examiner combined different embodiments of Olmos (Pet. 120), we agree with Patent Owner that the Examiner's statements were directed to a feature unrelated to the extension. PO Resp. 52; Ex. 1004 (prosecution history), 63–64, 72–73, 132–33, 137–38. On this record, Petitioner fails to adequately explain how the Examiner's unrelated rationales support a reason to combine the Olmos embodiments as Petitioner proposes. Accordingly, we do not rely on this argument offered by Petitioner.

g. Conclusion

In sum, because Petitioner's proposed combination of Olmos's Figure 8 extension with Olmos's Figure 16 embodiment (1) is expressly taught or suggested by Olmos; (2) is no more than the predictable use of prior art elements according to their established functions; and (3) permits use of a shorter screw to reduce the risk of protrusion while strengthening the connection between the wedges, we find that Petitioner has demonstrated by a preponderance of the evidence that a person of ordinary skill in the art would have had a reason to combine Olmos's Figure 8 extension with Olmos's Figure 16 embodiment with a reasonable expectation of success.

3. Whether Olmos Teaches the "complementary with one another" Limitation in Claims 10–14

Below we analyze the parties' arguments regarding whether Olmos teaches or suggests ramped portions of the endplates that are "complementary with one another" as recited in claim limitation 10[e]. *See* Ex. 1001, 22:24–26; *see also* Pet. 132 (limitation 10[e]). We begin by analyzing Petitioner's arguments in the Petition (and Patent Owner's

responses thereto), then turn to Petitioner's arguments in its Reply (and Patent Owner's responses thereto).

a. Arguments in the Petition

Petitioner argues that Olmos teaches the "complementary with one another" limitation because Olmos's intervertebral implant has endplates with ramped portions that "have the same angle, effectively mirroring each other." Pet. 102. This is illustrated in Petitioner's annotated version of Olmos's Figure 18, which we reproduce below:

Olmos, Fig. 18

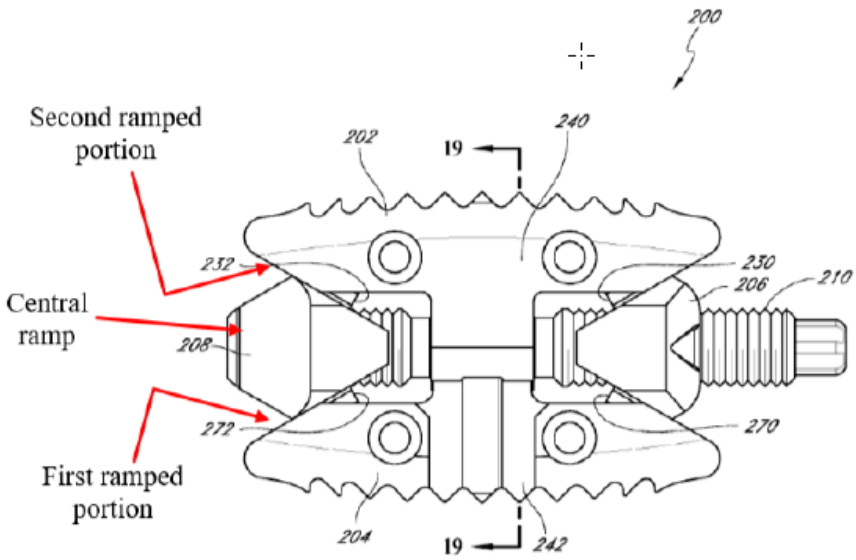

Id. at 103. Petitioner's annotated version of Olmos's Figure 18 shows Olmos's intervertebral implant with red arrows pointing to the central ramp/distal wedge member 208 and first and second endplates having first and second ramped portions. Mr. Drewry opines that Olmos's first and second ramped portions "hav[e] the same angle, effectively mirroring each other, and further engage opposing surfaces of distal wedge member 208 central ramp in a complementary manner, i.e., by engaging the top and

bottom sloped surfaces of the ramp in a generally identical way and causing generally symmetrical expansion of the device." Ex. 1002 (Drewry Decl.) ¶ 380. Mr. Drewry opines that Olmos's ramps thus teach limitation 10[e], "especially when considering the Examiner's statements during the prosecution history of the '731 patent" regarding Olmos's ramped surfaces having mirrored angles. *Id.* ¶ 382 (citing Ex. 1004 (prosecution history), 35–38, 40–43, 55, 57).

Patent Owner responds that mirrored surfaces are the "*opposite* of complementary—because they cannot complete one another or even engage at all." PO Resp. 79. As Mr. Culbert explains, the mirrored surfaces "cannot complete one another absent reorienting them in a manner inconsistent with their orientation in the assembled implant." Ex. 2013 (Culbert Decl.) ¶ 166.

On the full trial record, we find that the surfaces Petitioner relies on in Olmos are not "complementary with one another" as claimed. As discussed above, we construe this claim term to mean "completing one another." *See supra* Section II.D.2. We find that Olmos's first and second ramp portions, which are mirrored by having the same angles across the horizontal plane between them, do not complete one another.

To the extent Petitioner is arguing that, consistent with the Examiner's mapping during prosecution, we should find Olmos's ramps to be complementary because the implant can be disassembled and the ramps reoriented, we disagree. *See* Pet. 69 (citing prosecution history). Instead, we agree with Patent Owner that claim 10 is directed to an assembled, functional intervertebral implant, not a system of unconnected implant components. PO Sur-reply 18. For example, the claim recites that the

components are interconnected, e.g., the "actuation member extend[s] through the opening of the driving ramp," and specifies that "when the actuator member is actuated," the endplates move towards or away from one another. *See id.* Accordingly, we agree with Patent Owner and Mr. Culbert that Petitioner's position is inconsistent with how a person of ordinary skill in the art would interpret claim 10. Ex. 2013 (Culbert Decl.) ¶¶ 176–77; PO Resp. 87.

For the above reasons, we determine that based on the arguments presented in the Petition, Petitioner has not demonstrated by a preponderance of the evidence that Olmos teaches or suggests the "complementary with one another" limitation recited in claim 10, and thus has not shown that Olmos would have rendered claim 10 obvious.

Petitioner's arguments for dependent claims 11–14 do not overcome this deficiency. Accordingly, for at least the same reasons discussed above for claim 10, we determine that, based on the arguments presented in the Petition, Petitioner has not shown by a preponderance of the evidence that Olmos would have rendered claims 11–14 obvious.

b. Arguments in Petitioner's Reply

In its Reply, Petitioner identifies additional disclosures in Olmos that it alleges satisfy limitation 10[e]. *See* Reply 36–42. Patent Owner moved to strike these new arguments, and as we discuss below, we deny that motion. *See infra* Section III. Accordingly, here we address the merits of the parties' arguments as to whether the additional disclosures in Olmos that Petitioner identifies in its Reply teach or suggest claim limitation 10[e].

To provide context, we begin by reiterating the language of claim limitation 10[e]: "the ***first ramped portion*** of the first endplate and the

second ramped portion of the second endplate are ***complementary with one another***." Ex. 1001, 22:24–26. Petitioner asserts that "Olmos' Figs. 16-26 embodiment discloses at least three complementary ramped portion pairs on the endplate sidewalls." Pet. Reply 37.

Petitioner starts with the premise that "the specification notes that ramped surfaces can be curved." Pet. Reply 37 (citing Ex. 1001, 6:34–36, 9:30–32, 13:9–11, 16:59–61); *see also* Pet. Sur-sur-reply 1–2. It then argues that Olmos's Figure 16 embodiment has "three pairs of complementary surfaces meeting this limitation," which it identifies in annotated versions of Olmos's Figures 16B and 16A, reproduced below:

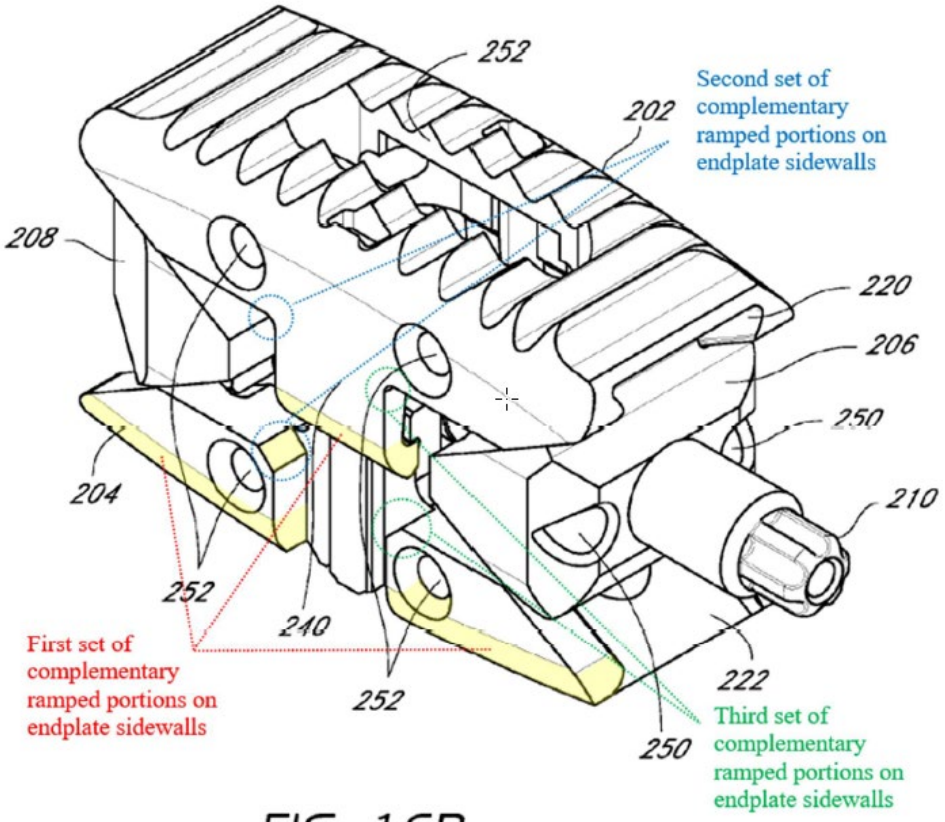

FIG. 16B

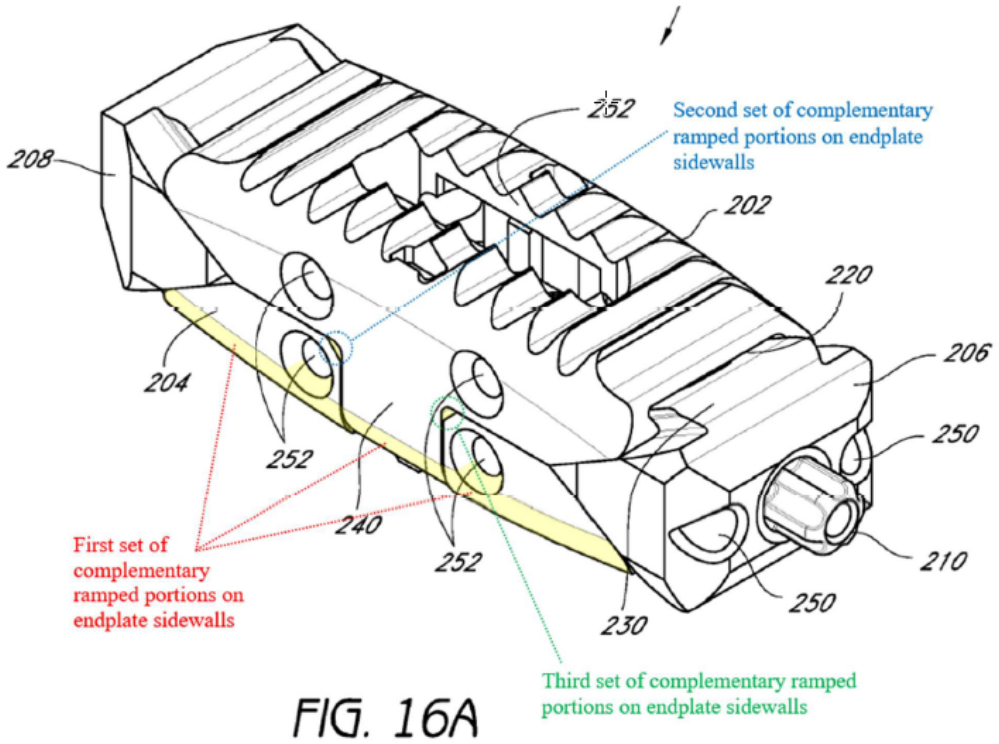

FIG. 16A

Pet. Reply 38–39. Olmos's Figures 16B and 16A respectively show perspective views of an intervertebral implant in an expanded and unexpanded state. *See* Ex. 1006 (Olmos) ¶¶ 51–52. Petitioner annotates the figures with yellow highlighting and colored text to identify three different sets of "ramped portions on endplate sidewalls" that it alleges meet limitation 10[e].[32] Pet. Reply 38–39. Petitioner argues that "[b]ecause the pairs of surfaces identified above (1) are located on the endplate sidewalls, (2) are ramped (e.g., curved), and (3) 'complete each other' when the device is collapsed, they satisfy [Patent Owner's] construction."[33] *Id.* at 40.

---

[32] Petitioner marks the first set of ramped portions using red text, and the second and third sets using blue and green text, respectively.

[33] Petitioner asserts that the surfaces it identifies in Olmos's figures "can also be seen in images of the Opticage® device embodying Olmos' Figures 16-26." Pet. Reply 39–40; *see also* Pet. Sur-sur-reply 1–2, 5 (presenting arguments regarding Opticage). We agree with Patent Owner that the

Patent Owner responds that "Petitioner's new mappings turn on an overly broad construction" of the claim term "ramped portion," i.e., "Petitioner asserts that the Specification teaches that 'ramped surfaces' can be curved so that it can equate the claimed 'ramped portion' with any curved surface."[34] PO Sur-Reply 27–28.

We agree with Patent Owner, and for this reason, find that the additional "three pairs of complementary surfaces" Petitioner identifies in its Reply are not "ramped portions" as recited in claim limitation 10[e]. Petitioner relies on the following statement in the Specification to support equating "ramped portion" with any curved surface:

> It is also contemplated that the upper surface 40 can be generally planar but includes a generally straight ramped surface or **a curved ramped surface**. The ramped surface allows for engagement with the adjacent vertebral body 2 in a lordotic fashion.

---

relevant question is what Olmos, not a commercial product allegedly based on Olmos, teaches or suggests. *See* PO Sur-reply 34. Accordingly, we do not consider Petitioner's arguments based on the Opticage device.

[34] As we discuss below (*infra* Section III), Petitioner asserts that under *Axonics, Inc., v. Medtronic, Inc.*, 75 F.4th 1374, 1384 (Fed. Cir. 2023), it is afforded the opportunity to identify additional disclosures in Olmos (not identified in the Petition) to address a claim construction adopted in the Institution Decision. *See* Opp. 1. The parties do not address whether *Axonics* also permits a petitioner to construe an additional claim term in its reply in order to support its reliance on new disclosures, as Petitioner does here (newly construing "ramped portion"). We do not need to address whether such additional claim construction is proper, because even assuming it is, we nevertheless find Petitioner's obviousness arguments for claims 10–14 unpersuasive for the reasons we discuss in this section.

Ex. 1001, 9:30–32 (emphasis added); *see also id.* at 13:9–11, 16:59–61 (reciting same). We agree with Patent Owner that "nothing here suggests that a ramp is the same as a curve." PO Sur-reply 28. We also agree with Patent Owner and Mr. Culbert that simply because "a ramped surface can be straight or curved does not mean that all curves are ramps." *Id.*; Ex. 2032 (Culbert Sur-reply Decl.) ¶ 4.

Petitioner also relies on the following statement in the Specification: "[t]he first side portion 24 and the second side portion 26 may be curved." Ex. 1001, 6:34–36; Pet. Reply 37. We agree with Patent Owner that this citation is unavailing because it "makes no mention of a 'ramp,'" and thus does not support Petitioner's attempt to expand the term "ramp" to encompass any curved surface. PO Sur-reply 28–29. In short, we agree with and adopt Patent Owner's showing that "[n]othing in the intrinsic record supports Petitioner's broad interpretation of 'ramped portion'" to include the curved surfaces it points to in Olmos's Figures 16A and 16B. *See id.* at 29–31 (reviewing Specification's use of the terms "ramped surface" and "ramped portion").

We also agree with Patent Owner that a person of ordinary skill in the art would not have understood the first set of structures Petitioner points to be "ramped portions," but instead would have understood them to be "'external fillets'—exterior edges that are rounded to eliminate sharp corners." PO Sur-reply 33; Ex. 2032 (Culbert Sur-reply Decl.) ¶ 9; *see also* Tr. 51:22–23 (equating "fillet" with "rounded corner"). As Mr. Culbert establishes, a person of ordinary skill in the art would not consider a fillet to be a ramp. Ex. 2032 (Culbert Sur-reply Decl.) ¶ 11.

We also agree with Patent Owner that the second and third sets of structures Petitioner identifies (using blue and green text) are not "ramped portions," but instead consist of an internal fillet and a chamfer (an intentionally cut-away portion), as depicted in Patent Owner's annotated graphic reproduced below:

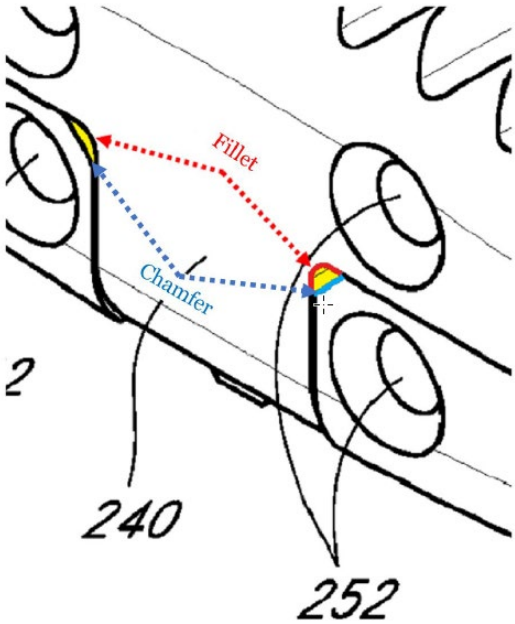

PO Sur-reply 37; Ex. 2032 (Culbert Sur-reply Decl.) ¶ 16. The graphic above is an excerpt of Olmos's Figures 16A, which shows a perspective view of an intervertebral implant in an unexpanded state. Patent Owner highlights the second and third sets of structures Petitioner relies on as meeting the "complementary with one another" claim limitation. We agree with Patent Owner that these structures are chamfer/fillet pairs, as shown by Patent Owner's annotations (i.e., Patent Owner colors the fillet (rounded corner) in red and the chamfer (cut-away portion) in blue).[35]

[35] We also agree with Patent Owner that "even if a chamfer could be considered a 'ramped portion,' the opposing fillet cannot." PO Sur-reply 38.

Petitioner alternatively argues that the second and third sets of structures Petitioner relies on (the chamfer/fillet pairs) are "imperfection[s]" in the implant design, and that a person of ordinary skill in the art would have been motivated to modify them so that their surfaces match or mate, in order to minimize interference with surrounding tissues. *See* Pet. Reply 41.

We are not persuaded. Patent Owner demonstrates that "the notion that the chamfer/fillet is a design 'imperfection' is unsubstantiated speculation by Mr. Drewry." PO Sur-reply 39. Patent Owner shows that "[a] POSITA would have understood chamfers/fillets to be well-known, commonly implemented design features that improve mechanical performance, particularly where two mechanical components would otherwise engage." *Id.*; Ex. 2032 (Culbert Sur-reply Decl.) ¶ 20.

Patent Owner also demonstrates that "neither Petitioner nor Mr. Drewry cite any evidence substantiating the alleged concern with tissue 'catching' on openings in the side of the implant during insertion." PO Sur-reply 40 (quoting Ex. 2032 (Culbert Sur-reply Decl.) ¶ 21). Petitioner's argument is inconsistent with "the fact that there are already multiple, much larger openings (yellow) in the side of the implant," as shown in Patent Owner's annotated version of Olmos's Figure 16A, reproduced below:

As Mr. Culbert establishes, a person of ordinary skill in the art would not consider a fillet to be a ramp. Ex. 2032 (Culbert Sur-reply Decl.) ¶ 11.

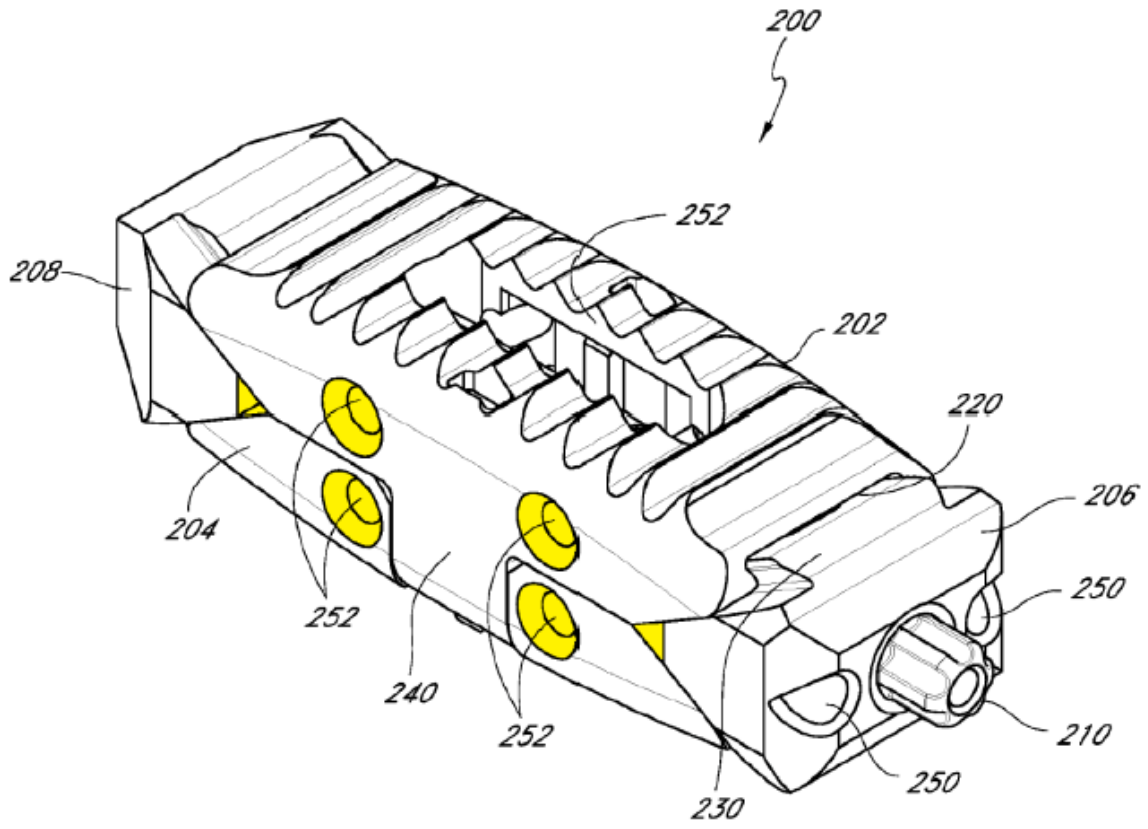

PO Sur-reply 41. Patent Owner's annotated version of Olmos's Figure 16A includes yellow highlighting to show two gaps between the endplates and ramps, and four apertures designed to facilitate osseointegration of the implant within the intervertebral space (*see* Ex. 1006 (Olmos) ¶ 162). We agree with Patent Owner that "[i]f tissue 'catching on' to the side of the implant was of any appreciable concern, Olmos' implant design would not have [these] numerous larger openings in the side." PO Sur-reply 41; Ex. 2032 (Culbert Sur-reply Decl.) ¶ 22.

In sum, Petitioner does not persuade us that any of the additional structures it identifies in Olmos teach or suggest the "complementary with one another" limitation recited in claim 10.

c. Conclusion Regarding Claims 10–14

For the above reasons, we determine that Petitioner has not demonstrated by a preponderance of the evidence that Olmos teaches or suggests the "complementary with one another" limitation recited in claim 10. Petitioner's arguments for dependent claims 11–14 do not overcome this deficiency. Accordingly, we determine that Petitioner has not shown by a preponderance of the evidence that Olmos (or Olmos and Chung, *see supra* 78 n.23) renders claims 11–14 unpatentable as obvious.

4. Conclusion – Obviousness Over Olmos

For the reasons discussed above, we find that Petitioner demonstrates by a preponderance of the evidence that Olmos renders claims 1–9 and 15 unpatentable as obvious, but does not demonstrate by a preponderance of the evidence that Olmos (or Olmos and Chung) renders claims 10–14 unpatentable as obvious.

G. Petitioner's Additional Grounds of Alleged Unpatentability

Petitioner additionally asserts that (1) claims 1–15 are unpatentable as obvious over Chung and Baynham; and (2) claims 2–6 and 10–14 are unpatentable as obvious over Chung and Olmos, or Chung, Olmos, and Baynham. *See* Pet. 3 (Grounds 2, 4), 63–67, 123–125. Patent Owner disputes Petitioner's contentions. *See, e.g.*, PO Resp. 56–66, 89–90.

Because we determine that claims 1–9 and 15 are unpatentable as anticipated by Chung and as obvious over Olmos as discussed above, we need not address these claims under Petitioner's additional grounds of unpatentability. *See SAS Inst. Inc. v. Iancu*, 138 S. Ct. 1348, 1359 (2018) (holding that a petitioner "is entitled to a final written decision addressing all of the claims it has challenged"); *Bos. Sci. Scimed, Inc. v. Cook Grp. Inc.*,

809 F. App'x 984, 990 (Fed. Cir. 2020) (nonprecedential) (agreeing that the Board has "discretion to decline to decide additional instituted grounds once the petitioner has prevailed on all its challenged claims").

As for claims 10–14, Petitioner's arguments in Grounds 2 and 4 do not rectify the deficiencies discussed above with respect to Petitioner's failure to demonstrate, in the context of Grounds 1 and 3, that Chung and Olmos teach or suggest the "complementary with one another" limitation recited in claim 10. *See supra* Sections II.E (analysis of Ground 1), II.F (analysis of Ground 3). This is because in Grounds 2 and 4, Petitioner does not specifically address the "complementary with one another" limitation, but instead appears to rely on the same arguments it made in Grounds 1 and 3. *See* Pet. 63–67, 123–25.

Accordingly, Petitioner has not demonstrated by a preponderance of the evidence that claims 10–14 are unpatentable as obvious over (1) Chung and Baynham; or (2) Chung and Olmos, or Chung, Olmos, and Baynham.

III. PATENT OWNER'S MOTION TO STRIKE

Patent Owner filed a Motion to Strike the "new obviousness theories offered by Petitioner in its Reply (Paper 23 at 36–42), as well as the portions of Mr. Drewry's Reply Declaration (Ex. 1036 ¶¶ 16–26) supporting those theories." Mot. 1. Petitioner opposes. *See generally* Opp. As the moving party, Patent Owner bears the burden of establishing that it is entitled to the requested relief. 37 C.F.R. § 42.20(c).

To provide context for the parties' dispute, we provide an overview of the relevant events. In the Petition, Petitioner argued that the claim term "complementary with one another" encompasses endplates having first and second ramped portions that have "angles that mirror each other," and relied

on Olmos's ramped surfaces having mirrored angles as allegedly teaching or suggesting this claim limitation. Pet. 45, 102–03.

In its Preliminary Response, Patent Owner argued that "complementary with one another" means "mat[ing] with one another in a beneficial way." Prelim. Resp. 90. Patent Owner also argued that mirrored surfaces are the "opposite of complementary," because "they cannot engage in a way that enhances their engagement." *Id.* at 86.

In our Institution Decision, we preliminarily construed the term "complementary with one another" to mean "completing one another." Inst. Dec. 20. We also preliminarily agreed with Patent Owner that the mirrored ramps Petitioner relies on in Olmos are not "complementary with one another" as claimed because they do not complete each other. *Id.* at 54–55.

Following institution, in its Patent Owner Response, Patent Owner accepted our preliminary construction of "complementary with one another," and again argued that Olmos's mirrored surfaces are the "*opposite* of complementary—because they cannot complete one another or even engage at all." PO Resp. 78–79.

In its Reply, Petitioner identified three new sets of structures in Olmos's Figure 16 embodiment (not identified in the Petition) that it argues meets the "complementary with one another" limitation as we preliminarily construed it. Pet. Reply 37–39. Petitioner argued that in accepting the Board's preliminary construction of "complementary with one another," Patent Owner deviated from its prior arguments (made in its Preliminary Response), thereby justifying Petitioner's reliance on new structures in Olmos. *Id.* at 36. According to Petitioner, "when a Patent Owner Response

advances new claim construction positions, Petitioner is afforded the opportunity to identify other embodiments/disclosures in at least the Petition-cited prior art to address those new positions." *Id.* (citing *Axonics, Inc., v. Medtronic, Inc.*, 75 F.4th 1374, 1384 (Fed. Cir. 2023)).

Patent Owner sought authorization to file a motion to strike Petitioner's new obviousness theories. *See* Paper 31, 1 (Board's Order dated Oct. 12, 2023, "Order"). Patent Owner also sought authorization to submit an expert declaration with its Sur-reply ("sur-reply expert declaration") to respond to the new theories. *See id.* at 1–2. We authorized both the motion to strike and the requested sur-reply expert declaration. *See id.* at 4. We also authorized Petitioner's unopposed request to cross-examine the sur-reply expert declarant and to file a related Sur-sur-reply. *Id.*

With that background, we turn back to Patent Owner's arguments in its Motion to Strike. Patent Owner argues that the Petition is supposed to guide the life of this IPR, and "Petitioner here seeks to improperly deviate from its contentions in the Petition based on a misapplication of *Axonics*." Mot. 3. Patent Owner suggests that Petitioner should have anticipated the proposed construction Patent Owner offered in its Preliminary Response and addressed it in the Petition. *See id.* at 1, 7. Patent Owner also argues that *Axonics's* holding does not broadly apply to all situations where "a construction not advanced in the petition was adopted by the Board (in a DI [institution decision] or FWD [final written decision])," but is instead limited to situations where a patent owner does not propose a claim construction prior to institution, first proposes one in a patent owner response, and the Board adopts that construction after institution. *Id.* at 4–5.

Petitioner responds that under Federal Circuit precedent, a "petitioner must be given the opportunity to present arguments responding to and applying the construction advanced by the Patent Owner and/or adopted by the Board—regardless of when that construction was raised or whether it was first raised by the Board or by the Patent Owner." Opp. 2; *see also id.* at 1–2 (citing *Axonics, Inc.*, 75 F.4th at 1383; *Ericsson Inc. v. Intellectual Ventures I LLC*, 901 F.3d 1374, 1380 (Fed. Cir. 2018); *Qualcomm Inc. v. Intel Corp.*, 6 F.4th 1256, 1263 (Fed. Cir. 2021); *Hamilton Beach Brands, Inc. v. f'real Foods, LLC*, 908 F.3d 1328, 1338–39 (Fed. Cir. 2018)).

Considering all of the arguments and evidence of record, under the facts of this case, we deny Patent Owner's motion to strike. As an initial matter, we do not agree with Patent Owner's suggestion that the construction Patent Owner proposed in its Preliminary Response was foreseeable to Petitioner "both from the prosecution history and the infringement contentions," such that Petitioner should have addressed it in its Petition. Mot. 7. In particular, we see no indication that when the Petition was filed, Patent Owner had articulated a construction of the term "complementary with one another," beyond stating that it has a "plain and ordinary meaning." *See* Ex. 1023, 1 (Patent Owner's proposed claim construction in parallel litigation stating that the term "complementary with one another" has a "plain and ordinary meaning," without specifying that meaning). On this record, we reject Patent Owner's argument that Petitioner should have ferreted out the Patent Owner's proposal—or our preliminary construction, which no party had proposed—and addressed it in the Petition. *See also Axonics*, 75 F.4th at 1383 n.10 ("[T[he regulation that governs the content of

a petition . . . does not direct a petitioner to raise, address, and apply alternative possible constructions . . . .").

Turning to the propriety of Petitioner's new arguments on Reply, we acknowledge that "the petitioner's petition . . . is supposed to guide the life" of an *inter partes* review. *SAS Inst., Inc.*, 138 S. Ct. at 1356. Our rules require that a "[p]etitioner may not submit new evidence or argument in reply that it could have presented earlier, e.g. to make out a prima facie case of unpatentability." Consolidated Trial Practice Guide 73; 37 C.F.R. § 42.23(b). Nevertheless, there are circumstances under which petitioners are permitted to submit new arguments and evidence in reply, such as "where a patent owner offers a new claim construction for the first time in its response after the institution decision." *Axonics, Inc.*, 75 F.4th at 1380; *see also id.* at 1383 (holding that "when the Board adopts a new claim construction following institution, . . . the petitioner must be afforded a reasonable opportunity in reply to present argument and evidence under that new construction").

Patent Owner is correct that the facts of *Axonics* differ from those here. Mot. 6. In *Axonics*, the patent owner "first proposed a construction after institution," whereas here, Patent Owner first proposed a construction for the "complementary with one another" limitation in its Preliminary Response. *Id.* It is also true that in Petitioner's other cited cases, the Board adopted a new claim construction "***following institution***," whereas here, we adopted a preliminary claim construction ***at institution***. Mot. 5; *see Ericsson*, 901 F.3d at 1380 (Board changed claim construction after institution); *Qualcomm*, 6 F.4th at 1262 (Board adopted own construction in final written decision); *Hamilton Beach Brands*, 908 F.3d at 1335 (adopting

construction in final written decision). The parties have not called our attention to a case with facts that precisely match those here.

That said, under the facts of this case, we find it was reasonable to provide Petitioner an opportunity to respond under the new construction, and decline to strike Petitioner's relevant argument and evidence. *Cf. Axonics*, 75 F.4th at 1383 ("[W]hen the Board adopts a new claim construction following institution, an IPR petitioner must have adequate notice and an opportunity to respond under the new construction."). Like in *Axonics*, in its new arguments on Reply, Petitioner here relies on the same embodiment from the same prior art reference that it relies on in the Petition to support the same legal argument, i.e., that Olmos's Figure 16 embodiment discloses the "complementary with one another" limitation of challenged claims 10–14. *See Axonics*, 75 F.4th at 1384; *see also Apple Inc. v. Andrea Elecs. Corp.*, 949 F.3d 697, 706 (Fed. Cir. 2020) (permitting petitioner to elaborate in reply on an unpatentability theory presented in the petition). Moreover, we permitted Patent Owner to file (and it indeed did file) a sur-reply brief and expert declaration that addressed Petitioner's new obviousness theories. Accordingly, both parties had adequate notice of our preliminary construction and an opportunity to respond under that new construction.

For these reasons, we deny Patent Owner's motion to strike.

IV. CONCLUSION[36]

Based on the information presented, we conclude that Petitioner has demonstrated by a preponderance of the evidence that claims 1–9

[36] Should Patent Owner wish to pursue amendment of the challenged claims in a reissue or reexamination proceeding subsequent to the issuance of this Decision, we draw Patent Owner's attention to the April 2019 *Notice*

and 15 are unpatentable, but has not demonstrated the same for claims 10–14.

In summary:

Claims	35 U.S.C. §	Reference(s) /Basis	Claims Shown Unpatentable	Claims Not shown Unpatentable
1–15	102(b)	Chung	1–9, 15	10–14
1–15	103(a)	Chung, Baynham[37]		10–14
1–15	103(a)	Olmos, Chung	1–9, 15	10–14
2–6, 10–14	103(a)	Chung, Olmos, Baynham[38]		10–14
Overall Outcome			1–9, 15	10–14

V. ORDER

In consideration of the foregoing, it is hereby:

ORDERED that Petitioner has demonstrated by a preponderance of the evidence that claims 1–9 and 15 of U.S. Patent 8,845,731 B2 are unpatentable, but has not demonstrated the same for claims 10–14;

Regarding Options for Amendments by Patent Owner Through Reissue or Reexamination During a Pending AIA Trial Proceeding. *See* 84 Fed. Reg. 16,654 (Apr. 22, 2019). If Patent Owner chooses to file a reissue application or a request for reexamination of the challenged patent, we remind Patent Owner of its continuing obligation to notify the Board of any such related matters in updated mandatory notices. *See* 37 C.F.R. § 42.8(a)(3), (b)(2).

[37] As explained above (*see supra* Section II.G), we address only claims 10–14 under this ground.

[38] As explained above (*see supra* Section II.G), we address only claims 10–14 under this ground.

FURTHER ORDERED that Patent Owner's Motion to Strike is *denied*; and

FURTHER ORDERED that, because this is a Final Written Decision, parties to this proceeding seeking judicial review of this Decision must comply with the notice and service requirements of 37 C.F.R. § 90.2.

FOR PETITIONER:

Michael Houston
Scott Anderson
Jeffrey Costakos
FOLEY & LARDNER LLP
mhouston@foley.com
sanderson@foley.com
jcostakos@foley.com

FOR PATENT OWNER:

Stephen Zinda
James Hall
J. Cabello
CABELLO HALL ZINDA, PLLC
stephen@chzfirm.com
james@chzfirm.com
david@chzfirm.com