Trials@uspto.gov
571-272-7822

Paper 21
Date: April 24, 2023

UNITED STATES PATENT AND TRADEMARK OFFICE

BEFORE THE PATENT TRIAL AND APPEAL BOARD

SAMSUNG ELECTRONICS CO., LTD.,
Petitioner,

v.

MYPORT, INC.,
Patent Owner.

IPR2023-00024
Patent 10,237,067 B2

Before JEAN R. HOMERE, TERRENCE W. McMILLIN, and SEAN P. O'HANLON, *Administrative Patent Judges*.

O'HANLON, *Administrative Patent Judge*.

DECISION
Granting Institution of *Inter Partes* Review
35 U.S.C. § 314

I. INTRODUCTION

A. Background

Samsung Electronics Co., Ltd. ("Petitioner") filed a Petition for *inter partes* review of claims 1–17 of U.S. Patent No. 10,237,067 B2 (Ex. 1001, "the '067 patent"). Paper 1 ("Pet."), 1. MyPort, Inc. ("Patent Owner") filed a Preliminary Response. Paper 12 ("Prelim. Resp."). With our authorization (*see* Ex. 3002), Petitioner filed a Preliminary Reply (Paper 18, "Prelim. Reply") and Patent Owner filed a Preliminary Sur-reply (Paper 19, "Prelim. Sur-reply").

Institution of an *inter partes* review is authorized by statute only when "the information presented in the petition . . . and any response . . . shows that there is a reasonable likelihood that the petitioner would prevail with respect to at least 1 of the claims challenged in the petition." 35 U.S.C. § 314(a) (2018). We have authority, acting on the designation of the Director, to determine whether to institute an *inter partes* review under 35 U.S.C. § 314 and 37 C.F.R. § 42.4(a). For the reasons set forth below, upon considering the parties' briefs and evidence of record, we conclude that the information presented shows that there is a reasonable likelihood that Petitioner would prevail in establishing the unpatentability of at least one of the challenged claims. Thus, we institute *inter partes* review.

B. Real Parties in Interest

Petitioner identifies itself and Samsung Electronics America, Inc. as real parties in interest. Pet. 66.

Patent Owner identifies itself as the sole real party in interest. Paper 4, 2.

C. Related Matters

The parties indicate that the ’067 patent is the subject of the following district court proceeding:

> *MyPort, Inc. v. Samsung Electronics Co., Ltd.*, Case No. 2:22-cv-114 (E.D. Tex. filed April 15, 2022) (“the Texas litigation”).

Pet. 66; Paper 4, 2. The parties note other petitions for *inter partes* review filed by Petitioner and challenging patents owned by Patent Owner. Pet. 66; Paper 4, 2. More particularly, Petitioner filed a petition for *inter partes* review (IPR2023-00023) of claims 1–17 of U.S. Patent No. 9,832,017 and a petition for *inter partes* review (IPR2023-00025) of claims 1–17 of U.S. Patent No. 10,721,066. Pet. 66; Paper 4, 2.

D. The Challenged Patent

The ’067 patent relates to the storage and retrieval of digital media files. Ex. 1001, 2:24–27. Digital media devices, such as mobile phones with audio and video recording capability, have greatly reduced the cost of creating new image, movie, and audio recordings, making the number of these recordings available in any given individual’s library skyrocket. *Id.* at 2:31–40. This ability to store virtually unlimited numbers of media files, however, has created new problems. *Id.* at 2:41–42. For example, having a large number of media files increases the difficulty of manually describing and indexing the files. *Id.* at 2:42–44. Thus, “for many, photographs, movies and audio recordings are kept in poorly organized computer files and finding any particular picture, movie or recording is a difficult and time-consuming process.” *Id.* at 2:44–48.

The ’067 patent purports to provide an improved system having a capture device that includes a data converter for capturing various types of information, such as “[s]till pictures, moving pictures, audio, [and] telemetry,” and organizing the information into a data element. Ex. 1001. 3:62–4:2. The data converter can be a digital camera, digital video recorder, or “any type of device that will capture the information and place it in some type of digitized format.” *Id.* at 4:3–8. Metadata, such as time and date, location, operator identification, or other information relevant to establish the context of the data element, is created at the same time as the data element. *Id.* at 4:14–19. The capture device may also include a secondary data converter for gathering additional information that relates to defining the context of the data element. *Id.* at 4:35–38. “For example, after a camera/video recorder takes a picture/video, a microphone (the secondary data converter) might capture the audio describing the image or the audio from the video just captured.” *Id.* at 4:38–42. This additional information is stored as a “context description element” with the data element and metadata. *Id.* at 4:42–43.

The capture device may send this stored data to a storage facility that may add “context tags,” which are searchable elements derived from the different types of data. Ex. 1001, 5:10–14, 5:47–52. As an example, for a data element that “is a still photograph or video, the storage facility may create context tags that describe elements of the scene or image(s), such as ‘animal,’ or ‘dog,’ or ‘Spot,’ depending on the mechanism that converts the information in the data element or the context description element into a tag.” *Id.* at 5:52–57. Context tags may be created using “a speech-to-text algorithm” for audio files or “image recognition and identification” for still

or moving images. *Id.* at 5:58–62. The result is a set of data for storage that "now includes a set of searchable tags specific to that image, video, audio or other media." *Id.* at 5:62–66.

Figure 2 illustrates "a diagrammatic view of the overall operation of the system," and is reproduced below. Ex. 1001, 6:43–44.

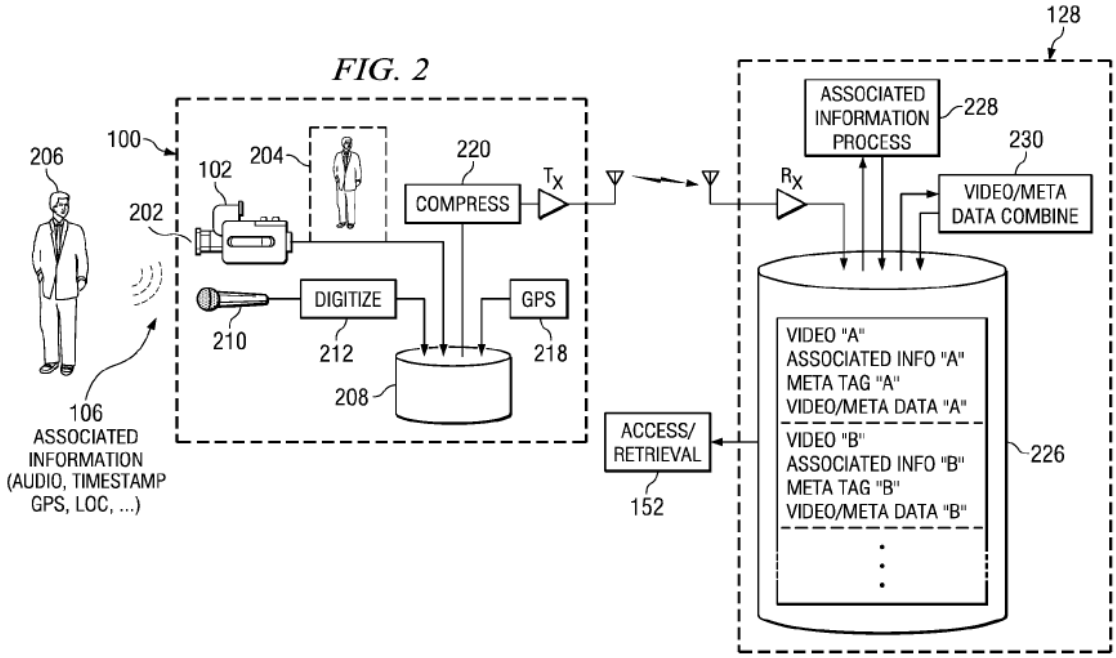

Figure 2 shows capture device system 100 including capture device 102, illustrated as a digital camera, and microphone 210. *Id.* at 6:43–59. All the information collected via the capture device and microphone is stored in database 208 within the capture device, from which location the information may be compressed and then sent to storage facility 128 for storage in database 226. *Id.* at 7:1–35. "At this time there will be, for example, a video clip or a video image (such as a still image) stored in association with the various information that is associated therewith." *Id.* at 7:37–40. Access and retrieval block 152 "can allow one to access the particular modified or 'tagged' image via a search," so that "[a]ny information that can be provided

over and above the video information that was provided in all of the associated information at the camera can then be searched." *Id.* at 7:62–8:4. In an alternative embodiment, illustrated in Figure 3, databases 208 and 226 are combined into a single database within the capture device, and the capture device creates and adds context tags to the image or video. *Id.* at 8:5–28; Fig. 3.

E. Disclaimer of Claims 1–5

A "patent owner may file a statutory disclaimer under 35 U.S.C. [§] 253(a) in compliance with § 1.321(a) of this chapter, disclaiming one or more claims in the patent. No *inter partes* review will be instituted based on disclaimed claims." 37 C.F.R. § 42.107(e). A disclaimer under 35 U.S.C. § 253(a) is "considered as part of the original patent" as of the date on which it is "recorded" in the U.S. Patent and Trademark Office ("Office"). 35 U.S.C. § 253(a). For a disclaimer to be "recorded" in the Office, the document filed by the patent owner must:

> (1) Be signed by the patentee, or an attorney or agent of record;
> (2) Identify the patent and complete claim or claims, or term being disclaimed. A disclaimer which is not a disclaimer of a complete claim or claims, or term will be refused recordation;
> (3) State the present extent of patentee's ownership interest in the patent; and
> (4) Be accompanied by the fee set forth in [37 C.F.R.] § 1.20(d).

37 C.F.R. § 1.321(a); *see also Vectra Fitness, Inc. v. TNWK Corp.*, 162 F.3d 1379, 1382 (Fed. Cir. 1998) (holding that a § 253 disclaimer is "recorded" on the date that the Office receives a disclaimer meeting the requirements of

37 C.F.R. § 1.321(a), and that no further action is required in the Office for a disclaimer to be "recorded").

Here, Patent Owner filed a statutory disclaimer of claims 1–5 of the '067 patent. Prelim. Resp. 8–9; Ex. 2002. Based on our review of Exhibit 2002, we determine that a disclaimer of claims 1–5 of the '067 patent under 35 U.S.C. § 253(a) has been filed with the Office as of January 24, 2023. Based on the information in the public record, we find that the disclaimer complies with the above-listed requirements of 37 C.F.R. § 1.321(a).

Because claims 1–5 have been disclaimed under 35 U.S.C. § 253(a), in compliance with 37 C.F.R. § 1.321(a), we do not reach challenges to claims 1–5. As a result, the remaining challenged claims are claims 6–17 ("the challenged claims").

F. The Challenged Claims

Petitioner challenges claims 6–17 of the '067 patent. Pet. 1. Claims 6 and 13 are independent. Claim 6 is illustrative of the challenged claims and is reproduced below.

> 6. A system for capturing image and audio information for storage, comprising:
>
> a capture device having:
>
> internal storage;
>
> a microphone interfaceable with [an] external audio information source that generates external audio information and a first data converter for capturing the first external audio information from the microphone,
>
> a camera interfacing with [an] external image source to capture an image therefrom;

the first data converter processing the captured external audio information and storing it in a first digital audio format as stored digital audio in internal storage within the capture device, the camera for processing the captured image and storing it as a stored digital image in internal storage;

a data capture device for capturing, as captured data, location information, and time information associated with at least the capture of the image and storing the captured data as stored captured data;

a media data converter for converting the the received digital audio to a text based searchable file as a text context tag and creating an image recognition searchable context tag with image recognition of at least a portion of the digital image and associating the text and image recognition context tags with the digital image and the captured data, and

the internal storage storing the digital image in association with the text and image recognition context tags in addition to the stored captured data.

Ex. 1001, 11:37–67.

G. Asserted Grounds of Unpatentability

The Petition relies on the following prior art references:

Name	Reference	Exhibit
Fuller	US 6,833,865 B1, issued December 21, 2004	1003
Rothschild	US 2006/0114338 A1, published June 1, 2006	1007
Anderson	US 6,499,016 B1, issued December 24, 2002	1008
Camahan	US 2005/0267894 A1, published December 1, 2005	1010
Davis	US 2002/0001395 A1, published January 3, 2002	1013

Petitioner asserts the following grounds of unpatentability:[1]

Claim(s) Challenged	35 U.S.C. §	Reference(s)
6–17	103(a)[2]	Rothschild, Anderson
6–9, 13–17	102(b)	Fuller
6–9, 13–17	103(a)	Fuller, Camahan
10–12	103(a)	Fuller, Davis
10–12	103(a)	Fuller, Camahan, Davis

Pet. 1. Petitioner submits a declaration of Benjamin B. Bederson, Ph.D. (Ex. 1002, "Bederson Declaration") in support of its contentions.

II. DISCRETIONARY DENIAL OF INSTITUTION

Under 35 U.S.C. § 314(a), the Director has discretion to deny institution. In determining whether to exercise that discretion on behalf of the Director, we are guided by the Board's precedential decision in *NHK Spring Co., Ltd. v. Intri-Plex Technologies, Inc.*, IPR2018-00752, Paper 8 (PTAB Sept. 12, 2018) (designated precedential).

In *NHK*, the Board found that the "advanced state of the district court proceeding" was a "factor that weighs in favor of denying" the petition under § 314(a). *NHK*, Paper 8 at 20. The Board determined that "[i]nstitution of an *inter partes* review under these circumstances would not be consistent with 'an objective of the AIA . . . to provide an effective and efficient alternative to district court litigation.'" *Id.* (citing *Gen. Plastic*

[1] A challenge to claims that Patent Owner has disclaimed (claims 1–5) is not listed here.

[2] The application resulting in the '067 patent claims priority to a date prior to the date when the Leahy-Smith America Invents Act ("AIA"), Pub. L. No. 112–29, 125 Stat. 284 (2011), took effect. Thus, we refer to the pre-AIA version of sections 102 and 103.

Indus. Co., Ltd. v. Canon Kabushiki Kaisha, IPR2016-01357, Paper 19 at 16–17 (designated precedential in relevant part)).

"[T]he Board's cases addressing earlier trial dates as a basis for denial under *NHK* have sought to balance considerations such as system efficiency, fairness, and patent quality." *Apple Inc. v. Fintiv Inc.*, IPR2020-00019, Paper 11 at 5 (PTAB Mar. 20, 2020) (designated precedential). *Fintiv* sets forth six non-exclusive factors for determining "whether efficiency, fairness, and the merits support the exercise of authority to deny institution in view of an earlier trial date in the parallel proceeding." *Id.* at 6. These factors are reproduced below:

> 1. whether the court granted a stay or evidence exists that one may be granted if a proceeding is instituted;
>
> 2. proximity of the court's trial date to the Board's projected statutory deadline for a final written decision;
>
> 3. investment in the parallel proceeding by the court and the parties;
>
> 4. overlap between issues raised in the petition and in the parallel proceeding;
>
> 5. whether the petitioner and the defendant in the parallel proceeding are the same party; and
>
> 6. other circumstances that impact the Board's exercise of discretion, including the merits.

We discuss the parties' arguments in the context of considering the above factors. In evaluating the factors, we take a holistic view of whether efficiency and integrity of the system are best served by denying or instituting review. *Fintiv*, Paper 11 at 6. We are also guided by the Director's Memorandum, *Interim Procedure for Discretionary Denials in AIA Post-Grant Proceedings with Parallel District Court Litigation*, issued

June 21, 2022 ("Guidance Memo"),[3] which provides several clarifications concerning the application of the *Fintiv* factors.

A. Whether the Court Granted a Stay or Evidence Exists that One May Be Granted if a Proceeding Is Instituted

The existence of a district court stay pending Board resolution of an *inter partes* review has weighed strongly against discretionary denial, while a denial of such a stay request sometimes weighs in favor of discretionary denial. *Fintiv*, Paper 11 at 6–8.

Patent Owner argues that this factor favors denial of institution because Petitioner has presented no evidence regarding a stay. Prelim. Resp. 52. According to Patent Owner, "a stay in [the Texas litigation] is extremely unlikely, as the [P]etitioner tacitly acknowledged when it chose not to file a reply brief in support of its stay motion." *Id.*

Petitioner replies that its "motion to stay remains pending." Prelim. Reply 4.

Patent Owner replies that Petitioner has failed to produce evidence that its motion to stay the Texas litigation will be granted if we institute review in this proceeding. Prelim. Sur-reply 1.

The record indicates that Petitioner has filed a motion to stay the Texas litigation (*see* Ex. 2011) and Patent Owner has filed an opposition to Petitioner's motion (*see* Ex. 2012). The likelihood of the district court

[3] *Available at* https://www.uspto.gov/sites/default/files/documents/interim_proc_discretionary_denials_aia_parallel_district_court_litigation_memo_20220621_.pdf.

granting Petitioner's motion is speculative. Accordingly, the facts underlying this factor are neutral.

B. Proximity of the Court's Trial Date to the Board's Projected Statutory Deadline for a Final Written Decision

When a district court's trial date will occur before the projected statutory deadline for the final written decision, the Board generally weighs this factor in favor of exercising discretion to deny institution. *Fintiv*, Paper 11 at 9. "If the court's trial date is at or around the same time as the projected statutory deadline or even significantly after the projected statutory deadline, the decision whether to institute will likely implicate other factors discussed herein, such as the resources that have been invested in the parallel proceeding." *Id.* When considering the facts underlying this factor, we "will consider the median time from filing to disposition of the civil trial for the district in which the parallel litigation resides." Guidance Memo 3. "[W]hen other relevant factors weigh against exercising discretion to deny institution or are neutral, the proximity to trial should not alone outweigh all of those other factors." *Id.* at 8. "Parties may present evidence regarding the most recent statistics on median time-to-trial for civil actions in the district court in which the parallel litigation resides for [our] consideration." *Id.* at 8–9 (footnote omitted).

Petitioner acknowledges that "trial [in the Texas litigation] is . . . about six weeks before an anticipated final written decision," but argues that "trial dates are unpredictable, and the median time to trial in the Eastern District of Texas is 24.5 months, placing trial more than a month after a [final written decision], thus favoring institution." Pet. 65 (citing Ex. 1023; Guidance Memo 3, 8–9).

Patent Owner argues that this factor favors denial because "the [Texas litigation] is scheduled to begin two months and three weeks *before* the final written decision would be due in this case." Prelim. Resp. 52 (citing *id.* at 11; Ex. 2013, 1). Patent Owner argues that Petitioner's calculation of the projected trial date is incorrect and asserts that the median time of 24.5 months puts the trial date "just two business days after the [final written decision] deadline." *Id.* at 53. Continuing, Patent Owner argues that "the median time to trial has been skewed recently because of the coronavirus pandemic," and that, prior to the pandemic, "the median time to trial in the U.S. District Court for the Eastern District of Texas was only 17.5 months." *Id.* (citing Ex. 1023, 35).

Petitioner replies that "the Director's [Guidance] Memo accounted for [delays due to the coronavirus pandemic] when stating that the Office would rely on median times to trial." Prelim. Reply 5.

Patent Owner replies that "nothing in the [Guidance] Memo condones reliance on skewed statistics." Prelim. Sur-reply 1.

The latest statutory due date for a final written decision in this proceeding is April 26, 2024. The Texas litigation is scheduled to begin on February 5, 2024. Ex. 2013, 1. However, Petitioner presents evidence that, as of June 30, 2022, the median time-to-trial for civil actions in the Eastern District of Texas is 24.5 months (Ex. 1023, 35), which, as Patent Owner concedes, would place the trial date two days after the latest statutory due date for a final written decision in this proceeding (Prelim. Resp. 53). The most recent statistics show that, as of December 31, 2022, the median time-to-trial date for civil actions in the Eastern District of Texas is 19.0 months

(Ex. 3003, 35), which would place the trial date prior to the February 5, 2024, scheduled date.

Accordingly, the facts underlying this factor weigh in favor of exercising our discretion to deny institution. However, the Guidance Memo instructs us that, "when analyzing the proximity of the court's trial date under factor two of *Fintiv*, when other relevant factors weigh against exercising discretion to deny institution or are neutral, the proximity to trial should not alone outweigh all of those other factors." Guidance Memo 8.

C. Investment in the Parallel Proceeding by the Court and the Parties

If, at the time of the institution decision, the district court has issued substantive orders related to the challenged patent, such as a claim construction order, this fact weighs in favor of denial. *See Fintiv*, Paper 11 at 9–10. On the other hand, if the district court has not issued such orders, this fact weighs against discretionary denial. *Id.* at 10. Additionally, we also consider Petitioner's diligence in filing the Petition in weighing this factor. *Fintiv*, Paper 11 at 11 ("If the evidence shows that the petitioner filed the petition expeditiously, such as promptly after becoming aware of the claims being asserted, this fact has weighed against exercising the authority to deny institution under *NHK*.").

Petitioner argues that "the parties and court have not significantly invested in the case because fact discovery is, at best, in its infancy, invalidity contentions are not due for a month, and this Petition is being filed within a month of receiving infringement contentions, thus favoring institution." Pet. 65–66.

Patent Owner argues that, "[b]y the time the decision on institution is due in this case, the parties and the court will have invested significant time and energy in the case including, for example, exchange of infringement and invalidity contentions, engaging in fact discovery, and beginning the claim construction process." Prelim. Resp. 53.

Petitioner replies that Patent Owner "has not identified any efforts it has made to litigate the validity issue, which is the relevant question under *Fintiv* factor 3." Prelim. Reply 5 (citing *Sand Revolution II, LLC v. Cont'l Intermodal Grp.–Trucking LLC*, IPR2019-01393, Paper 24 at 11–12 (PTAB June 16, 2020) (designated informative)).

Patent Owner replies that, "[b]y the time the decision on institution is made, the parties will have served invalidity contentions; engaged in fact discovery regarding, *inter alia*, validity; and begun the claim construction process, which affects validity and overlaps with the IPR." Prelim. Sur-reply 1.

In the Texas litigation, the parties have exchanged infringement and invalidity contentions. Ex. 2013, 4; Ex. 2004. Claim construction does not appear to be an issue, as the parties have not sought construction of any term in this proceeding. *See generally* Prelim. Resp.; Pet. 2. Fact and expert discovery, expert reports, dispositive motions, and, if applicable, claim construction briefing will continue well after the Institution Decision deadline. Ex. 2013, 2–5. Thus, the parties have engaged in some work in the Texas litigation, but significant work still remains to be done.

Patent Owner filed its complaint in the Texas litigation on April 15, 2022. Ex. 1015, 35. Petitioner diligently filed its Petition on October 11, 2022 (Paper 3, 1), approximately one month after Patent Owner filed its

infringement contentions (*see* Ex. 2013, 4) and six months prior to the statutory deadline for filing the Petition (*see* 35 U.S.C. § 315(b)).

Accordingly, the facts underlying this factor weigh against exercising our discretion to deny institution.

D. Overlap Between Issues Raised in the Petition and in the Parallel Proceeding

"[I]f the petition includes the same or substantially the same claims, grounds, arguments, and evidence as presented in the parallel proceeding, this fact has favored denial." *Fintiv*, Paper 11 at 12. "Conversely, if the petition includes materially different grounds, arguments, and/or evidence than those presented in the district court, this fact has tended to weigh against exercising discretion to deny institution under *NHK*." *Id.* at 12–13.

Concerns about the degree of overlap may be mitigated where a petitioner agrees not to pursue in the parallel district court litigation the grounds advanced in the petition. *Sand Revolution*, IPR2019-01393, Paper 24 at 11–12. The Board suggested that a broader stipulation such as one stipulating that the petitioner "would not pursue any ground raised or that could have been reasonably raised in an IPR, i.e., any ground that could be raised under §§ 102 or 103 on the basis of prior art patents or printed publications" would better address concerns relating to overlapping issues. *Id.* at 12 n.5; *see also* Guidance Memo 7 (explaining that such a broad stipulation obviates a full analysis of the *Fintiv* factors).

Petitioner concedes that the Petition includes the same or substantially the same claims, grounds, arguments, and evidence as it presents in the Texas litigation. Prelim. Reply 5 (asserting that Petitioner "will withdraw its contentions *based on the grounds it has presented in the Petition* in the

[Texas] litigation" (emphasis added)). However, Petitioner's stipulation reduces the overlap relating to the challenges presented in the Petition and mitigates "to some degree the concerns of duplicative efforts between the district court and the Board, as well as concerns of potentially conflicting decisions." *See Sand Revolution*, IPR2019-01393, Paper 24 at 12.

Accordingly, the facts underlying this factor weigh marginally against exercising our discretion to deny institution.

E. Whether the Petitioner and the Defendant in the Parallel Proceeding Are the Same Party

"If a petitioner is unrelated to a defendant in an earlier court proceeding," this fact has weighed against exercising discretion to deny institution. *Fintiv*, Paper 11 at 13–14.

There is no dispute that the parties in this proceeding are identical to the parties in the Texas litigation. *See* Prelim. Resp. 58; Pet. 66. Thus, the facts underlying this factor are neutral.

F. Merits and Other Circumstances that Impact the Board's Exercise of Discretion

Petitioner argues that this factor favors institution because its "Petition presents a strong case of unpatentability." Pet. 66.

Patent Owner argues that "this factor definitely points toward denial" because "of the substantial flaws in the [P]etition's challenges." Prelim. Resp. 58. Patent Owner argues that "the relative size and stature of the parties also weighs in favor of denial," asserting that "[P]etitioner has nearly one-quarter of a million employees worldwide and annual revenue over $225 billion, whereas [Patent Owner] is a single-employee company." *Id.*

Patent Owner asserts that Petitioner has a "strategy of filing multiple IPR petitions timed such that major deadlines in the IPRs would coincide or interfere with major deadlines in the [Texas] litigation." *Id.* Finally, Patent Owner argues that "there is limited public interest in the validity of the '067 Patent." *Id.* at 59.

Petitioner replies that Patent Owner's description of its challenge to claims 6–17 based on the combination of Rothschild and Anderson ("Challenge 2") as being flawed is incorrect, making several assertions as to why Patent Owner's arguments regarding the merits of Challenge 2 are unpersuasive. Prelim. Reply 1–2. Petitioner makes similar arguments regarding its challenges to claims 6–17 that use Fuller as the primary asserted reference, again making arguments responsive to Petitioner's criticisms of the merits of Patent Owner's challenges. *Id.* at 3–4. Additionally, Petitioner replies that the Texas litigation is funded by an investor. *Id.* at 5 (citing Ex. 1028).

Patent Owner replies that Petitioner's "Reply uses almost four of its five pages to respond to [Patent Owner's Preliminary Response] arguments against the merits of the challenges," which "exceeds the scope of the additional briefing requested by the [P]etitioner and granted by the Board." Prelim. Sur-reply 2–3.

As a preliminary matter, we agree that Petitioner's arguments regarding the merits of its challenges are outside the authorized scope of the Preliminary Reply. In our communication authorizing the additional briefing, we instructed the parties that "[t]he [Preliminary] Reply is limited . . . to addressing the *Fintiv* issues identified by Petitioner below." Ex. 3002, 1. Petitioner identified those issues as "Patent Owner's positions

on *Fintiv* factors 1-4 and 6, and Patent Owner's 'additional considerations' related to *Fintiv*." *Id.* Petitioner's arguments regarding the merits of its challenges exceed the allowed scope for the Preliminary Reply, and we therefore do not consider such unauthorized arguments.

Petitioner presents five grounds challenging the '067 patent, with three of its challenges addressing the independent claims. Pet. 1. For reasons provided below, we find that Petitioner establishes a reasonable likelihood of prevailing on two of these challenges. As discussed in more detail below, we find the evidence and arguments presented by Petitioner for these challenges persuasive on this preliminary record and sufficient to meet our standard for instituting *inter partes* review. For the reasons provided below, however, we are not persuaded that Petitioner establishes a reasonable likelihood of prevailing on its other challenge to the independent claims.

Patent Owner's assertions regarding Petitioner's "strategy" of filing petitions for *inter partes* review (*see* Prelim. Resp. 58–59) is speculative and, therefore, unavailing.

Accordingly, the facts underlying the merits of Petitioner's challenges to the '067 patent claims are neutral.

G. Holistic Assessment of the *Fintiv* Factors

On this record, after weighing all of the factors and taking a holistic view, we determine that the facts in this case that weigh against exercising discretion outweigh the facts that favor exercising discretion. Accordingly, we determine that the circumstances presented weigh against exercising our

discretion under 35 U.S.C. § 314(a) to deny institution of *inter partes* review based on the Texas litigation.

Additionally, given that our analysis of the first five *Fintiv* factors does not favor exercising our discretion to deny institution, we need not consider whether the Petition presents a compelling, meritorious challenge. *Commscope Techs., LLC v. Dali Wireless, Inc.*, IPR2022-01242, Paper 23 at 4–5 (PTAB Feb. 27, 2023) (designated precedential).

III. PATENTABILITY ANALYSIS

A. Principles of Law

1. Inter Partes *Review*

"In an [*inter partes* review], the petitioner has the burden from the onset to show with particularity why the patent it challenges is unpatentable." *Harmonic Inc. v. Avid Tech., Inc.*, 815 F.3d 1356, 1363 (Fed. Cir. 2016) (citing 35 U.S.C. § 312(a)(3) (requiring *inter partes* review petitions to identify "with particularity . . . the evidence that supports the grounds for the challenge to each claim")). Petitioner bears the burden of persuasion to prove unpatentability of each challenged claim by a preponderance of the evidence. 35 U.S.C. § 316(e). This burden never shifts to Patent Owner. *Dynamic Drinkware, LLC v. Nat'l Graphics, Inc.*, 800 F.3d 1375, 1378 (Fed. Cir. 2015). The Board may authorize an *inter partes* review if we determine that the information presented in the Petition and Patent Owner's Preliminary Response shows that there is a reasonable likelihood that Petitioner will prevail with respect to at least one of the claims challenged in the petition. 35 U.S.C. § 314(a).

2. Anticipation

"Under 35 U.S.C. § 102 a claim is anticipated 'if each and every limitation is found either expressly or inherently in a single prior art reference.'" *King Pharm., Inc. v. Eon Labs, Inc.*, 616 F.3d 1267, 1274 (Fed. Cir. 2010) (quoting *Celeritas Techs. Ltd. v. Rockwell Int'l Corp.*, 150 F.3d 1354, 1360 (Fed. Cir. 1998)). "Anticipation requires the presence in a single prior art disclosure of all elements of a claimed invention arranged as in the claim." *Therasense, Inc. v. Becton, Dickinson & Co*., 593 F.3d 1325, 1332 (Fed. Cir. 2010) (quoting *Connell v. Sears, Roebuck & Co.*, 722 F.2d 1542, 1548 (Fed. Cir. 1983)).

A reference inherently discloses an element of a claim "if that missing characteristic is necessarily present, or inherent, in the single anticipating reference." *Schering Corp. v. Geneva Pharm.*, 339 F.3d 1373, 1377 (Fed. Cir. 2003) (citing *Cont'l Can Co. USA, Inc. v. Monsanto Co.*, 948 F.2d 1264, 1268 (Fed. Cir. 1991)). "Inherency, however, may not be established by probabilities or possibilities. The mere fact that a certain thing *may* result from a given set of circumstances is not sufficient." *Therasense*, 593 F.3d at 1332 (quoting *Cont'l Can*, 948 F.2d at 1269).

3. Obviousness

A patent claim is unpatentable under 35 U.S.C. § 103(a) if the differences between the claimed subject matter and the prior art are such that the subject matter, as a whole, would have been obvious at the time the invention was made to a person having ordinary skill in the art to which the subject matter pertains. *KSR Int'l Co. v. Teleflex Inc.*, 550 U.S. 398, 406 (2007). The question of obviousness is resolved on the basis of underlying

factual determinations including (1) the scope and content of the prior art, (2) any differences between the claimed subject matter and the prior art, (3) the level of skill in the art, and (4) when in evidence, any objective evidence of nonobviousness.[4] *Graham v. John Deere Co.*, 383 U.S. 1, 17–18 (1966).

B. Level of Ordinary Skill in the Art

The level of ordinary skill in the art is "a prism or lens" through which we view the prior art and the claimed invention. *Okajima v. Bourdeau*, 261 F.3d 1350, 1355 (Fed. Cir. 2001). The person of ordinary skill in the art is a hypothetical person presumed to have known the relevant art at the time of the invention. *In re GPAC Inc.*, 57 F.3d 1573, 1579 (Fed. Cir. 1995). In determining the level of ordinary skill in the art, we may consider certain factors, including: "(1) the educational level of the inventor; (2) type of problems encountered in the art; (3) prior art solutions to those problems; (4) rapidity with which innovations are made; (5) sophistication of the technology; and (6) educational level of active workers in the field." *Best Med. Int'l, Inc. v. Elekta Inc.*, 46 F.4th 1346, 1353 (Fed. Cir. 2022) (citations omitted). "The patent's purpose can also be informative." *Id.*

Petitioner contends that a person having ordinary skill in the art at the time of the invention "would have had a Bachelor's degree in electrical engineering, computer engineering, computer science, or a related field and two years of practical experience in technologies involved with categorizing media including images and applying metadata to such images." Pet. 7

[4] At this stage of the proceeding, the parties have not directed us to any such objective evidence.

(citing Ex. 1002 ¶¶ 3–19, 33). Petitioner asserts that such an artisan would have had "familiarity with software for automatically generating metadata from audio and images (*e.g.*, speech-to-text and image recognition)," performed "work done in ensuring associations were maintained between metadata and images," and "standardized techniques for associating metadata with images and various known data 'container' formats." *Id.* (citing Ex. 1002 ¶¶ 12, 33).

Patent Owner does not contest Petitioner's proffered definition of the level of ordinary skill in the art or offer a definition of its own. *See generally* Prelim. Resp.

We find Petitioner's description to be consistent with the problems and solutions disclosed in the '067 patent and prior art of record, and adopt it as our own for purposes of this Decision. *See, e.g.*, *In re GPAC Inc.*, 57 F.3d at 1579 (approving the determination of the level of ordinary skill in the art by appeal to the references of record).

C. Claim Construction

In an *inter partes* review, claims are construed using the same claim construction standard that would be used to construe the claims in a civil action under 35 U.S.C. § 282(b), including construing the claims in accordance with the ordinary and customary meaning of such claims as understood by one of ordinary skill in the art and the prosecution history pertaining to the patent. 37 C.F.R. § 42.100(b). "[T]he ordinary and customary meaning of a claim term is the meaning that the term would have to a person of ordinary skill in the art in question at the time of the invention" and "after reading the entire patent." *Phillips v. AWH Corp.*, 415

F.3d 1303, 1313, 1321 (Fed. Cir. 2005) (en banc). In addition to the specification and prosecution history, we also consider use of the terms in other claims and extrinsic evidence including expert and inventor testimony, dictionaries, and learned treatises, although extrinsic evidence is less significant than the intrinsic record. *Id.* at 1312–17. Usually, the specification is dispositive, and it is the single best guide to the meaning of a disputed term. *Id.* at 1315.

"The Board is required to construe 'only those terms . . . that are in controversy, and only to the extent necessary to resolve the controversy.'" *Realtime Data, LLC v. Iancu*, 912 F.3d 1368, 1375 (Fed. Cir. 2019) (alteration in original) (quoting *Vivid Techs., Inc. v. Am. Sci. & Eng'g, Inc.*, 200 F.3d 795, 803 (Fed. Cir. 1999)).

Petitioner contends that "[n]o formal claim constructions are needed." Pet. 2.

Patent Owner does not propose a definition for any claim term. *See generally* Prelim. Resp.

For purposes of this Decision, and based on the record before us, we determine that no construction of any term is necessary. We note that this determination does not preclude the parties from arguing their proposed constructions of the claims during trial. Indeed, the parties are hereby given notice that claim construction, in general, is an issue to be addressed at trial. A final determination as to claim construction will be made at the close of the proceeding, after any hearing, based on all the evidence of record.

D. Overview of the Asserted Prior Art

1. Rothschild

Rothschild relates to "devices, systems and methods for embedding and retrieving information in digital images and using the information to organize, process and control the digital images." Ex. 1007 ¶ 3. Rothschild recognizes that cataloging photographs manually is an extensive process that requires a significant amount of time, and that this problem has been exacerbated by the advent of digital cameras. *Id.* ¶¶ 5–6. Rothschild purports to improve upon the prior art by providing a system and method of organizing, controlling, and manipulating digital images. *Id.* ¶ 9.

Rothschild discloses a device, such as a digital camera or mobile phone, for capturing images. Ex. 1007 ¶¶ 25, 42. Figures 1A and 1B illustrate an embodiment of the device and are reproduced below.

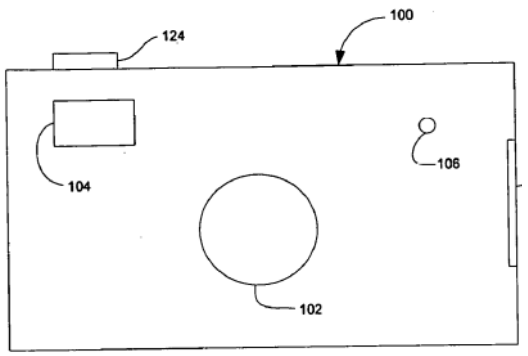

FIG. 1A

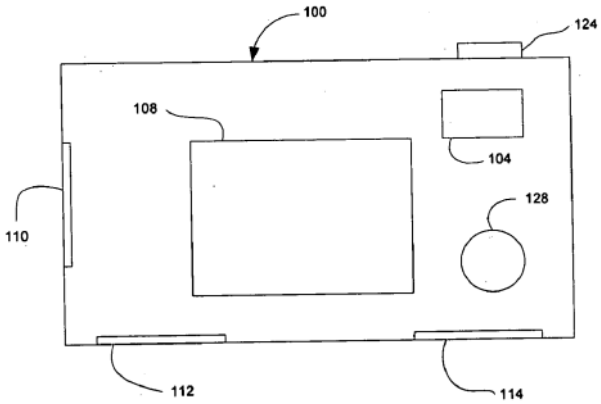

FIG. 1B

Figures 1A and 1B show front and rear views, respectively, of device 100. *Id.* ¶¶ 25–26. The device includes lens 102 for use in capturing an image, viewfinder 104, and "microphone 106 for acquiring audio, from the user of the device or from the subject of the image, which may be associated with

the image." *Id.* ¶ 25. Display module 108 displays a captured image and facilitates "user input of information to be associated with a digital image." *Id.* ¶ 26. The device also includes "storage module 110 for storing a plurality of images" and "transmission module 112 for transmitting the plurality of images to another device." *Id.*

In use, the device user takes several pictures. Ex. 1007 ¶ 47. A capture module captures the images. *Id.* ¶ 29. The capture module includes an analog-to-digital (A/D) converter that converts the images into digital form. *Id.* The digital images may be processed, such as by enhancing and compressing the images, and the processed images are stored in a storage module. *Id.* The user can enter information about the images using an input module. *Id.* ¶ 47. The input module accepts user input via touch screen that overlays display module 108 or via microphone 106. *Id.* ¶ 31. The microphone may be coupled to an A/D converter that converts the user's spoken audio information into a digital format. *Id.* Furthermore, the input module may include a voice recognition processor that translates the digital human voice into alpha numeric characters for user input. *Id.* For example, for a picture of the user's "baby in Las Vegas," the user may "record an audio file indicating: 'this is a picture of my baby girl Samantha here in Las Vegas. Boy is she cute.'" *Id.* ¶¶ 47, 49. The device obtains time and date information, user identification information, and the number of the digital image, and stores this information with the audio file either as a separate information file associated with the image or appended to the digital image file. *Id.* ¶¶ 51–52.

The images and associated files are then transferred to the user's computer, which sorts and stores the images and associated information in

the location specified by the user. Ex. 1007 ¶¶ 53–54. The computer parses the associated information and stores the data in a relational database. *Id.* ¶ 63, Fig. 7. The computer may be used to print an image with symbology that encodes the location of the associated information. *Id.* ¶ 39. The device can be scanned over the printed image to read the symbology and retrieve the associated information. *Id.* ¶ 57. This allows, for example, the device to retrieve and play the audio file. *Id.* ¶ 58.

The device may include a user verification module for verifying an identity of the device user. Ex. 1007 ¶ 33. The user verification module may include an identify capture device, such as a facial recognition reader. *Id.* The identity capture device collects information from the user and compares the collected information to information that has previously been stored in the device memory. *Id.* For example, the capture module may capture an image of the user's face, which may then be processed by a facial recognition algorithm executed by the user verification module. *Id.*

2. Anderson

Anderson relates to categorizing, storing and presenting digital images. Ex. 1008, 2:42–43. Anderson's system allows "a user to categorize images at the time of capture with multiple categories of information by merely speaking into the camera." *Id.* at 2:16–19. "[T]he user's voice annotations are automatically recognized, translated, and stored in a database . . . ." *Id.* at 2:19–22. Figure 1 illustrates an exemplary system and is reproduced below.

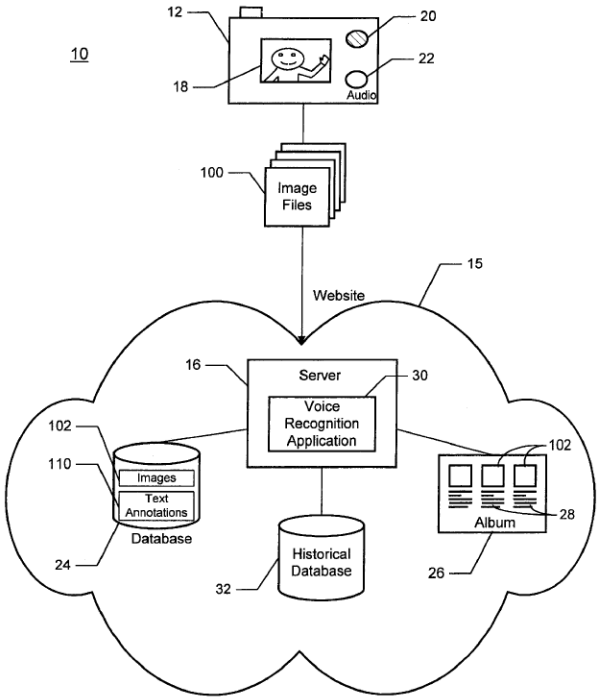

FIG. 1

Figure 1 shows system 10, including digital camera 12 for capturing digital images. *Id.* at 2:56–57. The digital camera includes microphone 20 and audio button 22 for recording sound. *Id.* at 2:58–61. A user may upload image files 100 to website 15, where web server 16 includes voice recognition application 30 and database 24. *Id.* at 2:61–65. In use, a user may record category-specific voice annotations on the digital camera, which "are then translated by voice recognition into text annotations." *Id.* at 3:10–15. An image and its corresponding text annotations are stored and indexed in database 24 "so that the images may be found more easily." *Id.* at 3:15–19.

3. Fuller

Fuller relates to the automatic extraction of metadata descriptions of digital multimedia content such as still images and video. Ex. 1003,

2:53–55. Figure 1 illustrates "a generic digital capture system . . . combined with an embedded, real-time, content-based analysis engine and data output" and is reproduced below. *Id.* at 4:49–52.

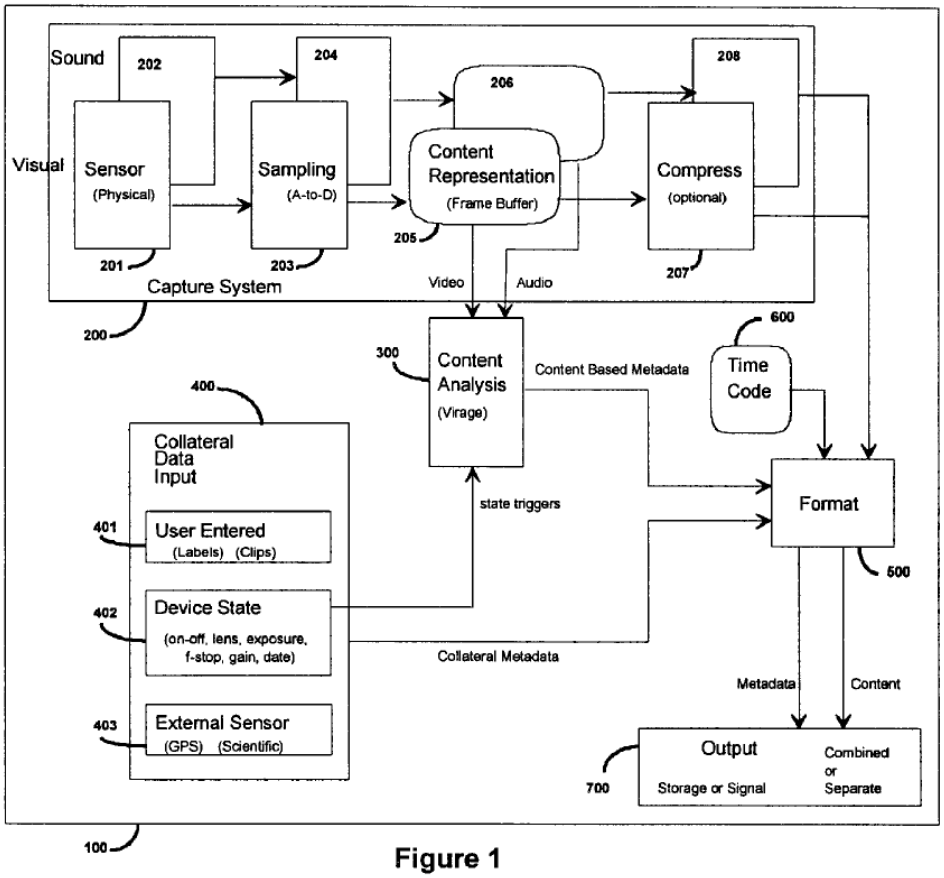

Figure 1

Figure 1 shows the overall system architecture digital capture system 100, which includes visual and audio capture subsystem 200, content-based metadata generation engine 300, collateral data gathering block 400, data formatting unit 500 with optional time code marking 600, and data output and/or storage 700. *Id.* at 5:23–29.

Visual and audio capture subsystem 200 may include visual sensor 201 and microphone 202. Ex. 1003, 5:32–34. The output from these sensors is converted to digital form and may be filtered by analog-to-digital

units 203 (visual), 204 (audio), and the digital content is stored in memory units 205, 206, respectively. *Id.* at 5:34–38. The digital content may then optionally be compressed prior to being formatted at unit 500 for output or storage. *Id.* at 5:38–42.

Content-based analysis engine 300 accesses the digital representation of visual and audio content from memory units 205, 206 and extracts metadata from the content. Ex. 1003, 5:43–45. The engine performs "sophisticated analysis of multimedia content and generate[s] metadata descriptions that can be effectively used to index the content for downstream applications such as search and browse." *Id.* at 2:58–62. The content-based analysis engine may be "the Virage audio and video engines" that "are further described in U.S. [P]atent [A]pplication[] . . . No. 09/134,500" (Ex. 1005, "the '500 application"). *Id.* at 7:53–59. This engine includes a speech transcription module that processes speech and that may output recognized keywords or the full text of the transcription process, which may be used directly as metadata. Ex. 1005, 15:24–16:9.[5]

Collateral data gathering block 400 gathers various forms of collateral metadata (metadata that is not based on the content), including user-provided information at block 401, device state information at block 402, and external sensor information at block 403. Ex. 1003, 5:49–57. "Content-based metadata from the analysis engine 300 is joined by collateral metadata (not based on the digital content) from block 400 in the formatting unit 500." *Id.* at 5:58–60. The metadata and related digital content may be combined or stored separately. *Id.* at 6:13–34.

[5] We cite to the application pagination rather than the exhibit pagination.

4. Camahan

Camahan relates to "a metabase specifically designed for the organization, management and manipulation of digital media assets." Ex. 1010 ¶ 2. Camahan's metabase is "a collection of node objects which can be implemented as XML elements and organized in a tree-like or hierarchical structure that emanates from a single root node, and stored in disk drive storage or internal cache storage." *Id.* ¶ 90. In the metabase, a "folder represents a generic container," and "[e]ach folder 201 may contain child folders 205, 207, 209 allowing the metabase to be organized in a hierarchy similar to a conventional file system." *Id.* ¶ 92; *see also id.* at Fig. 2. Further, a folder "may also contain one or more binders," where each binder "represents a media asset within the metabase and 'binds' together all of the metadata related to that asset." *Id.* ¶ 96. A binder, in turn, may contain "one or more content objects each describing a different aspect . . . of the media asset." *Id.* ¶ 100. For example, "[a] label object 211 contains structured metadata that describes the entire media asset such as the title, rating, author, etc.," and "[a] track object 213 contains structured metadata that occur at specific points or during specific intervals within the media asset such as closed captions, key frames, or speech-to-text extraction." *Id.* ¶¶ 104, 107.

5. Davis

Davis relates to associating "data with a media signal by encoding the data, a link to the data, or a combination of both into the media signal." Ex. 1013, code (57). Davis's system associates data in images or other media signals using steganographic and other techniques. *Id.* ¶ 24. The

data, which may describe, for example, objects in the image or the context of the image, can be encoded within the image or stored elsewhere. *Id.* ¶¶ 15–23, 25. For example, the image can be uploaded to an image database and the metadata can be uploaded to a metadata database. *Id.* ¶ 89. Alternatively, the metadata can be stored in a database integrated with the image database. *Id.* ¶ 173.

E. Asserted Obviousness Based on Rothschild and Anderson

Petitioner argues that claims 6–17 would have been obvious in view of Rothschild and Anderson. Pet. 29–43. In support of its showing, Petitioner relies upon the Bederson Declaration. *Id.* (citing Ex. 1002). We have reviewed Petitioner's assertions and supporting evidence. For the reasons discussed below, and based on the record before us, we are not persuaded that Petitioner demonstrates a reasonable likelihood of prevailing in showing that at least one challenged claim would have been obvious in view of the combination of Rothschild and Anderson.

Independent claim 6 recites, in relevant part, "a media data converter for converting the the received digital audio to a text based searchable file as a text context tag." Ex. 1001, 11:58–60. Independent claim 13 contains a substantially similar recitation. *Id.* at 12:51–52. Petitioner maps Rothschild's input module 124, auxiliary input computer module 126, and user verification module 132, collectively, to the recited media data converter. Pet. 34. Petitioner argues that "Rothschild's input module includes [a] voice recognition processor that converts speech to text" and "Rothschild's user input data can be stored as a file associated with the captured image." *Id.* at 34–35 (citing Ex. 1007 ¶ 32; Ex. 1002 ¶ 182).

Petitioner asserts that "[t]ext derived from voice recognition is a text context tag because . . . it is a searchable element derived from a context description element (*i.e.*, speech 'regarding the pictures')." *Id.* at 35 (citing Ex. 1007 ¶ 47; Ex. 1002 ¶¶ 135, 161). Petitioner relies on "Jim Jones," shown in Figure 7, as an example of a context tag. *Id.* Continuing, Petitioner argues that it would have been obvious to an ordinarily skilled artisan "to use Rothschild's input module to convert received digital audio to a text based searchable file as a text context tag because doing so would allow for descriptive information to be associated with the image for later search and retrieval using a text-based search query . . . as taught by Anderson." *Id.* (citing Ex. 1002 ¶¶ 185–186, 179–180).

Patent Owner refers to this challenge as "challenge 2" and the challenge to disclaimed claims 1–5 as "challenge 1," and argues that Rothschild does not disclose converting a digital audio file into a text-based searchable file. Prelim. Resp. 29–38. First, Patent Owner argues that "[t]he [P]etition does not clearly identify what is the 'external audio information' or corresponding 'stored digital audio.'" *Id.* at 29. Patent Owner asserts that "[i]t appears that the [P]etition and Dr. Bederson assume that the 'external audio information' in challenge 2 is the same as in challenge 1." *Id.* at 31 (citing Ex. 1002 ¶ 171). Patent Owner argues that this mapping of the recited external audio information fails because "there is no disclosure in Rothschild that the user of the camera speaks in association with the user-verification selfie." *Id.* at 29; *see also id.* at 31 (stating that "there is no indication in Rothschild that the user . . . speaks his name (or anything else) to the camera in connection with user verification" and "Rothschild does *not* disclose voice recognition as a user-verification technique").

Rothschild discloses a user entering information via voice recognition software regarding pictures taken by the user. Ex. 1007 ¶ 47. However, Petitioner does not map these "pictures" to the recited image. Rather, Petitioner relies on an image of the device user taken for verifying the user's identity. Pet. 30–31 (citing Ex. 1007 ¶ 33). For the recited audio information, Petitioner relies on its showing made for challenge 1 (*id.* at 30), in which Petitioner maps "audio 'from the user of the device or from the subject of the image'" to the recited audio information (*id.* at 13 (citing Ex. 1007 ¶¶ 25, 31, 42, 49, Figs. 1A, 1B, 3A, 3B)). Thus, the Petition relies on audio acquired from the user or subject (*id.*) that is first converted to digital form (*id.* at 14) and then converted to text (*id*. at 34–35). But this audio is not associated with the user verification image, which the Petition maps to the recited image. *Id.* at 30–31. Neither Petitioner nor its declarant appears to explain adequately how Rothschild discloses a user entering speech regarding the user verification image. Thus, Rothschild does not appear to support Petitioner's assertions.

Independent claim 6 also recites, in relevant part, "a media data converter for . . . creating an image recognition searchable context tag with image recognition of at least a portion of the digital image." Ex. 1001, 11:58–62. Independent claim 13 contains a substantially similar recitation. *Id.* at 12:51–55. Petitioner argues that Rothschild's user verification module 132 "uses facial recognition to identify users of the device and then stores a tag associated with that user—*e.g.*, 'John Jones' (*see* FIG. 7) to associate it with images captured by that user." Pet. 37 (citing Ex. 1007 ¶¶ 33, 66, 83–84). Petitioner argues that "[t]he user's name is an image recognition context tag because it is derived from an image." *Id.*

Patent Owner argues that "nothing in Rothschild states or implies that the name of the recognized individual in the user-verification image is used as 'an image recognition searchable context tag.'" Prelim. Resp. 39. Patent Owner argues that "Rothschild does not disclose that a user image taken for user verification is treated like all the other images." *Id.*

Petitioner's mapping of the recited image here ("images captured by that user" (Pet. 37)) is different than and incompatible with Petitioner's prior mapping of the recited image ("an image of the face of the user" (*id.* at 31)). Thus, Petitioner appears to fail to explain adequately how Rothschild supports its contentions.

Additionally, neither Petitioner nor its declarant appears to explain adequately how Rothschild stores the user's name in association with the verification picture. Rothschild discloses that its "user verification module 132 will indicate and verify the identity of the user of the device 100 at the time of the image capture." Ex. 1007 ¶ 33. This verification may use a "facial recognition reader" that "will collect information on the user to be compared to information that has previously been stored in the device's memory." *Id.* "[C]apture module 122 may capture am image of the face of the user which may then be processed by a facial recognition algorithm executed by the user verification module 132." *Id.* However, Rothschild does not appear to disclose storing a context tag associated with that user's verification image as asserted by Petitioner. *See* Pet. 37. Petitioner's reference to Rothschild's locational image verification device to transmit the user's name in association with a photograph taken by the user (*id.* (citing Ex. 1007 ¶¶ 83–84)) also fails to explain adequately how a tag is associated with the user verification image.

For at least these reasons, we question whether Petitioner demonstrates a reasonable likelihood of prevailing in showing that independent claims 6 and 13 and their dependent claims 7–12 and 14–17 would have been obvious in view of Rothschild and Anderson.

F. Assertions Based on Fuller

Petitioner argues that claims 6–9 and 13–17 are anticipated by Fuller or are rendered obvious based on the combined teachings of Fuller and Camahan. Pet. 43–60. In support of its showing, Petitioner relies upon the Bederson Declaration. *Id.* (citing Ex. 1002). We have reviewed Petitioner's assertions and supporting evidence. For the reasons discussed below, and based on the record before us, we are persuaded that Petitioner demonstrates a reasonable likelihood of prevailing in showing that at least one challenged claim is anticipated by Fuller or rendered obvious in view of Fuller and Camahan.

1. The Preamble

Independent claim 6 recites "[a] system for capturing image and audio information for storage." Ex. 1001, 11:37–38. Independent claim 13 contains a substantially similar recitation. *Id.* at 12:33–34. Petitioner argues that Fuller discloses such a system because it stores digital media content and metadata. Pet. 44 (citing Ex. 1003, 4:23–34, 5:22–25, 8:35–37, Fig. 6).

Patent Owner does not contest this aspect of the Petition. *See generally* Prelim. Resp.

Fuller discloses a digital capture system that includes a visual and audio capture subsystem. Ex. 1003 5:23–28.

Accordingly, for the foregoing reasons and on this record, to the extent the preamble is limiting, Fuller supports Petitioner's contentions.

2. The Capture Device Recitation

Independent claim 6 recites "a capture device." Ex. 1001, 11:39. Independent claim 13 does not contain a substantially similar recitation. Ex. 1001, 12:33–60. Petitioner maps Fuller's digital capture system to the recited capture device. Pet. 44 (citing Ex. 1003, 4:49–52, 5:22-41, code (57). Fig. 1; Ex. 1002 ¶ 206).

Patent Owner does not contest this aspect of the Petition. *See generally* Prelim. Resp.

Fuller discloses a digital capture system that includes a visual and audio capture subsystem. Ex. 1003 5:23–28.

Accordingly, for the foregoing reasons and on this record, Fuller supports Petitioner's contentions.

3. The Storage Recitation

Independent claim 6 recites "internal storage." Ex. 1001, 11:40. Independent claim 13 contains a substantially similar recitation. *Id.* at 12:35. Petitioner maps Fuller's memory units 205, 206, storage 700, and internal storage unit 702, collectively, to the recited internal storage. Pet. 44–45 (citing Ex. 1003 5:23–28, 5:34–38, 6:23–31, 7:35–38, 8:8–12; Ex. 1002 ¶ 207).

Patent Owner does not contest this aspect of the Petition. *See generally* Prelim. Resp.

Fuller discloses that its digital capture system 100 stores digital visual data in memory unit 205, stores digital audio data in memory unit 206, and

stores formatted digital content in storage 700. Ex. 1003 5:36–40. In an embodiment of a video camera capture device, storage 700 is referred to as internal storage unit 702. *Id.* at 8:8–10, Fig. 4.

Accordingly, for the foregoing reasons and on this record, Fuller supports Petitioner's contentions.

4. The Microphone Recitation

Independent claim 6 recites "a microphone interfaceable with [an] external audio information source that generates external audio information and a first data converter for capturing the first external audio information from the microphone." Ex. 1001, 11:41–45. Independent claim 13 contains a substantially similar recitation. *Id.* at 12:36–39. Petitioner maps Fuller's microphone 202 to the recited microphone and analog-to-digital unit 204 to the recited first data converter. Pet. 45 (citing Ex. 1003, 5:29–35, 7:34–37; Ex. 1002 ¶ 208).

Patent Owner does not contest this aspect of the Petition. *See generally* Prelim. Resp.

Fuller's digital capture system 100 includes "a microphone 202 if audio is being captured." Ex. 1003, 5:32–34. Fuller discloses that the output of microphone 202 is converted to digital form by analog-to-digital unit 204. *Id.* at 5:34–36.

Accordingly, for the foregoing reasons and on this record, Fuller supports Petitioner's contentions.

5. The Camera Recitation

Independent claim 6 recites "a camera interfacing with [an] external image source to capture an image therefrom." Ex. 1001, 11:46–47.

Independent claim 13 contains a substantially similar recitation. *Id.* at 12:40–41. Petitioner maps Fuller's digital capture system to the recited camera, noting that it may include visual sensor 201. Pet. 46 (citing Ex. 1003, 4:49–51, 5:29–32, 7:31–34, 8:16–18; Ex. 1002 ¶¶ 210–211).

Patent Owner does not contest this aspect of the Petition. *See generally* Prelim. Resp.

Fuller's digital capture system 100 includes visual and audio capture subsystem 200, which includes visual sensor 201 that captures images. Ex. 1003, 5:30–34, 7:33–35.

Accordingly, for the foregoing reasons and on this record, Fuller supports Petitioner's contentions.

6. The First Data Converter Recitation

Independent claim 6 recites "the first data converter processing the captured external audio information and storing it in a first digital audio format as stored digital audio in internal storage within the capture device." Ex. 1001, 11:48–51. Independent claim 13 contains a substantially similar recitation. *Id.* at 12:46–48. Petitioner argues that Fuller's analog-to-digital unit 204 "processes the captured external audio information by digitizing it" and "stores the captured external audio information in internal storage in the capture device by outputting it to a 'sound buffer 206.'" Pet. 47 (citing Ex. 1003, 5:35–37, 7:40–43, 7:51, Figs. 1, 4–5; Ex. 1002 ¶ 212).

Patent Owner first argues that Petitioner fails to show the recited processing in Fuller. Prelim. Resp. 45–46. According to Patent Owner, "[w]hile Fuller does teach that 'audio is captured by a microphone 202,' that is digitized audio that is captured." *Id.* at 46 (citing Ex. 1003, 7:34–35).

Fuller's microphone 202 captures audio information in the form of sound waves, analog-to-digital unit 204 processes the captured sound into digital format, and memory 206 stores the digitized content. Ex 1003, 5:30–38, 7:35–38. The "digitization of signals from the microphone" noted by Patent Owner (*see* Prelim. Resp. 45) is the "processing." *See* Pet. 47. Petitioner's mapping of digitization to the recited processing is consistent with the processing disclosed in the '067 patent. *See, e.g.*, Ex. 1001, 6:56–59 ("One method for collecting the audio information, for example, is to utilize a microphone 210 that will capture the information and then digitize it in a digitizing block 212 utilizing an analog-to-digital converter, for example.").

Next, Patent Owner argues that Fuller does not disclose storing audio information in a first digital audio format. Prelim. Resp. 47–48. Patent Owner acknowledges that Fuller discloses digitizing audio information "in 'a sequence of 8-bit or 16-bit waveform samples at a suitable sampling frequency, such as 44.1 kHz (for CD quality audio),'" but argues that this "is not a disclosure of 'a first digital audio format.' Quite to the contrary, such a sequence of samples is just that – a sequence of samples, sans any format." *Id.* at 47 (quoting Ex. 1003, 7:40–43).

As noted above, Fuller discloses that its analog-to-digital unit 204 converts the captured audio information into digital form and stores it in memory unit 206. Ex. 1003, 5:30–38. We understand Fuller's disclosure of "digital form" to be equivalent to a digital format. Indeed, it is difficult to envision how digital audio information can be stored in memory if it is not in some digital format. That Fuller might not disclose explicitly what that format is does not indicate that there is no such format.

Accordingly, for the foregoing reasons and on this record, Fuller supports Petitioner's contentions.

7. The Processing Recitation

Independent claim 6 recites "the camera for processing the captured image and storing it as a stored digital image in internal storage." Ex. 1001, 11:51–53. Independent claim 13 contains a substantially similar recitation. *Id.* at 12:49–50. Petitioner argues that Fuller's analog-to-digital unit 203 converts the output of visual sensor 201 into digital form and "[t]he digitized image 'is then stored in a memory unit 205." Pet. 47–48 (citing Ex. 1003, 5:31–38, 7:33–40, Figs. 1, 4; Ex. 1002 ¶ 213).

Patent Owner does not contest this aspect of the Petition. *See generally* Prelim. Resp.

The output of Fuller's visual sensor 201 is converted into digital form by analog-to-digital unit 203 and the digitized content is stored in memory 205. Ex 1003, 5:30–38.

Accordingly, for the foregoing reasons and on this record, Fuller supports Petitioner's contentions.

8. The Data Capture Device Recitation

Independent claim 6 recites "a data capture device for capturing, as captured data, location information, and time information associated with at least the capture of the image and storing the captured data as stored captured data." Ex. 1001, 11:54–57. Independent claim 13 contains a substantially similar recitation. *Id.* at 12:42–45. Petitioner maps Fuller's collateral data gathering block 400 to the recited data capture device and argues that "it is used to capture 'collateral metadata' such as 'time/date' and

'position derived from GPS satellites.'" Pet. 48 (citing Ex. 1003, 4:15–20, 5:22–28, 5:49–57, Fig. 1; Ex. 1002 ¶ 214). Petitioner argues that the captured data "is joined with content-based metadata in the formatting unit 500" and "then stored in storage 700." *Id.* at 49 (citing Ex. 1003, 5:58–6:22, 6:23–27, 8:1–10, 8:35–9:47, Fig. 6; Ex. 1002 ¶ 215).

Patent Owner does not contest this aspect of the Petition. *See generally* Prelim. Resp.

Fuller discloses that collateral data gathering block 400 gathers collateral metadata including device state information such as "time/date" and external sensor information such as "position derived from GPS satellites." Ex. 1003, 5:49–57. "Content-based metadata from the analysis engine 300 is joined by collateral metadata . . . from block 400 in the formatting unit 500." *Id.* at 5:58–60. The metadata and related digital content may be combined or stored separately. *Id.* at 6:13–34.

Accordingly, for the foregoing reasons and on this record, Fuller supports Petitioner's contentions.

9. The Converting Recitation

Independent claim 6 recites "a media data converter for converting the the received digital audio to a text based searchable file as a text context tag." Ex. 1001, 11:58–60. Independent claim 13 contains a substantially similar recitation. *Id.* at 12:51–52. Petitioner maps Fuller's content-based analysis engine 300 to the recited second data converter and argues that it includes "the 'Virage Audio Engine' described in the incorporated '500 application." Pet. 50 (citing Ex. 1003, 2:53–3:8, 5:43–60, 7:51–59, 8:16–18, 8:51–55, Figs. 1, 4–5; Ex. 1002 ¶ 217). Petitioner argues that the

'500 application discloses that the audio engine includes audio analysis feature extractor 516, which

> classifies audio input as "speech," passes the audio signal to "a speech transcription module" that interfaces "with any available Speech Recognition Engine 624" . . . , and uses a "Keyword Spotting Feature Extractor 640" to "selectively identify keywords of interest and produce a text output 648 limited to the keywords specified by a Domain Dictionary 642."

Id. at 50–51 (citing Ex. 1005, 15:6–7, 15:14–16:9, Figs. 9–10).[6] Petitioner asserts that "[t]he resulting text defines text tags including full text or keywords" that are "stored in a text-based searchable file which contains 'tracks' of metadata." *Id.* at 51 (citing Ex. 1005, 11:1–3, 11:12; Ex. 1002 ¶ 219). Petitioner also argues that the text is searchable because Fuller discloses that "the 'content-based signal analysis' is 'added to a metadata batch under construction.'" *Id.* at 52 (citing Ex. 1003, 2:53–62, 8:45–57; Ex. 1002 ¶ 220).

Petitioner also relies on Camahan to provide additional teaching regarding text context tags. Pet. 58–60. Petitioner argues that Camahan teaches "storing text-based tracks in searchable XML files." *Id.* at 58. Petitioner argues that Camahan discloses a metabase of node objects, one such object being a binder that includes track objects that contain structured metadata such as speech-to-text extractions stored as searchable XML files. *Id.* at 58–59 (citing Ex. 1010 ¶¶ 90, 96, 102, 107–108, 155; Ex. 1002 ¶ 239). Petitioner argues that it would have been obvious to an ordinarily skilled

[6] On pages fifty to fifty-one of the Petition, Petitioner's first citation to Exhibit 1005 refers to the exhibit pagination and Petitioner's second citation refers to the application pagination. For consistency and ease of reading, we convert Petitioner's citations to the application pagination.

artisan to store Fuller's keyword tracks as searchable XML files because "Fuller expressly suggests doing so" and "files were known data containers for metadata." *Id.* at 59 (citing Pet. 54–55; Ex. 1010 ¶ 155; Ex. 1002 ¶ 240). Petitioner also argues that the proposed modification "would have merely been the simple substitution of Fuller's tracks for a track defined as a .xml file using conventional techniques that were accessible to the [ordinarily skilled artisan]." *Id.* at 60 (citing Ex. 1002 ¶ 242).

Patent Owner first argues that "Fuller does not teach that the output of the analysis engines 300 or 301 is a file" and that "the '500 application teaches that the output of the extractor 516 is full text or keywords, not files." Prelim. Resp. 43–44 (citing Ex. 1003, 6:24–28, 6:66–7:2, Fig. 3; Ex. 1005, 15:6–16:17, Fig. 10).

Patent Owner's arguments are not availing. The '500 application discloses that its audio analysis feature extractor passes digitized speech data to a speech transcription module that interfaces with a speech recognition engine and outputs the full text of the transcription process, which may be used directly as metadata. Ex. 1005, 15:6–16:3. Alternatively, the output can be limited to keywords recognized in the text. *Id.* at 16:3–5. The '500 application discloses that "the metadata may be output in a variety of formats such as Virage Data Format (VDF) 562, HTML 564, XML 566, SMIL 568 and other 570." *Id.* at 13:26–28. Moreover, Fuller discloses that that the metadata extracted by the engines is used for search and browse functions. *See, e.g.*, Ex. 1003, 2:53–62.

Regarding the obviousness challenge based on Fuller and Camahan, Patent Owner acknowledges that "Camahan discloses XML files," but argues that "the tracks relied on by the [P]etition are not described as files."

Prelim. Resp. 49 (citing Ex. 1010 ¶¶ 153–157, 170). According to Patent Owner, "a track is just data, not a file." *Id.*

As explained above, Petitioner relies on Camahan to teach "storing [Fuller's] text-based tracks in searchable XML files." Pet. 58. Patent Owner's arguments do not address the combination of Fuller and Camahan as set forth in the Petition. Moreover, as noted above, Fuller, through the '500 application, discloses storing metadata in XML files. Ex. 1005, 13:26–28.

Accordingly, for the foregoing reasons and on this record, Fuller and the combination of Fuller and Camahan support Petitioner's contentions. We determine that Petitioner sets forth reasoning with rational underpinning as to why a person having ordinary skill in the art would have combined the teachings of Fuller and Camahan. *See* Pet. 59–60.

10. The Creating Recitation

Independent claim 6 recites the "media data converter for . . . creating an image recognition searchable context tag with image recognition of at least a portion of the digital image." Ex. 1001, 58, 60–62. Independent claim 13 contains a substantially similar recitation. *Id.* at 12:51, 53–55. Petitioner argues that Fuller's content-based analysis engine 300 performs metadata extraction from the digital image through face and character recognition and produces a searchable context tag for the image based on the extracted metadata. Pet. 52–53 (citing Ex. 1003, 1:59–64, 2:53–3:8, 5:35–36, 5:43–45, 5:58, 8:45–57; Ex. 1002 ¶ 224).

Patent Owner does not contest this aspect of the Petition. *See generally* Prelim. Resp.

Fuller discloses that its content-based analysis engine 300 accesses the digital representation of visual content from memory unit 205 to perform metadata extraction. Ex. 1003, 5:43–45. The generated metadata is used for search and browse functions, and may include face identification/recognition and optical character recognition. *Id.* at 2:58–3:8.

Accordingly, for the foregoing reasons and on this record, Fuller supports Petitioner's contentions.

11. The Associating Recitation

Independent claim 6 recites the "media data converter for . . . associating the text and image recognition context tags with the digital image and the captured data." Ex. 1001, 58, 62–64. Independent claim 13 contains a substantially similar recitation. *Id.* at 12:51, 55–57. Petitioner argues that Fuller's content-based analysis engine 300 "joins the content-based metadata with the captured data (*i.e.*, Fuller's 'collateral metadata') in the 'formatting unit 500'" in MPEG-7 format. Pet. 54 (citing Ex. 1003, 5:56–6:12, 8:1–5).

Patent Owner does not contest this aspect of the Petition. *See generally* Prelim. Resp.

Fuller discloses that "[c]ontent-based metadata from the analysis engine 300 is joined by collateral metadata (not based on the digital content) from block 400 in the formatting unit 500." Ex. 1003, 5:58–60. The metadata and related digital content may be combined in a variety of formats, including MPEG-7. *Id.* at 6:13–31.

Accordingly, for the foregoing reasons and on this record, Fuller supports Petitioner's contentions.

12. The Storing Recitation

Independent claim 6 recites "the internal storage storing the digital image in association with the text and image recognition context tags in addition to the stored captured data." Ex. 1001. 11:65–67. Independent claim 13 contains a substantially similar recitation. *Id.* at 12:58–60. Petitioner argues that Fuller discloses storing the combined metadata and image MPEG-7 file in internal storage unit 702. Pet. 55 (citing Ex. 1003, 6:13–14, 8:8–18, Figs. 1, 4; Ex. 1002 ¶ 228).

Patent Owner does not contest this aspect of the Petition. *See generally* Prelim. Resp.

Fuller discloses that "[t]he formatted output data of the formatting unit 500 can be handled by the output system 700 in a variety of ways," including combing the metadata and actual digital content in MPEG-7 format and storing the file in internal memory. Ex. 1003, 6:13–31.

Accordingly, for the foregoing reasons and on this record, Fuller supports Petitioner's contentions.

13. Conclusion Regarding Independent Claims 6 and 13

For the foregoing reasons, we determine that Petitioner has established a reasonable likelihood of prevailing on its assertion that independent claims 6 and 13 are anticipated by Fuller and would have been obvious in view of the combination of Fuller and Camahan.

IV. CONCLUSION

For the foregoing reasons, we determine that the information presented establishes a reasonable likelihood that Petitioner would prevail in

showing that at least one challenged claim of the ’067 patent is unpatentable. At this preliminary stage, we have not made a final determination with respect to the patentability of the challenged claims or any underlying factual and legal issues. *See TriVascular, Inc. v. Samuels*, 812 F.3d 1056, 1068 (Fed. Cir. 2016) (noting that “there is a significant difference between a petitioner’s burden to establish a ‘reasonable likelihood of success’ at institution, and actually proving invalidity by a preponderance of the evidence at trial”).

Accordingly, *inter partes* review is instituted as to all challenged, non-disclaimed claims and all proposed grounds of unpatentability. *See SAS Inst. Inc. v. Iancu*, 138 S. Ct. 1348, 1354, 1359–60 (2018); *see also PGS Geophysical AS v. Iancu*, 891 F.3d 1354, 1360 (Fed. Cir. 2018) (interpreting the statute to require “a simple yes-or-no institution choice respecting a petition, embracing all challenges included in the petition”); Patent Trial and Appeal Board Consolidated Trial Practice Guide 64 (Nov. 2019)[7] (“The Board will not institute on fewer than all claims or all challenges in a petition.”).

V. ORDER

ORDERED that pursuant to 35 U.S.C. § 314(a), an *inter partes* review of claims 6–17 of the ’067 patent is instituted with respect to all grounds set forth in the Petition; and

[7] *Available at* https://www.uspto.gov/TrialPracticeGuideConsolidated.

FURTHER ORDERED that, pursuant to 35 U.S.C. § 314(c) and 37 C.F.R. § 42.4, notice is hereby given of the institution of a trial, which commences on the entry date of this decision.

For PETITIONER:

Andrew R. Sommer
Jay Guiliano
Harry Park
Philip Hoffmann
Jenna Kuh
GREENBERG TRAURIG, LLP
sommera@gtlaw.com
jay.guiliano@gtlaw.com
parkh@gtlaw.com
hoffmannp@gtlaw.com
kuhj@gtlaw.com

For PATENT OWNER:

Matthew Phillips
Kevin Laurence
Derek Meeker
LAURENCE & PHILLIPS IP LAW
mphillips@lpiplaw.com
klaurence@lpiplaw.com
dmeeker@lpiplaw.com

John Lord
Sarah E. Spires
SKIERMONT DERBY LLP
jlord@skiermontderby.com
sspires@skiermontderby.com