US006452348B1

(12) **United States Patent**
Toyoda

(10) **Patent No.: US 6,452,348 B1**
(45) **Date of Patent: Sep. 17, 2002**

(54) **ROBOT CONTROL DEVICE, ROBOT CONTROL METHOD AND STORAGE MEDIUM**

(75) Inventor: **Takashi Toyoda**, Tokyo (JP)

(73) Assignee: **Sony Corporation**, Tokyo (JP)

(*) Notice: Subject to any disclaimer, the term of this patent is extended or adjusted under 35 U.S.C. 154(b) by 0 days.

(21) Appl. No.: **09/724,988**

(22) Filed: **Nov. 28, 2000**

(30) **Foreign Application Priority Data**

Nov. 30, 1999 (JP) 11-340466

(51) **Int. Cl.**[7] **H02K 7/14**

(52) **U.S. Cl.** **318/3**; 318/632; 700/259; 434/308

(58) **Field of Search** 318/3, 632; 446/268, 446/279, 280, 298, 299, 330; 381/110; 700/258, 259; 901/46, 47; 434/308; 463/35, 39

(56) **References Cited**

U.S. PATENT DOCUMENTS

4,717,364 A * 1/1988 Furukawa 446/175
5,493,185 A * 2/1996 Mohr et al. 318/3
5,832,189 A * 11/1998 Tow 901/47
6,160,986 A * 12/2000 Gabai et al. 434/308

* cited by examiner

Primary Examiner—Khanh Dang
(74) *Attorney, Agent, or Firm*—Frommer Lawrence & Haug LLP; William S. Frommer; Gordon Kessler

(57) **ABSTRACT**

A robot control device for controlling a robot having a substantial entertainment value is disclosed. A sensor signal processor recognizes the voice of a user, sets an association between the voice recognition result and an action of the robot, and registers the association in a behavior association table of a behavior association table memory. A behavior decision unit decides which action for the robot to take based on the behavior association table.

8 Claims, 9 Drawing Sheets

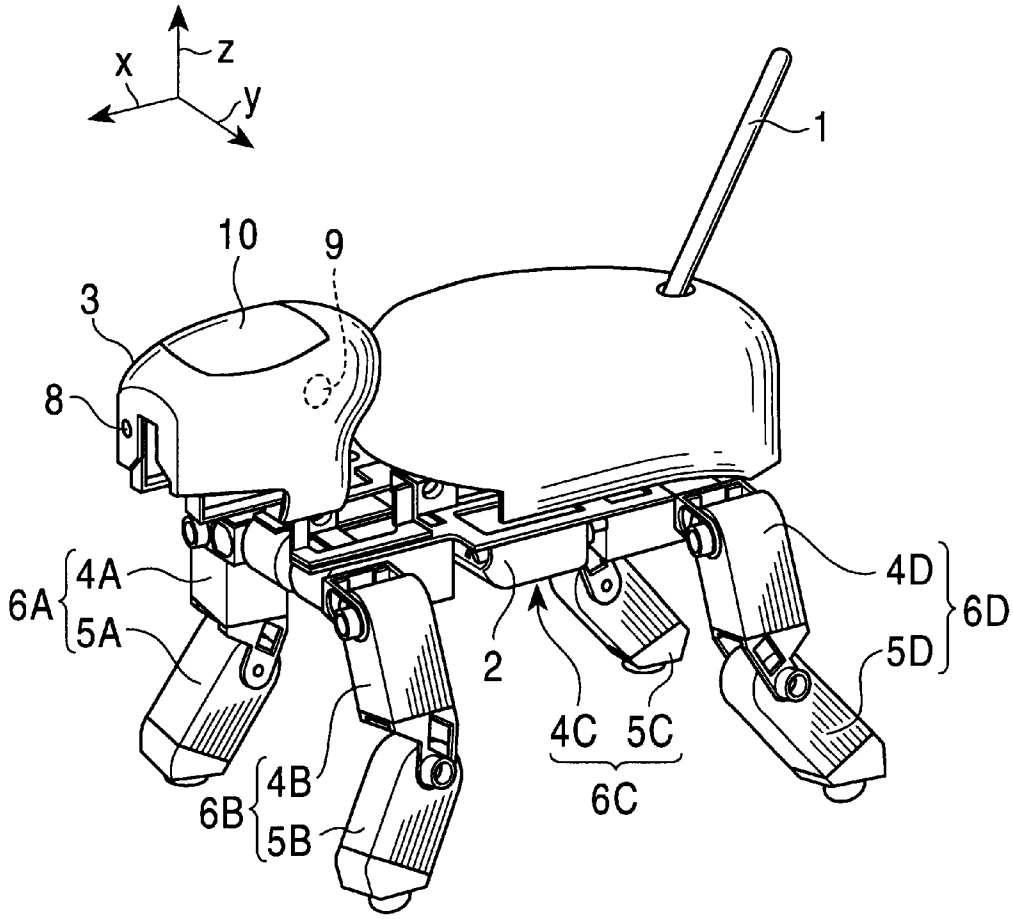

FIG. 1

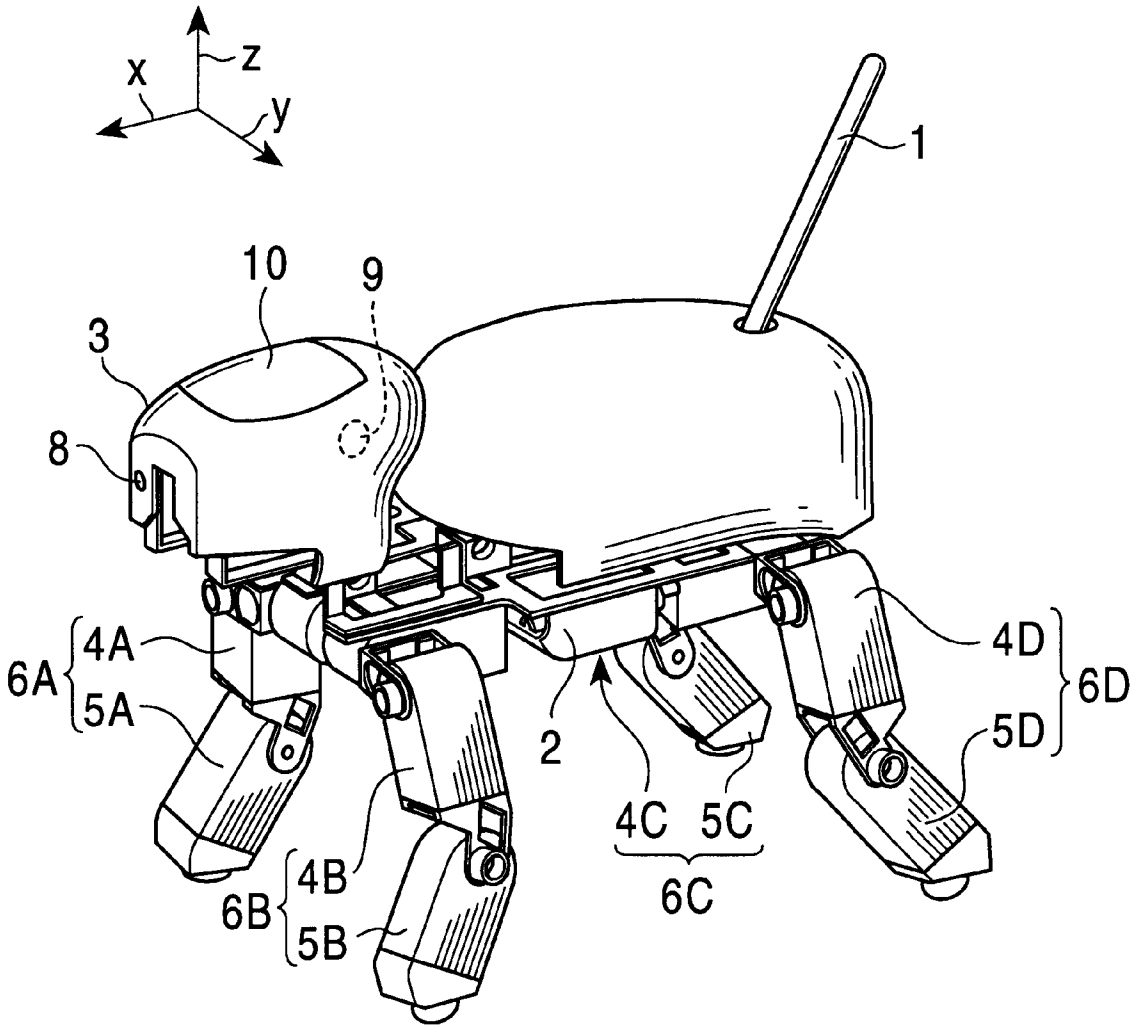

FIG. 2

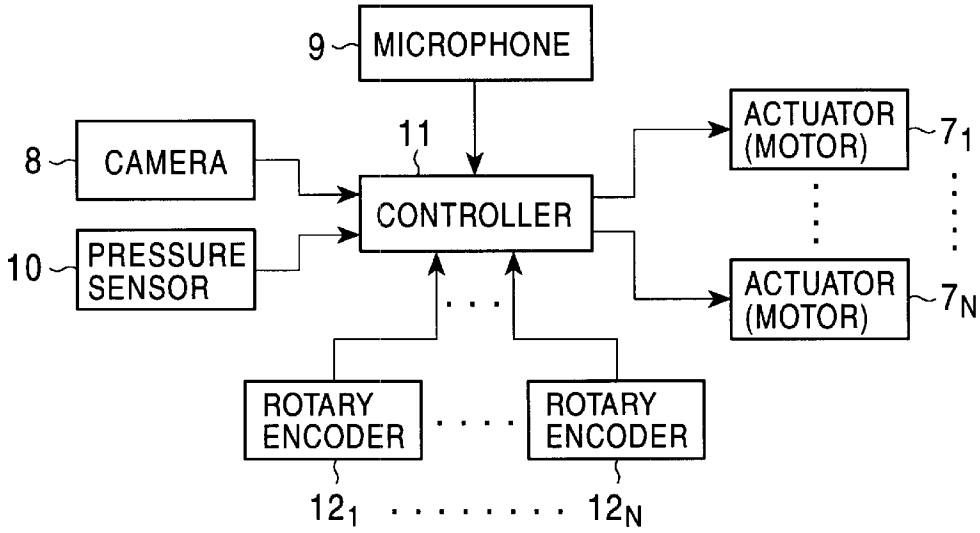
9
MICROPHONE
11
8
CAMERA
CONTROLLER
10
PRESSURE SENSOR
ACTUATOR (MOTOR)
7_1
ACTUATOR (MOTOR)
7_N
ROTARY ENCODER
ROTARY ENCODER
12_1
12_N

FIG. 3

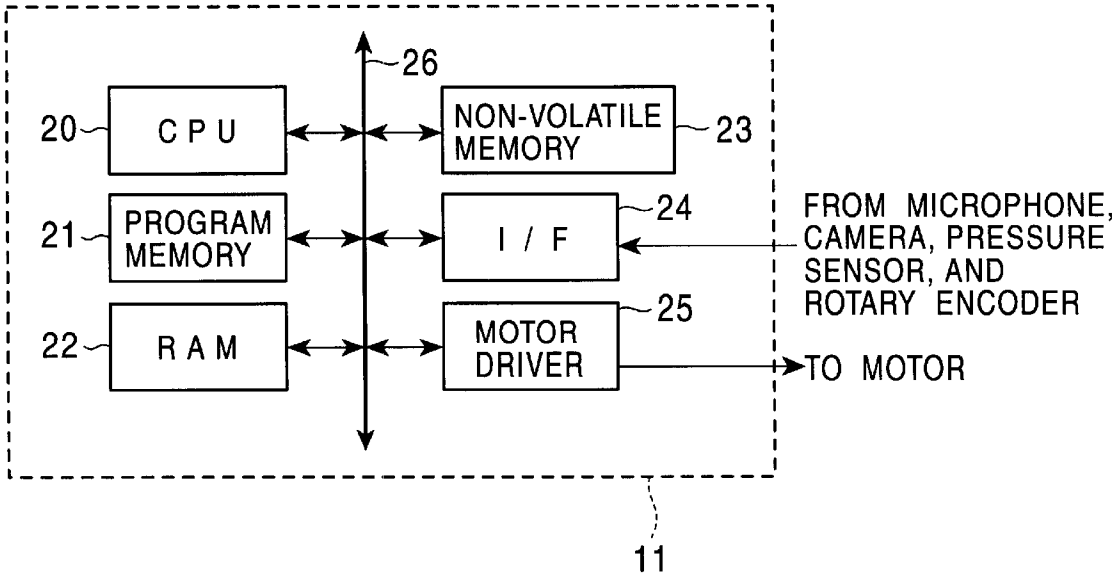
26
20
CPU
NON-VOLATILE MEMORY
23
21
PROGRAM MEMORY
I / F
24
FROM MICROPHONE, CAMERA, PRESSURE SENSOR, AND ROTARY ENCODER
22
RAM
MOTOR DRIVER
25
TO MOTOR
11

FIG. 4

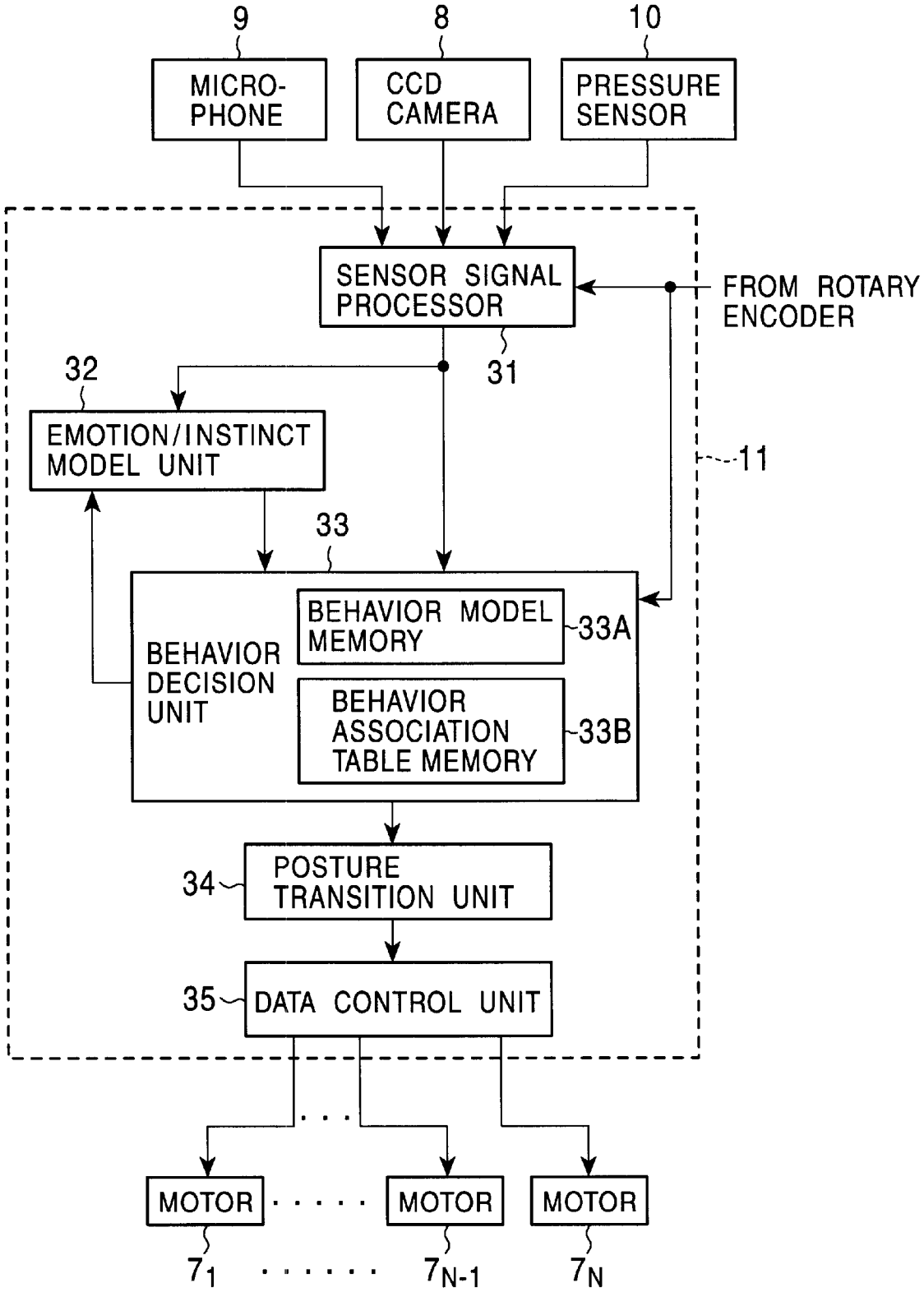
9
8
10
MICRO-PHONE
CCD CAMERA
PRESSURE SENSOR
SENSOR SIGNAL PROCESSOR
FROM ROTARY ENCODER
31
32
EMOTION/INSTINCT MODEL UNIT
11
33
BEHAVIOR MODEL MEMORY
33A
BEHAVIOR DECISION UNIT
BEHAVIOR ASSOCIATION TABLE MEMORY
33B
34
POSTURE TRANSITION UNIT
35
DATA CONTROL UNIT
MOTOR
MOTOR
MOTOR
7_1
7_{N-1}
7_N

FIG. 5

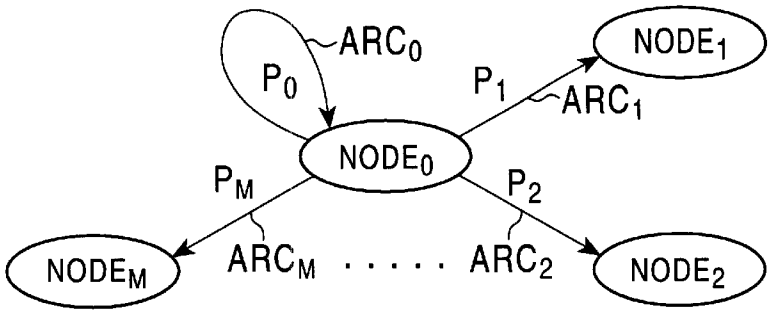

FIG. 6

BEHAVIOR / WORDS	WALKING FORWARD	LOOKING UP	BITING	.....	HAND-SHAKING	.....
HEY	10	0	20	.....	0	.....
COME HERE	60	0	0	.....	0	.....
SHAKE HANDS	0	20	0	.....	70	.....
⋮	⋮	⋮	⋮	⋮	⋮	⋮

FIG. 7

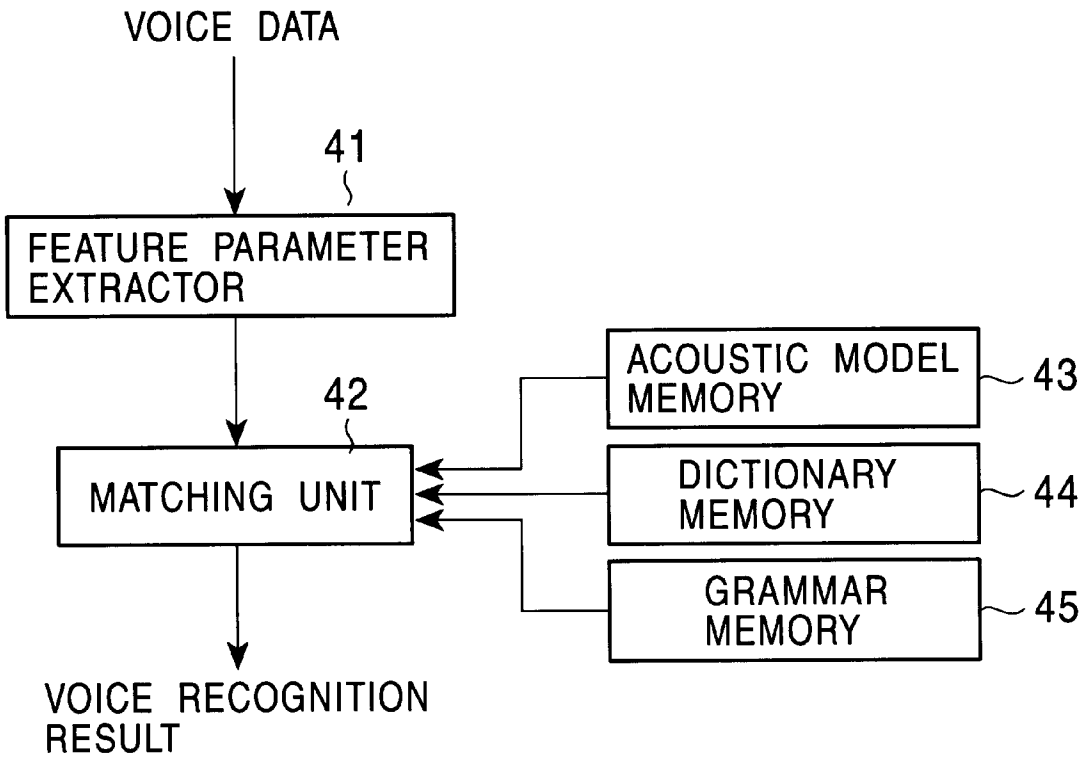
VOICE DATA
41
FEATURE PARAMETER EXTRACTOR
42
MATCHING UNIT
ACOUSTIC MODEL MEMORY
43
DICTIONARY MEMORY
44
GRAMMAR MEMORY
45
VOICE RECOGNITION RESULT

FIG. 8

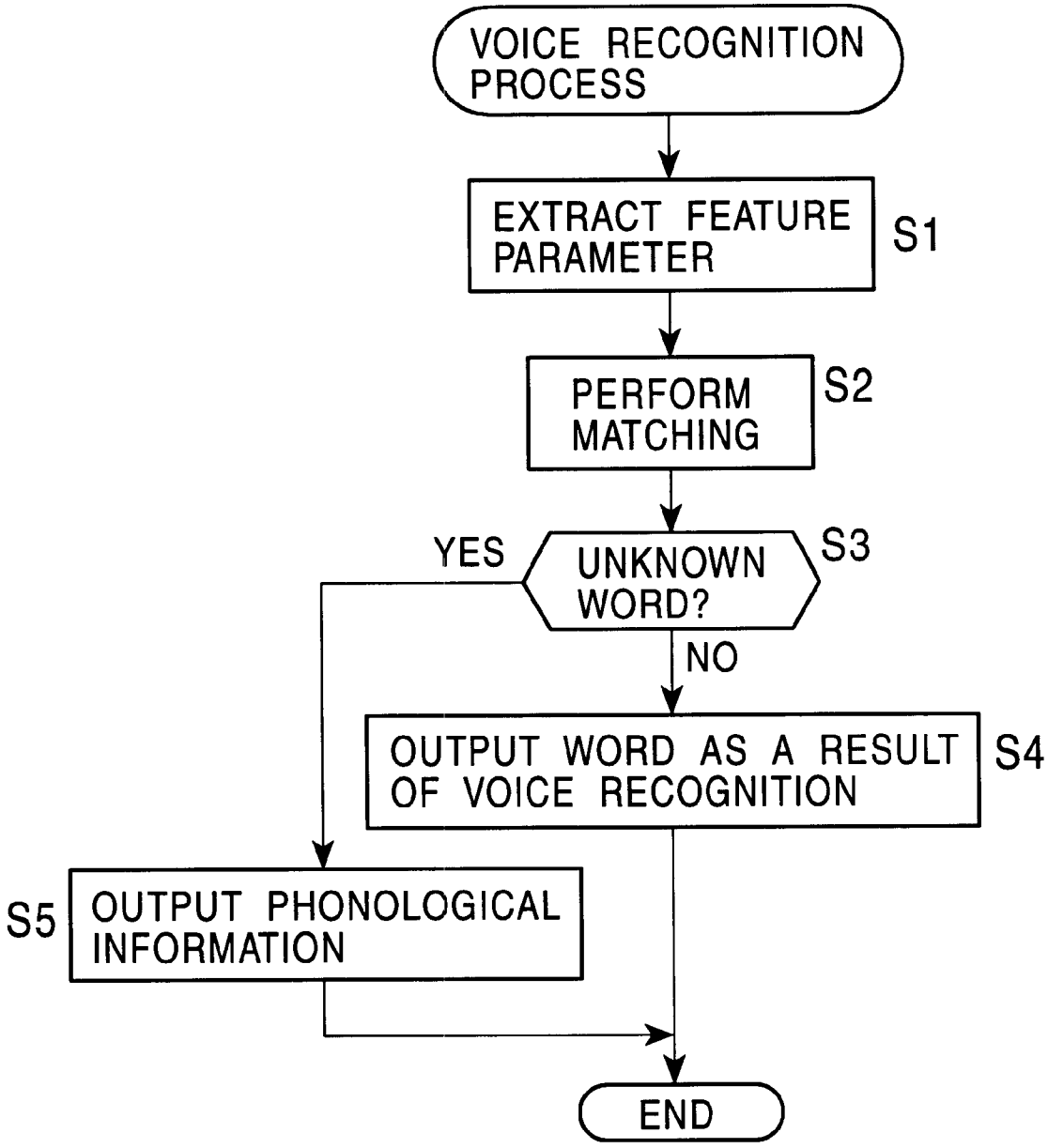
VOICE RECOGNITION PROCESS
EXTRACT FEATURE PARAMETER
S1
PERFORM MATCHING
S2
YES
UNKNOWN WORD?
S3
NO
OUTPUT WORD AS A RESULT OF VOICE RECOGNITION
S4
S5
OUTPUT PHONOLOGICAL INFORMATION
END

FIG. 9

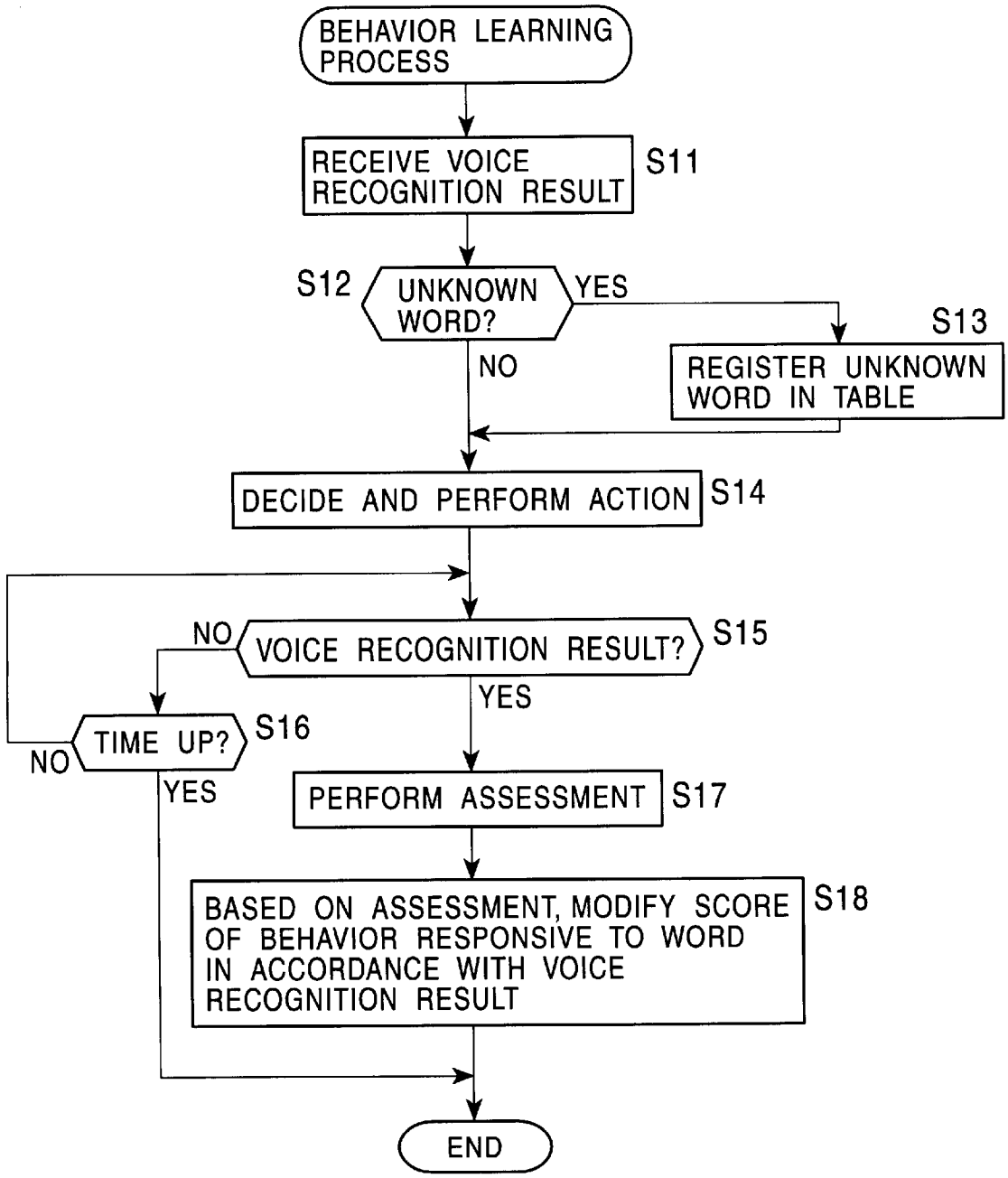
BEHAVIOR LEARNING PROCESS
RECEIVE VOICE RECOGNITION RESULT
S11
S12
UNKNOWN WORD?
YES
NO
S13
REGISTER UNKNOWN WORD IN TABLE
DECIDE AND PERFORM ACTION
S14
NO
VOICE RECOGNITION RESULT?
S15
YES
TIME UP?
S16
NO
YES
PERFORM ASSESSMENT
S17
BASED ON ASSESSMENT, MODIFY SCORE OF BEHAVIOR RESPONSIVE TO WORD IN ACCORDANCE WITH VOICE RECOGNITION RESULT
S18
END

FIG. 10

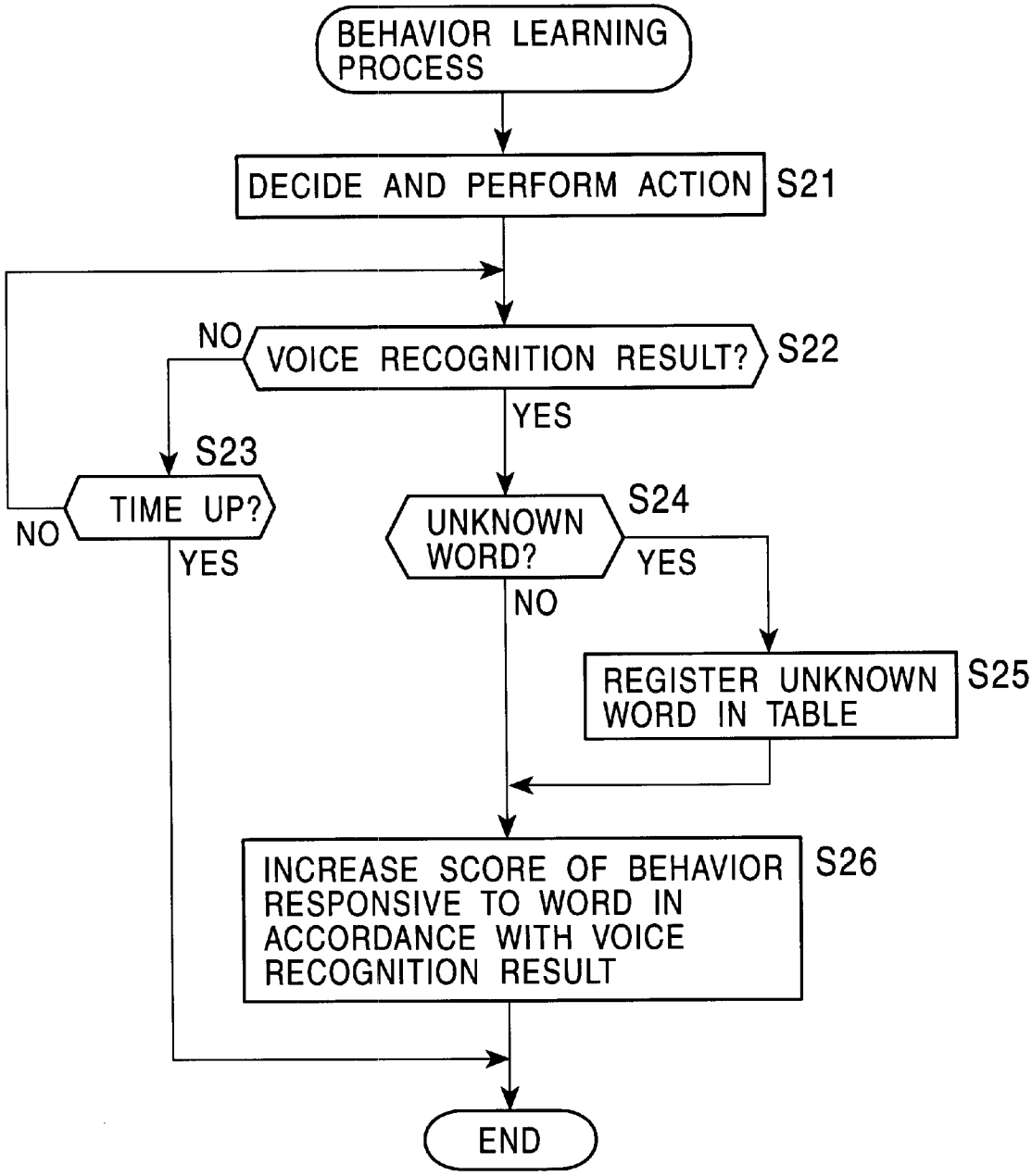
BEHAVIOR LEARNING PROCESS
DECIDE AND PERFORM ACTION
S21
VOICE RECOGNITION RESULT?
S22
NO
YES
S23
TIME UP?
NO
YES
UNKNOWN WORD?
S24
YES
NO
REGISTER UNKNOWN WORD IN TABLE
S25
INCREASE SCORE OF BEHAVIOR RESPONSIVE TO WORD IN ACCORDANCE WITH VOICE RECOGNITION RESULT
S26
END

FIG. 11

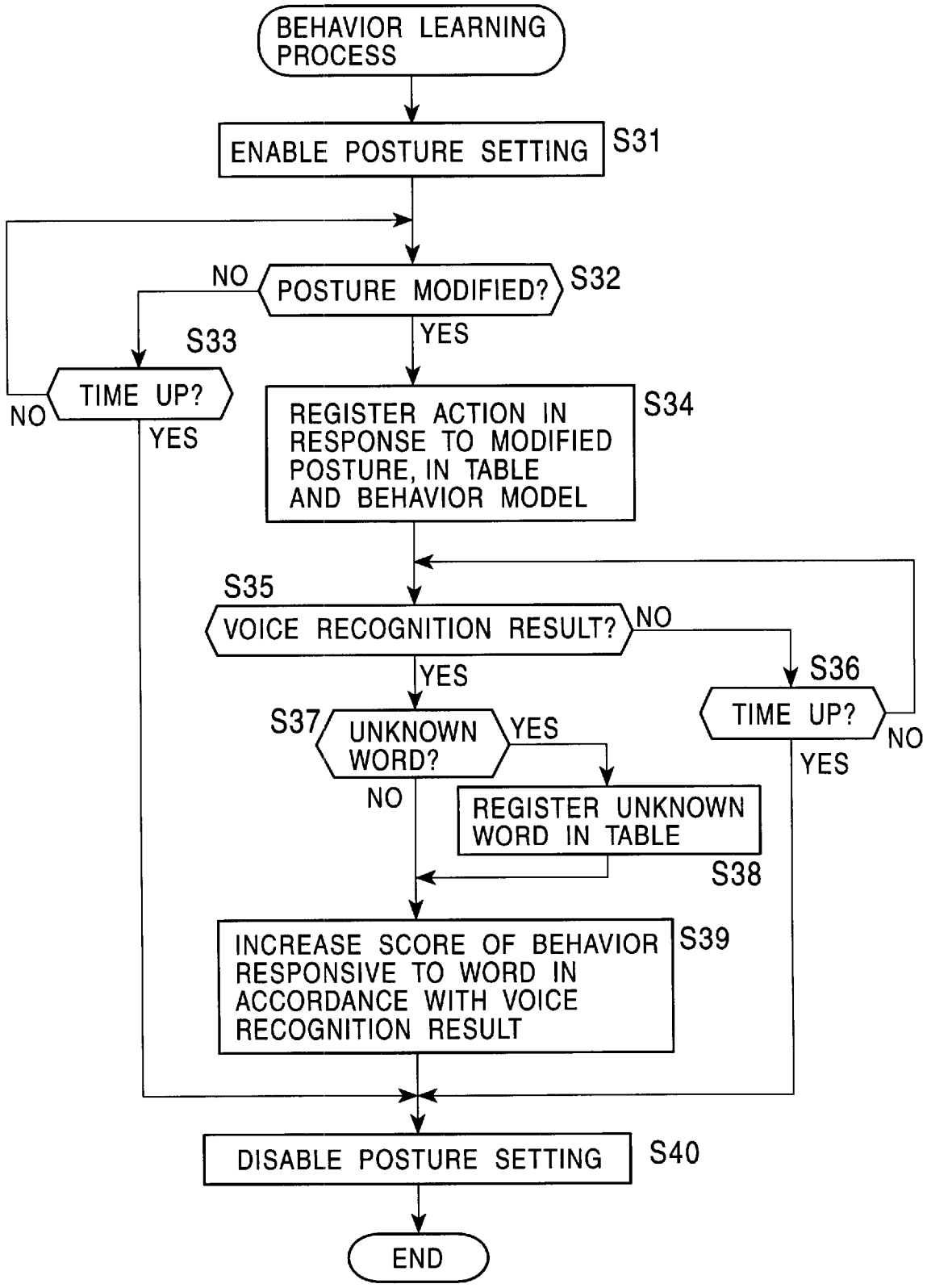
BEHAVIOR LEARNING PROCESS
ENABLE POSTURE SETTING
S31
POSTURE MODIFIED?
S32
NO
YES
S33
TIME UP?
NO
YES
REGISTER ACTION IN RESPONSE TO MODIFIED POSTURE, IN TABLE AND BEHAVIOR MODEL
S34
S35
VOICE RECOGNITION RESULT?
NO
YES
S36
TIME UP?
NO
YES
S37
UNKNOWN WORD?
YES
NO
REGISTER UNKNOWN WORD IN TABLE
S38
INCREASE SCORE OF BEHAVIOR RESPONSIVE TO WORD IN ACCORDANCE WITH VOICE RECOGNITION RESULT
S39
DISABLE POSTURE SETTING
S40
END

ROBOT CONTROL DEVICE, ROBOT CONTROL METHOD AND STORAGE MEDIUM

BACKGROUND OF THE INVENTION

1. Field of the Invention

The present invention relates to a robot control device, a robot control method, and a storage medium, and, more particularly, to a robot control device and a robot control method for controlling a robot with which an individual enjoys a training process like training an actual pet, such as a dog or cat, and to a storage medium for storing a software program for the robot control method.

2. Description of the Related Art

Commercially available are a number of (stuffed) toy robots which act in response to the pressing of a touch switch or a voice of an individual having an intensity above a predetermined level. In the context of the present invention, the toy robots include stuffed toy robots.

In such conventional robots, the relationship between the pressing of the touch switch or the input of the voice and the action (behavior) of the robot is fixed, and a user cannot modify the behavior of the robot to the user's preference. The robot merely repeats the same action for several times, and the user may grow tired of the toy. The user thus cannot enjoy a learning process of the robot in the same way as a dog or cat may learn tricks.

SUMMARY OF THE INVENTION

Accordingly, it is an object of the present invention to provide a robot which offers substantial entertainment value.

An aspect of the present invention relates to a robot control device for controlling the action of a robot, and includes a voice recognition unit for recognizing a voice, a control unit for controlling a drive unit that drives the robot for action, and a setting unit for setting an association between the voice recognition result provided by the voice recognition unit and the behavior of the robot.

The control unit may decide an action for the robot to take, and controls the drive unit to drive the robot to perform the decided action, wherein the setting unit sets an association between the decided action and the voice recognition result immediately subsequent to the decided action taken by the robot.

The robot control device preferably includes an assessment unit for assessing a voice recognition result obtained subsequent to the first voice recognition result provided by the voice recognition unit, wherein the control unit controls the drive unit to drive the robot to perform a predetermined action in response to the first voice recognition result, and wherein the setting unit sets an association between the predetermined action and the first voice recognition result in accordance with the assessment result of the next voice recognition result.

The setting unit preferably registers an association between the voice recognition result and the action of the robot in an association table that associates a word, which the voice recognition unit receives for voice recognition, with the action of the robot.

When the voice recognition result provided by the voice recognition unit indicates that the word is an unknown one, the setting unit preferably registers the unknown word in the association table, and preferably registers an association between the registered unknown word and the action of the robot.

Preferably, the robot control device further includes a posture detector for detecting a posture of the robot, wherein the setting unit sets an association between the voice recognition result of the voice recognition unit and an action which the robot needs to take to reach the posture detected by the posture detector.

Preferably, the control unit controls the drive unit in accordance with the association set between the action of the robot and the voice recognition result of the voice recognition unit.

Another aspect of the present invention relates to a robot control method for controlling the action of a robot, and includes a voice recognition step of recognizing a voice, a control step of controlling a drive unit that drives the robot for action, and a setting step of setting an association between the voice recognition result provided in the voice recognition step and the action of the robot.

Yet another aspect of the present invention relates to a storage medium for storing a computer-executable code for controlling the action of a robot, and the computer-executable code performs a voice recognition step of recognizing a voice, a control step of controlling drive unit that drives the robot for action, and a setting step of setting an association between the voice recognition result provided in the voice recognition step and the action of the robot.

In accordance with the present invention, the drive unit is control to drive the robot for action while the voice is being recognized, and an association is set between the voice recognition result and the behavior of the robot.

BRIEF DESCRIPTION OF THE DRAWINGS

FIG. **1** is an external perspective view showing one embodiment of the robot of the present invention;

FIG. **2** is a block diagram showing the internal construction of the robot;

FIG. **3** is a block diagram showing the hardware construction of a controller;

FIG. **4** is a functional block diagram that is performed when the controller executes programs;

FIG. **5** shows a stochastic automaton as a behavioral model;

FIG. **6** shows a behavior association table;

FIG. **7** is a block diagram showing the construction of a voice recognition module that performs voice recognition in a sensor input processor;

FIG. **8** is a flow diagram illustrating the operation of the voice recognition module;

FIG. **9** is a flow diagram illustrating a first embodiment of the behavior learning process of a behavior decision unit;

FIG. **10** is a flow diagram illustrating a second embodiment of the behavior learning process of the behavior decision unit; and

FIG. **11** is a flow diagram illustrating a third embodiment of the behavior learning process of the behavior decision unit.

DESCRIPTION OF THE PREFERRED EMBODIMENTS

FIG. **1** is an external perspective view showing one embodiment of a robot of the present invention, and FIG. **2** shows an electrical construction of the robot.

In this embodiment, the robot models a dog. A head unit **3** is connected to a torso unit **2** at the forward end thereof,

and foot units **6**A and **6**B are respectively composed of thighs **4**A–**4**D and heels **5**A–**5**D, and are respectively connected to the torso unit **2** on the side walls at the front and the back thereof. A tail **1** is connected to the back end of the torso unit **2**.

Motors 7_1, 7_2, . . . 7_N as actuators are respectively arranged at the joints between the tail **1** and the torso unit **2**, between the head unit **3** and the torso unit **2**, between each of the thighs **4**A–**4**D and the torso unit **2**, and between the thighs **4**A–**4**D and the respective heels **5**A–**5**D. With the motors 7_1, 7_2, . . . 7_N turning, the tail **1** and the head unit **3** are rotated about each of the three axes, i.e., the x, y, and z axes, the thighs **4**A–**4**D are rotated about each of the two axes, i.e., the x and y axes, the heels **5**A–**5**D are rotated about the single axis, i.e., the x axis. In this way, the robot takes a variety of actions.

The head unit **3** contains a CCD (Charge-Coupled Device) camera **8**, a microphone **9**, and a pressure sensor **10** at the predetermined positions thereof. The torso unit **2** houses a controller **11**. The CCD camera **8** picks up a picture of the surroundings of the robot, including the user. The microphone **9** picks up ambient sounds including the voice of the user. The pressure sensor **10** detects pressure applied the head unit **3** by the user or other objects. The controller **11** thus receives the image of the surroundings taken by the CCD camera **8**, the ambient sound picked up by the microphone **9**, pressure applied on the head unit **3** by the user, as image data, sound data, and pressure data, respectively.

Rotary encoders 12_1, 12_2, . . . 12_N are respectively arranged for the motors 7_1, 7_2, . . . 7_N at the respective articulation points. The rotary encoders 12_1, 12_2, . . . 12_N respectively detect the angles of rotation of the rotary shafts of the respective motors 7_1, 7_2, . . . 7_N. The angles of rotation detected by the rotary encoders 12_1, 12_2, . . . , 12_N are fed to the controller **11** as detected angle data.

The controller **11** determines the posture thereof and the situation surrounding the robot based on the image data from the CCD camera **8**, the sound data from the microphone **9**, the pressure data from the pressure sensor **10**, and the angle data from the rotary encoders 12_1, 12_2, . . . 12_N. The controller **11** decides a subsequent action to take next in accordance with a preinstalled control program. Based on the decision, any of the motors 7_1, 7_2, . . . 7_N is driven as required.

The robot thus acts in a self-controlled fashion by moving the tail **1**, the torso unit **2**, and the foot units **6**A–**6**D to a desired state.

FIG. **3** shows the construction of the controller **11** of FIG. **2**.

The controller **11** includes a CPU (Central Processing Unit) **20**, program memory **21**, RAM (Random Access Memory) **22**, non-volatile memory **23**, interface circuit (I/F) **24**, and motor driver **25**. All of these components are interconnected via a bus **26**.

The CPU **20** controls the behavior of the robot by executing a control program stored in the program memory **21**. The program memory **21** is an EEPROM (Electrically Erasable Programmable Read Only Memory), and stores the control program executed by the CPU **20** and required data. The RAM **22** temporarily stores data needed by the CPU **20** in operation. The non-volatile memory **23**, as will be discussed later, stores an emotion/instinct model, a behavioral model, a behavior association table, etc, which must be retained throughout power interruptions. The interface circuit **24** receives data supplied by the CCD camera **8**, the microphone **9**, the pressure sensor **10**, and the rotary encoders 12_1 through 12_N, and sends the data to the CPU **20**. Under the control of the CPU **20**, the motor driver **25** feeds, to the motors 7_1 through 7_N, drive signals to drive these motors.

The CPU **20** in the controller **11** controls the robot in accordance with a functional block diagram shown in FIG. **4**, by executing the control program stored in the program memory **21**.

FIG. **4** thus illustrates the function of the controller **11**.

A sensor signal processor **31** recognizes external stimulation acting on the robot or the surroundings of the robot, and feeds these data of the external stimulation and the surroundings to an emotion/instinct model unit **32** and a behavior decision unit **33**.

The emotion/instinct model unit **32** manages an emotion model and an instinct model respectively expressing the state of the emotion and the instinct of the robot. In response to the output from the sensor signal processor **31**, and the output of the behavior decision unit **33**, the emotion/instinct model unit **32** modifies parameters defining the emotion model and the instinct model, thereby updating the state of the emotion and the instinct of the robot.

The behavior decision unit **33** contains a behavior model memory **33**A and a behavior association table memory **33**B, and decides a next behavior to be taken by the robot based on the content of the memory, the output of the sensor signal processor **31**, and the emotion model and the instinct model managed by the emotion/instinct model unit **32**. The behavior decision unit **33** then feeds the information of the behavior (hereinafter referred to as behavior information) to a posture transition unit **34**.

In order to cause the robot to behave in accordance with the behavior information supplied by the behavior decision unit **33**, the posture transition unit **34** calculates control data, such as angles of rotation and rotational speeds of the motors 7_1 through 7_N and outputs the control data to a data control unit **35**.

The data control unit **35** drives the motors 7_1 through 7_N in response to the control data coming from the posture transition unit **34**.

The sensor signal processor **31** in the controller **11** thus constructed recognizes a particular external state, a particular action taken by the user, and an instruction given by the user based on the image data supplied by the camera **8**, the voice data provided by the microphone **9**, and the pressure data output by the pressure sensor **10**. The recognition result is then output to the emotion/instinct model unit **32** and the behavior decision unit **33**.

The sensor signal processor **31** performs image recognition based on the image data provided by the camera **8**. For example, the sensor signal processor **31** recognizes that there is a pole or a wall, and then feeds the recognition result to the emotion/instinct model unit **32** and the behavior decision unit **33**. The sensor signal processor **31** performs voice recognition by processing the voice data from the pressure sensor **10**. For example, when the pressure sensor **10** detects a pressure of short duration of time at a level higher than a predetermined threshold, the sensor signal processor **31** recognizes that the robot is being "beaten or chastised". When the pressure sensor detects a pressure of long duration of time at a level lower than a predetermined threshold, the sensor signal processor **31** recognizes as being "stroked or praised". The sensor signal processor **31** then feeds the recognition result to the emotion/instinct model unit **32** and the behavior decision unit **33**.

The emotion/instinct model unit **32** manages the emotion m model expressing emotional states, such as such as "joy",

"sadness", "anger", etc., and the instinct model expressing "appetite", "sleepiness", "exercise", etc.

The emotion model and the instinct model express the states of the emotion and instinct of the robot by integer numbers ranging from zero to 100, for example. The emotion/instinct model unit **32** updates the values of the emotion model and instinct model in response to the output of the sensor signal processor **31**, and the output of the behavior decision unit **33** with a time elapse taken into considered. The emotion/instinct model unit **32** feeds the values of the updated emotion model and instinct model (the states of the emotion and the instinct of the robot) to the behavior decision unit **33**.

The states of the emotion and instinct of the robot change in response to the output of the behavior decision unit **33** as discussed below, for example.

The behavior decision unit **33** supplies the emotion/instinct model unit **32** with the behavior information of the behavior the robot took in the past or is currently taking (for example, "the robot looked away or is looking away").

Now, when the robot already in anger is stimulated by the user, the robot may take an action of "looking away" in response. In this case, the behavior decision unit **33** supplies the emotion/instinct model unit **32** with the behavior information of "looking away".

Generally speaking, an action of expressing discontent in anger, such as the action of looking away, may somewhat calm down anger. The emotion/instinct model unit **32** then decreases the value of the emotion model representing "anger" (down to a smaller degree of anger) when the behavior information of "looking away" is received from the behavior decision unit **33**.

The behavior decision unit **33** decides a next action to take based on the recognition result of the sensor signal processor **31**, the output of the emotion/instinct model unit **32**, elapsed time, the memory content of the behavior model memory **33**A, and the memory content of the behavior association table memory **33**B. The behavior decision unit **33** then feeds the behavior information, representing the action, to the emotion/instinct model unit **32** and the posture transition unit **34**.

The behavior model memory **33**A stores a behavioral model that defines the behavior of the robot. The behavior association table memory **33**B stores an association table that associates the voice recognition result of the voice input to the microphone **9** with the behavior of the robot.

The behavioral model is formed of a stochastic automaton shown in FIG. **5**. In the stochastic automaton shown here, a behavior is expressed by any node (state) among $NODE_0$ through $NODE_M$, and a transition of behavior is expressed by an arc ARC_{ml} representing a transition from a node $NODE_{m0}$ to another node $NODE_{ml}$ (note that there is a case when another node is the original node) (m**0**, ml=0, 1, . . . , M).

The arc ARC_{ml}, representing the transition from the node $NODE_{m0}$ to the node $NODE_{ml}$, has a transition probability P_{ml}, and the probability of node transition, namely, the transition of behavior is determined, in principle, based on the corresponding transition probability.

Referring to FIG. **5**, for simplicity, the stochastic automaton having (M+1) nodes includes arcs ARC_0 through ARC_M respectively extending from node $NODE_0$ the other nodes $NODE_0$ through $NODE_M$.

As shown in FIG. **6**, the behavior association table registers the association between each word obtained as a result of voice recognition and an action to be taken by the robot. The table shown in FIG. **6** lists, as a correlation score of an integer number, the association between a voice recognition result and a behavior. Specifically, the integer number representing the degree of association between the voice recognition result and the behavior is the correlation score. When a voice recognition result is obtained, the robot changes the probability or the degree of frequency of a behavior depending on the correlation score.

When the voice recognition result is "Hey" in the behavior association table in FIG. **6**, the degrees of frequency of actions of "walking forward" and "biting" (each having no zero correlation scores) taken by the robot are respectively increased by correlation scores of 10 and 20. When the voice recognition result is "come over here", the degree of frequency of the action of "walking forward" (having no zero correlation score) taken by the robot is increased by a correlation score of 60. When the voice recognition result is "Shake hands", the degree of frequency of the action of "looking up" (having no zero correlation score) taken by the robot is increased by a correlation score of 20, and at the same time, the degree of frequency of the action of "shaking hands" is increased by a correlation score of 70.

The behavior decision unit **33**, in principle, determines which node to transition to from a node corresponding to a current behavior in the stochastic automaton as a behavioral model (see FIG. **5**), based on the values of the emotion model and instinct model of the emotion/instinct model unit **32**, elapsed time, the recognition result of the sensor signals provided by the sensor signal processor **31**, besides the transition probability set for the arc extending from the current node. The behavior decision unit **33** then supplies the emotion/instinct model unit **32** and posture transition unit **34** with the behavior information representing the behavior corresponding to the node subsequent to the node transition (also referred to as a post-node-transition action).

Depending on the values of the emotion model and instinct model, the behavior decision unit **33** transitions to a different node even if the sensor signal processor **31** outputs the same external recognition results.

Specifically, now, the output of the sensor signal processor **31** indicates that the palm of a hand is stretched out in front of the robot. When the emotion model of "anger" indicates that the robot is "not angry" and when the instinct model of "appetite" indicates that the robot is not hungry, the behavior decision unit **33** decides to drive the robot to shake hands as a post-node-transition action, in response to the stretched palm.

Similarly, the output of the sensor signal processor **31** now indicates that the palm of the hand is stretched out in front of the robot. Although the emotion model of "anger" indicates that the robot is "not angry" but the instinct model of "appetite" indicates that the robot is hungry, the behavior decision unit **33** decides to lick at the palm of the hand as a post-node-transition action.

Again, the output of the sensor signal processor **31** now indicates that the palm of the hand is stretched out in front of the robot. When the emotion model of "anger" indicates that the robot is "angry", the behavior decision unit **33** decides to drive the robot to abruptly look away, as a post-node-transition action, regardless of the value of the instinct model of "appetite".

When the recognition result of the sensor output provided by the sensor signal processor **31** determines that the voice is a user's own voice, the behavior decision unit **33** determines which node to transition to from the node for the

current behavior, based on the correlation scores of the behaviors indicated by the voice recognition result, registered in the behavior association table (see FIG. **6**) in the behavior association table memory **33**B. The behavior decision unit **33** then supplies the emotion/instinct model unit **32** and the posture transition unit **34** with the behavior information indicating the behavior (post-node-transition action) corresponding to the decided node. In this way, the robot behaves differently dependent on the correlation scores of the behaviors in accordance with the voice recognition result.

Upon receiving a predetermined trigger, the behavior decision unit **33** transitions to a node in the behavior model, thereby deciding a post-node-transition action to take. Specifically, the behavior decision unit **33** decides a post-node-transition action to take, when a predetermined time has elapsed since the robot started the current action, when the sensor signal processor **31** outputs a particular recognition result such as a voice recognition result, or when the value of each of the emotion model or the instinct model of the emotion/instinct model unit **32** rises above a predetermined threshold.

Based on the behavior information provided by the behavior decision unit **33**, the posture transition unit **34** generates posture transition information for transitioning from a current posture to a next posture, and outputs the posture transition information to the data control unit **35**. Specifically, the posture transition unit **34** recognizes the current posture based on the outputs from the rotary encoders $\mathbf{12}_1$ through $\mathbf{12}_N$, and calculates the angles of rotation and rotational speeds of the motors $\mathbf{7}_1$ through $\mathbf{7}_N$ for the robot to take an action (a post-node-transition action) corresponding the behavior information from the behavior decision unit **33**, and then outputs as the posture transition information to the data control unit **35**.

The data control unit **35** generates drive signals for driving the motors $\mathbf{7}_1$ through $\mathbf{7}_N$ in accordance with the posture transition information from the posture transition unit **34**, and supplies the motors $\mathbf{7}_1$ through $\mathbf{7}_N$ with the drive signals. The robot thus takes a post-node-transition action accordingly.

FIG. **7** is a functional block diagram of a portion of the sensor signal processor **31** shown in FIG. **4**, which is hereinafter referred to as a voice recognition module and performs voice recognition in response to voice data from the microphone **9**.

The voice recognition module recognizes a voice input to the microphone **9** using a continuous HMM (Hidden Markov Model), and outputs voice recognition results.

A feature parameter extractor **41** receives the voice data from the microphone **9**. The feature parameter extractor **41** performs MFCC (Mel Frequency Cepstrum Coefficient) analysis on the voice data input thereto on a frame by frame basis. The MFCC analysis result is output to a matching unit **42** as a feature parameter (feature vector). As feature parameters, the feature parameter extractor **41** may further extract a linear prediction coefficient, a cepstrum coefficient, a line spectrum pair, and power in every predetermined frequency band (output of a filter bank).

Using the feature parameters from the feature parameter extractor **41**, the matching unit **42** recognizes the voice input to the microphone **9** based on the continuous HMM model while referencing an acoustic model memory **43**, a dictionary memory **44**, and a grammar memory **45** as necessary.

The acoustic model memory **43** stores an acoustic model that represents an acoustic feature such as phonemes and syllables in a voice to be recognized. Since voice recognition is here carried out using the continuous HMM, an HMM is employed. The dictionary memory **44** stores a dictionary of words which contains information of the pronunciation (phonological information) of each word to be recognized. The grammar memory **45** stores a grammar which describes how each word registered in the data control unit **35** is chained. The grammar may be a context-free grammar, or a rule based on word chain probability (N-gram).

The matching unit **42** produces an acoustic model of a word (a word model) by connecting acoustic models stored in the dictionary memory **44** through referencing the dictionary in the dictionary memory **44**. The matching unit **42** further connects several word models by referencing the grammar stored in the grammar memory **45**, and processes the connected word models through the continuous HMM method based on the feature parameters, thereby recognizing the voice input to the microphone **9**. Specifically, the matching unit **42** detects a word model having the highest score (likelihood) from the time-series feature parameters output by the feature parameter extractor **41**, and outputs a word (a word chain) corresponding to the word model. The voice recognition result of the matching unit **42** is thus output to the emotion/instinct model unit **32** and the behavior decision unit **33** as the output of the sensor signal processor **31**.

The operation of the voice recognition module shown in FIG. **7** is now discussed, with reference to a flow diagram shown in FIG. **8**.

The voice is now input to the microphone **9**. The digital voice data responsive to the voice is fed to the sensor signal processor **31**, the microphone **9**. The voice data is then fed to the feature parameter extractor **41**.

The feature parameter extractor **41** subjects the voice data to acoustic analysis, thereby extracting a time-series feature parameter in step S**1**. The feature parameter is then fed to the matching unit **42**. In step S**2**, the matching unit **42** subjects the voice input to the microphone **9** to voice recognition through the continuous HMM method, using the feature parameter from the feature parameter extractor **41**.

In step S**3**, the matching unit **42** determines whether the voice recognition result indicates an unknown word (an unknown word chain), namely, a word not registered in the dictionary of the dictionary memory **44**. When it is determined in step S**3** that the voice recognition result is a known word, in other words, when it is determined that the voice recognition result is a word registered in the dictionary, the process proceeds to step S**4**. The voice recognition result is then output to the emotion/instinct model unit **32** and the posture transition unit **34**. The process then ends.

When it is determined in step S**3** that the voice recognition result indicates an unknown word, the process proceeds to step S**5**. The matching unit **42** outputs a string of phonemes corresponding to the voice recognition result to the emotion/instinct model unit **32** and the behavior decision unit **33**. The process then ends.

When the voice recognition result is an unknown word in this embodiment, the emotion/instinct model unit **32** simply ignores the voice recognition result. This is because the emotion/instinct model unit **32** is unable to understand the content of the voice recognition result when the voice recognition result is an unknown word.

When the voice recognition result is an unknown word, the string of the phonemes of the unknown word is registered in the dictionary of the dictionary memory **44**. In this way, the unknown word, now a known word, is next subjected to voice recognition as a word registered in the dictionary.

The matching unit **42**, in principle, outputs a word having the highest score as a result of the voice recognition as already discussed. When the highest score is lower than a predetermined threshold, the voice input to the microphone **9** is treated as an unknown word, and the string of phonemes corresponding to the sequence of phonological models having the highest score is output as a result of the voice recognition.

As already discussed, the behavior decision unit **33** decides a post-node-transition action taking into consideration the voice recognition result in a normal mode when the behavior decision unit **33** receives the voice recognition result from the matching unit **42**. However, in a learning mode, the behavior decision unit **33** performs a behavior learning process. Specifically, the behavior decision unit **33** sets an association between the voice recognition result from the matching unit **42** and the behavior of the robot, and registers the association in the behavior association table (see FIG. **6**) of the behavior association table memory **33**B.

When the behavior decision unit **33** receives, from the sensor signal processor **31**, a particular word (such as "learn") as a result of voice recognition or the pressure data indicating a pressure having a level higher than a predetermined value and having a duration of time longer than a predetermined time, the behavior decision unit **33** switches the operation mode from the normal mode to the learning mode for the learning mode process.

FIG. **9** is a flow diagram illustrating a behavior learning process.

In the behavior learning process, the behavior decision unit **33** awaits the supply of a voice recognition result from the voice recognition module (shown in FIG. **7**). When the behavior decision unit **33** receives the voice recognition result in step **S11**, the process proceeds to step **S12**. The behavior decision unit **33** determines whether the voice recognition result from the voice recognition module is an unknown word.

When it is determined in step **S12** that the voice recognition result indicates an unknown word, the process proceeds to step **S13**. The behavior decision unit **33** adds, for registration, an entry (a row) for the unknown word in the behavior association table (see FIG. **6**) of the behavior association table memory **33**B (for example, adds a row for the unknown word as the lowest row in the behavior association table of FIG. **6**). The process proceeds to step **S14**.

It is assumed that the behavior association table has the entries for all words registered in the dictionary of the dictionary memory **44** of the voice recognition module (see FIG. **7**). When the voice recognition result is found to be an unknown word, the behavior association table has no entry for the voice recognition result. In step **S13**, then the entry of the unknown word as the voice recognition result is registered.

When it is determined in step **S12** that the voice recognition result is a known word, in other words, when it is determined that the voice recognition result is any of the words registered in the behavior association table, the process proceeds to step **S14**, skipping step **S13**. The behavior decision unit **33** decides an action in a random fashion, and causes the robot to perform the post-node-transition action.

In step **S15**, the behavior decision unit **33** determines whether a new voice recognition result has been received from the voice recognition module. When it is determined in step **S15** that no new voice recognition result has been received, the process proceeds to step **S16**. The behavior decision unit **33** determines whether a predetermined time has elapsed since the post-node-transition action was taken in step **S14**, in other words, whether time is up. When it is determined in step **S16** that time is up, in other words, when the user has said no particular word since the robot took the action, the behavior learning process then ends.

Upon ending the behavior learning process, the behavior decision unit **33** switches the operation mode from the learning mode to the normal mode.

When it is determined in step **S16** that the predetermined duration of time has not elapsed yet, the process returns to step **S15**. The voice recognition result is received. Otherwise, the process cycles through step **S15** and step **S16** until time is up.

When it is determined in step **S15** that the new voice recognition result has been received, the process proceeds to step **S17** to assess the new voice recognition result. Specifically, in step **S17**, the behavior decision unit **33** regards the new voice recognition result as a reaction of the user in response to the post-node-transition action taken in step **S14**, and thereby assesses the new voice recognition result to determine whether the voice recognition result encourages or discourages the post-node-transition action taken in step **S14**.

Based on the assessment result in step **S17**, in step **S18**, the behavior decision unit **33** updates (increases or decreases), in the association table, the correlation score of the word corresponding to the voice recognition result received in step **S11** (hereinafter referred to as a first voice recognition result). The behavior learning process then ends.

In the behavior learning process illustrated in FIG. **9**, for example, the user says "Shake hands" immediately subsequent to the switching to the learning mode, the (first) voice recognition result is fed to the behavior decision unit **33**, and the action of "shaking hands" is performed as the post-node-transition action. The user encourages (praises) the action taken, for example, by speaking "Good", the (new) voice recognition result is fed to the behavior decision unit **33**. The behavior decision unit **33** assesses the voice recognition result by regarding the action taken as being encouraged, and increases the correlation score of the action of "shaking hands" in response to the first voice recognition result of "Shake hands" by a predetermined value. When the user speaks "Shake hands" in the normal mode, the frequency of occurrence (probability) of the action of "shaking hands" is heightened.

Now, the post-node-transition action of "walking forward" is carried out in response to the word "Shake hands" obtained as the first voice recognition result. The user discourages the post-mode-transition action, for example, by speaking "No", and the voice recognition result in response is fed to the behavior decision unit **33**. The behavior decision unit **33** assesses the voice recognition by regarding the action as being discouraged, and decreases the correlation score of the action of "walking forward" in response to the first voice recognition result of "Shake hands" by a predetermined value. When the user speaks "Shake hands" in the normal mode, the frequency of occurrence (probability) of the action of "walking forward" is therefore decreased.

The robot learns the action encouraged (praised) by the user when the user speaks, and is more likely to take the action later. In this way, the user enjoys the same training process as the one for teaching an actual pet tricks.

When the first voice recognition result is an unknown word in this embodiment, the unknown word is additionally registered in the behavior association table, and the corre-

lation score of the action in response to the additionally registered unknown word is updated by the next voice said by the user. In this embodiment, a new word may be associated with any action. Once the new word is associated with the action thereof, the robot takes the predetermined behavior when the new word is spoken.

The post-node-transition action is decided in a random fashion in step **S14** in the above discussion. However, as in the normal mode, the post-node-transition action may be decided based on the behavioral model taking into consideration the values of the emotion model and instinct model of the emotion/instinct model unit **32**.

When the word as the voice recognition result received in step **S11** is registered in the behavior association table, the post-node-transition action may be decided based on the correlation scores of the actions in the entries of the words. For example, the action having the highest correlation score against the word as the voice recognition result received in step **S11** may be adopted as a post-node-transition action. In this case, the robot is prevented from taking an action unrelated to the voice said by the user immediately subsequent to the switching to the learning mode.

In the behavior learning process shown in FIG. **9**, the robot takes any action after the user speaks a word. The user speaks a word again, and the second voice is assessed. Based on the assessment of the second voice, the correlation score of the action taken in response to the first voice is updated. The behavior learning process may be performed in a different fashion. For example, the robot takes an action, followed by a word spoken by the user in response to the action for association. The correlation score between the word and the action is accordingly updated.

Such a behavior learning process is now discussed, referring to a flow diagram shown in FIG. **10**.

The behavior decision unit **33** decides the post-node-transition action in step **S21** in the same way as step **S14** shown in FIG. **9**. The robot takes the post-node-transition action. The process then proceeds to step **S22**.

In step **S22**, the behavior decision unit **33** determines whether a voice recognition result has been received from the voice recognition module. When it is determined in step **S22** that no voice recognition result has been received, the process continues at step **S23**. The behavior decision unit **33** determines whether a predetermined duration of time has elapsed since the post-node-transition action taken in step **S21**, in other words, whether time is up. When it is determined in step **S23** that time is up, in other words, when the user has said no particular word since the robot took the post-node-transition action, the behavior learning process then ends.

When it is determined in step **S23** that the predetermined duration of time has not elapsed yet, the process returns to step **S22**. The voice recognition result is received. Otherwise, the process cycles through step **S22** and step **S23** until time is up.

When it is determined in step **S22** that a voice recognition result has been received, the process proceeds to step **S24**, and the behavior decision unit **33** determines whether the voice recognition result is an unknown word.

When it is determined in step **S24** that the voice recognition result indicates an unknown word, the process proceeds to step **S25**. In the same way as in step **S13** in FIG. **9**, the behavior decision unit **33** adds, for registration, an entry for the unknown word in the behavior association table (see FIG. **6**) of the behavior association table memory **33**B. The process proceeds to step **S26**.

When it is determined in step **S24** that the voice recognition result is a known word, in other words, when it is determined that the voice recognition result is any of the words registered in the behavior association table, the process proceeds to step **S26**, skipping step **S25**. The behavior decision unit **33** increases, in the association table, the correlation score of the word corresponding to the voice recognition result received from the voice recognition module, in response to the post-node-transition action taken in step **S21**, by a predetermined value. The behavior learning process then ends.

In the behavior learning process illustrated in FIG. **10**, the behavior decision unit **33** decides the action of "shaking hands" as the post-node-transition action, immediately. subsequent to the switching to the learning mode, and the post-node-transition action of "shaking hands" is actually performed. The user then says "Shake hands", for example, which is desired to be associated with the action of "shaking hands", and the behavior decision unit **33** increases the correlation score of the action of "shaking hands" in association with the words "Shake hands" as a result of voice recognition, by a predetermined value. In this case, in the same way as the flow diagram shown in FIG. **9**, when the user says "Shake hands" in the normal mode, the frequency of occurrence (probability) of the action of "shaking hands" is increased.

The behavior learning processes illustrated in FIG. **9** and FIG. **10** have difficulty learning an action, unregistered as a behavioral model in the behavior model memory **33**A, in response to a voice pronounced by the user. If the robot learns an action, unregistered as a behavior model, in response to the voice pronounced by the user, a robot owned by an individual may have more diversity in the personality of its own, and offers more entertainment value of the robot.

The behavior learning process performed in such a manner is now discussed, with reference to a flow diagram shown in FIG. **11**.

In step **S31**, the behavior decision unit **33** sets the motors $\mathbf{7}_1$ through $\mathbf{7}_N$. to be in a posture setting enable state through the posture transition unit **34** and the data control unit **35**. Specifically, when an external force is applied onto the robot in step **S31**, the states of the motors $\mathbf{7}_1$ through $\mathbf{7}_N$ (the angles of rotation thereof) are modifiable (in the posture setting enable state).

In the posture setting enable state, the motors $\mathbf{7}_1$ through $\mathbf{7}_N$ maintain the current states at an upper torque limit. When an external force above the upper torque limit acts on the robot, the behavior decision unit **33** changes the states of the motors (i.e., allows the motors to rotate) in response to the external force.

The process then proceeds to step **S32**. The behavior decision unit **33** allows at least one of the motors $\mathbf{7}_1$ through $\mathbf{7}_N$ to rotate in response to the external force, and determines whether the robot changes the posture thereof. This determination is performed based on the outputs from the rotary encoders $\mathbf{12}_1$ through $\mathbf{12}_N$.

When it is determined in step **S32** that the robot remains unchanged in the posture thereof, the process proceeds to step **S33**. The behavior decision unit **33** determines whether a predetermined duration of time has elapsed since the posture setting enable state began, in other words, whether time is up. When it is determined in step **S33** that time is up, in other words, when it is determined that the user has applied no external force to the robot, the process proceeds to step **S40**.

When it is determined that the predetermined duration of time has not elapsed yet, the process returns to step **S32**, and cycles through step **S32** and step **S33**.

When it is determined in step **S32** that the robot has changed the posture thereof, the process proceeds to step **S34**. The behavior decision unit **33** registers a new row for an action (hereinafter referred to as a new action) for taking a posture after the posture change, in the behavior association table (see FIG. **6**) of the behavior association table memory **33**B. Furthermore, the behavior decision unit **33** adds a node for the new action in the behavior model (see FIG. **6**) of the behavior decision unit **33**, and an arc between the newly added arc and the existing node.

The process then proceeds to step **S35**. The behavior decision unit **33** determines whether the voice recognition result has been received from the voice recognition module. When it is determined in step **S35** that no voice recognition result has been received, the process goes to step **S36**. The behavior decision unit **33** determines whether a predetermined duration of time has elapsed since the process step in **S34**, in other words, determines whether time is up. When it is determined in step **S36** that time is up, in other words, when the user has spoken no particular words since the new action was registered in the behavior association table and the behavioral model, the process proceeds to step **S40**.

When it is determined in step **S36** that the predetermined duration of time has not elapsed yet, the process returns to step **S35**. The voice recognition result is received. Otherwise, the process cycles through step **S35** and step **S36** until time is up.

When it is determined in step **S35** that the voice recognition result has been received, the process proceeds to step **S37**. The behavior decision unit **33** determines whether the voice recognition result is an unknown word.

When it is determined in step **S37** that the voice recognition result is an unknown word, the process goes to step **S38**. In the same way as in step **S13** shown in FIG. **9**, the behavior decision unit **33** additionally registers an unknown word entry in the behavior association table (see FIG. **6**) of the behavior association table memory **33**B. The process then proceeds to step **S39**.

When it is determined in step **S37** that the voice recognition result is a known word, the process goes to step **S39**, skipping step **S38**. The behavior decision unit **33** increases, in the behavior association table, the correlation score of the word, corresponding to the voice recognition result from the voice recognition module, with the new action, by a predetermined value. The process then proceeds to step **S40**.

The posture setting state is then disabled in step **S40**, and the behavior learning process ends.

For example, in the behavior learning process shown in FIG. **11**, the user may cause the robot to lie down in a "lying down" posture with the foot units **6**A and **6**B folded inwardly and the bottom of the torso unit **2** resting on the ground. The behavior decision unit **33** additionally registers a new action for taking the "lying down" posture in the behavior association table and the behavioral model. When the user says "Lie down", the behavior decision unit **33** increases the correlation score of the word "Lie down" as the voice recognition result in response to the voice of the user with the action of "lying down" by a predetermined value.

When the action of "lying down" is not registered as a behavioral model, the voice "Lie down" of the user causes the robot to take the action of "lying down". The user thus allows the user's own robot to take a diversity of actions.

The switching of the operation mode from the normal mode to the learning mode is performed in response to the above-mentioned trigger. Alternatively, the operation mode is switched by a dedicated switch arranged on the robot. Alternatively, a communications interface for infrared communication may be mounted on the robot, and a command for changing the operation mode may be transmitted from a remote control unit. The proximity of the user to the robot may be detected though electrostatic induction or electromagnetic induction means or by using a pryroelectric-effect sensor. When the user remains in the proximity to the robot for a predetermined duration of time or more, the operation mode may be switched.

To perform the behavior learning process shown in FIG. **11**, the application of an external force to the motors $\mathbf{7}_1$ through $\mathbf{7}_N$ is detected from the output signals of the rotary encoders $\mathbf{12}_1$ through $\mathbf{12}_N$ or other signals (the angles of rotation of the motors $\mathbf{7}_1$ through $\mathbf{7}_N$, or the voltages across or the currents flowing through the motors $\mathbf{7}_1$ through $\mathbf{7}_N$). When the external force is continuously applied for a predetermined duration of time or more, the operation mode may be switched. In the behavior learning process shown in FIG. **11**, the operation mode may be switched in response to a combination of the proximity of the user to the robot and the application of the external force.

The embodiment of the present invention have been discussed in connection with the robot for entertainment (such as the toy robot). The present invention is not limited to this type of robot, and finds many applications in a diversity of robots including industrial robots.

In the discussion of this embodiment of the present invention, the motors $\mathbf{7}_1$ through $\mathbf{7}_N$ are used as actuators for driving the robot. The present invention is not limited to these motors. Other actuators, a loudspeaker, a buzzer, an illumination device may be employed as long as these components cause the robot to take action.

In the discussion of this embodiment of the present invention, the CPU **20** executes the software program, thereby carrying out the series of the above-referenced process steps. The series of the above-referenced process steps may be carried out by dedicated hardware components.

The software program is pre-stored in the program memory **21** (see FIG. **3**). Alternatively, the software program may be stored, temporarily or permanently, in a removable storage medium, such as floppy disk, CD-ROM (Compact Disc Read Only Memory), MO (Magneto-optical) disk, DVD (Digital Versatile Disc), magnetic disc, semiconductor memory, etc. The removable storage medium may be supplied in the form of a package software, and the software program is then installed onto the program memory **21** of the robot.

The software program is thus installed from the removable storage medium. Alternatively, the software program may be installed onto the program memory **21** from a download site via a digital broadcasting satellite in a wireless fashion or through a LAN (Local Area Network) or the Internet in a wired fashion.

When the software program is updated in version, the updated program may be easily installed onto the program memory **21**.

It is not necessary that the process steps describing the software program for the CPU **20** to perform a diversity of processes be chronologically performed in the order stated in each flow diagram. Several process steps may be performed in parallel or separately (in a parallel processing or processing through object).

The software program may be executed by a single CPU or may be executed by a plurality of CPUs in distributed processing.

In accordance with the present invention, the drive unit for driving the robot is controlled while the voice of the user

is recognized. The association between the voice recognition result and the behavior of the robot is thus set up. A robot taking a diversity of actions in response to the voice thus results.

What is claimed is:

1. A robot control device for controlling the action of a robot, comprising:

voice recognition means for recognizing a first voice and a second voice;

control means for controlling drive means that drives the robot for action in accordance with said first voice recognized by said voice recognition means;

setting means responsive to said voice recognition means for setting an association between the first recognized voice provided by the voice recognition means and said control means to control the action of the robot in accordance with said second recognized voice recognized by said voice recognition means after said action is performed in said robot.

2. The robot control device according to claim **1**, further comprising assessment means for assessing said second voice recognized by the voice recognition means,

wherein the control means controls the drive means to drive the robot to perform a predetermined action in response to said first recognized voice, and

wherein the setting means sets an association between the predetermined action and the first voice recognition result in accordance with the assessment result of the second recognized voice.

3. The robot control device according to claim **1**, wherein the setting means registers an association between the first recognized voice and the action of the robot in an association table that associates a word, which the voice recognition means receives for voice recognition, with the action of the robot.

4. The robot control device according to claim **3**, wherein when said voice recognition means indicates that the word of said first recognized voice is an unknown one, the setting means registers the unknown word in the association table, and also registers an association between the registered unknown word and the action of the robot.

5. The robot control device according to claim **1**, further comprising posture detector means for detecting a posture of the robot,

wherein the setting means sets an association between the first recognized voice and an action which the robot needs to take to reach the posture detected by the posture detector means.

6. The robot control device according to claim **1**, wherein the control means controls the drive means in accordance with the association set between the action of the robot and the first recognized voice.

7. A robot control method for controlling the action of a robot, comprising the steps of:

recognizing a first voice;

controlling drive means that drives the robot for action in accordance with said recognized first voice;

recognizing a second voice; and

setting an association between the first recognized voice and the action of the robot in accordance with said second recognized voice.

8. A storage medium for storing a computer-executable code for controlling the action of a robot, the computer-executable code performing the steps of:

recognizing a first voice;

controlling drive means that drives the robot for action in accordance with said recognized first voice;

recognizing a second voice; and

setting an association between the first recognized voice and the action of the robot in accordance with said second recognized voice.

* * * * *