US005922076A

United States Patent [19]

Garde

[11] **Patent Number: 5,922,076**

[45] **Date of Patent: Jul. 13, 1999**

[54] **CLOCKING SCHEME FOR DIGITAL SIGNAL PROCESSOR SYSTEM**

[75] Inventor: **Douglas Garde**, Dover, Mass.

[73] Assignee: **Analog Devices, Inc.**, Norwood, Mass.

[21] Appl. No.: **08/931,665**

[22] Filed: **Sep. 16, 1997**

[51] **Int. Cl.**[6] **G06F 1/04**

[52] **U.S. Cl.** **713/600**

[58] **Field of Search** 395/553, 555, 395/556, 559; 713/500, 501, 600; 709/400, 248

[56] **References Cited**

U.S. PATENT DOCUMENTS

5,611,075	3/1997	Garde	395/480
5,619,720	4/1997	Garde et al.	395/800
5,685,005	11/1997	Garde et al.	395/800

Primary Examiner—Thomas M. Heckler

Attorney, Agent, or Firm—Wolf, Greenfield & Sacks, P.C.

[57] **ABSTRACT**

A digital signal processing system includes a cluster of processors and a host. A host can access each of the processors through an external bus system that interconnects the host with each of the processors. An external port of each of the processors operates at one of a local clock frequency and host clock frequency, the local clock frequency and host clock frequency being asynchronous with one another. The host operates at the host clock frequency. Upon a host access of one of the processors, the clock frequency of operation of the external parallel port of each processor automatically is controlled to operate at the host clock frequency. In an embodiment, each processor also includes a core processor that operates at a core clock frequency that is a multiple of the local clock frequency, asynchronous with the host clock frequency. Thus, the speed of operation of the core processor and that of the external parallel port can be optimized independently.

12 Claims, 6 Drawing Sheets

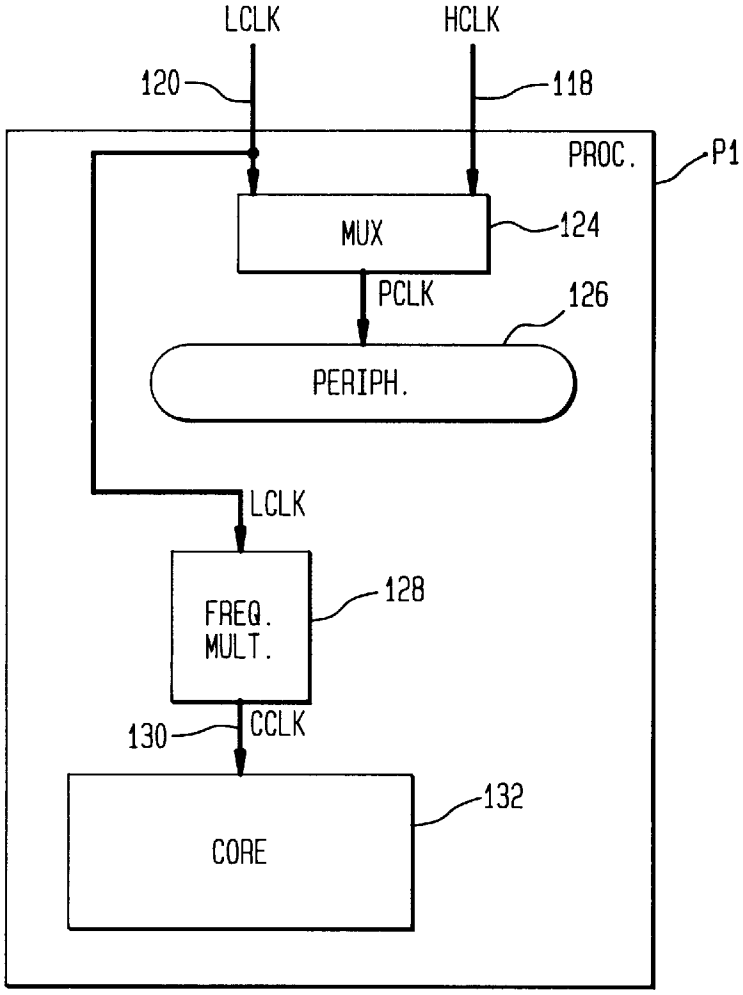

FIG. 1

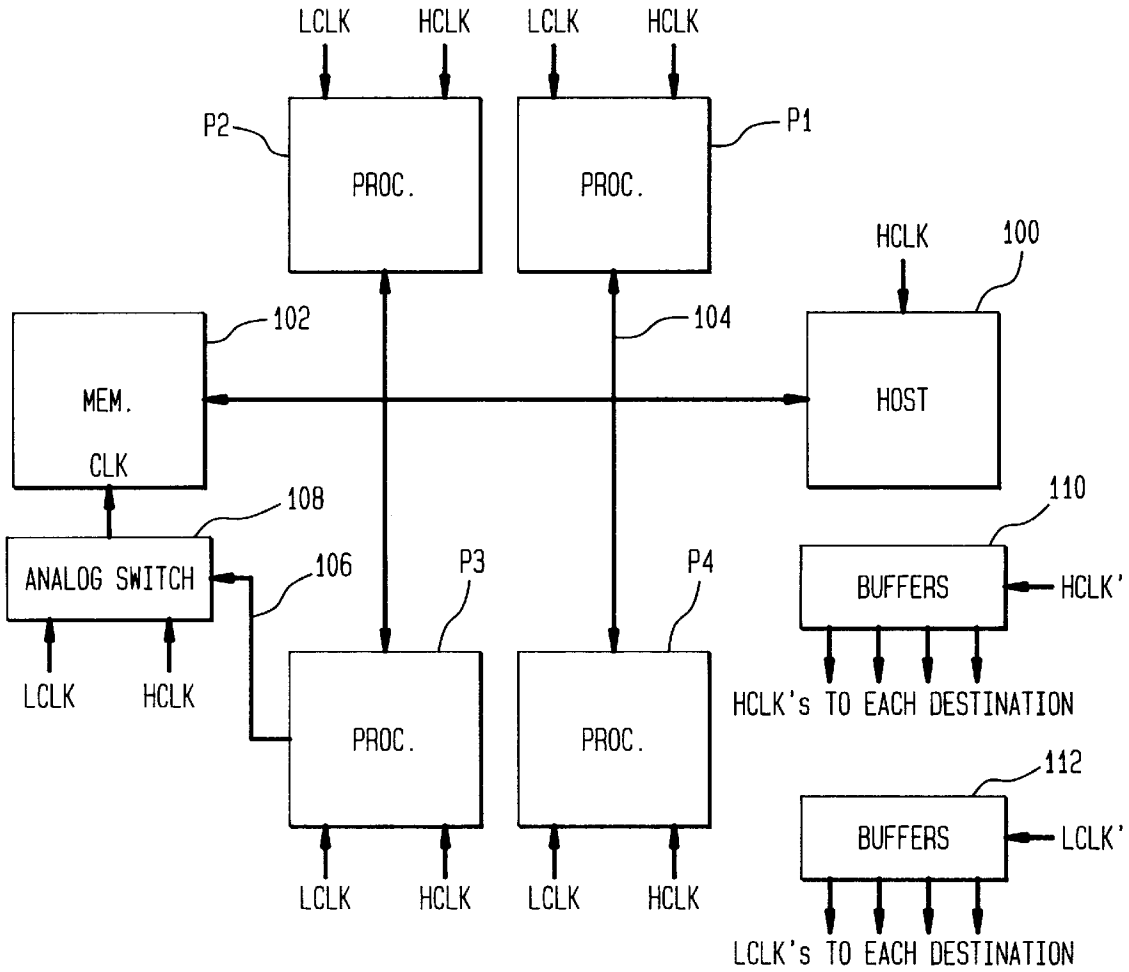
LCLK
HCLK
LCLK
HCLK
P2
PROC.
PROC.
P1
HCLK
100
102
104
MEM.
CLK
HOST
108
110
ANALOG SWITCH
106
P3
P4
BUFFERS
HCLK'
LCLK
HCLK
HCLK's TO EACH DESTINATION
PROC.
PROC.
112
BUFFERS
LCLK'
LCLK
HCLK
LCLK
HCLK
LCLK's TO EACH DESTINATION

FIG. 2

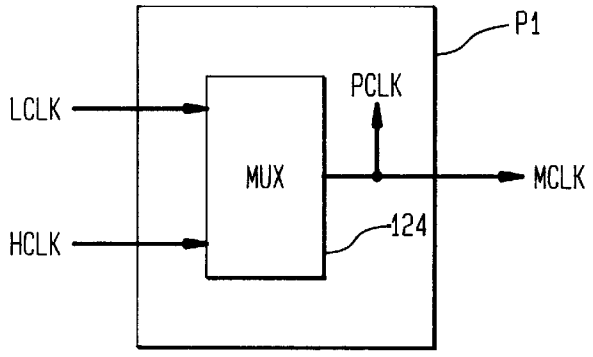
P1
LCLK
PCLK
MUX
MCLK
HCLK
124

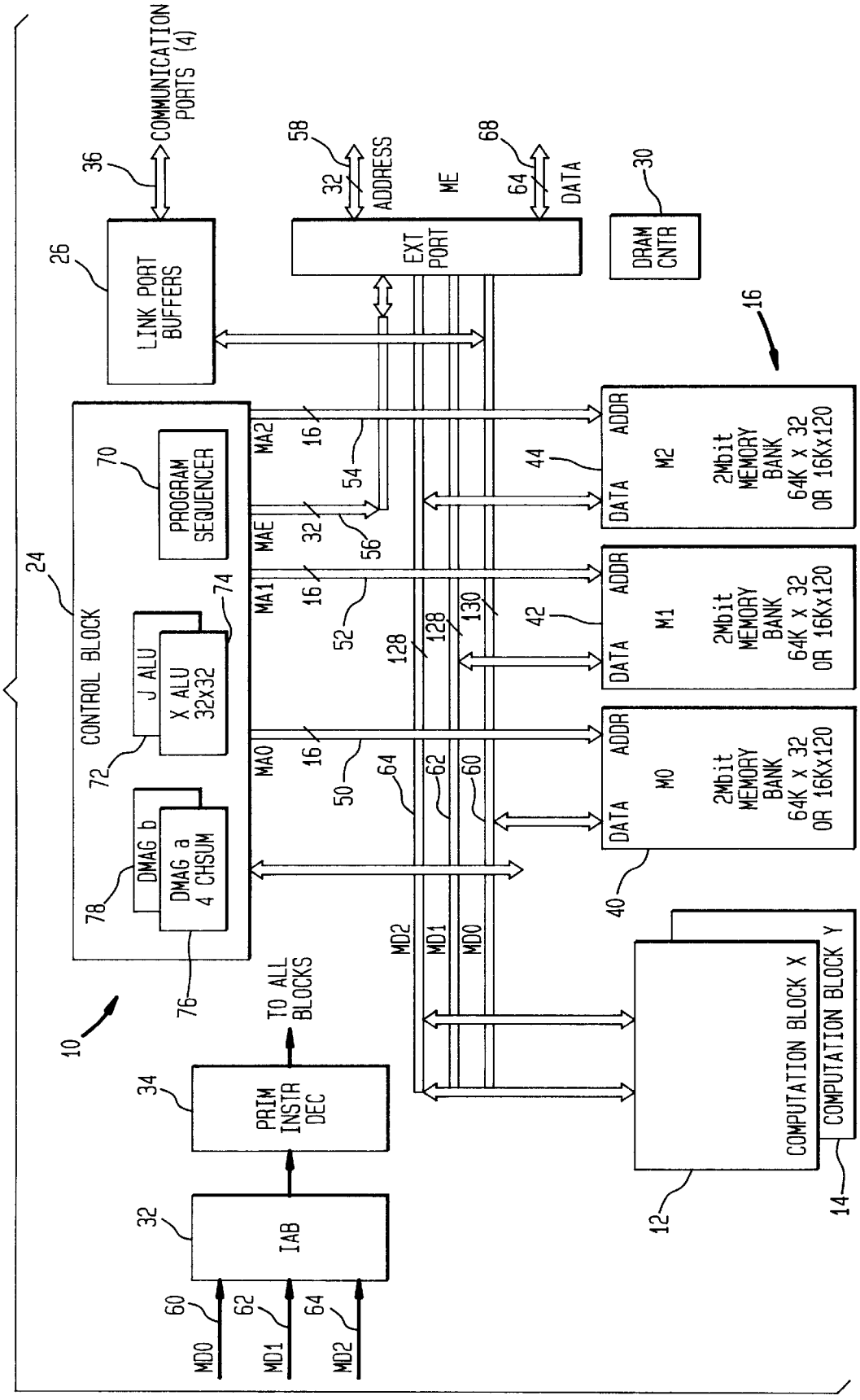
COMMUNICATION PORTS (4)
36
LINK PORT BUFFERS
26
58
32
ADDRESS
ME
68
64
DATA
EXT PORT
30
DRAM CNTR
16
24
CONTROL BLOCK
70
PROGRAM SEQUENCER
J ALU
X ALU 32x32
74
72
DMAG b
DMAG a 4 CHSUM
78
76
10
MA2
MAE
MA1
MA0
16
32
54
56
52
50
128
130
64
62
60
44
42
40
DATA
ADDR
M2
M1
M0
2Mbit MEMORY BANK 64K x 32 OR 16Kx120
MD2
MD1
MD0
TO ALL BLOCKS
34
PRIM INSTR DEC
32
IAB
COMPUTATION BLOCK X
COMPUTATION BLOCK Y
12
14

FIG. 3

FIG. 4

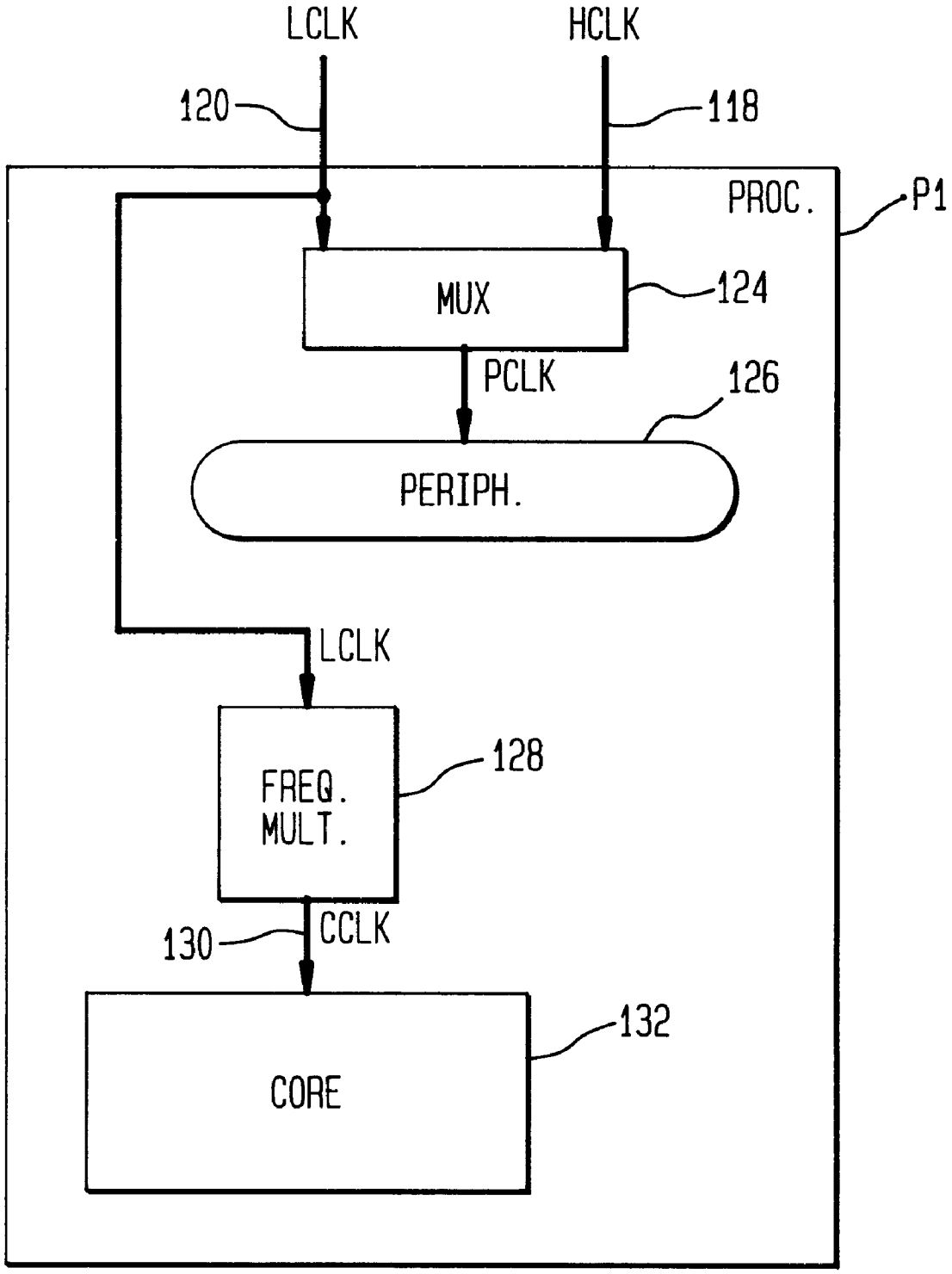
LCLK
HCLK
120
118
PROC.
P1
MUX
124
PCLK
126
PERIPH.
LCLK
FREQ.
MULT.
128
130
CCLK
132
CORE

FIG. 5

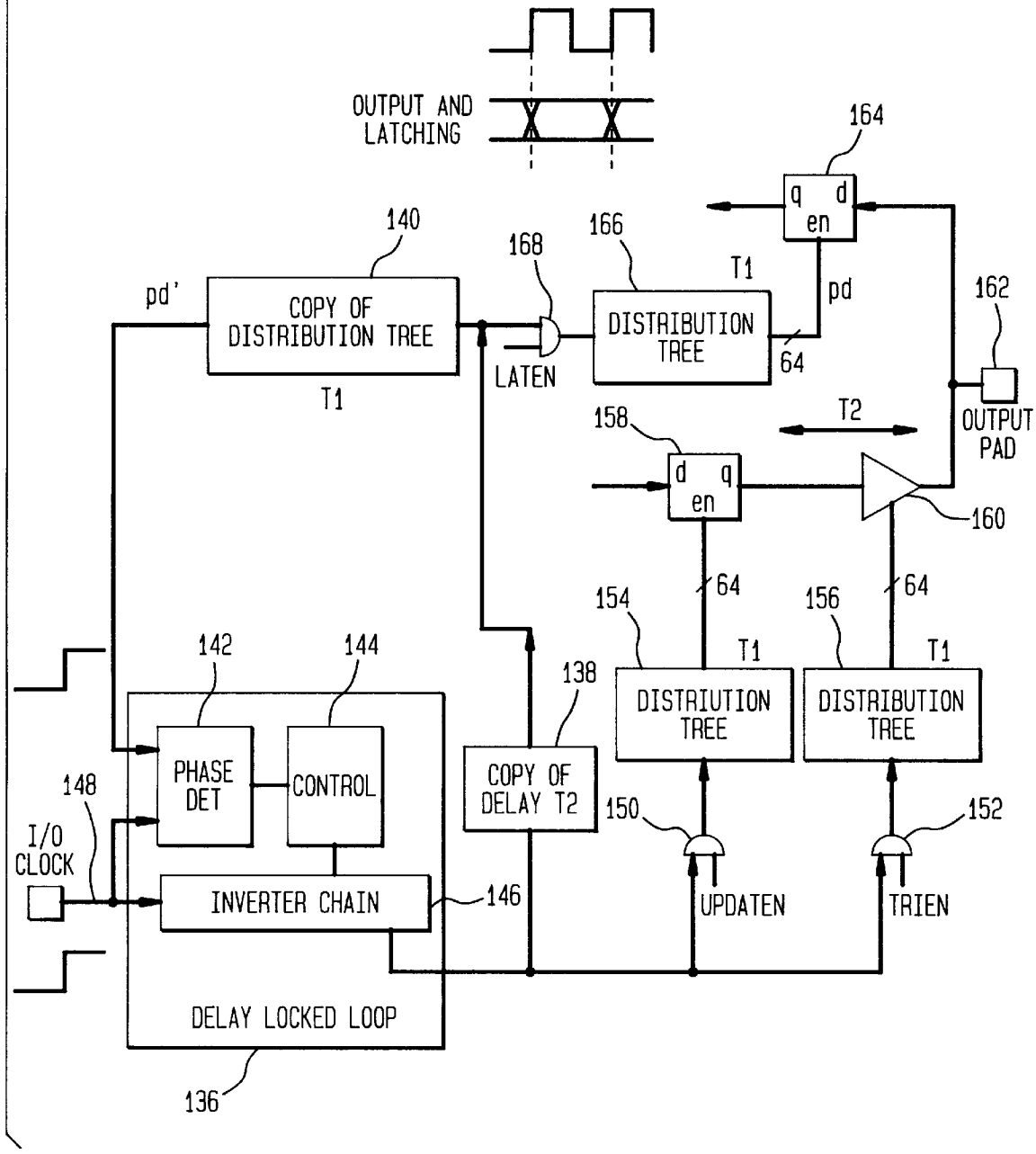
OUTPUT AND LATCHING
164
q d
en
140
168
166
T1
pd'
COPY OF DISTRIBUTION TREE
DISTRIBUTION TREE
pd
162
LATEN
64
T1
T2
OUTPUT PAD
158
d q
en
160
64
64
154
156
T1
T1
142
144
138
DISTRIUTION TREE
DISTRIBUTION TREE
PHASE DET
CONTROL
COPY OF DELAY T2
148
150
152
I/O CLOCK
INVERTER CHAIN
146
UPDATEN
TRIEN
DELAY LOCKED LOOP
136

FIG. 6

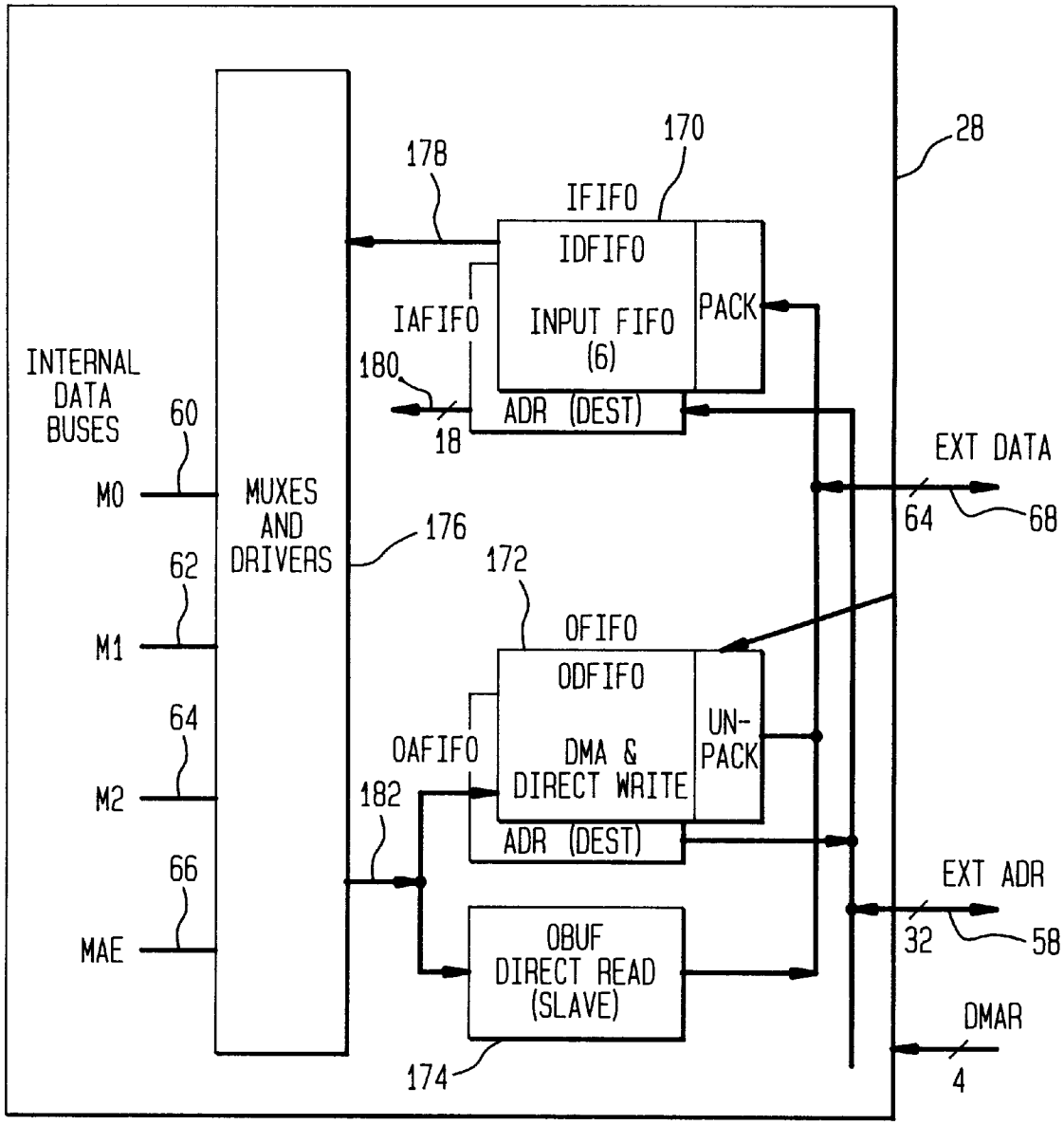
28
170
178
IFIFO
IDFIFO
INPUT FIFO
(6)
PACK
IAFIFO
180
ADR (DEST)
18
INTERNAL
DATA
BUSES
60
M0
MUXES
AND
DRIVERS
176
EXT DATA
64
68
62
M1
172
OFIFO
ODFIFO
DMA &
DIRECT WRITE
UN-
PACK
64
M2
OAFIFO
182
ADR (DEST)
66
MAE
OBUF
DIRECT READ
(SLAVE)
EXT ADR
32
58
DMAR
4
174

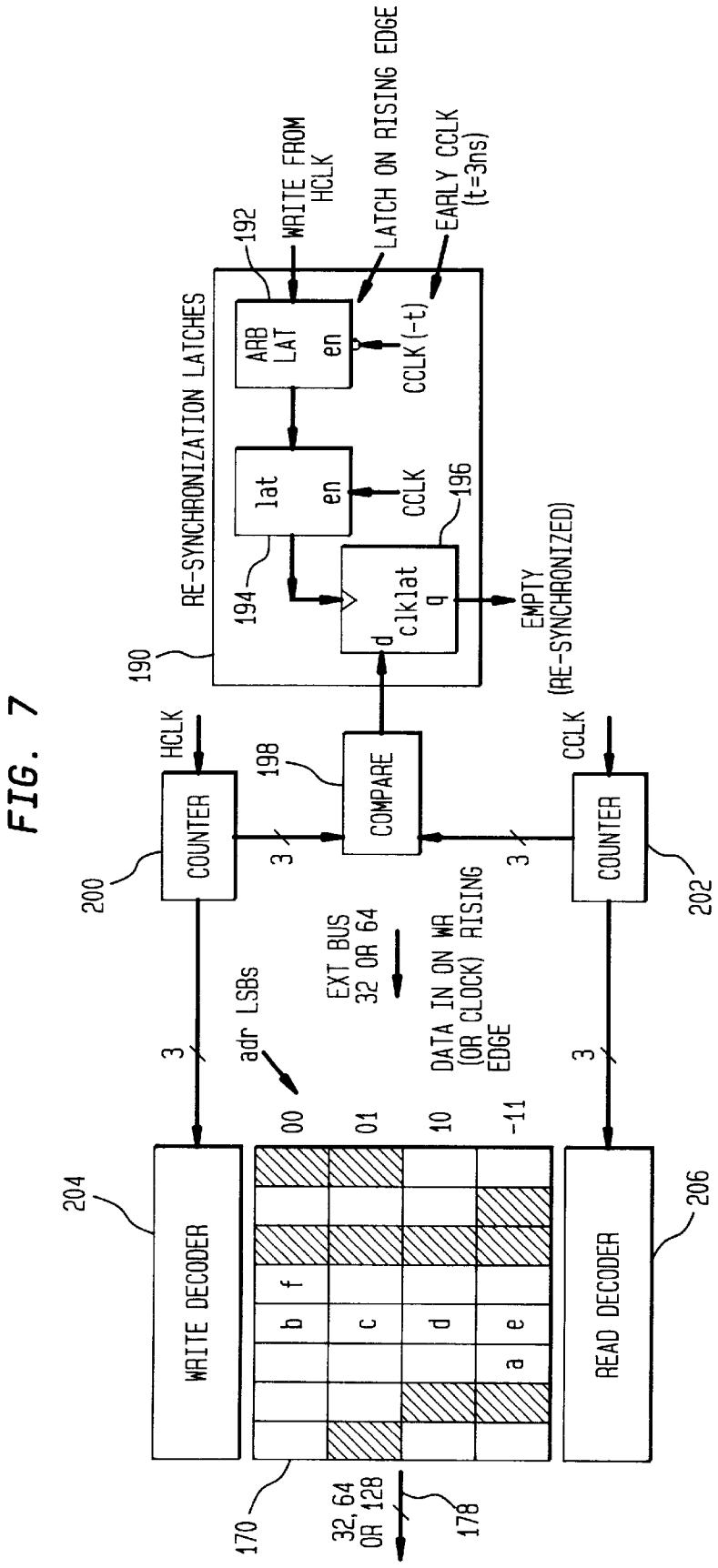
RE-SYNCHRONIZATION LATCHES
190
192
WRITE FROM HCLK
LATCH ON RISING EDGE
EARLY CCLK (t=3ns)
ARB LAT
en
CCLK(-t)
lat
en
CCLK
194
196
clklat
d
q
EMPTY (RE-SYNCHRONIZED)
HCLK
COUNTER
200
198
COMPARE
CCLK
COUNTER
202
3
3
3
3
adr LSBs
EXT BUS 32 OR 64
DATA IN ON WR (OR CLOCK) RISING EDGE
00
01
10
-11
WRITE DECODER
204
READ DECODER
206
a
b
c
d
e
f
170
32, 64 OR 128
178

FIG. 7

CLOCKING SCHEME FOR DIGITAL SIGNAL PROCESSOR SYSTEM

FIELD OF THE INVENTION

The present invention relates to digital signal processors, and more specifically, to a digital signal processor system and method having a unique asynchronous clocking scheme.

BACKGROUND OF THE INVENTION

A digital signal processor (DSP) is a special purpose computer that is designed to optimize performance for digital signal processing applications such as, for examples, fast Fourier transforms, digital filtering, image processing and speech recognition. Digital signal processing applications typically are characterized by real time operation, high interrupt rates and intensive numeric computations. In addition, digital signal processing applications tend to be intensive in memory access operations and to require the input and output of large quantities of data. Thus, designs of digital signal processors may be quite different from those of general purpose computers.

A typical digital signal processor includes at least one memory for storing digital signal processing operations instructions as well as operands used in the digital signal processing operations, and a core processor, connected to the memory, for carrying out such operations. A digital signal processor also typically includes a peripheral input/output (I/O) device enabling communication with, and the transfer of data to/from, other processors and/or external devices. The core processor includes some type of computation unit for performing the digital signal processing operations (i.e., computations) on the operands based on the instructions. Many different computational schemes as well as data storage and transferring schemes have been developed for optimizing speed, accuracy, size and performance of digital signal processors.

A digital signal processor commonly operates based upon receipt of a single input clock. From this single input clock are derived a core processor clock, on which the core processor operates, and an I/O clock, on which the I/O device operates. It is not uncommon for the input clock and the I/O clock to be maintained at the same frequency.

The core processor clock may be a multiple of this input clock such that the core processor operates at a different (typically greater) clock frequency than that of the I/O device. The speed of the I/O device is limited by the speed of the external signals upon which they operate. The speed of such external signals may be limited by physical constraints and capacitances and inductances of external devices and buses. The core processor is not so limited. Therefore, it is preferable to have the core processor operate at a different, and more optimal clock frequency.

Some digital signal processors allow the user to select a ratio (e.g., X2, X2.5, X3, X3.5, X4 . . .) by which the input clock will be multiplied to produce the core processor clock. This enables the user to select, within a limited range, a core processor frequency that is best for the particular processor.

As the geometries of processors shrink, internal speed paths improve, enabling faster operation. For a particular processor, therefore, there is an optimal speed at which the processor can operate. A limitation in currently available processors is that the core processor frequency is limited by the input clock and the user-selectable core clock ratios available.

In a digital signal processing system, a cluster (i.e., four, six or eight) of processors may be interconnected by an external bus system. A host computer, connected to each of the processors in the system through the bus system, may access any of the processors. The host computer operates at a host clock frequency that may be unrelated (asynchronously related) to the input clock frequency (I/O clock frequency) of each of the processors in the cluster.

When the host wishes to access any of the processors, either the host clock and the processor I/O clock must be synchronized, or asynchronous access must be enabled. Synchronization would require some type of external synchronizing interface between the host and each processor in the cluster. Alternatively, the provision of asynchronous access would require an additional, asynchronous processor I/O interface. To date, each of the approaches aimed at enabling an asynchronously operating host to access a processor requires complex and expensive circuitry. In addition, each of such approaches may be difficult for a user to implement and use.

It is a general object of the present invention to provide an improved processor clocking scheme.

SUMMARY OF THE INVENTION

One embodiment of the invention is directed to a digital signal processor. The digital signal processor receives a local clock and a system clock, wherein the local clock frequency and the system clock frequency may be asynchronous with one another. A core processor operates at a core clock frequency is a multiple of the local clock frequency. An external parallel port, coupled to the core processor, is operable at the system clock frequency or at the local clock frequency.

In an embodiment of the invention, the digital signal processor further includes a resynchronization circuit, coupled between the external parallel port and the core processor, that receives an input command signal and latches in the command signal when valid.

Another embodiment of the invention is directed to a digital signal processing system. The system includes a plurality of processors, each connected to another by an external bus system through an external port. A host, connected to each of the plurality of processors through the external bus system, operates at a host clock frequency. The host can access each processor through the external bus system. The external port of each of the processors operates either at a local clock frequency or at the host clock frequency, or at a multiple of either the local clock frequency or host clock frequency. Upon a host access, the clock frequency of the external port of each processor automatically is controlled to operate at the host clock frequency.

In one embodiment, the system further includes an external memory unit, connected to the host and to at least one of the processors through the external bus system. The memory also operates either at the local clock frequency or at the host clock frequency. Upon a host access of either one of the processors or of the memory unit, the clock frequency of the memory unit also automatically is controlled to operate at the host clock frequency.

In an embodiment, the clock frequency of operation of the external port of each processor is user-controlled.

In an embodiment, each processor includes a switch that receives a local clock and a host clock and selects one for operation of the external parallel port. In one embodiment, the switch includes a multiplexer.

In an embodiment, the clock frequency of the memory unit is controlled by a master processor to which it is connected.

In an embodiment of the system, each processor of the system includes a core processor that operates at a multiple of the local clock frequency, wherein the local clock frequency may be asynchronous with the host clock frequency. In this embodiment, each processor further includes a resynchronization circuit, coupled between the core processor and the external port, that latches in a received command signal when valid.

A further embodiment of the invention is directed to a method of digital signal processing. The method includes: connecting a host to a plurality of digital signal processors through a bus system; operating an external port of each processor at a local clock frequency, a host clock frequency, or a multiple of either the local clock frequency or host clock frequency; and automatically switching operation of the external port of each processor to the host clock frequency upon an access by the host of one of the processors.

In an embodiment, the method further includes the step of operating a core processor of each digital signal processor at a multiple of the local clock frequency, which may be asynchronous with the system clock frequency.

The features and advantages of the present invention will be more readily understood and apparent from the following detailed description of the invention, which should be read in conjunction with the accompanying drawings and from the claims which are appended to the end of the detailed description.

BRIEF DESCRIPTION OF THE DRAWING

For a better understanding of the present invention, reference is made to the accompanying drawings, which are incorporated herein by reference.

FIG. **1** is a block diagram of a system including a cluster of processors according to one embodiment of the invention.

FIG. **2** is a block diagram of an alternate embodiment of the system shown in FIG. **1**.

FIG. **3** is a block diagram of the internal components of an exemplary processor that may be used with the present invention.

FIG. **4** is a part functional, part structural block diagram of certain processor components and the different clock signals on which the components operate.

FIG. **5** is a block diagram of an exemplary delay calibration circuit that may be used with a processor of the invention.

FIG. **6** is a block diagram of an exemplary external port block that may be employed within a processor of the invention.

FIG. **7** is a part functional, part structural block diagram of a resynchronization circuit that may be employed within a processor of the invention.

DETAILED DESCRIPTION

One embodiment of the present invention is directed to a cluster of digital signal processors interconnected by a bus system, and a host that can access any of the processors through the bus system. A periphery of each of the processors, connected to the bus system, operates at one of a local clock frequency and a host clock frequency. The host operates at the host clock frequency and, when the host accesses one of the processors, the clock frequency of operation of the periphery of each of the processors automatically is switched to the host clock frequency.

Another embodiment of the present invention is directed to a digital signal processor having a core processor that may operate asynchronously with the periphery of the processor. In particular, the periphery of the processor, such as an external parallel port, may operate at either a local clock frequency or a host clock frequency, wherein a user may select between the two. A core processor of the digital processor operates at a multiple of the local clock frequency. The local clock frequency and the host clock frequency may be independently generated and may be asynchronous with one another.

FIG. **1** is a block diagram showing an exemplary embodiment of the present invention including a cluster of digital signal processors **P1–P4**. The system shown also includes a host **100** and a memory **102**. The host **100**, memory **102**, and processors **P1–P4** are interconnected by a bus system **104**. The host may include an external computer that communicates with each of processors **P1–P4** and external memory **102**. External memory **102** may be any suitable external memory that operates with such a digital signal processing system such as Synchronous Dynamic Random Access Memory (SDRAM). Data may be written to or read from each of the processors, as well as to/from the memory.

Preferably, the external bus operates as a pipelined bus. In other words, the data may arrive one, two or three cycles after an address is issued, corresponding to a pipeline delay of one, two or three cycles respectively. Addresses may be issued on every cycle. Preferably, all signals are sampled on the clock signal rising edge and must meet a set-up time and a hold-time requirement.

During operation, host **100** may access any one of processors **P1–P4** or memory **102** through bus **104**. Host **100** operates on a host clock HCLK at a host clock frequency. Each processor **P1–P4** receives the host clock HCLK and a local clock LCLK. In one embodiment, as explained in greater detail below, the host clock HCLK and local clock LCLK are independently generated and may be asynchronous with one another.

A periphery of each processor, that portion of the processor, such as an external parallel port, which couples the internal components of the processor to the external bus system **104**, may operate at either the local clock LCLK frequency or the host clock HCLK frequency. In one embodiment, as explained below, this operation is user-selectable. Similarly, the memory may operate at either the local clock LCLK frequency or the host clock HCLK frequency.

In this embodiment, a buffer **110**, having multiple series-terminated outputs, provides the host clock HCLK signal to each destination, which, in this embodiment, includes host **100**, each processor **P1–P4**, and memory **102**. Similarly, buffer **112**, also having multiple series-terminated outputs, provides local clock LCLK signal to each destination, which, in this embodiment, includes each processor **P1–P4** and memory **102**. Each clock signal is provided on a separate trace, output from the buffer. The buffers ensure that the same clock signal timing is provided to each designation.

During operation, a periphery of each processor **P1–P4** and memory **102** may be operating at the local clock LCLK frequency. When host **100** is to access one of processors **P1–P4** or memory **102**, the clock frequency of operation of the periphery of each processor **P1–P4** automatically is switched from that of the local clock LCLK to that of the host clock HCLK. At the same time, the clock frequency of operation of the memory also is switched automatically from that of the local clock LCLK to that of the host clock HCLK.

In one embodiment, the switching occurs when a Host Bus Request (HBR) or Host Bus Grant (HBG) control signal

is asserted by the host. Such control signal may be provided to each processor causing an internal switch (not shown) in each processor to switch the clock frequency from the local clock LCLK to the host clock HCLK. The switch internal to each processor may include a multiplexer, or the like. Glitch suppression is required for any clock signal switch to the processor. For example, glitch suppression can be attained by waiting for one clock to go low, and holding the clock output until the other clock goes low, and then driving the output with the first clock at that point.

In one embodiment, an external analog switch **108** selects one of host clock HCLK or local clock LCLK to clock the memory. A master processor P3 provides a control signal along line **106**, at the appropriate time, causing analog switch **108** to select the host clock HCLK signal and provides such signal to memory **102**. Switch **108** preferably is a low-resistance analog switch, such that the switching delay is maintained to be less than 0.2 nanoseconds. For example, the switch may be made from a low-resistance Field Effect Transistor. For external switch **108**, the switching from the local clock LCLK to the host clock HCLK does not have to be glitch-free because no memory access is occurring during the switch over.

In an alternate embodiment of the system shown in FIG. **1**, switch **108** of FIG. **1** is replaced by an internal multiplexer **124**, shown in FIG. **2**. Such a system includes four processors P1–P4, host **100**, and memory **102** (see FIG. **1**). Like the system of FIG. **1**, the host operates at a host clock HCLK frequency and a periphery (I/O port) of each of the processors P1–P4 operates at a periphery clock PCLK frequency which may be equal to either the host clock HCLK frequency or at the local clock LCLK frequency. Memory **102** operates at a memory clock MCLK frequency which also may be equal to either the host clock HCLK frequency or at the local clock LCLK frequency. As in the embodiment of FIG. **1**, upon a host access (of memory or a processor), periphery clock PCLK and memory clock MCLK automatically are switched to host clock HCLK. The switching may be performed internally of each processor by multiplexer **124**. Multiplexer **124** is controlled to switch automatically to the host clock HCLK upon a host bus access or grant. The output of multiplexer **124** includes periphery clock PCLK signal and memory clock MCLK signal. One master processor P1–P4 may be selected to provide memory clock MCLK signal along bus **116** to memory **102**.

Each processor shown in the systems of FIGS. **1** and **2** may be implemented having the components shown in FIG. **3**. As shown, the principle components of DSP **10** are computation blocks **12** and **14**, a memory **16**, a control block **24**, link port buffers **26**, an external port **28**, a DRAM controller **30**, an instruction alignment buffer (IAB) **32** and a primary instruction decoder **34**. Computation blocks **12** and **14**, instruction alignment buffer **32**, primary instruction decoder **34** and control block **24** constitute a core processor which performs the main computation and data processing functions of DSP **10**. External port **28** controls external communications via an external address bus **58** and an external data bus **68**. External port **28** may constitute the periphery of DSP **10**. Link port buffers **26** control external communication via communication ports **36**. DSP **10** is preferably configured as a single monolithic integrated circuit.

Memory **16** includes three independent, large capacity memory banks **40**, **42** and **44**. In an embodiment, each of memory banks **40**, **42** and **44** has a capacity of 64K words of 32 bits each. Each of the memory banks **40**, **42** and **44** may have a 128-bit data bus. Up to four consecutive aligned data words of 32 bits each can be transferred to or from each memory bank in a single clock cycle.

The elements of DSP **10** are interconnected by buses for efficient, high speed operation. Each of the buses includes multiple lines for parallel transfer of binary information. A first address bus **50** (MA0) interconnects memory bank **40** (M0) and control block **24**. A second address bus **52** (MA1) interconnects memory bank **42** (M1) and control block **24**. A third address bus **54** (MA2) interconnects memory bank **44** (M2) and control block **24**. Each of the address buses **50**, **52** and **54** may be 16-bits wide. An external address bus **56** (MAE) interconnects external port **28** and control block **24**. External address bus **56** is connected through external port **28** to external address bus **58**. Each of the external address buses **56** and **58** may be 32 bits wide. A first data bus **60** (MD0) interconnects memory bank **40**, computation blocks **12** and **14**, control block **24**, link port buffers **26**, IAB **32** and external port **28**. A second data bus **62** (MD1) interconnects memory bank **42**, computation blocks **12** and **14**, control block **24**, link port buffers **26**, IAB **32** and external port **28**. A third data bus **64** (MD2) interconnects memory bank **44**, computation blocks **12** and **14**, control block **24**, link port buffers **26**, IAB **32** and external port **28**. The data buses **60**, **62** and **64** are connected through external port **28** to external data bus **68**. Each of the data buses **60**, **62** and **64** may be 128 bits wide, and external data bus **68** may be 64 bits wide.

The first address bus **50** and the first data bus **60** comprise a bus for transfer of data to and from memory bank **40**. The second address bus **52** and the second data bus **62** comprise a second bus for transfer of data to and from memory bank **42**. The third address bus **54** and the third data bus **64** comprise a third bus for transfer of data to and from memory bank **44**. Since each of memory banks **40**, **42** and **44** has a separate bus, memory banks **40**, **42** and **44** may be accessed simultaneously. As used herein, "data" refers to binary words, which may represent either instructions or operands that are associated with the operation of DSP **10**. In a typical operating mode, program instructions are stored in one of the memory banks, and operands are stored in the other two memory banks. Thus, at least one instruction and two operands can be provided to computation blocks **12** and **14** in a single clock cycle. As described below, each of memory banks **40**, **42**, and **44** is configured to permit reading and writing of multiple data words in a single clock cycle. The simultaneous transfer of multiple data words from each memory bank in a single clock cycle is accomplished without requiring an instruction cache or a data cache.

The control block **24** includes a program sequencer **70**, a first integer ALU **72** (J ALU), a second integer ALU **74** (K ALU), a first DMA address generator **76** (DMAG A) and a second DMA address generator **78** (DMAG B). Integer ALU's **72** and **74**, at different times, execute integer ALU instructions and perform data address generation. During execution of a program, program sequencer **70** supplies a sequence of instruction addresses on one of address buses **50**, **52**, **54** and **56**, depending on the memory location of the instruction sequence. Typically, one of memory banks **40**, **42** or **44** is used for storage of the instruction sequence. Each of integer ALU's **72** and **74** supplies a data address on one of address buses **50**, **52**, **54** and **56**, depending on the location of the operand required by the instruction. Assume, for example, that an instruction sequence is stored in memory bank **40** and that the required operands are stored in memory banks **42** and **44**. In this case, the program sequencer supplies instruction addresses on address bus **50** and the accessed instructions are supplied to the instruction alignment buffer **32**, as described below. Integer ALU's **72** and **74**

may, for example, output addresses of operands on address buses **52** and **54**, respectively. In response to the addresses generated by integer ALU's **72** and **74**, memory banks **42** and **44** supply operands on data buses **62** and **64**, respectively, to either or both of computation blocks **12** and **14**. Memory banks **40**, **42** and **44** are interchangeable with respect to storage of instructions and operands.

Program sequencer **70** and the integer ALU's **72** and **74** may access an external memory (not shown) via external port **28**. The desired external memory address is placed on address bus **56**. The external address is coupled through external port **28** to external address bus **58**. The external memory supplies the requested data word or data words on external data bus **68**. The external data is supplied via external port **28** and one of the data buses **60**, **62** and **64** to one or both of computation blocks **12** and **14**. The DRAM controller **30** controls the external memory.

As indicated above, each of the memory banks **40**, **42** and **44** may have a capacity of 64k words of 32 bits each. Each memory bank may be connected to a data bus that is 128 bits wide. In an alternative embodiment, each data bus may be 64 bits wide, and 64 bits are transferred on each of clock phase **1** and clock phase **2**, thus providing an effective bus width of 128 bits. Multiple data words can be accessed in each memory bank in a single clock cycle. Specifically, data can be accessed as single, dual or quad words of 32 bits each. Dual and quad accesses require the data to be aligned in memory. Typical applications for quad data accesses are the fast Fourier transform (FFT) and complex FIR filters. Quad accesses also assist double precision operations. Preferably, instructions are accessed as quad words. However, as discussed below, instructions are not required to be aligned in memory.

Using quad word transfers, four instructions and eight operands, each of 32 bits, can be supplied to computation blocks **12** and **14** in a single clock cycle. The number of data words transferred and the computation block or blocks to which the data words are transferred are selected by control bits in the instruction. The single, dual, or quad data words can be transferred to computation block **12**, to computation block **14**, or to both. Dual and quad data word accesses improve the performance of DSP **10** in many applications by allowing several operands to be transferred to the computation blocks **12** and **14** in a single clock cycle. The ability to access multiple instructions in each clock cycle allows multiple operations to be executed in each cycle, thereby improving performance. If operands can be supplied faster than they are needed by the computation blocks **12** and **14**, then there are memory cycles left over that can be used by DMA address generators **76** and **78** to provide new data to the memory banks **40**, **42** and **44** during those unused cycles, without stealing cycles from the core processor. Finally, the ability to access multiple data words makes it possible to utilize two or more computation blocks and to keep them supplied with operands. The ability to access single or dual data words reduces power consumption in comparison with a configuration where only quad data words are accessed.

In processor **10** shown in FIG. **3**, external port **28** may comprise a periphery of the processor and would operate at a periphery clock PCLK. The remaining components of DSP **10**, in one embodiment of the invention, would operate at a core clock CCLK, which is a multiple of local clock LCLK, as described below.

FIG. **4** is a part structural, part functional block diagram of some components of processor **P1** and the clock signals on which they operate. The processor **P1** shown includes a core processor **132**, operating at a core clock CCLK frequency, and a periphery **126**, operating at either a local clock LCLK frequency or a host clock HCLK frequency, or a multiple of either LCLK or HCLK. Periphery **126** may consist of external port **28** that communicates with external data bus **68** and external address bus **58**, shown in FIG. **3**.

Processor **132** receives both the local clock LCLK signal and the host clock HCLK signal as inputs. Not shown in FIG. **4** is a delay calibration circuit through which each input clock signal is run to account for propagation delays, as described in greater detail hereinafter with reference to FIG. **5**. Both are provided to switch **124** which selects one as the periphery clock PCLK to periphery **126**, as described above with reference to FIGS. **1** and **2**.

The local clock LCLK signal also is provided to a frequency multiplier **128**. Frequency multiplier **128** multiplies the local clock LCLK signal by a ratio selected by the user and outputs the product, which is the core clock signal CCLK, on line **130** to core processor **132**. Frequency multiplier may, for example, include the ratios, X2, X2.5, X3, X3.5, X4, one of which is selected by a user to produce the core clock CCLK.

This embodiment of the invention enables the frequency of operation of the core processor **132** to be optimized independently of the frequency of operation of the periphery **126**. The frequency of operation of the periphery **126** may be limited by the external bus should such periphery consist of the external parallel port. Such a limitation would not, however, affect the speed of the core processor. The invention also enables the frequency of operation of the periphery to be optimized independently of the speed of operation of the core.

As stated, the host clock HCLK and local clock LCLK are generated independently and may be asynchronous with one another. For example, host clock HCLK may be 66 MHz and local clock LCLK may be 100 MHz. When periphery **126** operates on the local clock LCLK, it appears to operate synchronously with core processor **132**. As described above, with reference to FIGS. **1** and **2**, the switch to operating on host clock HCLK occurs automatically upon an access request by the host. Because the core clock CCLK is related to the local clock LCLK and because the local clock LCLK may be asynchronously related to the host clock HCLK, periphery **126** may appear to operate asynchronously with core processor **132** (when operating at the host clock HCLK frequency). To account for such operation, an asynchronous interface (not shown in FIG. **4**) exists between periphery **126** and core processor **132**, and will be described in greater detail below.

Given the high speeds at which the bus operates, skew in the periphery clock PCLK and the memory clock MCLK should be minimized. In addition, skew in the core clock CCLK should be removed in the frequency multiplexer. In one embodiment of the present invention, a delay calibration loop is employed to calibrate out the undesired skew. The input to the delay calibration circuit is the input clock signal, whether LCLK or HCLK. A multiplexer may select between the two. Preferably and alternatively, two delay calibration circuits may be employed, one for each input clock signal.

An exemplary delay calibration circuit for use with the processor of the invention is shown in block diagram form in FIG. **5**. Such delay calibration circuit may be used for LCLK or for HCLK. The delay calibration circuit ensures the latching of data into the processor (or out from the processor) precisely at a rising edge of the clock signal, accounting for propagation delays of the signal through

processor elements such as a distribution tree. With the circuit, a latch control signal is asserted a delay time period before a rising edge of the appropriate clock signal. A delay-locked loop (DLL) provides another clock signal, similar to and in phase with the input clock signal, but delayed by one period minus internal input propagation delays of the clock signal. This other clock signal enables a latch to latch in data or latch data out at an appropriate time, precisely at the rising edge of the clock signal with accounted for propagation delays.

As shown, the delay calibration circuit includes a DLL **136**, a delay element **138** and a delay element **140**. Delay element **138** provides a delay of T_2 to the signal output by DLL **136**, which delay T_2 corresponds to the output delay of an output driving pad consisting of latch **158** and driver **160**. Delay **140**, provides a delay of T_1 to the signal input, which delay T_2 corresponds to the propagation delay of the signal through the distribution tree, shown at **154**, **156** and **166**.

DLL **136** includes a phase detector **142**, a control circuit **144**, and an inverter chain **146**. When data is latched into the processor, signal pd enables latch **164** to latch data in at a rising edge of signal pd. Signal pd' output by delay circuit **140** has a delay T_1 corresponding to that of distribution tree **166**. DLL **136** ensures that the periphery clock PCLK input to the DLL on line **148** is synchronous with clock signal pd' such that latch **164** is latched synchronously with the rising edge of PCLK, minus propagation delays. Similarly, the signals provided to the output driving pad including those which enable latch **158** and driver **160**, are synchronous with the rising edge of the input clock, accounting for appropriate delays. Thus, the actual latch control signals, whether input or output, actually are asserted one clock signal period later than an initial input clock period, minus appropriate delays accounted therefor, whether those of distribution tree and/or output pad.

FIG. **6** is a block diagram of an exemplary external port block **28** employed within each processor of the invention. As described, external port **28** operates at the periphery clock PCLK that may be equal to local clock LCLK or the host clock HCLK, one asynchronous with the other. The external port receives and transmits data on external data bus **68** (in this exemplary embodiment, 64 bits wide), and receives and transmits addresses on address bus **58** (in this exemplary embodiment, 32 bits wide).

A number of operations can be carried out by a (slave) processor based on commands received from a different (master) processor. The operations are communicated through the external port block. These operations include reading data from the slave processor and writing data to the master processor, wherein a number of different read and write operations are available. The particular read and write operations available do not in particular form part of the invention but help illustrate the advantages of using the clocking scheme of the invention.

As shown, the external port block includes an input first-in-first-out (FIFO) buffer **170**, an output FIFO **172**, and an output buffer **174**. Input FIFO **170**, output FIFO **172** and output buffer **174** communicate through a multiplexers and drivers block **176** to internal data buses **60**, **62**, **64** and **56**, described above with reference to FIG. **3**.

Because the external port block of the present invention may operate asynchronously with the core processor, a resynchronization circuit is used to ensure that the received command signal, whether read or write, is valid and latched in at an appropriate time. The command signal should be latched in upon a rising edge of the clock signal. When a command is received by the external port block, it is latched therein. Then it is provided through the resynchronization latch circuit **190** shown in FIG. **7**.

As examples, a write operation and a read operation will be described below with reference to FIG. **7**. During a write operation, a write command is provided from a master processor to a slave processor. The master processor puts the address of the data to be written and the actual data to be written in its output FIFO **172**. The slave processor, to be written to, puts the address and data, received from the master process, in its input FIFO **170**.

During a read operation, a read command is provided from a master processor to a slave processor. The master processor puts the address (from where the data is to be read) in its output FIFO **172**. The slave processor puts the received address in its input FIFO **170**. Once read, the data is put into the output buffer **174** of the slave processor, which bypasses the output FIFO **172**.

Upon receipt of a command signal, such as a write command signal, resynchronization latch circuit **190** causes a delay before that command signal is considered to be valid, at which time writing of data to the input FIFO **170** is performed. First, the write command signal is latched by an arbitration latch **192** on the rising edge of the core clock CCLK signal. Then, the write commane signal is latched by latch **194** on the rising edge of core clock CCLK, a delay time period t later. In one embodiment, this time period t may be equal to 3 nanoseconds. It should be appreciated that the arbitration latch is very fast. A delay t then occurs before a command signal is latched by the second latch such that the command signal is deemed to be valid before the appropriate operation is performed. In this exemplary embodiment, the output of latch **194** clocks a D flip-flop **196** which, in turn, controls a comparator **198** to begin the operation, but the invention is not so limited.

Once the second latch latches in the command signal, the operation may be carried out. In this embodiment, the contents of a write counter **200** are compared with the contents of a read counter **202** by comparator **198**. Write counter **200** is updated each time a location in the input FIFO **170** is written to. Similarly, read counter **202** is updated each time a location is read from. If the contents of write counter **200** are equal to the contents of read counter **202**, then the write pointer is pointing to the same location as the read pointer, indicating that the location pointed to is empty. Data therefore can be written to that location. Other techniques than that shown and described are available for this purpose.

As shown, for the input FIFO, write counter **200** is controlled by host clock HCLK and read counter **202** is controlled by local clock LCLK. While the resynchronization latch has been shown coupled to the input FIFO, a similar circuit will be used for the output FIFO as well. For the output FIFO (not shown), the write counter is controlled by the core clock CCLK and the read counter is controlled by the host clock HCLK.

Having thus described at least one illustrative embodiment of the invention, various alterations, modifications and improvements will readily occur to those skilled in the art. Such alterations, modifications and improvements are intended to be within the spirit and scope of the invention. Accordingly, the foregoing description is by way of example only and is not intended as limiting. The invention is limited only as defined in the following claims and the equivalents thereto

What is claimed is:

1. A digital signal processor comprising:

an external parallel port, that is operable at a first clock frequency or at a second clock frequency; and

a core processor, coupled to the external parallel port, that operates at a core clock frequency, that is a multiple of the second clock frequency;

wherein the first clock frequency and the second clock frequency are asynchronous with one another.

2. The digital signal processor as claimed in claim **1** wherein a user may select between the first clock frequency and the second clock frequency for operation of the external parallel port.

3. The digital signal processor as claimed in claim **1** further including a resynchronization circuit, coupled between the external parallel port and the core processor, that receives a command signal and latches in the command signal a delayed time period following a core clock signal.

4. A digital signal processing system comprising:

a plurality of processors, each processor connected to another by an external bus system through an external port, the external port of each processor operating at a local clock frequency, at a host clock frequency, or at a multiple of the local clock frequency or host clock frequency; and

a host, connected to each of the plurality of processors through the external bus system, the host operating at the host clock frequency, wherein the host can access each processor through the external bus system; and

upon a host access of one of the processors, the clock frequency of the external port of each processor automatically is controlled to operate at the host clock frequency.

5. The digital signal processing system as claimed in claim **4** wherein the clock frequency of operation of each external parallel port of each processor is user-controlled.

6. The digital signal processing system as claimed in claim **4** further including a switch within each processor that receives a local clock and a host clock and selects one for operation of the external parallel port.

7. The digital signal processing system as claimed in claim **4** further including an external memory, connected to the host and at least one of the processors through the external bus system, wherein the memory also operates either at the local clock frequency or at the host clock frequency, and whereupon a host access, the clock frequency of the memory also automatically is switched to operate at the host clock frequency.

8. The digital signal processing system as claimed in claim **7** wherein the clock frequency of the memory is controlled by a master processor to which it is connected.

9. The digital signal processing system as claimed in claim **4** wherein each processor includes a core processor that operates at a multiple of the local clock frequency, the local clock frequency being asynchronous with the host clock frequency.

10. The digital signal processing system as claimed in claim **9** wherein each processor further includes a resynchronization circuit, coupled between the core processor and the external parallel port, that receives a command signal and latches in the command signal a delayed time period following a core clock signal.

11. A method of digital signal processing comprising:

connecting a host to a plurality of digital signal processors through a bus system;

operating an external port of each processor at a local clock frequency, a host clock frequency or a multiple of the local clock frequency or host clock frequency; and

automatically switching operation of the external port of each processor to the host clock frequency upon access by the host of one of the processors.

12. The method as claimed in claim **11** further comprising the step of operating a core processor of each digital signal processor at a multiple of the local clock frequency, the local clock frequency being asynchronous with the host clock frequency.

* * * * *