UNITED STATES DISTRICT COURT
FOR THE WESTERN DISTRICT OF TEXAS
WACO DIVISION

SPEIR TECHNOLOGIES LTD., Plaintiff, v. APPLE INC., Defendant.	Case No. 6:22-cv-00077-ADA **JURY TRIAL DEMANDED**

AMENDED COMPLAINT FOR PATENT INFRINGEMENT AGAINST APPLE INC.

This is an action for patent infringement arising under the Patent Laws of the United States of America, 35 U.S.C. § 1 *et seq.*, in which Plaintiff Speir Technologies Limited ("Plaintiff" or "Speir") makes the following allegations against Defendant Apple Inc. ("Defendant" or "Apple"):

INTRODUCTION

1. This amended complaint arises from Apple's unlawful infringement of the following United States patents owned by Plaintiff, which relate to improvements in mobile communications systems: United States Patent Nos. 8,345,780 ("the '780 Patent"), 7,110,779 ("the '779 Patent"), 7,321,777 ("the '777 Patent"), and 7,765,399 ("the '399 Patent") (collectively, the "Asserted Patents").

PARTIES

2. Plaintiff Speir Technologies Limited is a limited liability company organized and existing under the law of Ireland, with its principal place of business at The Hyde Building, Suite 23, The Park, Carrickmines, Dublin 18, Ireland. Speir is the sole owner by assignment of all rights,

title, and interest in the Asserted Patents, including the right to recover damages for past, present, and future infringement.

3. On information and belief, Defendant Apple Inc. is a publicly traded corporation organized under the laws of the State of California, with its principal place of business at One Apple Park Way, Cupertino, CA 95014. Apple may be served with process through its registered agent, CT Corporation System, at 818 West Seventh Street, Suite 930, Los Angeles, CA 90017.

JURISDICTION AND VENUE

4. This action arises under the patent laws of the United States, Title 35 of the United States Code. This Court has original subject matter jurisdiction pursuant to 28 U.S.C. §§ 1331 and 1338(a).

5. This Court has personal jurisdiction over Apple in this action because Apple has committed acts within this District giving rise to this action and has established minimum contacts with this forum such that the exercise of jurisdiction over Apple would not offend traditional notions of fair play and substantial justice. Apple, directly and through subsidiaries or intermediaries, has committed and continues to commit acts of infringement in this District by, among other things, making, using, importing, offering to sell, and selling products that infringe the Asserted Patents. Apple has not contested personal jurisdiction in this District in prior cases. *See, e.g.*, *Scramoge Tech. Ltd. v. Apple Inc.*, No.6:21-cv-00579-ADA, Dkt. No. 31, ¶ 5 (W.D. Tex. Sept. 14, 2021).

6. Venue is proper in this District under 28 U.S.C. §§ 1391 and 1400(b). Venue is proper in this District under 28 U.S.C. §§ 1391 and 1400(b). Apple is registered to do business in Texas, and upon information and belief, Apple has transacted business in this District and have committed acts of direct and indirect infringement in this District by, among other things, making,

using, offering to sell, selling, and importing products that infringe the Asserted Patents. Apple has regular and established places of business in this District, including at 12545 Riata Vista Cir., Austin, Texas 78727; 12801 Delcour Dr., Austin, Texas 78727; and 3121 Palm Way, Austin, Texas 78758.[1] Apple also has job listings for jobs relating to the accused 5G, Ultra-Wideband ("UWB"), and security technologies in Austin, Texas.[2]

THE ASSERTED PATENTS

7. On January 1, 2013, the United States Patent and Trademark Office issued U.S. Patent No. 8,345,780 ("the '780 Patent"), titled "Wireless communication system compensating for interference and related methods," after full and fair examination. Plaintiff is the assignee of all rights, title, and interest in and to the '780 Patent and possesses all rights of recovery under the '780 Patent, including the right to recover damages for past, present, and future infringement. On information and belief, Speir (its predecessors and any licensees) complied with 35 U.S.C. § 287 at all relevant times because Speir (its predecessors and any licensees) do not and did not make, offer for sale, or sell products that practice(d) the '780 Patent. The '780 Patent is valid and enforceable. A true and correct copy of the '780 Patent is attached hereto as Exhibit 1.

---

[1] *See, e.g.*, https://www.apple.com/newsroom/2019/11/apple-expands-in-austin/; https://www.google.com/maps/place/Apple+Inc./@30.4324406,-97.7359733,15z/data=!4m5!3m4!1s0x0:0x5852421ec4ac410c!8m2!3d30.4322558!4d-97.7359386; https://www.apple.com/retail/domainnorthside/.

[2] *See, e.g.*, https://jobs.apple.com/en-us/details/200308092/modem-prototype-system-architect?team=HRDWR; https://jobs.apple.com/en-us/details/200206438/soc-qos-performance-engineer?team=HRDWR; https://jobs.apple.com/en-us/details/200294470/field-design-engineer?team=HRDWR; https://jobs.apple.com/en-us/details/200292503/nfc-uwb-field-design-engineer?team=HRDWR; https://jobs.apple.com/en-us/details/200303024/automation-tools-qa-design-engineer?team=HRDWR; https://jobs.apple.com/en-us/details/200330678/senior-security-engineer?team=SFTWR; https://jobs.apple.com/en-us/details/200344846/security-design-verification-engineer?team=HRDWR.

8. On September 19, 2006, the United States Patent and Trademark Office issued U.S. Patent No. 7,110,779 ("the '779 Patent"), titled "Wireless communication system including a wireless device locator and related methods," after full and fair examination. Plaintiff is the assignee of all rights, title, and interest in and to the '779 Patent and possesses all rights of recovery under the '779 Patent, including the right to recover damages for past, present, and future infringement. On information and belief, Speir (its predecessors and any licensees) complied with 35 U.S.C. § 287 at all relevant times because Speir (its predecessors and any licensees) do not and did not make, offer for sale, or sell products that practice(d) the '779 Patent. The '779 Patent is valid and enforceable. A true and correct copy of the '779 Patent is attached hereto as Exhibit 2.

9. On January 22, 2008, the United States Patent and Trademark Office issued U.S. Patent No. 7,321,777 ("the '777 Patent"), titled "Wireless communications system including a wireless device locator and related methods," after full and fair examination. Plaintiff is the assignee of all rights, title, and interest in and to the '777 Patent and possesses all rights of recovery under the '777 Patent, including the right to recover damages for past, present, and future infringement. On information and belief, Speir (its predecessors and any licensees) complied with 35 U.S.C. § 287 at all relevant times because Speir (its predecessors and any licensees) do not and did not make, offer for sale, or sell products that practice(d) the '777 Patent. The '777 Patent is valid and enforceable. A true and correct copy of the '777 Patent is attached hereto as Exhibit 3.

10. On July 27, 2010, the United States Patent and Trademark Office issued U.S. Patent No. 7,765,399 ("the '399 Patent"), titled "Computer architecture for a handheld electronic device," after full and fair examination. Plaintiff is the assignee of all rights, title, and interest in and to the '399 Patent and possesses all rights of recovery under the '399 Patent, including the right to recover damages for past, present, and future infringement. On information and belief, Speir (its

predecessors and any licensees) complied with 35 U.S.C. § 287 at all relevant times because Speir (its predecessors and any licensees) do not and did not make, offer for sale, or sell products that practice(d) the '399 Patent. The '399 Patent is valid and enforceable. A true and correct copy of the '399 Patent is attached hereto as Exhibit 4.

APPLE'S INFRINGEMENT

11. The allegations provided below are exemplary and without prejudice to Plaintiff's infringement contentions provided pursuant to the Court's scheduling order and local rules. Plaintiff's claim construction contentions regarding the meaning and scope of the claim terms will be provided under the Court's scheduling order and local rules. As detailed below, each element of at least one claim of each of the Asserted Patents is literally present in the accused products. To the extent that any element is not literally present, each such element is present under the doctrine of equivalents. Plaintiff's analysis below should not be taken as an admission that the preamble is limiting. While publicly available information is cited below, Plaintiff may rely on other forms of evidence to prove infringement, including evidence that is solely in the possession of Apple and/or third parties.

12. The accused products include at least the following products, as well as products with reasonably similar functionality. Identification of the accused products will be provided in plaintiff's infringement contentions pursuant to the Court's scheduling order and local rules. Apple imports into the United States, uses, makes, offers for sale, and sells in the United States the following products and infringes the asserted claims of the patents-in-suit (the "Accused Products"):

- ’780 Patent Accused Products: iPhone 12, iPhone 12 Mini, iPhone 12 Pro, iPhone 12 Pro Max, iPhone 13, iPhone 13 Mini, iPhone 13 Pro, iPhone 13 Pro Max, iPad Pro, iPad Mini, and any other products with 5G functionality.
- ’779 Patent and ’777 Patent Accused Products: iPhone 11, iPhone 11 Pro, iPhone 11 Pro Max, iPhone 12, iPhone 12 Mini, iPhone 12 Pro, iPhone 12 Pro Max, iPhone 13, iPhone 13 Mini, iPhone 13 Pro, iPhone 13 Pro Max, AirTags, and any other products with UWB functionality.
- ’399 Patent Accused Products: iPhone 5s and all subsequently released iPhones, iPad Air and all subsequently released models, and MacBook computers with Touch ID.

COUNT I

INFRINGEMENT OF U.S. PATENT NO. 8,345,780

13. Plaintiff realleges and incorporates by reference the foregoing paragraphs as if fully set forth herein.

14. Apple has been and is now directly infringing the ’780 Patent, literally and/or under the doctrine of equivalents, in violation of 35 U.S.C. § 271(a), including by making, using, selling, and/or offering for sale in the United States or importing into the United States infringing products, including at least the Accused Products identified above. The Accused Products satisfy all of the claim limitations of one or more claims of the ’780 Patent, including but not limited to claim 9.

15. Claim 9 of the ’780 Patent recites “[a] wireless communications device operable to communicate with an other wireless communications device via a wireless communications link having at least one settable link characteristic.” To the extent the preamble is limiting, the Accused Products each comprise a wireless communications device operable to communicate with an other wireless communications device via a wireless communications link having at least one settable

link characteristic. For example, the Accused Products are configured to communicate with base stations using 5G cellular technology:

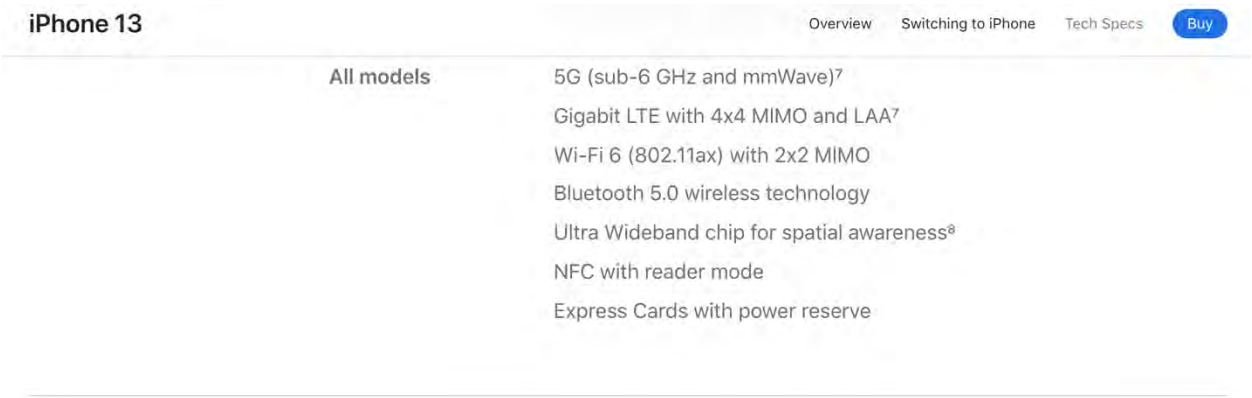

See https://www.apple.com/iphone-13/specs/.

16. Claim 9 of the '780 Patent recites that the "wireless communications device" comprises "an orthogonal frequency-division multiplexing (OFDM) wireless transceiver." The Accused Products each comprise an orthogonal frequency-division multiplexing (OFDM) wireless transceiver. For example, 5G uses OFDM in both the uplink and the downlink:

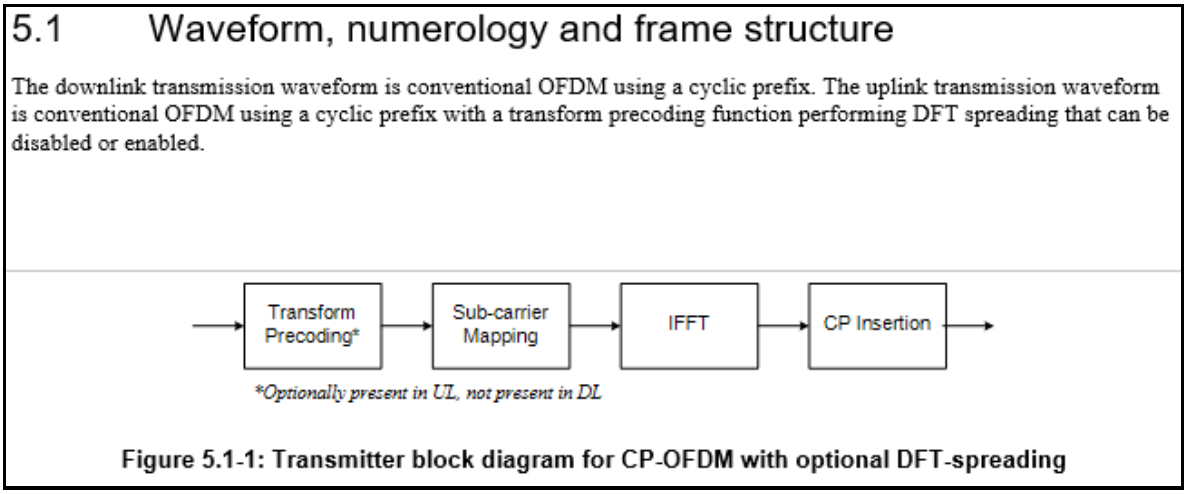

See 3GPP TS 38.300 V15.13.0.

5.3.1 OFDM baseband signal generation for all channels except PRACH

The time-continuous signal $s_l^{(p,\mu)}(t)$ on antenna port p and subcarrier spacing configuration μ for OFDM symbol $l \in \{0, 1, \ldots, N_{\text{slot}}^{\text{subframe},\mu} N_{\text{symb}}^{\text{slot}} - 1\}$ in a subframe for any physical channel or signal except PRACH is defined by

$$s_l^{(p,\mu)}(t) = \sum_{k=0}^{N_{\text{grid}}^{\text{size},\mu} N_{\text{sc}}^{\text{RB}} - 1} a_{k,l}^{(p,\mu)} \cdot e^{j2\pi\left(k + k_0^{\mu} - N_{\text{grid},x}^{\text{size},\mu} N_{\text{sc}}^{\text{RB}}/2\right)\Delta f\left(t - N_{\text{CP},l}^{\mu} T_c - t_{\text{start},l}^{\mu}\right)}$$

$$k_0^{\mu} = \left(N_{\text{grid},x}^{\text{start},\mu} + N_{\text{grid},x}^{\text{size},\mu}/2\right) N_{\text{sc}}^{\text{RB}} - \left(N_{\text{grid},x}^{\text{start},\mu_0} + N_{\text{grid},x}^{\text{size},\mu_0}/2\right) N_{\text{sc}}^{\text{RB}} 2^{\mu_0 - \mu}$$

where $t_{\text{start},l}^{\mu} \le t < t_{\text{start},l}^{\mu} + \left(N_{\text{u}}^{\mu} + N_{\text{CP},l}^{\mu}\right) T_c$ is the time within the subframe,

$$N_{\text{u}}^{\mu} = 2048\,\kappa \cdot 2^{-\mu}$$

$$N_{\text{CP},l}^{\mu} = \begin{cases} 512\,\kappa \cdot 2^{-\mu} & \text{extended cyclic prefix} \\ 144\,\kappa \cdot 2^{-\mu} + 16\kappa & \text{normal cyclic prefix,} \quad l = 0 \text{ or } l = 7 \cdot 2^{\mu} \\ 144\,\kappa \cdot 2^{-\mu} & \text{normal cyclic prefix,} \quad l \ne 0 \text{ and } l \ne 7 \cdot 2^{\mu} \end{cases}$$

See 3GPP TS 38.211 V15.9.0.

17. Claim 9 of the ’780 Patent recites “a controller coupled to said wireless transceiver and configured to store short term and long term historical characteristics of interference.” The Accused Products each comprise a controller coupled to said wireless transceiver and configured to store short term and long term historical characteristics of interference. For example, the controllers in the Accused Products are configured to store short term and long term historical characteristics of interference:

– *CSI-ReportConfig*

The IE *CSI-ReportConfig* is used to configure a periodic or semi-persistent report sent on PUCCH on the cell in which the *CSI-ReportConfig* is included, or to configure a semi-persistent or aperiodic report sent on PUSCH triggered by DCI received on the cell in which the *CSI-ReportConfig* is included (in this case, the cell on which the report is sent is determined by the received DCI). See TS 38.214 [19], clause 5.2.1.

***CSI-ReportConfig* information element**

```
-- ASN1START
-- TAG-CSI-REPORTCONFIG-START

CSI-ReportConfig ::=                SEQUENCE {
    reportConfigId                          CSI-ReportConfigId,
    carrier                                 ServCellIndex                   OPTIONAL,   -- Need S
    resourcesForChannelMeasurement          CSI-ResourceConfigId,
    csi-IM-ResourcesForInterference         CSI-ResourceConfigId            OPTIONAL,   -- Need R
    nzp-CSI-RS-ResourcesForInterference     CSI-ResourceConfigId            OPTIONAL,   -- Need R
    reportConfigType                        CHOICE {
        periodic                                SEQUENCE {
            reportSlotConfig                        CSI-ReportPeriodicityAndOffset,
            pucch-CSI-ResourceList                  SEQUENCE (SIZE (1..maxNrofBWPs)) OF PUCCH-CSI-Resource
        },
        semiPersistentOnPUCCH                   SEQUENCE {
            reportSlotConfig                        CSI-ReportPeriodicityAndOffset,
            pucch-CSI-ResourceList                  SEQUENCE (SIZE (1..maxNrofBWPs)) OF PUCCH-CSI-Resource

        },
        semiPersistentOnPUSCH                   SEQUENCE {
            reportSlotConfig                        ENUMERATED {sl5, sl10, sl20, sl40, sl80, sl160, sl320},
            reportSlotOffsetList                    SEQUENCE (SIZE (1.. maxNrofUL-Allocations)) OF INTEGER(0..32),
            p0alpha                                 P0-PUSCH-AlphaSetId
        },
        aperiodic                               SEQUENCE {
            reportSlotOffsetList                    SEQUENCE (SIZE (1..maxNrofUL-Allocations)) OF INTEGER(0..32)
        }
    },
    reportQuantity                          CHOICE {
        none                                    NULL,
        cri-RI-PMI-CQI                          NULL,
        cri-RI-i1                               NULL,
        cri-RI-i1-CQI                           SEQUENCE {
            pdsch-BundleSizeForCSI                  ENUMERATED {n2, n4}                                     OPTIONAL    -- Need S
        },
        cri-RI-CQI                              NULL,
        cri-RSRP                                NULL,
        ssb-Index-RSRP                          NULL,
        cri-RI-LI-PMI-CQI                       NULL
    },
```

See 3GPP TS 38.331 V15.15.0.

***CSI-ReportConfig* field descriptions**
carrier Indicates in which serving cell the *CSI-ResourceConfig* indicated below are to be found. If the field is absent, the resources are on the same serving cell as this report configuration.
codebookConfig Codebook configuration for Type-1 or Type-2 including codebook subset restriction.
cqi-FormatIndicator Indicates whether the UE shall report a single (wideband) or multiple (subband) CQI (see TS 38.214 [19], clause 5.2.1.4).
cqi-Table Which CQI table to use for CQI calculation (see TS 38.214 [19], clause 5.2.2.1).
csi-IM-ResourcesForInterference CSI IM resources for interference measurement. *csi-ResourceConfigId* of a *CSI-ResourceConfig* included in the configuration of the serving cell indicated with the field "carrier" above. The *CSI-ResourceConfig* indicated here contains only CSI-IM resources. The *bwp-Id* in that *CSI-ResourceConfig* is the same value as the *bwp-Id* in the *CSI-ResourceConfig* indicated by *resourcesForChannelMeasurement*.
csi-ReportingBand Indicates a contiguous or non-contiguous subset of subbands in the bandwidth part which CSI shall be reported for. Each bit in the bit-string represents one subband. The right-most bit in the bit string represents the lowest subband in the BWP. The choice determines the number of subbands (subbands3 for 3 subbands, subbands4 for 4 subbands, and so on) (see TS 38.214 [19], clause 5.2.1.4). This field is absent if there are less than 24 PRBs (no sub band) and present otherwise (see TS 38.214 [19], clause 5.2.1.4).
dummy This field is not used in the specification. If received it shall be ignored by the UE.
groupBasedBeamReporting Turning on/off group beam based reporting (see TS 38.214 [19], clause 5.2.1.4).
non-PMI-PortIndication Port indication for RI/CQI calculation. For each CSI-RS resource in the linked ResourceConfig for channel measurement, a port indication for each rank R, indicating which R ports to use. Applicable only for non-PMI feedback (see TS 38.214 [19], clause 5.2.1.4.2). The first entry in *non-PMI-PortIndication* corresponds to the NZP-CSI-RS-Resource indicated by the first entry in *nzp-CSI-RS-Resources* in the *NZP-CSI-RS-ResourceSet* indicated in the first entry of *nzp-CSI-RS-ResourceSetList* of the *CSI-ResourceConfig* whose *CSI-ResourceConfigId* is indicated in a CSI-MeasId together with the above *CSI-ReportConfigId*; the second entry in *non-PMI-PortIndication* corresponds to the NZP-CSI-RS-Resource indicated by the second entry in *nzp-CSI-RS-Resources* in the *NZP-CSI-RS-ResourceSet* indicated in the first entry of *nzp-CSI-RS-ResourceSetList* of the same *CSI-ResourceConfig*, and so on until the NZP-CSI-RS-Resource indicated by the last entry in *nzp-CSI-RS-Resources* in the in the *NZP-CSI-RS-ResourceSet* indicated in the first entry of *nzp-CSI-RS-ResourceSetList* of the same *CSI-ResourceConfig*. Then the next entry corresponds to the NZP-CSI-RS-Resource indicated by the first entry in *nzp-CSI-RS-Resources* in the *NZP-CSI-RS-ResourceSet* indicated in the second entry of *nzp-CSI-RS-ResourceSetList* of the same *CSI-ResourceConfig* and so on.
nrofReportedRS The number (N) of measured RS resources to be reported per report setting in a non-group-based report. N <= N_max, where N_max is either 2 or 4 depending on UE capability. (see TS 38.214 [19], clause 5.2.1.4) When the field is absent the UE applies the value 1.
nzp-CSI-RS-ResourcesForInterference NZP CSI RS resources for interference measurement. *csi-ResourceConfigId* of a *CSI-ResourceConfig* included in the configuration of the serving cell indicated with the field "carrier" above. The *CSI-ResourceConfig* indicated here contains only NZP-CSI-RS resources. The *bwp-Id* in that *CSI-ResourceConfig* is the same value as the *bwp-Id* in the *CSI-ResourceConfig* indicated by *resourcesForChannelMeasurement*.

See 3GPP TS 38.331 V15.15.0.

resourcesForChannelMeasurement Resources for channel measurement. *csi-ResourceConfigId* of a *CSI-ResourceConfig* included in the configuration of the serving cell indicated with the field "carrier" above. The *CSI-ResourceConfig* indicated here contains only NZP-CSI-RS resources and/or SSB resources. This *CSI-ReportConfig* is associated with the DL BWP indicated by *bwp-Id* in that *CSI-ResourceConfig*.
subbandSize Indicates one out of two possible BWP-dependent values for the subband size as indicated in TS 38.214 [19], table 5.2.1.4-2 . If *csi-ReportingBand* is absent, the UE shall ignore this field.
timeRestrictionForChannelMeasurements Time domain measurement restriction for the channel (signal) measurements (see TS 38.214 [19], clause 5.2.1.1).
timeRestrictionForInterferenceMeasurements Time domain measurement restriction for interference measurements (see TS 38.214 [19], clause 5.2.1.1).

See 3GPP TS 38.331 V15.15.0.

Many transmission features in modern radio-access technologies are based on the availability of more or less detailed knowledge about different characteristics of the radio channel over which a signal is to be transmitted. This may range from rough knowledge of the radio-channel path loss for transmit-power adjustment to detailed knowledge about the channel amplitude and phase in the time, frequency, and/or spatial domain. Many transmission features will also benefit from knowledge about the interference level experienced at the receiver side.

Such knowledge about different channel characteristics can be acquired in different ways and by measurements on either the transmitter side or receiver side of a radio link. As an example, knowledge about downlink channel characteristics can be acquired by means of device measurements. The acquired information could then be reported to the network for the setting of different transmission parameters for subsequent downlink transmissions. Alternatively, if it can be assumed that the channel is reciprocal, that is, the channel characteristics of inter-

See Erik Dahlman et al., 5G NR: The Next Generation Wireless Access Technology, Ch. 8 Abstract (2d Ed. 2018).

3.7.4 CHANNEL STATE INFORMATION REFERENCE SIGNAL

- The Channel State Information (CSI) Reference Signal is a multi-purpose downlink transmission. The Base Station can configure the UE to use the CSI Reference Signal for one or more of the following:
  - Channel State Information (CSI) Reporting: the UE provides CSI reports to the Base Station based upon measurements from the CSI Reference Signal. For example, the UE derives Channel Quality Indicators (CQI), Rank Indicators (RI) and Precoding Matrix Indicators (PMI) from CSI Reference Signal measurements (Channel State Information is described in section 13.6)

See Chris Johnson, 5G New Radio in Bullets, Section 3.7.4. (2019).

- Figure 186 illustrates an example Multi-User MIMO scenario which involves 3 UE being allocated a common set of Resource Blocks and symbols. Each UE is configured with 2 NZP CSI Reference Signal resources for 'Interference Measurement' and 1 NZP CSI Reference Signal resource for 'Channel Measurement'. The resources are configured such that 2 UE complete interference measurements while the 3rd UE receives its NZP CSI Reference Signal for channel measurement, i.e. 2 UE measure the interference levels generated when transmissions are scheduled towards the 3rd UE. This allows each UE to generate CQI reports which reflect the multi-user MIMO radio conditions

See Chris Johnson, 5G New Radio in Bullets, Section 3.7.4. (2019).

- If a UE is scheduled downlink resources using single user MIMO then interference levels are likely to be dominated by intercell interference (or thermal noise) and so UE measurements should target those sources of interference. 3GPP has specified a third category of CSI Reference Signal resources which can be used for this purpose. These resources are known as **CSI Interference Measurement (IM) Resources**. The Resource Elements configured for this purpose may be used to measure background interference levels, i.e. the serving cell does not transmit anything within these Resource Elements so the UE can measure background interference originating from neighbouring cells

See Chris Johnson, 5G New Radio in Bullets, Section 3.7.4. (2019).

8.1.4: CSI-IM—Resources for Interference Measurements

A configured CSI-RS can be used to derive information about the properties of the channel over which the CSI-RS transmitted. A CSI-RS can also be used to estimate the interference level by subtracting the expected received signal from what is actually received on the CSI-RS resource.

However, the interference level can also be estimated from measurements on so-called *CSI-IM* (Interference Measurement) resources.

See Erik Dahlman et al., 5G NR: The Next Generation Wireless Access Technology, § 8.1.4 (2d Ed. 2018).

– *CSI-ReportConfig*

The IE *CSI-ReportConfig* is used to configure a periodic or semi-persistent report sent on PUCCH on the cell in which the *CSI-ReportConfig* is included, or to configure a semi-persistent or aperiodic report sent on PUSCH triggered by DCI received on the cell in which the *CSI-ReportConfig* is included (in this case, the cell on which the report is sent is determined by the received DCI). See TS 38.214 [19], clause 5.2.1.

CSI-ReportConfig information element

```
-- ASN1START
-- TAG-CSI-REPORTCONFIG-START

CSI-ReportConfig ::=                SEQUENCE {
    reportConfigId                          CSI-ReportConfigId,
    carrier                                 ServCellIndex                   OPTIONAL,   -- Need S
    resourcesForChannelMeasurement          CSI-ResourceConfigId,
    csi-IM-ResourcesForInterference         CSI-ResourceConfigId            OPTIONAL,   -- Need R
    nzp-CSI-RS-ResourcesForInterference     CSI-ResourceConfigId            OPTIONAL,   -- Need R
    reportConfigType                        CHOICE {
        periodic                                SEQUENCE {
            reportSlotConfig                        CSI-ReportPeriodicityAndOffset,
            pucch-CSI-ResourceList                  SEQUENCE (SIZE (1..maxNrofBWPs)) OF PUCCH-CSI-Resource
        },
```

See 3GPP TS 38.331 V15.15.0.

18. Claim 9 of the '780 Patent recites that the "controller" is configured to "detect received interference." The Accused Products each comprise a controller configured to detect received interference. For example, the Accused Products are configured to receive the channel state information ("CSI") CSI-ReportConfig parameter structure that informs the user equipment ("UE") of the channel and interference measurements it should make:

- Figure 187 summarises the four categories of CSI Reference Signal resource. These categories are described in greater detail within the following sections. Note that three of the categories are configured within the *CSI-ReportConfig* parameter structure because these categories are associated with UE measurements and reporting. The fourth category is configured within *PDSCH-Config* because this category is used to define Reserved Resources which are not available to the PDSCH

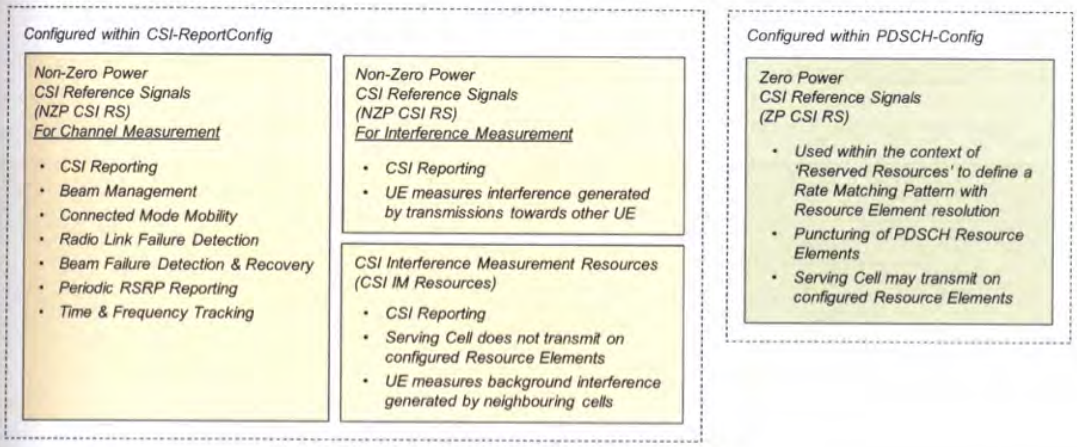

Figure 187 – Categories of CSI Reference Signal

- The *CSI-ReportConfig* parameter structure is used to configure NZP CSI Reference Signal Resources for both Channel Measurement and Interference Measurement. It is also used to configure CSI Interference Measurement (IM) Resources. The hierarchy of parameters associated with the configuration of these resources is illustrated in Figure 188. A set of three information elements corresponding to the three types of resource point towards appropriate instances of *CSI-ResourceConfig*. Instances of *CSI-ResourceConfig* are configured within the *CSI-MeasConfig* parameter structure

See Chris Johnson, 5G New Radio in Bullets, Section 3.7.4. (2019).

8.2: Downlink Measurements and Reporting

An NR device can be configured to carry out different measurements, in most cases with corresponding reporting to the network. In general, such a configuration of a measurement and corresponding reporting are done by means of a *report configuration*, in the 3GPP specifications [15] referred to as a *CSI-ReportConfig*.

Each resource configuration describes/indicates:

- The specific quantity or set of quantities to be reported;
- The downlink resource(s) on which measurements should be carried out in order to derive the quantity or quantities to be reported;
- How the actual reporting is to be carried out, for example, when the reporting is to be done and what uplink physical channel to use for the reporting.

See Erik Dahlman et al., 5G NR: The Next Generation Wireless Access Technology, § 8.2 (2d Ed. 2018).

– *CSI-ReportConfig*

The IE *CSI-ReportConfig* is used to configure a periodic or semi-persistent report sent on PUCCH on the cell in which the *CSI-ReportConfig* is included, or to configure a semi-persistent or aperiodic report sent on PUSCH triggered by DCI received on the cell in which the *CSI-ReportConfig* is included (in this case, the cell on which the report is sent is determined by the received DCI). See TS 38.214 [19], clause 5.2.1.

***CSI-ReportConfig* information element**

```
-- ASN1START
-- TAG-CSI-REPORTCONFIG-START

CSI-ReportConfig ::=                SEQUENCE {
    reportConfigId                          CSI-ReportConfigId,
    carrier                                 ServCellIndex                   OPTIONAL,   -- Need S
    resourcesForChannelMeasurement          CSI-ResourceConfigId,
    csi-IM-ResourcesForInterference         CSI-ResourceConfigId            OPTIONAL,   -- Need R
    nzp-CSI-RS-ResourcesForInterference     CSI-ResourceConfigId            OPTIONAL,   -- Need R
    reportConfigType                        CHOICE {
        periodic                                SEQUENCE {
            reportSlotConfig                        CSI-ReportPeriodicityAndOffset,
            pucch-CSI-ResourceList                  SEQUENCE (SIZE (1..maxNrofBWPs)) OF PUCCH-CSI-Resource
        },
        semiPersistentOnPUCCH                   SEQUENCE {
            reportSlotConfig                        CSI-ReportPeriodicityAndOffset,
            pucch-CSI-ResourceList                  SEQUENCE (SIZE (1..maxNrofBWPs)) OF PUCCH-CSI-Resource

        },
        semiPersistentOnPUSCH                   SEQUENCE {
            reportSlotConfig                        ENUMERATED {sl5, sl10, sl20, sl40, sl80, sl160, sl320},
            reportSlotOffsetList                SEQUENCE (SIZE (1.. maxNrofUL-Allocations)) OF INTEGER(0..32),
            p0alpha                                 P0-PUSCH-AlphaSetId
        },
        aperiodic                               SEQUENCE {
            reportSlotOffsetList                SEQUENCE (SIZE (1..maxNrofUL-Allocations)) OF INTEGER(0..32)
        }
    },
```

See 3GPP TS 38.331 V15.15.0.

– *CSI-MeasConfig*

The IE *CSI-MeasConfig* is used to configure CSI-RS (reference signals) belonging to the serving cell in which *CSI-MeasConfig* is included, channel state information reports to be transmitted on PUCCH on the serving cell in which *CSI-MeasConfig* is included and channel state information reports on PUSCH triggered by DCI received on the serving cell in which *CSI-MeasConfig* is included. See also TS 38.214 [19], clause 5.2.

CSI-MeasConfig information element

```
-- ASN1START
-- TAG-CSI-MEASCONFIG-START

CSI-MeasConfig ::=                    SEQUENCE {
    nzp-CSI-RS-ResourceToAddModList     SEQUENCE (SIZE (1..maxNrofNZP-CSI-RS-Resources)) OF NZP-CSI-RS-Resource   OPTIONAL, -- Need N
    nzp-CSI-RS-ResourceToReleaseList    SEQUENCE (SIZE (1..maxNrofNZP-CSI-RS-Resources)) OF NZP-CSI-RS-ResourceId OPTIONAL, -- Need N
    nzp-CSI-RS-ResourceSetToAddModList  SEQUENCE (SIZE (1..maxNrofNZP-CSI-RS-ResourceSets)) OF NZP-CSI-RS-ResourceSet
                                                                                                                 OPTIONAL, -- Need N
    nzp-CSI-RS-ResourceSetToReleaseList SEQUENCE (SIZE (1..maxNrofNZP-CSI-RS-ResourceSets)) OF NZP-CSI-RS-ResourceSetId
                                                                                                                 OPTIONAL, -- Need N
    csi-IM-ResourceToAddModList         SEQUENCE (SIZE (1..maxNrofCSI-IM-Resources)) OF CSI-IM-Resource          OPTIONAL, -- Need N
    csi-IM-ResourceToReleaseList        SEQUENCE (SIZE (1..maxNrofCSI-IM-Resources)) OF CSI-IM-ResourceId        OPTIONAL, -- Need N
    csi-IM-ResourceSetToAddModList      SEQUENCE (SIZE (1..maxNrofCSI-IM-ResourceSets)) OF CSI-IM-ResourceSet    OPTIONAL, -- Need N
    csi-IM-ResourceSetToReleaseList     SEQUENCE (SIZE (1..maxNrofCSI-IM-ResourceSets)) OF CSI-IM-ResourceSetId  OPTIONAL, -- Need N
    csi-SSB-ResourceSetToAddModList     SEQUENCE (SIZE (1..maxNrofCSI-SSB-ResourceSets)) OF CSI-SSB-ResourceSet  OPTIONAL, -- Need N
    csi-SSB-ResourceSetToReleaseList    SEQUENCE (SIZE (1..maxNrofCSI-SSB-ResourceSets)) OF CSI-SSB-ResourceSetId OPTIONAL, -- Need N
    csi-ResourceConfigToAddModList      SEQUENCE (SIZE (1..maxNrofCSI-ResourceConfigurations)) OF CSI-ResourceConfig
                                                                                                                 OPTIONAL, -- Need N
    csi-ResourceConfigToReleaseList     SEQUENCE (SIZE (1..maxNrofCSI-ResourceConfigurations)) OF CSI-ResourceConfigId
                                                                                                                 OPTIONAL, -- Need N
    csi-ReportConfigToAddModList        SEQUENCE (SIZE (1..maxNrofCSI-ReportConfigurations)) OF CSI-ReportConfig  OPTIONAL, -- Need N
    csi-ReportConfigToReleaseList       SEQUENCE (SIZE (1..maxNrofCSI-ReportConfigurations)) OF CSI-ReportConfigId
                                                                                                                 OPTIONAL, -- Need N
    reportTriggerSize                   INTEGER (0..6)                                                           OPTIONAL, -- Need M
    aperiodicTriggerStateList           SetupRelease { CSI-AperiodicTriggerStateList }                           OPTIONAL, -- Need M
    semiPersistentOnPUSCH-TriggerStateList    SetupRelease { CSI-SemiPersistentOnPUSCH-TriggerStateList }        OPTIONAL, -- Need M
    ...
}
```

See 3GPP TS 38.331 V15.15.0.

5.2 UE procedure for reporting channel state information (CSI)

5.2.1 Channel state information framework

The time and frequency resources that can be used by the UE to report CSI are controlled by the gNB. CSI may consist of Channel Quality Indicator (CQI), precoding matrix indicator (PMI), CSI-RS resource indicator (CRI), SS/PBCH Block Resource indicator (SSBRI), layer indicator (LI), rank indicator (RI) and/or L1-RSRP.

See 3GPP TS 38.214 V15.14.0.

5.2.1.1 Reporting settings

Each Reporting Setting *CSI-ReportConfig* is associated with a single downlink BWP (indicated by higher layer parameter *BWP-Id*) given in the associated *CSI-ResourceConfig* for channel measurement and contains the parameter(s) for one CSI reporting band:codebook configuration including codebook subset restriction, time-domain behavior, frequency granularity for CQI and PMI, measurement restriction configurations, and the CSI-related quantities to be reported by the UE such as the layer indicator (LI), L1-RSRP, CRI, and SSBRI (SSB Resource Indicator).

The time domain behavior of the *CSI-ReportConfig* is indicated by the higher layer parameter *reportConfigType* and can be set to 'aperiodic', 'semiPersistentOnPUCCH', 'semiPersistentOnPUSCH', or 'periodic'. For periodic and semiPersistentOnPUCCH/semiPersistentOnPUSCH CSI reporting, the configured periodicity and slot offset applies in the numerology of the UL BWP in which the CSI report is configured to be transmitted on. The higher layer parameter *reportQuantity* indicates the CSI-related or L1-RSRP-related quantities to report. The *reportFreqConfiguration* indicates the reporting granularity in the frequency domain, including the CSI reporting band and if PMI/CQI reporting is wideband or sub-band. The *timeRestrictionForChannelMeasurements* parameter in *CSI-ReportConfig* can be configured to enable time domain restriction for channel measurements and *timeRestrictionForInterferenceMeasurements* can be configured to enable time domain restriction for interference measurements. The *CSI-ReportConfig* can also contain *CodebookConfig*, which contains configuration parameters for Type-I or Type II CSI including codebook subset restriction, and configurations of group based reporting.

See 3GPP TS 38.214 V15.14.0.

5.2.1.2 Resource settings

Each CSI Resource Setting *CSI-ResourceConfig* contains a configuration of a list of S≥1 CSI Resource Sets (given by higher layer parameter *csi-RS-ResourceSetList*), where the list is comprised of references to either or both of NZP CSI-RS resource set(s) and SS/PBCH block set(s) or the list is comprised of references to CSI-IM resource set(s). Each CSI Resource Setting is located in the DL BWP identified by the higher layer parameter *BWP-id*, and all CSI Resource Settings linked to a CSI Report Setting have the same DL BWP.

The time domain behavior of the CSI-RS resources within a CSI Resource Setting are indicated by the higher layer parameter *resourceType* and can be set to aperiodic, periodic, or semi-persistent. For periodic and semi-persistent CSI Resource Settings, the number of CSI-RS Resource Sets configured is limited to S=1. For periodic and semi-persistent CSI Resource Settings, the configured periodicity and slot offset is given in the numerology of its associated DL BWP, as given by *BWP-id*. When a UE is configured with multiple *CSI-ResourceConfigs* consisting the same NZP CSI-RS resource ID, the same time domain behavior shall be configured for the *CSI-ResourceConfigs*. When a UE is configured with multiple *CSI-ResourceConfigs* consisting the same CSI-IM resource ID, the same time-domain behavior shall be configured for the *CSI-ResourceConfigs*. All CSI Resource Settings linked to a CSI Report Setting shall have the same time domain behavior.

The following are configured via higher layer signaling for one or more CSI Resource Settings for channel and interference measurement:

- CSI-IM resource for interference measurement as described in clause 5.2.2.4.
- NZP CSI-RS resource for interference measurement as described in clause 5.2.2.3.1.
- NZP CSI-RS resource for channel measurement as described in clause 5.2.2.3.1.

See 3GPP TS 38.214 V15.14.0.

7.4.1.5 CSI reference signals

7.4.1.5.1 General

Zero-power (ZP) and non-zero-power (NZP) CSI-RS are defined

- for a non-zero-power CSI-RS configured by the *NZP-CSI-RS-Resource* IE or by the *CSI-RS-Resource-Mobility* field in the *CSI-RS-ResourceConfigMobility* IE, the sequence shall be generated according to clause 7.4.1.5.2 and mapped to resource elements according to clause 7.4.1.5.3
- for a zero-power CSI-RS configured by the *ZP-CSI-RS-Resource* IE, the UE shall assume that the resource elements defined in clause 7.4.1.5.3 are not used for PDSCH transmission subject to clause 5.1.4.2 of [6, TS 38.214]. The UE performs the same measurement/reception on channels/signals except PDSCH regardless of whether they collide with ZP CSI-RS or not.

See 3GPP TS 38.211 V15.9.0.

19. Claim 9 of the '780 Patent recites that the "controller" is configured to "determine a type of the received interference from among a plurality of interference types comprising wideband interference, self interference, and narrowband interference based upon comparing at least one characteristic of a current received signal with the short term and long term historical characteristics of interference." The Accused Products each comprise a controller configured to determine a type of the received interference from among a plurality of interference types comprising wideband interference, self interference, and narrowband interference based upon comparing at least one characteristic of a current received signal with the short term and long term

historical characteristics of interference. For example, the channel state information – reference signal ("CSI-RS") and channel state information – interference measurement ("CSI-IM") resource sets may be specified across the entire bandwidth-part or just a part of the bandwidth that the UE is configured to receive:

> **8.1.2: Frequency-Domain Structure of CSI-RS Configurations**
>
> A CSI-RS is configured for a given downlink bandwidth part and is then assumed to be confined within that bandwidth part and use the numerology of the bandwidth part.
>
> The CSI-RS can be configured to cover the full bandwidth of the bandwidth part or just a fraction of the bandwidth. In the latter case, the CSI-RS bandwidth and frequency-domain starting position are provided as part of the CSI-RS configuration.
>
> Within the configured CSI-RS bandwidth, a CSI-RS may be configured for transmission in every resource block, referred to as *CSI-RS density equal to one*. However, a CSI-RS may also be configured for transmission only in every second resource block, referred to as CSI-RS density equal to 1/2. In the latter case, the CSI-RS configuration includes information about the set of resource blocks (odd resource blocks or even resource blocks) within which the CSI-RS will be transmitted. CSI-RS density equal to 1/2 is not supported for CSI-RS with 4, 8, and 12 antenna ports.

See Erik Dahlman et al., 5G NR: The Next Generation Wireless Access Technology, § 8.1.2 (2d Ed. 2018).

★ The parameter structure used to configure a CSI IM Resource is presented in Table 125. This parameter structure includes a CSI IM Resource identity and a specification of the resources which are allocated to the CSI IM Resource. There is a choice of configuring either pattern 0 or pattern 1:

- Pattern 0 corresponds to a 2×2 grid of Resource Elements. *subcarrierLocation-p0* and *symbolLocation-p0* specify the first subcarrier and first symbol belonging to the 2×2 grid
- Pattern 1 corresponds to a 4×1 grid of Resource Elements (4 subcarriers × 1 symbol). *subcarrierLocation-p1* and *symbolLocation-p1* specify the first subcarrier and the only symbol belonging to the 4×1 grid

Examples of patterns 0 and 1 are illustrated in Figure 199

CSI-IM-Resource						
csi-IM-ResourceId	0 to 31					
csi-IM-ResourceElementPattern	CHOICE					
	pattern0			pattern1		
	subcarrierLocation-p0	0, 2, 4, 6, 8 10		subcarrierLocation-p1	0, 4, 8	
	symbolLocation-p0	0 to 12		symbolLocation-p1	0 to 13	
freqBand	startingRB	0 to 274, step 4				
	nrofRBs	24 to 276, step 4				
periodicityAndOffset	CHOICE					
	4 slots	0 to 3	20 slots	0 to 19	160 slots	0 to 159
	5 slots	0 to 4	32 slots	0 to 31	320 slots	0 to 319
	8 slots	0 to 7	40 slots	0 to 39	640 slots	0 to 639
	10 slots	0 to 9	64 slots	0 to 63		
	16 slots	0 to 15	80 slots	0 to 79		

Table 125 – Parameter structure used to configure a CSI IM Resource

★ The *freqBand* section of the parameter structure specifies the set of contiguous Resource Blocks across which the CSI IM Resource is configured. The *startingRB* is relative to Common Resource Block 0, i.e. the lower edge of the channel bandwidth, rather than the lower edge of the Bandwidth Part. The *nrofRBs* information element has a minimum value of 24 but if the Bandwidth Part occupies less than 24 Resource Blocks then the CSI IM Resource occupies only the Resource Blocks within the Bandwidth Part

See Chris Johnson, 5G New Radio in Bullets, Section 3.7.4. (2019).

– *NZP-CSI-RS-Resource*

The IE *NZP-CSI-RS-Resource* is used to configure Non-Zero-Power (NZP) CSI-RS transmitted in the cell where the IE is included, which the UE may be configured to measure on (see TS 38.214 [19], clause 5.2.2.3.1). A change of configuration between periodic, semi-persistent or aperiodic for an *NZP-CSI-RS-Resource* is not supported without a release and add.

***NZP-CSI-RS-Resource* information element**

```
-- ASN1START
-- TAG-NZP-CSI-RS-RESOURCE-START

NZP-CSI-RS-Resource ::=             SEQUENCE {
    nzp-CSI-RS-ResourceId               NZP-CSI-RS-ResourceId,
    resourceMapping                     CSI-RS-ResourceMapping,
    powerControlOffset                  INTEGER (-8..15),
    powerControlOffsetSS                ENUMERATED{db-3, db0, db3, db6}                 OPTIONAL,   -- Need R
    scramblingID                        ScramblingId,
    periodicityAndOffset                CSI-ResourcePeriodicityAndOffset                OPTIONAL,   -- Cond PeriodicOrSemiPersistent
    qcl-InfoPeriodicCSI-RS              TCI-StateId                                     OPTIONAL,   -- Cond Periodic
    ...
}
```

See 3GPP TS 38.331 V 15.15.0.

– *CSI-IM-Resource*

The IE *CSI-IM-Resource* is used to configure one CSI Interference Management (IM) resource.

***CSI-IM-Resource* information element**

```
-- ASN1START
-- TAG-CSI-IM-RESOURCE-START

CSI-IM-Resource ::=                 SEQUENCE {
    csi-IM-ResourceId                   CSI-IM-ResourceId,
    csi-IM-ResourceElementPattern           CHOICE {
        pattern0                                SEQUENCE {
            subcarrierLocation-p0                   ENUMERATED { s0, s2, s4, s6, s8, s10 },
            symbolLocation-p0                       INTEGER (0..12)
        },
        pattern1                                SEQUENCE {
            subcarrierLocation-p1                   ENUMERATED { s0, s4, s8 },
            symbolLocation-p1                       INTEGER (0..13)
        }
    }                                                                       OPTIONAL,   -- Need M
    freqBand                            CSI-FrequencyOccupation             OPTIONAL,   -- Need M
    periodicityAndOffset                CSI-ResourcePeriodicityAndOffset    OPTIONAL,   -- Cond PeriodicOrSemiPersistent
    ...
}
```

See 3GPP TS 38.331 V 15.15.0.

5.2.2.3.1 NZP CSI-RS

The UE can be configured with one or more NZP CSI-RS resource set configuration(s) as indicated by the higher layer parameters *CSI-ResourceConfig,* and *NZP-CSI-RS-ResourceSet.* Each NZP CSI-RS resource set consists of $K \geq 1$ NZP CSI-RS resource(s).

The following parameters for which the UE shall assume non-zero transmission power for CSI-RS resource are configured via the higher layer parameter *NZP-CSI-RS-Resource, CSI-ResourceConfig* and *NZP-CSI-RS-ResourceSet* for each CSI-RS resource configuration:

- *nzp-CSI-RS-ResourceId* determines CSI-RS resource configuration identity.
- *periodicityAndOffset* defines the CSI-RS periodicity and slot offset for periodic/semi-persistent CSI-RS. All the CSI-RS resources within one set are configured with the same periodicity, while the slot offset can be same or different for different CSI-RS resources.
- *resourceMapping* defines the number of ports, CDM-type, and OFDM symbol and subcarrier occupancy of the CSI-RS resource within a slot that are given in clause 7.4.1.5 of [4, TS 38.211].
- *nrofPorts* in *resourceMapping* defines the number of CSI-RS ports, where the allowable values are given in clause 7.4.1.5 of [4, TS 38.211].
- *density* in *resourceMapping* defines CSI-RS frequency density of each CSI-RS port per PRB, and CSI-RS PRB offset in case of the density value of 1/2, where the allowable values are given in clause 7.4.1.5 of [4, TS 38.211]. For density 1/2, the odd/even PRB allocation indicated in *density* is with respect to the common resource block grid.
- *cdm-Type* in *resourceMapping* defines CDM values and pattern, where the allowable values are given in clause 7.4.1.5 of [4, TS 38.211].
- *powerControlOffset*: which is the assumed ratio of PDSCH EPRE to NZP CSI-RS EPRE when UE derives CSI feedback and takes values in the range of [-8, 15] dB with 1 dB step size.
- *powerControlOffsetSS*: which is the assumed ratio of NZP CSI-RS EPRE to SS/PBCH block EPRE.
- *scramblingID* defines scrambling ID of CSI-RS with length of 10 bits.
- *BWP-Id* in *CSI-ResourceConfig* defines which bandwidth part the configured CSI-RS is located in.
- *repetition* in *NZP-CSI-RS-ResourceSet* is associated with a CSI-RS resource set and defines whether UE can assume the CSI-RS resources within the NZP CSI-RS Resource Set are transmitted with the same downlink spatial domain transmission filter or not as described in clause 5.1.6.1.2. and can be configured only when the higher layer parameter *reportQuantity* associated with all the reporting settings linked with the CSI-RS resource set is set to 'cri-RSRP' or 'none'.
- *qcl-InfoPeriodicCSI-RS* contains a reference to a *TCI-State* indicating QCL source RS(s) and QCL type(s). If the *TCI-State* is configured with a reference to an RS with 'QCL-TypeD' association, that RS may be an SS/PBCH block located in the same or different CC/DL BWP or a CSI-RS resource configured as periodic located in the same or different CC/DL BWP.
- *trs-Info* in *NZP-CSI-RS-ResourceSet* is associated with a CSI-RS resource set and for which the UE can assume that the antenna port with the same port index of the configured NZP CSI-RS resources in the *NZP-CSI-RS-ResourceSet* is the same as described in clause 5.1.6.1.1 and can be configured when reporting setting is not configured or when the higher layer parameter *reportQuantity* associated with all the reporting settings linked with the CSI-RS resource set is set to 'none'.

See 3GPP TS 38.214 V15.14.0.

All CSI-RS resources within one set are configured with same *density* and same *nrofPorts*, except for the NZP CSI-RS resources used for interference measurement.

The UE expects that all the CSI-RS resources of a resource set are configured with the same starting RB and number of RBs and the same *cdm-type*.

The bandwidth and initial common resource block (CRB) index of a CSI-RS resource within a BWP, as defined in clause 7.4.1.5 of [4, TS 38.211], are determined based on the higher layer parameters *nrofRBs* and *startingRB*, respectively, within the CSI-FrequencyOccupation IE configured by the higher layer parameter *freqBand* within the *CSI-RS-ResourceMapping* IE. Both *nrofRBs* and *startingRB* are configured as integer multiples of 4 RBs, and the reference point for *startingRB* is CRB 0 on the common resource block grid. If $startingRB < N_{BWP}^{start}$, the UE shall assume that the initial CRB index of the CSI-RS resource is $N_{initial\ RB} = N_{BWP}^{start}$, otherwise $N_{initial\ RB} = startingRB$. If $nrofRBs > N_{BWP}^{size} + N_{BWP}^{start} - N_{initial\ RB}$, the UE shall assume that the bandwidth of the CSI-RS resource is $N_{CSI-RS}^{BW} = N_{BWP}^{size} + N_{BWP}^{start} - N_{initial\ RB}$, otherwise $N_{CSI-RS}^{BW} = nrofRBs$. In all cases, the UE shall expect that $N_{CSI-RS}^{BW} \geq \min(24, N_{BWP}^{size})$.

See 3GPP TS 38.214 V15.14.0.

5.2.2.4 Channel State Information – Interference Measurement (CSI-IM)

The UE can be configured with one or more CSI-IM resource set configuration(s) as indicated by the higher layer parameter *CSI-IM-ResourceSet*. Each CSI-IM resource set consists of $K \geq 1$ CSI-IM resource(s).

The following parameters are configured via higher layer parameter *CSI-IM-Resource* for each CSI-IM resource configuration:

- *csi-IM-ResourceId* determines CSI-IM resource configuration identity
- *subcarrierLocation-p0* or *subcarrierLocation-p1* defines subcarrier occupancy of the CSI-IM resource within a slot for *csi-IM-ResourceElementPattern* set to 'pattern0' or 'pattern1', respectively.
- *symbolLocation-p0* or *symbolLocation-p1* defines OFDM symbol location of the CSI-IM resource within a slot for *csi-IM-ResourceElementPattern* set to 'pattern0' or 'pattern1', respectively.
- *periodicityAndOffset* defines the CSI-IM periodicity and slot offset for periodic/semi-persistent CSI-IM.
- *freqBand* includes parameters to enable configuration of frequency-occupancy of CSI-IM

In each of the PRBs configured by *freqBand*, the UE shall assume each CSI-IM resource is located in,

- resource elements (k_{CSI-IM}, l_{CSI-IM}), $(k_{CSI-IM}, l_{CSI-IM}+1)$, $(k_{CSI-IM}+1, l_{CSI-IM})$ and $(k_{CSI-IM}+1, l_{CSI-IM}+1)$, if *csi-IM-ResourceElementPattern* is set to 'pattern0',
- resource elements (k_{CSI-IM}, l_{CSI-IM}), $(k_{CSI-IM}+1, l_{CSI-IM})$, $(k_{CSI-IM}+2, l_{CSI-IM})$ and $(k_{CSI-IM}+3, l_{CSI-IM})$ if *csi-IM-ResourceElementPattern* is set to 'pattern1',

where k_{CSI-IM} and l_{CSI-IM} are the configured frequency-domain location and time-domain location, respectively, given by the higher layer parameters in the above list.

See 3GPP TS 38.214 V15.14.0.

For example, channel measurements such as CQI are based upon either multiple in time or single time readings.

5.2.2 Channel state information

5.2.2.1 Channel quality indicator (CQI)

The CQI indices and their interpretations are given in Table 5.2.2.1-2 or Table 5.2.2.1-4 for reporting CQI based on QPSK, 16QAM and 64QAM. The CQI indices and their interpretations are given in Table 5.2.2.1-3 for reporting CQI based on QPSK, 16QAM, 64QAM and 256QAM.

Based on an unrestricted observation interval in time unless specified otherwise in this clause, and an unrestricted observation interval in frequency, the UE shall derive for each CQI value reported in uplink slot *n* the highest CQI index which satisfies the following condition:

- A single PDSCH transport block with a combination of modulation scheme, target code rate and transport block size corresponding to the CQI index, and occupying a group of downlink physical resource blocks termed the CSI reference resource, could be received with a transport block error probability not exceeding:
  - 0.1, if the higher layer parameter *cqi-Table* in *CSI-ReportConfig* configures 'table1' (corresponding to Table 5.2.2.1-2), or 'table2' (corresponding to Table 5.2.2.1-3), or
  - 0.00001, if the higher layer parameter *cqi-Table* in *CSI-ReportConfig* configures 'table3' (corresponding to Table 5.2.2.1-4).

If higher layer parameter *timeRestrictionForChannelMeasurements* is set to "*notConfigured*", the UE shall derive the channel measurements for computing CSI value reported in uplink slot n based on only the NZP CSI-RS, no later than the CSI reference resource, (defined in TS 38.211[4]) associated with the CSI resource setting.

If higher layer parameter *timeRestrictionForChannelMeasurements* in *CSI-ReportConfig* is set to "*Configured*", the UE shall derive the channel measurements for computing CSI reported in uplink slot n based on only the most recent, no later than the CSI reference resource, occasion of NZP CSI-RS (defined in [4, TS 38.211]) associated with the CSI resource setting.

If higher layer parameter *timeRestrictionForInterferenceMeasurements* is set to "*notConfigured*", the UE shall derive the interference measurements for computing CSI value reported in uplink slot n based on only the CSI-IM and/or NZP CSI-RS for interference measurement no later than the CSI reference resource associated with the CSI resource setting.

If higher layer parameter *timeRestrictionForInterferenceMeasurements* in *CSI-ReportConfig* is set to "*Configured*", the UE shall derive the interference measurements for computing the CSI value reported in uplink slot n based on the most recent, no later than the CSI reference resource, occasion of CSI-IM and/or NZP CSI-RS for interference measurement (defined in [4, TS 38.211]) associated with the CSI resource setting.

See 3GPP TS 38.214 §5.2.2.1.

For example, rank indicator ("RI") and pre-coding matrix indicator ("PMI") are also computed based on SRS measurements.

> To select a suitable rank and a corresponding precoder matrix, the network needs estimates of the channels between the device antenna ports and the corresponding network receive antennas. To enable this, a device configured for codebook-based PUSCH would typically be configured for transmission of at least one multi-port SRS. Based on measurements on the configured SRS, the network can sound the channel and determine a suitable rank and precoder matrix.

See Erik Dahlman et al., 5G NR: The Next Generation Wireless Access Technology, § 11.3.1 (2d Ed. 2018).

20. Claim 9 of the '780 Patent recites that the "controller" is configured to "set the at least one settable link characteristic to compensate for the received interference based upon the interference type." The Accused Products each comprise a controller configured to set the at least one settable link characteristic to compensate for the received interference based upon the interference type. For example, the Accused Products report at least wideband and subband CQI, wideband and subband PMI, and also RI:

> - wideband CQI or subband CQI reporting, as configured by the higher layer parameter *cqi-FormatIndicator*. When wideband CQI reporting is configured, a wideband CQI is reported for each codeword for the entire CSI reporting band. When subband CQI reporting is configured, one CQI for each codeword is reported for each subband in the CSI reporting band.

See 3GPP TS 38.214 V.15.14.0 §5.2.1.4.

> wideband PMI or subband PMI reporting as configured by the higher layer parameter *pmi-FormatIndicator*. When wideband PMI reporting is configured, a wideband PMI is reported for the entire CSI reporting band. When subband PMI reporting is configured, except with 2 antenna ports, a single wideband indication (i_1 in clause 5.2.2.2) is reported for the entire CSI reporting band and one subband indication (i_2 in clause 5.2.2.2) is reported for each subband in the CSI reporting band. When subband PMIs are configured with 2 antenna ports, a PMI is reported for each subband in the CSI reporting band.

See 3GPP TS 38.214 V.15.14.0 §5.2.1.4.

5.2.2.1 Channel quality indicator (CQI)

The CQI indices and their interpretations are given in Table 5.2.2.1-2 or Table 5.2.2.1-4 for reporting CQI based on QPSK, 16QAM and 64QAM. The CQI indices and their interpretations are given in Table 5.2.2.1-3 for reporting CQI based on QPSK, 16QAM, 64QAM and 256QAM.

Based on an unrestricted observation interval in time unless specified otherwise in this clause, and an unrestricted observation interval in frequency, the UE shall derive for each CQI value reported in uplink slot *n* the highest CQI index which satisfies the following condition:

- A single PDSCH transport block with a combination of modulation scheme, target code rate and transport block size corresponding to the CQI index, and occupying a group of downlink physical resource blocks termed the CSI reference resource, could be received with a transport block error probability not exceeding:
  - 0.1, if the higher layer parameter *cqi-Table* in *CSI-ReportConfig* configures 'table1' (corresponding to Table 5.2.2.1-2), or 'table2' (corresponding to Table 5.2.2.1-3), or
  - 0.00001, if the higher layer parameter *cqi-Table* in *CSI-ReportConfig* configures 'table3' (corresponding to Table 5.2.2.1-4).

If higher layer parameter *timeRestrictionForChannelMeasurements* is set to "*notConfigured*", the UE shall derive the channel measurements for computing CSI value reported in uplink slot n based on only the NZP CSI-RS, no later than the CSI reference resource, (defined in TS 38.211[4]) associated with the CSI resource setting.

If higher layer parameter *timeRestrictionForChannelMeasurements* in *CSI-ReportConfig* is set to "*Configured*", the UE shall derive the channel measurements for computing CSI reported in uplink slot n based on only the most recent, no later than the CSI reference resource, occasion of NZP CSI-RS (defined in [4, TS 38.211]) associated with the CSI resource setting.

If higher layer parameter *timeRestrictionForInterferenceMeasurements* is set to "*notConfigured*", the UE shall derive the interference measurements for computing CSI value reported in uplink slot n based on only the CSI-IM and/or NZP CSI-RS for interference measurement no later than the CSI reference resource associated with the CSI resource setting.

See 3GPP TS 38.214 V.15.14.0.

The bitwidth for RI/LI/CQI/CRI of *codebookType=typeI-SinglePanel* is provided in Tables 6.3.1.1.2-3.

Table 6.3.1.1.2-3: RI, LI, CQI, and CRI of *codebookType=typeI-SinglePanel*

Field	Bitwidth				
	1 antenna port	2 antenna ports	4 antenna ports	>4 antenna ports	
				Rank1~4	Rank5~8
Rank Indicator	0	$\min(1,\lceil \log_2 n_{RI} \rceil)$	$\min(2,\lceil \log_2 n_{RI} \rceil)$	$\lceil \log_2 n_{RI} \rceil$	$\lceil \log_2 n_{RI} \rceil$
Layer Indicator	0	$\lceil \log_2 \upsilon \rceil$	$\min(2,\lceil \log_2 \upsilon \rceil)$	$\min(2,\lceil \log_2 \upsilon \rceil)$	$\min(2,\lceil \log_2 \upsilon \rceil)$
Wide-band CQI for the first TB	4	4	4	4	4
Wideband CQI for the second TB	0	0	0	0	4
Subband differential CQI for the first TB	2	2	2	2	2
Subband differential CQI for the second TB	0	0	0	0	2
CRI	$\lceil \log_2(K_s^{CSI-RS}) \rceil$	$\lceil \log_2(K_s^{CSI-RS}) \rceil$	$\lceil \log_2(K_s^{CSI-RS}) \rceil$	$\lceil \log_2(K_s^{CSI-RS}) \rceil$	$\lceil \log_2(K_s^{CSI-RS}) \rceil$

n_{RI} in Table 6.3.1.1.2-3 is the number of allowed rank indicator values according to Clause 5.2.2.2.1 [6, TS 38.214].

υ is the value of the rank. The value of K_s^{CSI-RS} is the number of CSI-RS resources in the corresponding resource set.

The values of the rank indicator field are mapped to allowed rank indicator values with increasing order, where '0' is mapped to the smallest allowed rank indicator value.

See 3GPP TS 38.212 V15.12.0 §6.3.1.1.2.

21. Apple also knowingly and intentionally induces infringement of one or more claims of the '780 Patent in violation of 35 U.S.C. § 271(b). At least as of the filing and service of this amended complaint, Apple has knowledge of the '780 Patent and the infringing nature of the Accused Products. For example, Apple obtained knowledge of the '780 Patent at least as of January 21, 2022 when it was served with the initial complaint. Dkt. No. 6. Despite this knowledge of the '780 Patent, Apple continues to actively encourage and instruct its customers and end users (for example, through user manuals and online instruction materials on its website) to use the Accused Products in ways that directly infringe the '780 Patent, for example by utilizing the accused 5G functionality on the Accused Products in an infringing manner. *See, e.g.*, https://support.apple.com/en-gb/guide/iphone/iph3dd5f213/15.0/ios/15.0 (Apple iPhone 13 User Manual – "View or change cellular data settings on iPhone"). Further, Apple advertises to customers that "[n]o one does 5G like iPhone." https://www.apple.com/iphone-13/. Apple provides these instructions and online materials to customers and end users knowing and intending (or with willful blindness to the fact) that its customers and end users will commit these infringing acts. Apple also continues to make, use, offer for sale, sell, and/or import the Accused Products, despite its knowledge of the '780 Patent, thereby specifically intending for and inducing its customers to infringe the '780 Patent through the customers' normal and customary use of the Accused Products.

22. Apple has also infringed, and continues to infringe, one or more claims of the '780 Patent by selling, offering for sale, or importing into the United States, the Accused Products, knowing that the Accused Products constitute a material part of the inventions claimed in the '780 Patent, are especially made or adapted to infringe the '780 Patent, and are not staple articles or

commodities of commerce suitable for non-infringing use (as exemplified by the materials cited above). At least as of the filing and service of this amended complaint, Apple has knowledge of the '780 Patent and the infringing nature of the Accused Products. Apple has been, and currently is, contributorily infringing the '780 Patent in violation of 35 U.S.C. §§ 271(c) and (f).

23. By making, using, offering for sale, selling and/or importing into the United States the Accused Products, Apple has injured Plaintiff and is liable for infringement of the '780 Patent pursuant to 35 U.S.C. § 271.

24. As a result of Apple's direct infringement of the '780 Patent, Plaintiff is entitled to monetary damages (past, present, and future) in an amount adequate to compensate for Apple's infringement, but in no event less than a reasonable royalty for the use made of the invention by Apple, together with interest and costs as fixed by the Court.

25. As a result of Apple's indirect infringement of the '780 Patent (induced and contributory), Plaintiff is entitled to monetary damages (present and future) in an amount adequate to compensate for Apple's infringement, but in no event less than a reasonable royalty for the use made of the invention by Apple, together with interest and costs as fixed by the Court.

COUNT II

INFRINGEMENT OF U.S. PATENT NO. 7,110,779

26. Plaintiff realleges and incorporates by reference the foregoing paragraphs as if fully set forth herein.

27. Apple has been and is now directly infringing the '779 Patent, literally and/or under the doctrine of equivalents, in violation of 35 U.S.C. § 271(a), including by making, using, selling, and/or offering for sale in the United States or importing into the United States infringing products and systems, including at least the Accused Products identified above. The Accused Products

satisfy all of the claim limitations of one or more claims of the '779 Patent, including but not limited to claim 18.

28. Claim 18 of the '779 Patent recites "[a] wireless device locator for locating a target wireless communications device having a unique identifier (UID) associated therewith." To the extent the preamble is limiting, the Accused Products each comprise a wireless device locator for locating a target wireless communications device having a unique identifier (UID) associated therewith. For example, the accused Apple iPhone 13 supports ultra-wideband functionality for locating a target wireless communications device, such as the Apple AirTag:

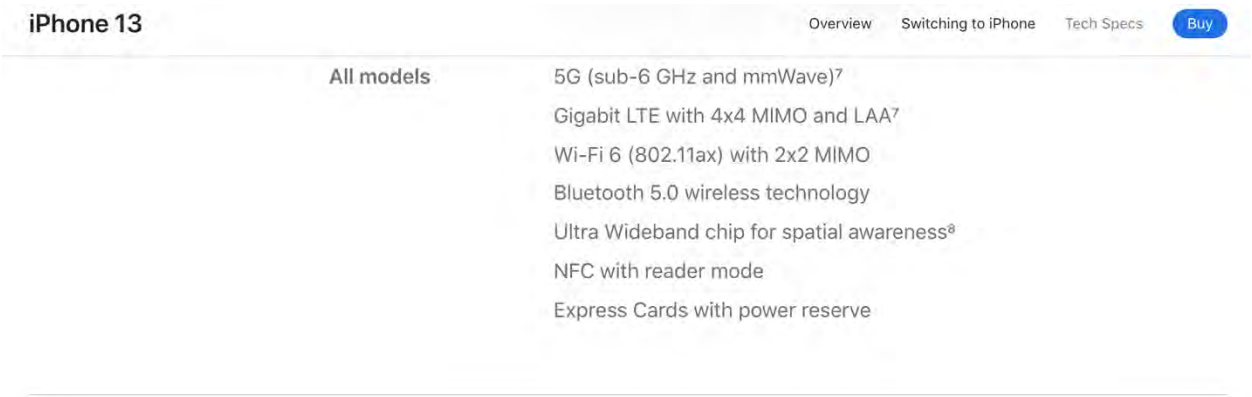

See https://www.apple.com/iphone-13/specs/.

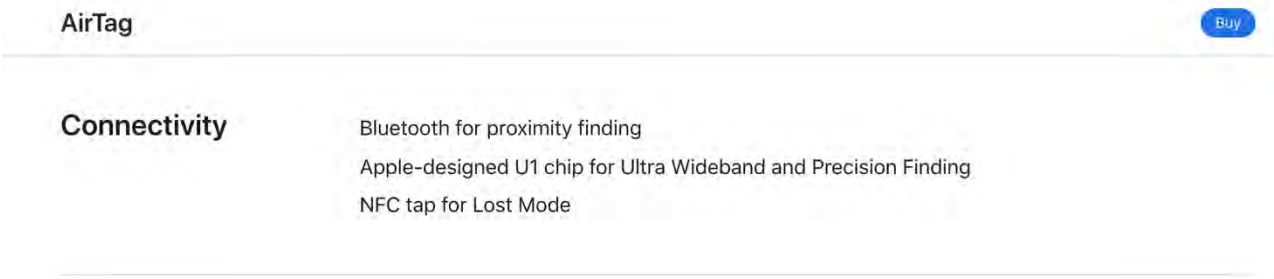

See https://www.apple.com/airtag/?afid=p238%7Cs43Yu6bTM-dc_mtid_1870765e38482_pcrid_573879837530_pgrid_120928559493_&cid=aos-us-kwgo-btb--slid---product-.

29. Claim 18 of the '779 Patent recites "at least one antenna and a transceiver connected thereto." The Accused Products comprise at least one antenna and a transceiver connected thereto. For example, the iPhone 13 comprises at least one antenna and a transceiver:

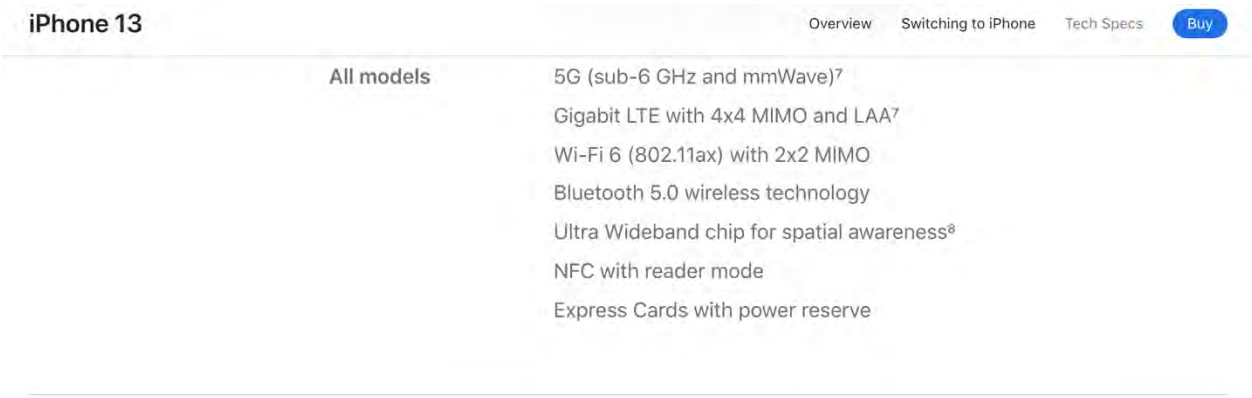

See https://www.apple.com/iphone-13/specs/.

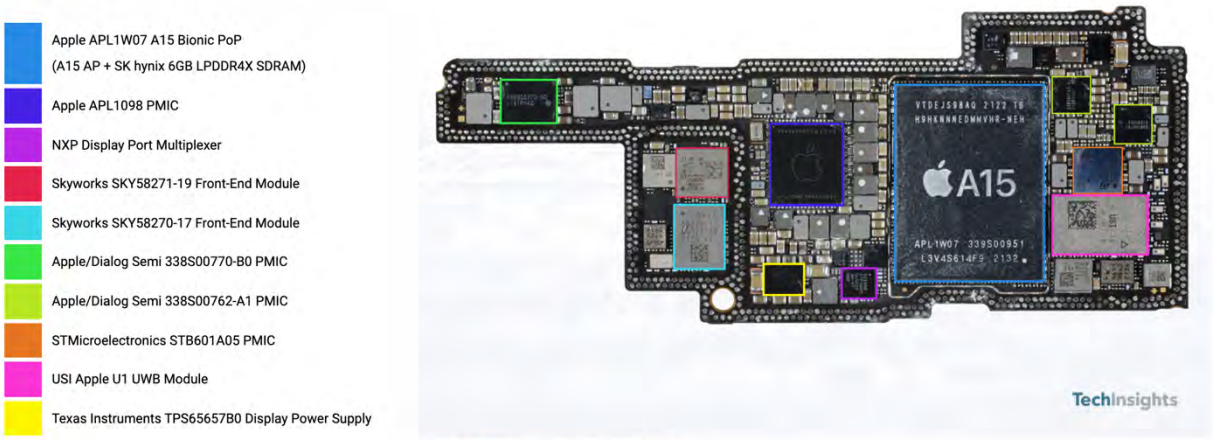

Figure 1. Apple iPhone Pro Board Shot

See https://www.techinsights.com/blog/teardown/apple-iphone-13-pro-teardown.

30. Claim 18 of the '779 Patent recites "a controller for" "cooperating with said transceiver for transmitting a plurality of location finding signals to the target wireless communications device, inserting the UID for the target wireless communications device in each of the location finding signals, and receiving a respective reply signal for each of said location finding signals generated by the target wireless communications device based upon the UID in the

location finding signals." The Accused Products comprise a controller for cooperating with said transceiver for transmitting a plurality of location finding signals to the target wireless communications device, inserting the UID for the target wireless communications device in each of the location finding signals, and receiving a respective reply signal for each of said location finding signals generated by the target wireless communications device based upon the UID in the location finding signals. For example, on information and belief, the iPhone 13 comprises a controller that cooperates with a transceiver and includes a UID for the target wireless communications device (such as an Apple AirTag) in location finding signals:

See https://www.apple.com/airtag/?afid=p238%7Cs43Yu6bTM-dc_mtid_1870765e38482_pcrid_573879837530_pgrid_120928559493_&cid=aos-us-kwgo-btb--slid---product-.

Use Precision Finding to pinpoint the location of your item

If you have a supported iPhone model with Ultra Wideband and your AirTag is nearby[1], you can use Precision Finding to help find it, even if it's stuck between couch cushions or hiding under a stack of mail. If your AirTag is out of range of your connected device, get directions to it first.

1. Open the Find My app, then tap the Items tab.
2. Choose the AirTag you want to locate, then tap Find. [1]
3. Follow the onscreen instructions and move around the space until your iPhone connects to your AirTag.
4. Your iPhone displays the distance and direction to your AirTag. Use that information to get closer to your AirTag until you find your lost item.
5. Tap the X button when you're done.

If you need more help

You can tap the sound button to play a sound on your AirTag if it's within Bluetooth range of your connected device. If it's too dark, a flashlight button will appear. To turn on the flashlight, tap it.

If you don't see Find, make sure that you turned on Location Access for the Find My app.

1. Go to Settings > Privacy > Location Services, and check that Location Services is on.
2. Scroll down and tap Find My.
3. Check "Ask Next Time," "While Using the App," or "While Using the App or Widgets." For the most accurate location, turn on Precise Location.

See https://support.apple.com/en-us/HT210967.

7.2 General MAC frame format

7.2.1 General

The general MAC frame for Frame Type values other than fragment and extended, as defined in Table 7-1, shall be formatted as illustrated in Figure 7-1.

Octets: 1/2	0/1	0/2	0/2/8	0/2	0/2/8	variable	variable		variable	2/4
Frame Control	Sequence Number	Destination PAN ID	Destination Address	Source PAN ID	Source Address	Auxiliary Security Header	IE		Frame Payload	FCS
		Addressing fields					Header IEs	Payload IEs		
MHR								MAC Payload		MFR

Figure 7-1—General MAC frame format

See IEEE 802.15.4z-2020 - IEEE Standard for Low-Rate Wireless Networks—Amendment 1: Enhanced Ultra Wideband (UWB) Physical Layers (PHYs) and Associated Ranging Techniques at Section 7.2.1.

31. Claim 18 of the '779 Patent recites a "controller for" "determining a propagation delay associated with the transmission of each location finding signal and the respective reply signal therefor based upon a known device latency of the target wireless communications device." The Accused Products comprise a controller for determining a propagation delay associated with the transmission of each location finding signal and the respective reply signal therefor based upon a known device latency of the target wireless communications device. For example, the Apple iPhone 13 comprises a controller for determining a propagation delay associated with the transmission of each location finding signal and the respective reply signal therefor based upon a known device latency of the target wireless communications device (such as an Apple AirTag):

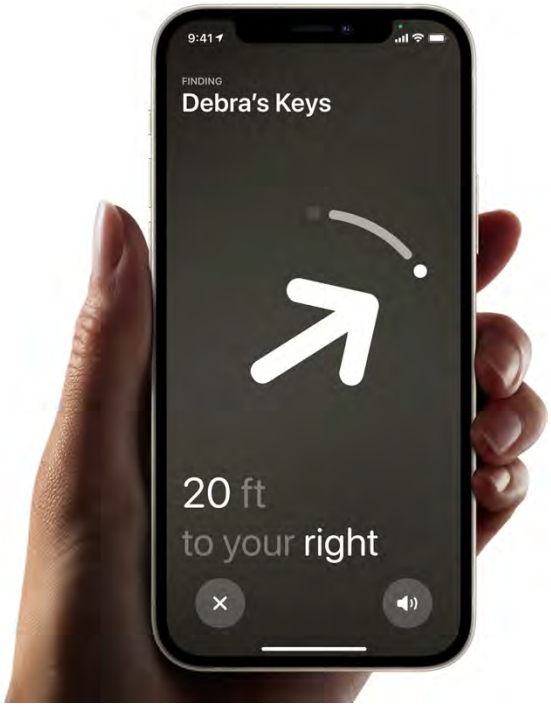

Cold. Warm. Warmer. Hot.

If your AirTag is nearby, your iPhone can lead you straight to it with Precision Finding.[1] You'll see the distance to your AirTag and the direction to head in — all thanks to Ultra Wideband technology.

Precision Finding compatible with:

iPhone 11
iPhone 11 Pro and iPhone 11 Pro Max
iPhone 12 and iPhone 12 mini
iPhone 12 Pro and iPhone 12 Pro Max
iPhone 13 and iPhone 13 mini
iPhone 13 Pro and iPhone 13 Pro Max

See https://www.apple.com/airtag/?afid=p238%7Cs43Yu6bTM-dc_mtid_1870765e38482_pcrid_573879837530_pgrid_120928559493_&cid=aos-us-kwgo-btb--slid---product-.

Use Precision Finding to pinpoint the location of your item

If you have a supported iPhone model with Ultra Wideband and your AirTag is nearby[1], you can use Precision Finding to help find it, even if it's stuck between couch cushions or hiding under a stack of mail. If your AirTag is out of range of your connected device, get directions to it first.

1. Open the Find My app, then tap the Items tab.
2. Choose the AirTag you want to locate, then tap Find. [1]
3. Follow the onscreen instructions and move around the space until your iPhone connects to your AirTag.
4. Your iPhone displays the distance and direction to your AirTag. Use that information to get closer to your AirTag until you find your lost item.
5. Tap the X button when you're done.

If you need more help

You can tap the sound button to play a sound on your AirTag if it's within Bluetooth range of your connected device. If it's too dark, a flashlight button will appear. To turn on the flashlight, tap it.

If you don't see Find, make sure that you turned on Location Access for the Find My app.

1. Go to Settings > Privacy > Location Services, and check that Location Services is on.
2. Scroll down and tap Find My.
3. Check "Ask Next Time," "While Using the App," or "While Using the App or Widgets." For the most accurate location, turn on Precise Location.

See https://support.apple.com/en-us/HT210967.

6.9.1.2.2 Single-sided two-way ranging (SS-TWR)

SS-TWR involves a measurement of the round-trip delay of a single message from one device to another and a response sent back to the original device. The operation of SS-TWR is as shown in Figure 6-47a, where device A initiates the exchange and device B responds to complete the exchange and T_{prop} is the propagation time of the RMARKER between the devices.

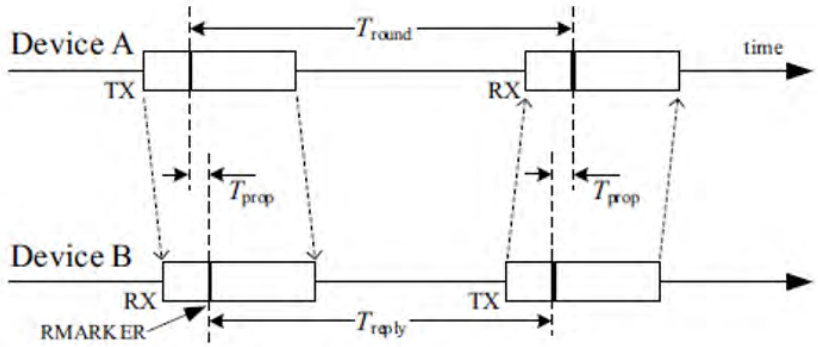

Figure 6-47a—SS-TWR

Each device precisely measures the transmission and reception times of the message frames, and so can calculate times T_{round} and T_{reply} by simple subtraction. Hence, the resultant TOF may be estimated as $\hat{T}_{prop}$ by the equation:

$$\hat{T}_{prop} = \frac{1}{2}(T_{round} - T_{reply})$$

* * *

When employing SS-TWR, for the TOF to be calculated at device A, device A needs the reply time T_{reply} employed by device B. When T_{reply} is determined by device B after its transmission, an additional message is necessary to bring this value to device A, as shown in Figure 6-48a and described in 6.9.6.3. When T_{reply} can be accurately predicted by device B before its transmission, the value can be embedded in the reply message itself, as shown in Figure 6-48b and described in 6.9.6.4. Alternatively, if device B has the ability to always reply with sufficiently accurate constant or pre-known reply time, it obviates the need for any transfer of T_{reply} as part of the ranging exchange, as described in 6.9.6.5.

* * *

6.9.1.2.3 Double-sided two-way ranging (DS-TWR)

DS-TWR is an extension of SS-TWR in which two round-trip time measurements are used and combined to give the TOF result with a reduced error in the presence of uncorrected clock frequency offset even for quite long response delays. The operation of DS-TWR is shown in Figure 6-47b, where device A initiates the first round-trip time measurement to which device B responds, after which device B initiates the second round-trip time measurement to which device A responds completing the full DS-TWR exchange and T_{prop} is the propagation time of the RMARKER between the devices.

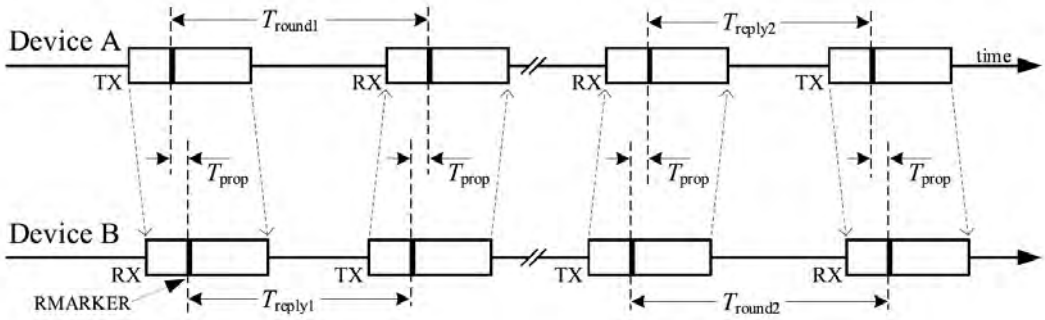

Figure 6-47b—DS-TWR

Each device precisely measures the transmission and reception times of the messages, and the resultant TOF may be estimated as $\hat{T}_{prop}$ by the equation:

$$\hat{T}_{prop} = \frac{(T_{round1} \times T_{round2} - T_{reply1} \times T_{reply2})}{(T_{round1} + T_{round2} + T_{reply1} + T_{reply2})}$$

See IEEE 802.15.4z-2020 - IEEE Standard for Low-Rate Wireless Networks—Amendment 1: Enhanced Ultra Wideband (UWB) Physical Layers (PHYs) and Associated Ranging Techniques at Sections 6.9.1.2.2, 6.9.1.2.3.

32. Claim 18 of the '779 Patent recites a "controller for" "estimating a range to the target wireless communications device based upon a plurality of determined propagation delays." The Accused Devices comprise a controller for estimating a range to the target wireless communications device based upon a plurality of determined propagation delays. For example, the Apple iPhone 13 comprises a controller for estimating a range to the target wireless

communications device (such as an Apple AirTag) based upon a plurality of determined propagation delays:

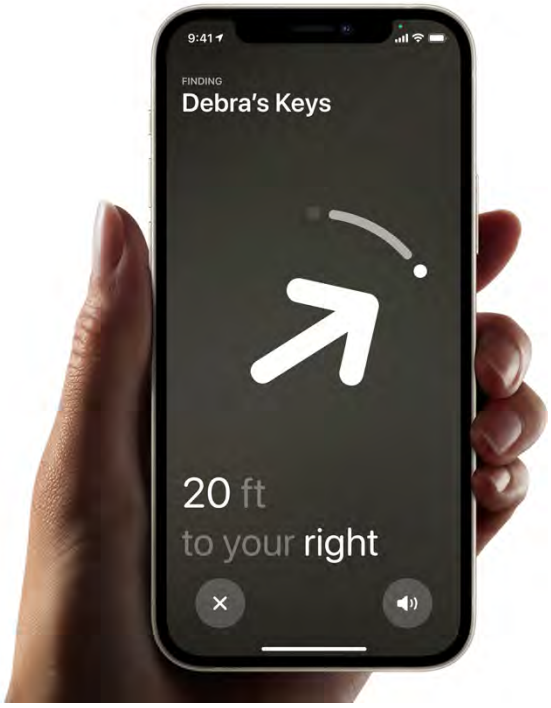

Cold. Warm. Warmer. Hot.

If your AirTag is nearby, your iPhone can lead you straight to it with Precision Finding.[1] You'll see the distance to your AirTag and the direction to head in — all thanks to Ultra Wideband technology.

Precision Finding compatible with:

iPhone 11
iPhone 11 Pro and iPhone 11 Pro Max
iPhone 12 and iPhone 12 mini
iPhone 12 Pro and iPhone 12 Pro Max
iPhone 13 and iPhone 13 mini
iPhone 13 Pro and iPhone 13 Pro Max

See https://www.apple.com/airtag/?afid=p238%7Cs43Yu6bTM-dc_mtid_1870765e38482_pcrid_573879837530_pgrid_120928559493_&cid=aos-us-kwgo-btb--slid---product-.

Use Precision Finding to pinpoint the location of your item

If you have a supported iPhone model with Ultra Wideband and your AirTag is nearby[1], you can use Precision Finding to help find it, even if it's stuck between couch cushions or hiding under a stack of mail. If your AirTag is out of range of your connected device, get directions to it first.

1. Open the Find My app, then tap the Items tab.
2. Choose the AirTag you want to locate, then tap Find. [1]
3. Follow the onscreen instructions and move around the space until your iPhone connects to your AirTag.
4. Your iPhone displays the distance and direction to your AirTag. Use that information to get closer to your AirTag until you find your lost item.
5. Tap the X button when you're done.

If you need more help

You can tap the sound button to play a sound on your AirTag if it's within Bluetooth range of your connected device. If it's too dark, a flashlight button will appear. To turn on the flashlight, tap it.

If you don't see Find, make sure that you turned on Location Access for the Find My app.

1. Go to Settings > Privacy > Location Services, and check that Location Services is on.
2. Scroll down and tap Find My.
3. Check "Ask Next Time," "While Using the App," or "While Using the App or Widgets." For the most accurate location, turn on Precise Location.

See https://support.apple.com/en-us/HT210967.

6.9.1.1 Overview

Support for ranging is optional. A device that supports ranging is called a ranging-capable device (RDEV). An RDEV shall support the ranging counter described in 6.9.1.3 and the figure of merit (FoM) described in 6.9.1.7. An RDEV may support optional crystal characterization described in 6.9.1.6 and the optional dynamic preamble code and channel selection (DPS) described in "Applications of IEEE Std 802.15.4" [B3]. RDEVs produce ranging results, used by higher layers to compute the ranges between devices. These ranging results may include transmit and receive ranging counter values, ranging FoM, angle of arrival (AOA) information, ranging tracking interval, and ranging tracking offset values.

~~Ranging is an optional feature.~~ This standard includes optional features to support relative positioning and localization. Accurate location may be achieved by a ranging-capable device (RDEV) using one of the ultra wideband (UWB) PHYs defined in this standard that provide the capability to accurately determine packet reception and transmission times. With accurate message timestamping, techniques such as two-way ranging (TWR) time of flight (TOF) can give very accurate estimates of relative separation distance between two devices. Similarly, an accurate location estimate for a mobile device can be determined, for example, when its distance from a number of fixed devices (of known location) is ascertained.

See IEEE 802.15.4z-2020 - IEEE Standard for Low-Rate Wireless Networks—Amendment 1: Enhanced Ultra Wideband (UWB) Physical Layers (PHYs) and Associated Ranging Techniques at Section 6.9.1.1.

33. Apple also knowingly and intentionally induces infringement of one or more claims of the '779 Patent in violation of 35 U.S.C. § 271(b). At least as of the filing and service of this amended complaint, Apple has knowledge of the '779 Patent and the infringing nature of the Accused Products. Despite this knowledge of the '779 Patent, Apple continues to actively encourage and instruct its customers and end users (for example, through user manuals and online instruction materials on its website) to use the Accused Products in ways that directly infringe the '779 Patent, for example by utilizing the accused ultra-wideband functionality on the Accused Products in an infringing manner. *See, e.g.*, https://support.apple.com/en-gb/guide/iphone/ipha779f0c10/15.0/ios/15.0 (Apple iPhone 13 User Manual – "Locate an AirTag or other item in Find My on iPhone"); https://support.apple.com/en-us/HT210973 (Apple AirTag instructions). Further, Apple advertises to its customers and end users that the "Precision Finding"

mode on an Apple handset utilizes the infringing ultra-wideband technology to locate an Apple AirTag. *See* https://support.apple.com/en-gb/HT210967. Apple provides these instructions and online materials knowing and intending (or with willful blindness to the fact) that its customers and end users will commit these infringing acts. Apple also continues to make, use, offer for sale, sell, and/or import the Accused Products, despite its knowledge of the '779 Patent, thereby specifically intending for and inducing its customers to infringe the '779 Patent through the customers' normal and customary use of the Accused Products.

34. Apple has also infringed, and continues to infringe, one or more claims of the '779 Patent by selling, offering for sale, or importing into the United States, the Accused Products, knowing that the Accused Products constitute a material part of the inventions claimed in the '779 Patent, are especially made or adapted to infringe the '779 Patent, and are not staple articles or commodities of commerce suitable for non-infringing use (as exemplified by the materials cited above). At least as of the filing and service of this complaint, Apple has knowledge of the '779 Patent and the infringing nature of the Accused Products. Apple has been, and currently is, contributorily infringing the '779 Patent in violation of 35 U.S.C. §§ 271(c) and (f).

35. By making, using, offering for sale, selling and/or importing into the United States the Accused Products, Apple has injured Plaintiff and is liable for infringement of the '779 Patent pursuant to 35 U.S.C. § 271.

36. As a result of Apple's direct infringement of the '779 Patent, Plaintiff is entitled to monetary damages (past, present, and future) in an amount adequate to compensate for Apple's infringement, but in no event less than a reasonable royalty for the use made of the invention by Apple, together with interest and costs as fixed by the Court.

37. As a result of Apple's indirect infringement of the '779 Patent (induced and contributory), Plaintiff is entitled to monetary damages (present and future) in an amount adequate to compensate for Apple's infringement, but in no event less than a reasonable royalty for the use made of the invention by Apple, together with interest and costs as fixed by the Court.

COUNT III

INFRINGEMENT OF U.S. PATENT NO. 7,321,777

38. Plaintiff realleges and incorporates by reference the foregoing paragraphs as if fully set forth herein.

39. Apple has been and is now directly infringing the '777 Patent, literally and/or under the doctrine of equivalents, in violation of 35 U.S.C. § 271(a), including by making, using, selling, and/or offering for sale in the United States or importing into the United States infringing products and systems, including at least the Accused Products identified above. The Accused Products satisfy all of the claim limitations of one or more claims of the '777 Patent, including but not limited to claim 12.

40. Claim 12 of the '777 Patent recites "[a] wireless device locator for locating a target wireless communications device." To the extent the preamble is limiting, the Accused Products comprise of a wireless device locator for locating a target wireless communications device. For example, the accused Apple iPhone 13 supports ultra-wideband functionality for locating a target wireless communications device, such as the Apple AirTag:

iPhone 13 Overview Switching to iPhone Tech Specs Buy

All models	5G (sub-6 GHz and mmWave)[7]
	Gigabit LTE with 4x4 MIMO and LAA[7]
	Wi-Fi 6 (802.11ax) with 2x2 MIMO
	Bluetooth 5.0 wireless technology
	Ultra Wideband chip for spatial awareness[8]
	NFC with reader mode
	Express Cards with power reserve

See https://www.apple.com/iphone-13/specs/.

AirTag Buy

Connectivity	Bluetooth for proximity finding
	Apple-designed U1 chip for Ultra Wideband and Precision Finding
	NFC tap for Lost Mode

See https://www.apple.com/airtag/?afid=p238%7Cs43Yu6bTM-dc_mtid_1870765e38482_pcrid_573879837530_pgrid_120928559493_&cid=aos-us-kwgo-btb--slid---product-.

41. Claim 12 of the '777 Patent recites that the wireless device locator comprises "at least one antenna and a transceiver connected thereto." The Accused Products comprise at least one antenna and a transceiver connected thereto. For example, the Apple iPhone 13 comprises at least one antenna and a transceiver:

iPhone 13 Overview Switching to iPhone Tech Specs Buy

All models	5G (sub-6 GHz and mmWave)[7]
	Gigabit LTE with 4x4 MIMO and LAA[7]
	Wi-Fi 6 (802.11ax) with 2x2 MIMO
	Bluetooth 5.0 wireless technology
	Ultra Wideband chip for spatial awareness[8]
	NFC with reader mode
	Express Cards with power reserve

See https://www.apple.com/iphone-13/specs/.

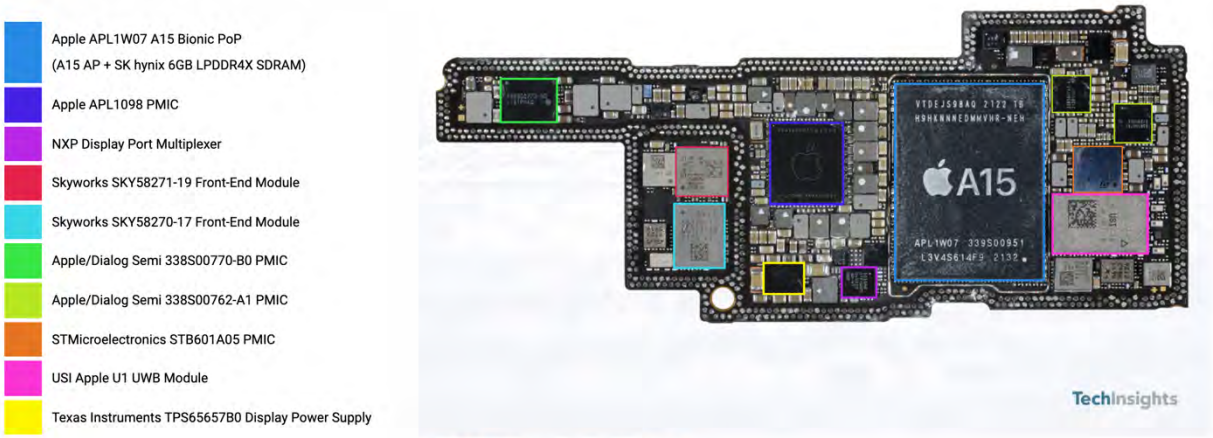

Figure 1. Apple iPhone Pro Board Shot

See https://www.techinsights.com/blog/teardown/apple-iphone-13-pro-teardown.

42. Claim 12 of the '777 Patent recites "a controller for" "cooperating with said transceiver for transmitting a plurality of location finding signals to the target wireless communications device and receiving a respective reply signal therefrom for each of said location finding signals." The Accused Products comprise a controller for cooperating with said transceiver for transmitting a plurality of location finding signals to the target wireless communications device and receiving a respective reply signal therefrom for each of said location finding signals. For example, the Apple iPhone 13 comprises a controller that cooperates with a transceiver for transmitting a plurality of location finding signals to a target wireless communications device (such

as the Apple AirTag) and receiving a respective reply signal therefrom for each of said location finding signals:

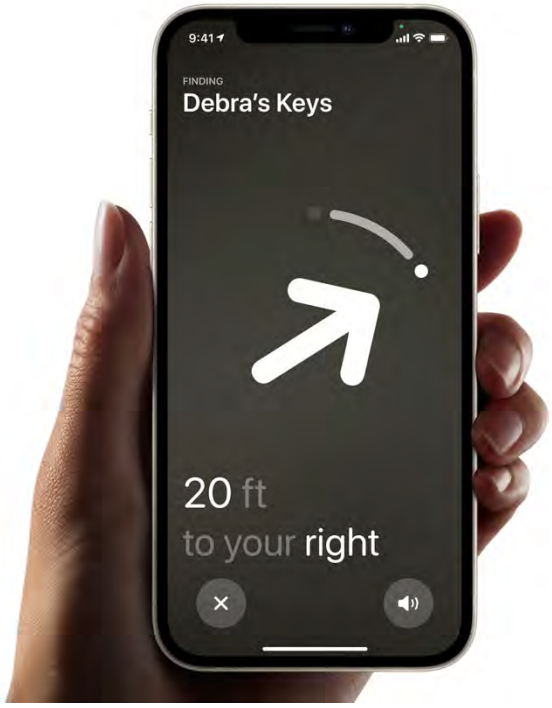

Cold. Warm. Warmer. Hot.

If your AirTag is nearby, your iPhone can lead you straight to it with Precision Finding.[1] You'll see the distance to your AirTag and the direction to head in — all thanks to Ultra Wideband technology.

Precision Finding compatible with:

iPhone 11
iPhone 11 Pro and iPhone 11 Pro Max
iPhone 12 and iPhone 12 mini
iPhone 12 Pro and iPhone 12 Pro Max
iPhone 13 and iPhone 13 mini
iPhone 13 Pro and iPhone 13 Pro Max

See https://www.apple.com/airtag/?afid=p238%7Cs43Yu6bTM-dc_mtid_1870765e38482_pcrid_573879837530_pgrid_120928559493_&cid=aos-us-kwgo-btb--slid---product-.

Use Precision Finding to pinpoint the location of your item

If you have a supported iPhone model with Ultra Wideband and your AirTag is nearby[1], you can use Precision Finding to help find it, even if it's stuck between couch cushions or hiding under a stack of mail. If your AirTag is out of range of your connected device, get directions to it first.

1. Open the Find My app, then tap the Items tab.
2. Choose the AirTag you want to locate, then tap Find. [1]
3. Follow the onscreen instructions and move around the space until your iPhone connects to your AirTag.
4. Your iPhone displays the distance and direction to your AirTag. Use that information to get closer to your AirTag until you find your lost item.
5. Tap the X button when you're done.

If you need more help

You can tap the sound button to play a sound on your AirTag if it's within Bluetooth range of your connected device. If it's too dark, a flashlight button will appear. To turn on the flashlight, tap it.

If you don't see Find, make sure that you turned on Location Access for the Find My app.

1. Go to Settings > Privacy > Location Services, and check that Location Services is on.
2. Scroll down and tap Find My.
3. Check "Ask Next Time," "While Using the App," or "While Using the App or Widgets." For the most accurate location, turn on Precise Location.

See https://support.apple.com/en-us/HT210967.

6.9.1.2.2 Single-sided two-way ranging (SS-TWR)

SS-TWR involves a measurement of the round-trip delay of a single message from one device to another and a response sent back to the original device. The operation of SS-TWR is as shown in Figure 6-47a, where device A initiates the exchange and device B responds to complete the exchange and T_{prop} is the propagation time of the RMARKER between the devices.

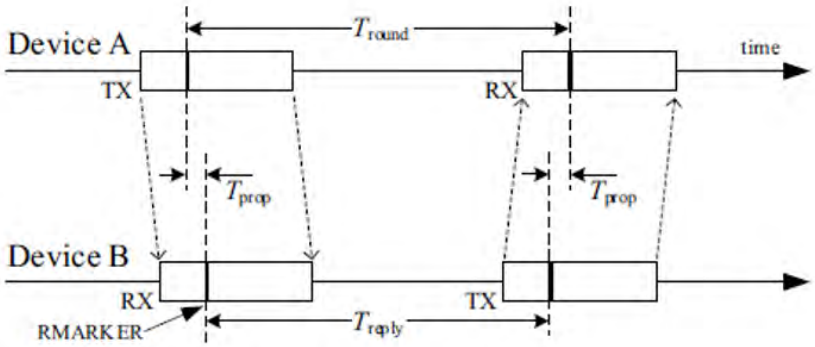

Figure 6-47a—SS-TWR

Each device precisely measures the transmission and reception times of the message frames, and so can calculate times T_{round} and T_{reply} by simple subtraction. Hence, the resultant TOF may be estimated as $\hat{T}_{prop}$ by the equation:

$$\hat{T}_{prop} = \frac{1}{2}(T_{round} - T_{reply})$$

* * *

When employing SS-TWR, for the TOF to be calculated at device A, device A needs the reply time T_{reply} employed by device B. When T_{reply} is determined by device B after its transmission, an additional message is necessary to bring this value to device A, as shown in Figure 6-48a and described in 6.9.6.3. When T_{reply} can be accurately predicted by device B before its transmission, the value can be embedded in the reply message itself, as shown in Figure 6-48b and described in 6.9.6.4. Alternatively, if device B has the ability to always reply with sufficiently accurate constant or pre-known reply time, it obviates the need for any transfer of T_{reply} as part of the ranging exchange, as described in 6.9.6.5.

* * *

6.9.1.2.3 Double-sided two-way ranging (DS-TWR)

DS-TWR is an extension of SS-TWR in which two round-trip time measurements are used and combined to give the TOF result with a reduced error in the presence of uncorrected clock frequency offset even for quite long response delays. The operation of DS-TWR is shown in Figure 6-47b, where device A initiates the first round-trip time measurement to which device B responds, after which device B initiates the second round-trip time measurement to which device A responds completing the full DS-TWR exchange and T_{prop} is the propagation time of the RMARKER between the devices.

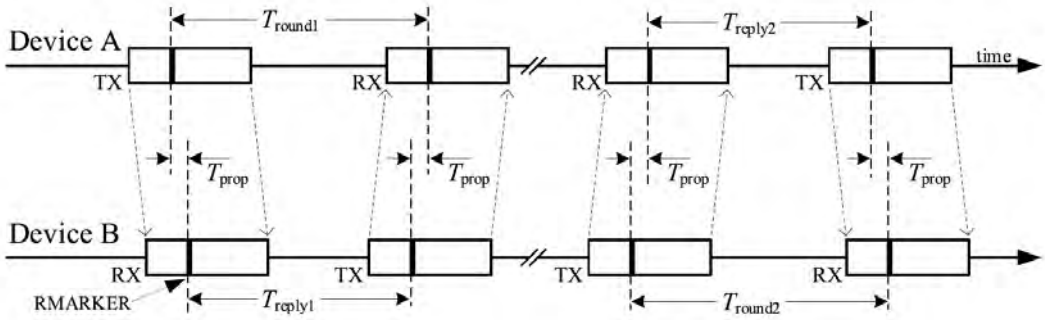

Figure 6-47b—DS-TWR

Each device precisely measures the transmission and reception times of the messages, and the resultant TOF may be estimated as $\hat{T}_{prop}$ by the equation:

$$\hat{T}_{prop} = \frac{(T_{round1} \times T_{round2} - T_{reply1} \times T_{reply2})}{(T_{round1} + T_{round2} + T_{reply1} + T_{reply2})}$$

See IEEE 802.15.4z-2020 - IEEE Standard for Low-Rate Wireless Networks—Amendment 1: Enhanced Ultra Wideband (UWB) Physical Layers (PHYs) and Associated Ranging Techniques at Sections 6.9.1.2.2, 6.9.1.2.3.

43. Claim 12 of the '777 Patent recites "a controller for" "determining a propagation delay associated with the transmission of each location finding signal and the respective reply signal therefor based upon a known device latency of the target wireless communications device." The Accused Products comprise a controller for determining a propagation delay associated with the transmission of each location finding signal and the respective reply signal therefor based upon a known device latency of the target wireless communications device. For example, the Apple

iPhone 13 comprises a controller for determining a propagation delay associated with the transmission of each location finding signal and the respective reply signal therefor based upon a known device latency of the target wireless communications device (such as an Apple AirTag):

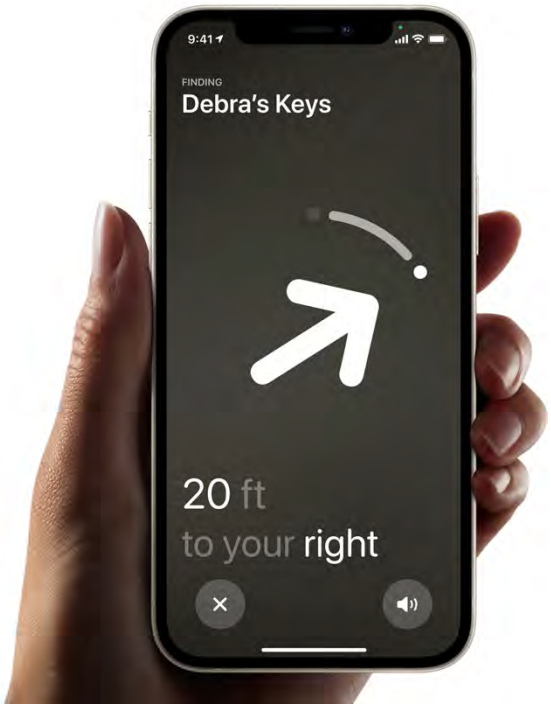

Cold. Warm. Warmer. Hot.

If your AirTag is nearby, your iPhone can lead you straight to it with Precision Finding.[1] You'll see the distance to your AirTag and the direction to head in — all thanks to Ultra Wideband technology.

Precision Finding compatible with:

iPhone 11
iPhone 11 Pro and iPhone 11 Pro Max
iPhone 12 and iPhone 12 mini
iPhone 12 Pro and iPhone 12 Pro Max
iPhone 13 and iPhone 13 mini
iPhone 13 Pro and iPhone 13 Pro Max

See https://www.apple.com/airtag/?afid=p238%7Cs43Yu6bTM-dc_mtid_1870765e38482_pcrid_573879837530_pgrid_120928559493_&cid=aos-us-kwgo-btb--slid---product-.

Use Precision Finding to pinpoint the location of your item

If you have a supported iPhone model with Ultra Wideband and your AirTag is nearby[1], you can use Precision Finding to help find it, even if it's stuck between couch cushions or hiding under a stack of mail. If your AirTag is out of range of your connected device, get directions to it first.

1. Open the Find My app, then tap the Items tab.
2. Choose the AirTag you want to locate, then tap Find. [1]
3. Follow the onscreen instructions and move around the space until your iPhone connects to your AirTag.
4. Your iPhone displays the distance and direction to your AirTag. Use that information to get closer to your AirTag until you find your lost item.
5. Tap the X button when you're done.

If you need more help

You can tap the sound button to play a sound on your AirTag if it's within Bluetooth range of your connected device. If it's too dark, a flashlight button will appear. To turn on the flashlight, tap it.

If you don't see Find, make sure that you turned on Location Access for the Find My app.

1. Go to Settings > Privacy > Location Services, and check that Location Services is on.
2. Scroll down and tap Find My.
3. Check "Ask Next Time," "While Using the App," or "While Using the App or Widgets." For the most accurate location, turn on Precise Location.

See https://support.apple.com/en-us/HT210967.

6.9.1.2.2 Single-sided two-way ranging (SS-TWR)

SS-TWR involves a measurement of the round-trip delay of a single message from one device to another and a response sent back to the original device. The operation of SS-TWR is as shown in Figure 6-47a, where device A initiates the exchange and device B responds to complete the exchange and T_{prop} is the propagation time of the RMARKER between the devices.

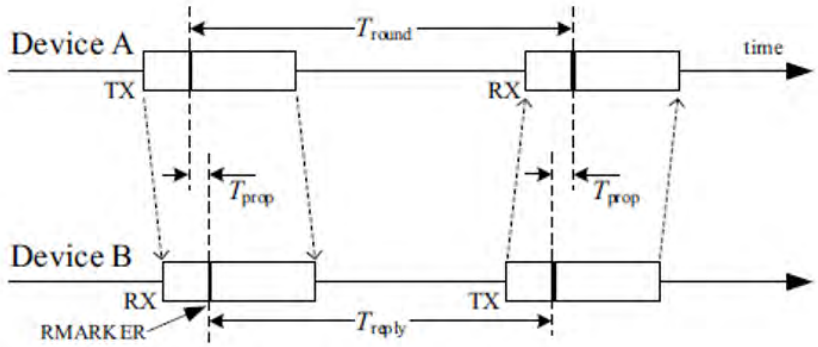

Figure 6-47a—SS-TWR

Each device precisely measures the transmission and reception times of the message frames, and so can calculate times T_{round} and T_{reply} by simple subtraction. Hence, the resultant TOF may be estimated as $\hat{T}_{prop}$ by the equation:

$$\hat{T}_{prop} = \frac{1}{2}(T_{round} - T_{reply})$$

* * *

When employing SS-TWR, for the TOF to be calculated at device A, device A needs the reply time T_{reply} employed by device B. When T_{reply} is determined by device B after its transmission, an additional message is necessary to bring this value to device A, as shown in Figure 6-48a and described in 6.9.6.3. When T_{reply} can be accurately predicted by device B before its transmission, the value can be embedded in the reply message itself, as shown in Figure 6-48b and described in 6.9.6.4. Alternatively, if device B has the ability to always reply with sufficiently accurate constant or pre-known reply time, it obviates the need for any transfer of T_{reply} as part of the ranging exchange, as described in 6.9.6.5.

* * *

6.9.1.2.3 Double-sided two-way ranging (DS-TWR)

DS-TWR is an extension of SS-TWR in which two round-trip time measurements are used and combined to give the TOF result with a reduced error in the presence of uncorrected clock frequency offset even for quite long response delays. The operation of DS-TWR is shown in Figure 6-47b, where device A initiates the first round-trip time measurement to which device B responds, after which device B initiates the second round-trip time measurement to which device A responds completing the full DS-TWR exchange and T_{prop} is the propagation time of the RMARKER between the devices.

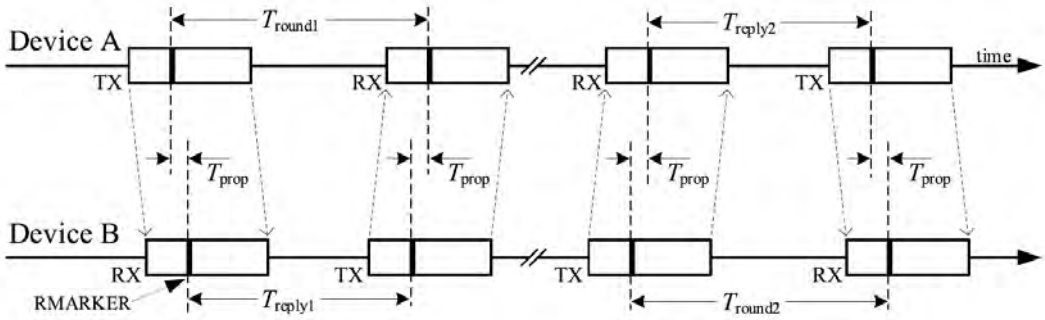

Figure 6-47b—DS-TWR

Each device precisely measures the transmission and reception times of the messages, and the resultant TOF may be estimated as $\hat{T}_{prop}$ by the equation:

$$\hat{T}_{prop} = \frac{(T_{round1} \times T_{round2} - T_{reply1} \times T_{reply2})}{(T_{round1} + T_{round2} + T_{reply1} + T_{reply2})}$$

See IEEE 802.15.4z-2020 - IEEE Standard for Low-Rate Wireless Networks—Amendment 1: Enhanced Ultra Wideband (UWB) Physical Layers (PHYs) and Associated Ranging Techniques at Sections 6.9.1.2.2, 6.9.1.2.3.

44. Claim 12 of the '777 Patent recites "a controller for" "estimating a range to the target wireless communications device based upon a plurality of determined propagation delays." The Accused Products comprise a controller for estimating a range to the target wireless communications device based upon a plurality of determined propagation delays. For example, the Apple iPhone 13 comprises a controller for estimating a range to the target wireless

communications device (such as an Apple AirTag) based upon a plurality of determined propagation delays:

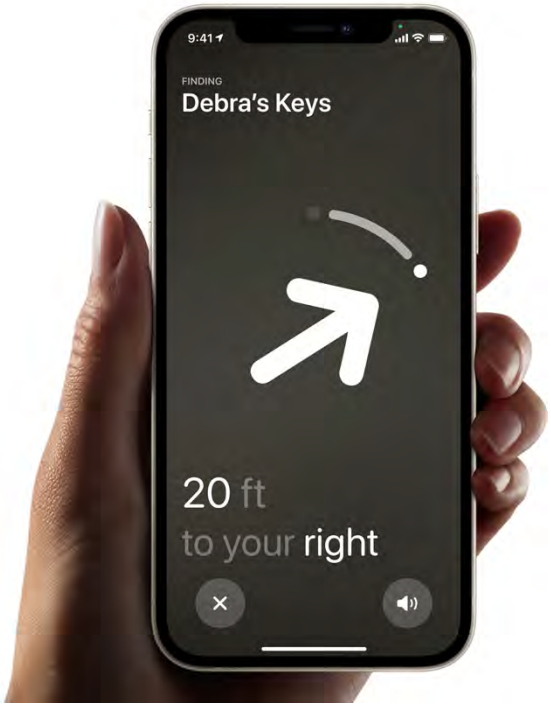

Cold. Warm. Warmer. Hot.

If your AirTag is nearby, your iPhone can lead you straight to it with Precision Finding.[1] You'll see the distance to your AirTag and the direction to head in — all thanks to Ultra Wideband technology.

Precision Finding compatible with:

iPhone 11
iPhone 11 Pro and iPhone 11 Pro Max
iPhone 12 and iPhone 12 mini
iPhone 12 Pro and iPhone 12 Pro Max
iPhone 13 and iPhone 13 mini
iPhone 13 Pro and iPhone 13 Pro Max

See https://www.apple.com/airtag/?afid=p238%7Cs43Yu6bTM-dc_mtid_1870765e38482_pcrid_573879837530_pgrid_120928559493_&cid=aos-us-kwgo-btb--slid---product-.

Use Precision Finding to pinpoint the location of your item

If you have a supported iPhone model with Ultra Wideband and your AirTag is nearby[1], you can use Precision Finding to help find it, even if it's stuck between couch cushions or hiding under a stack of mail. If your AirTag is out of range of your connected device, get directions to it first.

1. Open the Find My app, then tap the Items tab.
2. Choose the AirTag you want to locate, then tap Find. [1]
3. Follow the onscreen instructions and move around the space until your iPhone connects to your AirTag.
4. Your iPhone displays the distance and direction to your AirTag. Use that information to get closer to your AirTag until you find your lost item.
5. Tap the X button when you're done.

If you need more help

You can tap the sound button to play a sound on your AirTag if it's within Bluetooth range of your connected device. If it's too dark, a flashlight button will appear. To turn on the flashlight, tap it.

If you don't see Find, make sure that you turned on Location Access for the Find My app.

1. Go to Settings > Privacy > Location Services, and check that Location Services is on.
2. Scroll down and tap Find My.
3. Check "Ask Next Time," "While Using the App," or "While Using the App or Widgets." For the most accurate location, turn on Precise Location.

See https://support.apple.com/en-us/HT210967.

6.9.1.1 Overview

Support for ranging is optional. A device that supports ranging is called a ranging-capable device (RDEV). An RDEV shall support the ranging counter described in 6.9.1.3 and the figure of merit (FoM) described in 6.9.1.7. An RDEV may support optional crystal characterization described in 6.9.1.6 and the optional dynamic preamble code and channel selection (DPS) described in "Applications of IEEE Std 802.15.4" [B3]. RDEVs produce ranging results, used by higher layers to compute the ranges between devices. These ranging results may include transmit and receive ranging counter values, ranging FoM, angle of arrival (AOA) information, ranging tracking interval, and ranging tracking offset values.

~~Ranging is an optional feature.~~ This standard includes optional features to support relative positioning and localization. Accurate location may be achieved by a ranging-capable device (RDEV) using one of the ultra wideband (UWB) PHYs defined in this standard that provide the capability to accurately determine packet reception and transmission times. With accurate message timestamping, techniques such as two-way ranging (TWR) time of flight (TOF) can give very accurate estimates of relative separation distance between two devices. Similarly, an accurate location estimate for a mobile device can be determined, for example, when its distance from a number of fixed devices (of known location) is ascertained.

See IEEE 802.15.4z-2020 - IEEE Standard for Low-Rate Wireless Networks—Amendment 1: Enhanced Ultra Wideband (UWB) Physical Layers (PHYs) and Associated Ranging Techniques at Section 6.9.1.1.

45. Apple also knowingly and intentionally induces infringement of one or more claims of the '777 Patent in violation of 35 U.S.C. § 271(b). At least as of the filing and service of this amended complaint, Apple has knowledge of the '777 Patent and the infringing nature of the Accused Products. For example, Apple obtained knowledge of the '777 Patent at least as of January 21, 2022 when it was served with the initial complaint. Dkt. No. 6. Despite this knowledge of the '777 Patent, Apple continues to actively encourage and instruct its customers and end users (for example, through user manuals and online instruction materials on its website) to use the Accused Products in ways that directly infringe the '777 Patent, for example by utilizing the accused ultra-wideband functionality on the Accused Products in an infringing manner. *See, e.g.*, https://support.apple.com/en-gb/guide/iphone/ipha779f0c10/15.0/ios/15.0 (Apple iPhone 13 User Manual – "Locate an AirTag or other item in Find My on iPhone");

https://support.apple.com/en-us/HT210973 (Apple AirTag instructions). Further, Apple advertises to its customers and end users that the "Precision Finding" mode on an Apple handset utilizes the infringing ultra-wideband technology to locate an Apple AirTag. *See* https://support.apple.com/en-gb/HT210967. Apple provides these instructions and online materials knowing and intending (or with willful blindness to the fact) that its customers and end users will commit these infringing acts. Apple also continues to make, use, offer for sale, sell, and/or import the Accused Products, despite its knowledge of the '777 Patent, thereby specifically intending for and inducing its customers to infringe the '777 Patent through the customers' normal and customary use of the Accused Products.

46. Apple has also infringed, and continues to infringe, one or more claims of the '777 Patent by selling, offering for sale, or importing into the United States, the Accused Products, knowing that the Accused Products constitute a material part of the inventions claimed in the '777 Patent, are especially made or adapted to infringe the '777 Patent, and are not staple articles or commodities of commerce suitable for non-infringing use (as exemplified by the materials cited above). At least as of the filing and service of this amended complaint, Apple has knowledge of the '777 Patent and the infringing nature of the Accused Products. Apple has been, and currently is, contributorily infringing the '777 Patent in violation of 35 U.S.C. §§ 271(c) and (f).

47. By making, using, offering for sale, selling and/or importing into the United States the Accused Products, Apple has injured Plaintiff and is liable for infringement of the '777 Patent pursuant to 35 U.S.C. § 271.

48. As a result of Apple's direct infringement of the '777 Patent, Plaintiff is entitled to monetary damages (past, present, and future) in an amount adequate to compensate for Apple's

infringement, but in no event less than a reasonable royalty for the use made of the invention by Apple, together with interest and costs as fixed by the Court.

49. As a result of Apple's indirect infringement of the '777 Patent (induced and contributory), Plaintiff is entitled to monetary damages (present and future) in an amount adequate to compensate for Apple's infringement, but in no event less than a reasonable royalty for the use made of the invention by Apple, together with interest and costs as fixed by the Court.

COUNT IV

INFRINGEMENT OF U.S. PATENT NO. 7,765,399

50. Plaintiff realleges and incorporates by reference the foregoing paragraphs as if fully set forth herein.

51. Apple has been and is now directly infringing the '399 Patent, literally and/or under the doctrine of equivalents, in violation of 35 U.S.C. § 271(a), including by making, using, selling, and/or offering for sale in the United States or importing into the United States infringing products, including at least the Accused Products identified above. The Accused Products satisfy all of the claim limitations of one or more claims of the '399 Patent, including but not limited to claim 1.

52. Claim 1 of the '399 Patent recites "[a] computer system, comprising: a portable mobile computing device including a secure user processor, a non-secure user processor, a communications transceiver, and a cryptographic engine." The Accused Products comprise a computer system comprising a portable mobile computing device including a secure user processor, a non-secure user processor, a communications transceiver, and a cryptographic engine. For example, the iPhone 13 is a computer system comprising a portable mobile computing device that includes a secure user processor, a non-secure user processor, a communications transceiver, and a cryptographic engine:

iPhone 13

Overview | Switching to iPhone | Tech Specs | Buy

All models	5G (sub-6 GHz and mmWave)[7]
	Gigabit LTE with 4x4 MIMO and LAA[7]
	Wi-Fi 6 (802.11ax) with 2x2 MIMO
	Bluetooth 5.0 wireless technology
	Ultra Wideband chip for spatial awareness[8]
	NFC with reader mode
	Express Cards with power reserve

See https://www.apple.com/iphone-13/specs/.

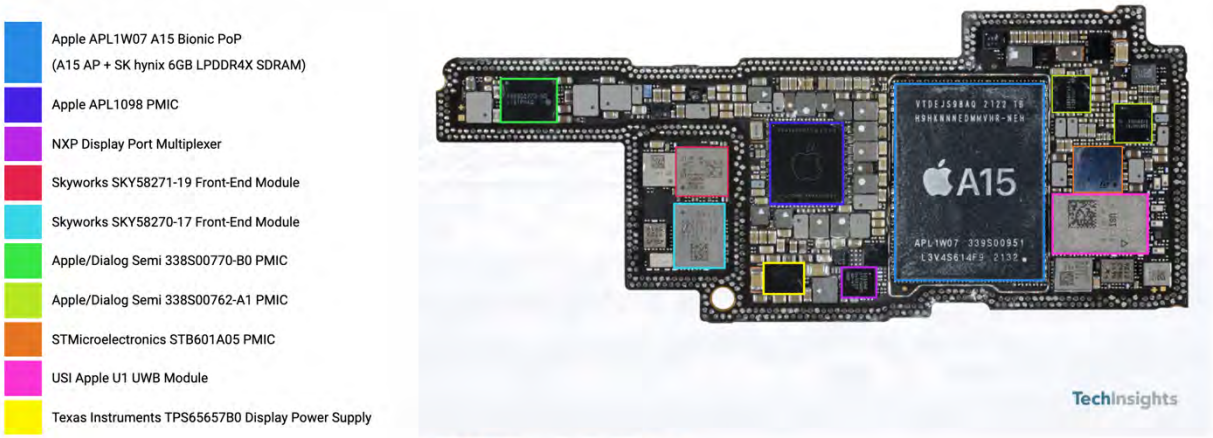

Figure 1. Apple iPhone Pro Board Shot

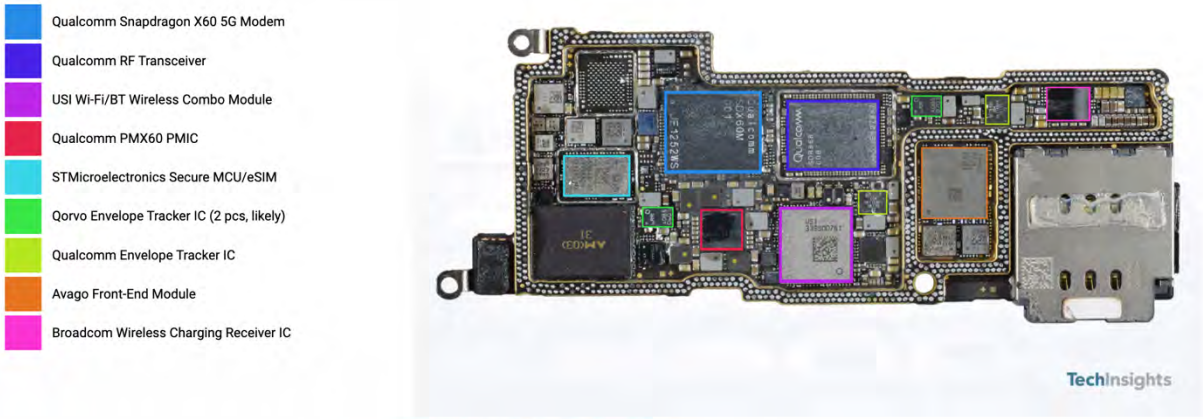

Figure 3. Apple iPhone Pro Board Shot

See https://www.techinsights.com/blog/teardown/apple-iphone-13-pro-teardown.

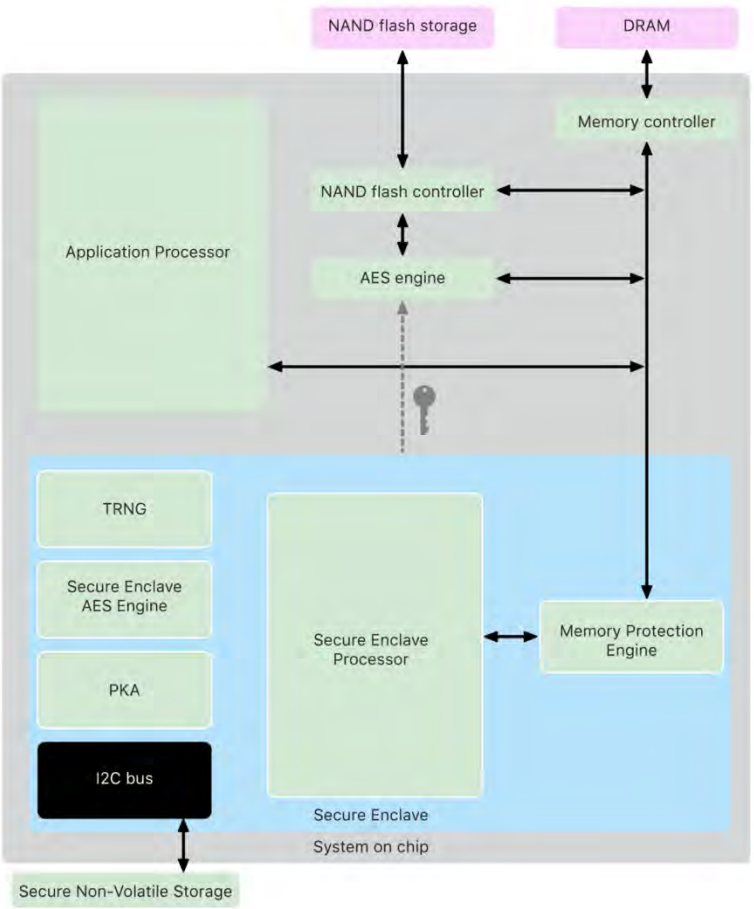

See https://support.apple.com/en-gb/guide/security/sec59b0b31ff/web.

53. Claim 1 recites "said secure user processor comprising" "a trusted microprocessor, a trusted operating system executing on said trusted microprocessor, and a trusted application software executing on said trusted microprocessor." The Accused Products comprise a secure user processor comprising a trusted microprocessor, a trusted operating system executing on said trusted microprocessor, and a trusted application software executing on said trusted microprocessor. For example, the iPhone 13 contains a Secure Enclave Processor with a trusted microprocessor, a trusted operating system executing on the trusted microprocessor, and a trusted application software executing on the trusted microprocessor:

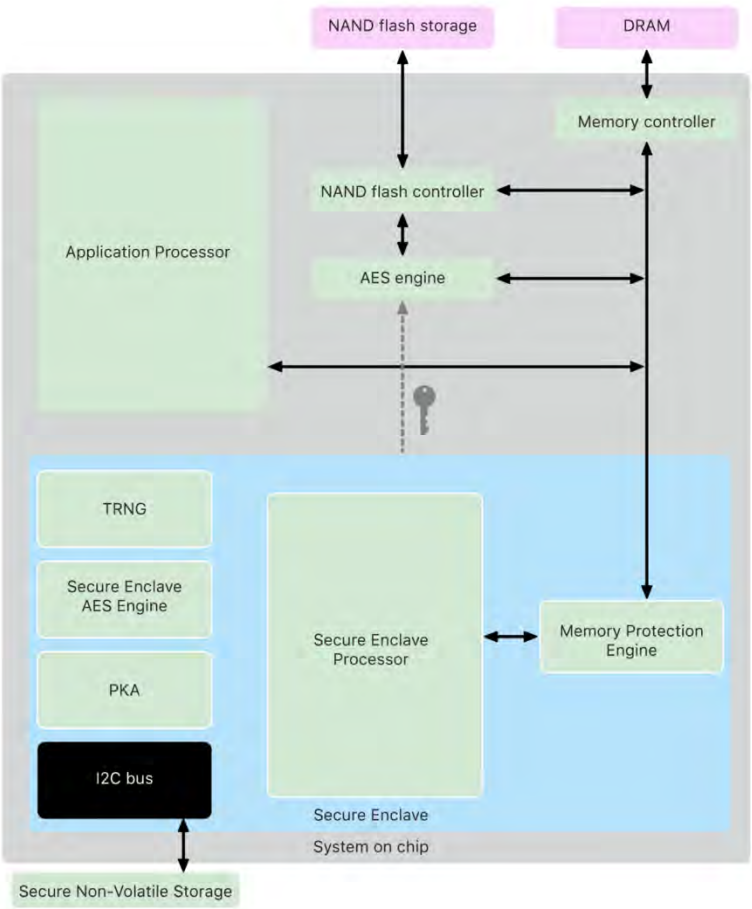

Secure Enclave Processor

The Secure Enclave Processor provides the main computing power for the Secure Enclave. To provide the strongest isolation, the Secure Enclave Processor is dedicated solely for Secure Enclave use. This helps prevent side-channel attacks that depend on malicious software sharing the same execution core as the target software under attack.

The Secure Enclave Processor runs an Apple-customised version of the L4 microkernel. It's designed to operate efficiently at a lower clock speed that helps protect it against clock and power attacks. The Secure Enclave Processor, starting with the A11 and S4, includes a memory-protected engine and encrypted memory with anti-replay capabilities, secure boot, a dedicated random number generator and its own AES engine.

Secure Enclave Boot ROM

The Secure Enclave includes a dedicated Secure Enclave Boot ROM. Like the Application Processor Boot ROM, the Secure Enclave Boot ROM is immutable code that establishes the hardware root of trust for the Secure Enclave.

On system startup, iBoot assigns a dedicated region of memory to the Secure Enclave. Before using the memory, the Secure Enclave Boot ROM initialises the Memory Protection Engine to provide cryptographic protection of the Secure Enclave protected memory.

The Application Processor then sends the sepOS image to the Secure Enclave Boot ROM. After copying the sepOS image into the Secure Enclave protected memory, the Secure Enclave Boot ROM checks the cryptographic hash and signature of the image to verify that the sepOS is authorised to run on the device. If the sepOS image is properly signed to run on the device, the Secure Enclave Boot ROM transfers control to sepOS. If the signature isn't valid, the Secure Enclave Boot ROM is designed to prevent any further use of the Secure Enclave until the next chip reset.

On Apple A10 and later SoCs, the Secure Enclave Boot ROM locks a hash of the sepOS into a register dedicated to this purpose. The Public Key Accelerator uses this hash for operating-system-bound (OS-bound) keys.

See https://support.apple.com/en-gb/guide/security/sec59b0b31ff/web.

54. Claim 1 recites "said non-secure user processor comprising" "an untrusted microprocessor, an untrusted operating system executing on said untrusted microprocessor, and an untrusted application software executing on said untrusted microprocessor." The Accused Products comprise a non-secure user processor comprising an untrusted microprocessor, an untrusted operating system executing on said untrusted microprocessor, and an untrusted application software executing on said untrusted microprocessor. For example, the iPhone 13 comprises an Application Processor comprising an untrusted microprocessor, an untrusted operating system executing on the untrusted microprocessor, and untrusted application software executing on the untrusted microprocessor:

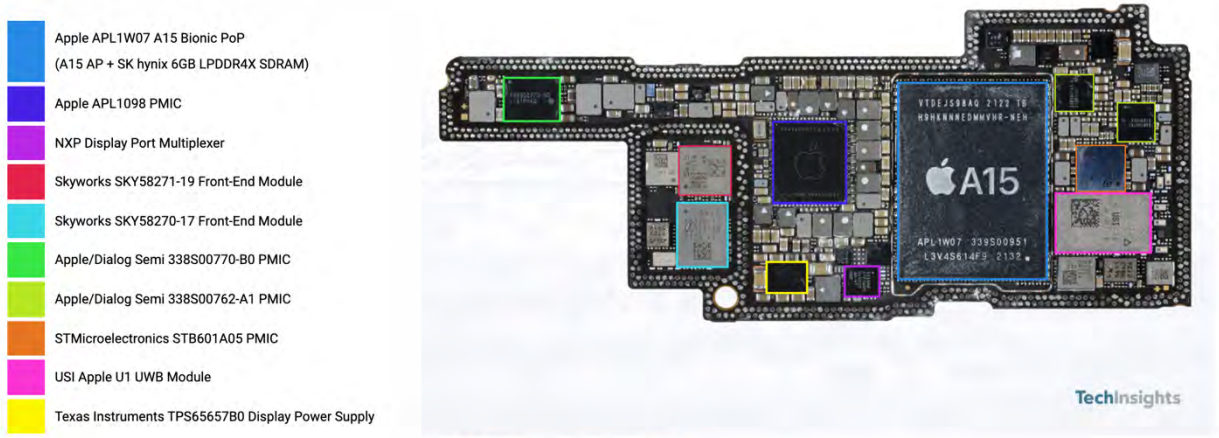

Figure 1. Apple iPhone Pro Board Shot

See https://www.techinsights.com/blog/teardown/apple-iphone-13-pro-teardown.

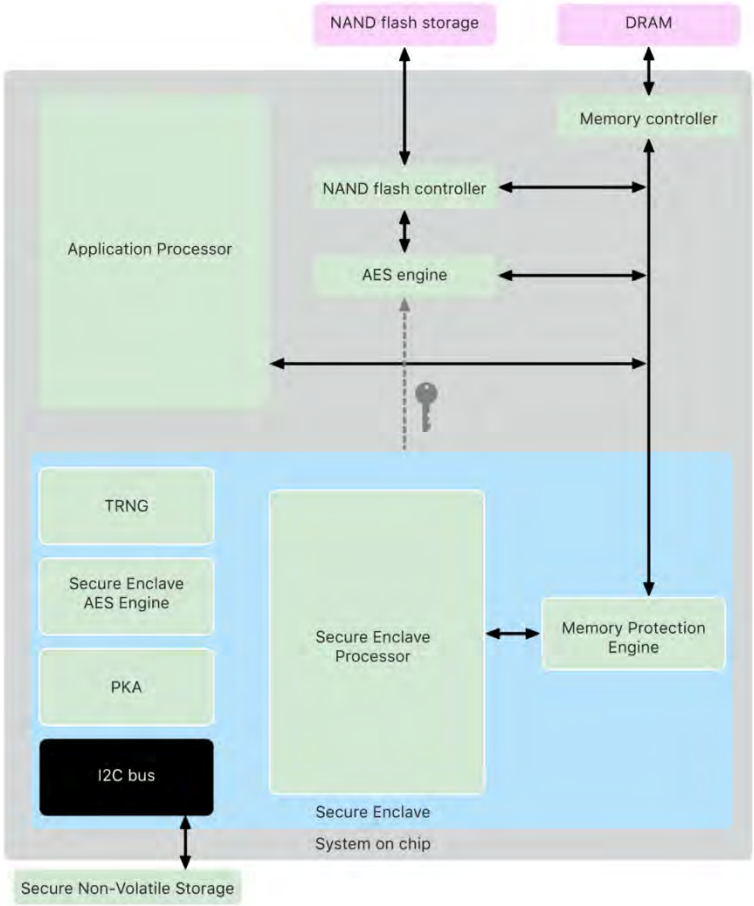

See https://support.apple.com/en-gb/guide/security/sec59b0b31ff/web.

iOS 15 is packed with new features that help you connect with others, be more present and in the moment, explore the world, and use powerful intelligence to do more with iPhone than ever before.

See https://www.apple.com/ios/ios-15/.

55. Claim 1 recites "said cryptographic engine configured for encrypting any data communicated from said secure user processor to said non-secure user processor, comprising" "a trusted cryptographic processor, and a trusted operating system executing on said trusted cryptographic processor." The Accused Products comprise a cryptographic engine configured for encrypting data communicated from said secure user processor to said non-secure user processor, comprising a trusted cryptographic processor and a trusted operating system executing on the trusted cryptographic processor. For example, the iPhone 13 contains a Secure Enclave AES Engine and a trusted operating system:

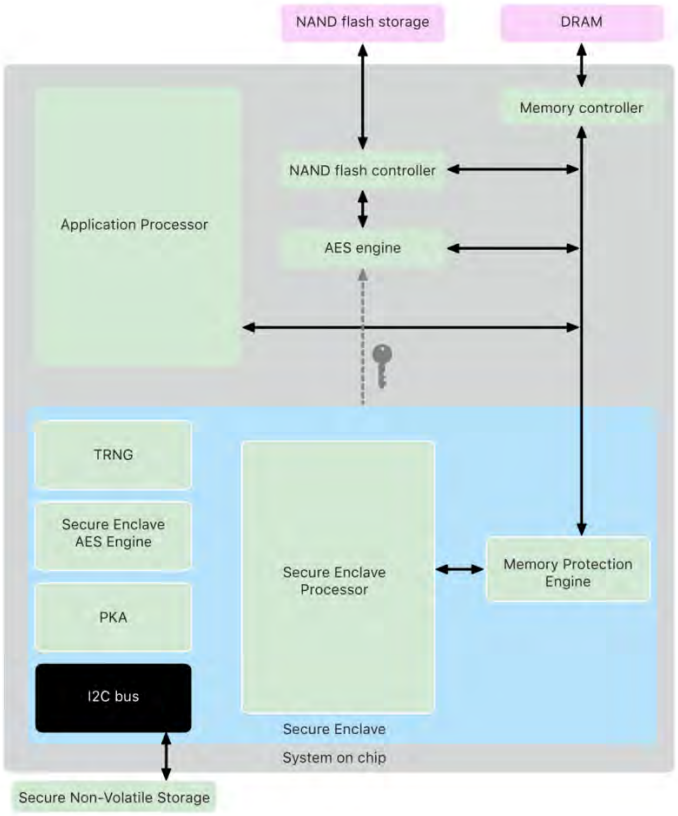

Secure Enclave Processor

The Secure Enclave Processor provides the main computing power for the Secure Enclave. To provide the strongest isolation, the Secure Enclave Processor is dedicated solely for Secure Enclave use. This helps prevent side-channel attacks that depend on malicious software sharing the same execution core as the target software under attack.

The Secure Enclave Processor runs an Apple-customised version of the L4 microkernel. It's designed to operate efficiently at a lower clock speed that helps protect it against clock and power attacks. The Secure Enclave Processor, starting with the A11 and S4, includes a memory-protected engine and encrypted memory with anti-replay capabilities, secure boot, a dedicated random number generator and its own AES engine.

Secure Enclave AES Engine

The Secure Enclave AES Engine is a hardware block used to perform symmetric cryptography based on the AES cipher. The AES Engine is designed to resist leaking information by using timing and Static Power Analysis (SPA). Starting with the A9 SoC, the AES Engine also includes Dynamic Power Analysis (DPA) countermeasures.

The AES Engine supports hardware and software keys. Hardware keys are derived from the Secure Enclave UID or GID. These keys stay within the AES Engine and aren't made visible even to sepOS software. Although software can request encryption and decryption operations with hardware keys, it can't extract the keys.

On Apple A10 and newer SoCs, the AES Engine includes lockable seed bits that diversify keys derived from the UID or GID. This allows data access to be conditioned on the device's mode of operation. For example, lockable seed bits are used to deny access to password-protected data when booting from Device Firmware Update (DFU) mode. For more information, see Passcodes and passwords.

See https://support.apple.com/en-gb/guide/security/sec59b0b31ff/web.

56. Claim 1 recites "a first data communication link communicating data between said secure processor and said cryptographic engine." The Accused Products comprise a first data communication link communicating data between said secure processor and said cryptographic engine. For example, the iPhone 13 contains a Secure Enclave Processor that contains a data communication link that communicates data between the Secure Enclave Processor to the AES Engine:

Secure Enclave Processor

The Secure Enclave Processor provides the main computing power for the Secure Enclave. To provide the strongest isolation, the Secure Enclave Processor is dedicated solely for Secure Enclave use. This helps prevent side-channel attacks that depend on malicious software sharing the same execution core as the target software under attack.

The Secure Enclave Processor runs an Apple-customised version of the L4 microkernel. It's designed to operate efficiently at a lower clock speed that helps protect it against clock and power attacks. The Secure Enclave Processor, starting with the A11 and S4, includes a memory-protected engine and encrypted memory with anti-replay capabilities, secure boot, a dedicated random number generator and its own AES engine.

Secure Enclave AES Engine

The Secure Enclave AES Engine is a hardware block used to perform symmetric cryptography based on the AES cipher. The AES Engine is designed to resist leaking information by using timing and Static Power Analysis (SPA). Starting with the A9 SoC, the AES Engine also includes Dynamic Power Analysis (DPA) countermeasures.

The AES Engine supports hardware and software keys. Hardware keys are derived from the Secure Enclave UID or GID. These keys stay within the AES Engine and aren't made visible even to sepOS software. Although software can request encryption and decryption operations with hardware keys, it can't extract the keys.

On Apple A10 and newer SoCs, the AES Engine includes lockable seed bits that diversify keys derived from the UID or GID. This allows data access to be conditioned on the device's mode of operation. For example, lockable seed bits are used to deny access to password-protected data when booting from Device Firmware Update (DFU) mode. For more information, see Passcodes and passwords.

See https://support.apple.com/en-gb/guide/security/sec59b0b31ff/web.

57. Claim 1 recites "a second data communication link communicating data between said non-secure processor and said cryptographic engine." The Accused Products comprise a second data communication link communicating data between said non-secure processor and said cryptographic engine. For example, the iPhone 13 contains a data communication link between the Application Processor and the Secure Enclave AES Engine:

Secure Enclave AES Engine

The Secure Enclave AES Engine is a hardware block used to perform symmetric cryptography based on the AES cipher. The AES Engine is designed to resist leaking information by using timing and Static Power Analysis (SPA). Starting with the A9 SoC, the AES Engine also includes Dynamic Power Analysis (DPA) countermeasures.

The AES Engine supports hardware and software keys. Hardware keys are derived from the Secure Enclave UID or GID. These keys stay within the AES Engine and aren't made visible even to sepOS software. Although software can request encryption and decryption operations with hardware keys, it can't extract the keys.

On Apple A10 and newer SoCs, the AES Engine includes lockable seed bits that diversify keys derived from the UID or GID. This allows data access to be conditioned on the device's mode of operation. For example, lockable seed bits are used to deny access to password-protected data when booting from Device Firmware Update (DFU) mode. For more information, see Passcodes and passwords.

Secure Enclave Boot ROM

The Secure Enclave includes a dedicated Secure Enclave Boot ROM. Like the Application Processor Boot ROM, the Secure Enclave Boot ROM is immutable code that establishes the hardware root of trust for the Secure Enclave.

On system startup, iBoot assigns a dedicated region of memory to the Secure Enclave. Before using the memory, the Secure Enclave Boot ROM initialises the Memory Protection Engine to provide cryptographic protection of the Secure Enclave protected memory.

The Application Processor then sends the sepOS image to the Secure Enclave Boot ROM. After copying the sepOS image into the Secure Enclave protected memory, the Secure Enclave Boot ROM checks the cryptographic hash and signature of the image to verify that the sepOS is authorised to run on the device. If the sepOS image is properly signed to run on the device, the Secure Enclave Boot ROM transfers control to sepOS. If the signature isn't valid, the Secure Enclave Boot ROM is designed to prevent any further use of the Secure Enclave until the next chip reset.

On Apple A10 and later SoCs, the Secure Enclave Boot ROM locks a hash of the sepOS into a register dedicated to this purpose. The Public Key Accelerator uses this hash for operating-system-bound (OS-bound) keys.

See https://support.apple.com/en-gb/guide/security/sec59b0b31ff/web.

58. Claim 1 recites "a secure human/machine interface configured for enabling bi-directional communication of classified information exclusively between a user and said secure user processor." The Accused Products comprise a secure human/machine interface configured for enabling bi-directional communication of classified information exclusively between a user

and said secure user processor. For example, the iPhone 13 contains FaceID, which enables bi-directional communication of classified information exclusively between a user and the Secure Enclave Processor. For example, other Accused Products contain TouchID, which enables bi-directional communication of classified information between a user and the Secure Enclave Processor.

Touch ID and Face ID security

Passcodes and passwords are essential to the security of Apple devices. At the same time, users require convenient access to their devices, often more than a hundred times a day. Biometric authentication provides a way to retain the security of a strong passcode — or even strengthen the passcode or password because it need not be entered manually — while providing the convenience of swiftly unlocking with a finger press or glance. Touch ID and Face ID don't replace a passcode or password, but in most situations they do make access faster and easier.

Apple's biometric security architecture relies on a strict separation of responsibilities between the biometric sensor and the Secure Enclave, and a secure connection between the two. The sensor captures the biometric image and securely transmits it to the Secure Enclave. During enrolment, the Secure Enclave processes, encrypts and stores the corresponding Touch ID and Face ID template data. During matching, the Secure Enclave compares incoming data from the biometric sensor against the stored templates to determine whether to unlock the device or respond that a match is valid (for Apple Pay, in-app and other uses of Touch ID and Face ID). The architecture supports devices that include both the sensor and Secure Enclave (such as iPhone, iPad and many Mac systems), as well as the ability to physically separate the sensor into a peripheral that is then securely paired to the Secure Enclave in a Mac with Apple silicon.

See https://support.apple.com/en-in/guide/security/sec067eb0c9e/web.

59. Claim 1 recites "a non-secure human/machine interface distinct from said secure human/machine interface and configured for enabling bi-directional communication of unclassified information exclusively between said user and said non-secure user processor." The Accused Products comprise a non-secure human/machine interface distinct from said secure human/machine interface and configured for enabling bi-directional communication of unclassified information exclusively between said user and said non-secure user processor. For example, the iPhone 13 contains a touchscreen and related software/hardware that enables bi-

directional communication of unclassified information between the user and the Application Processor:

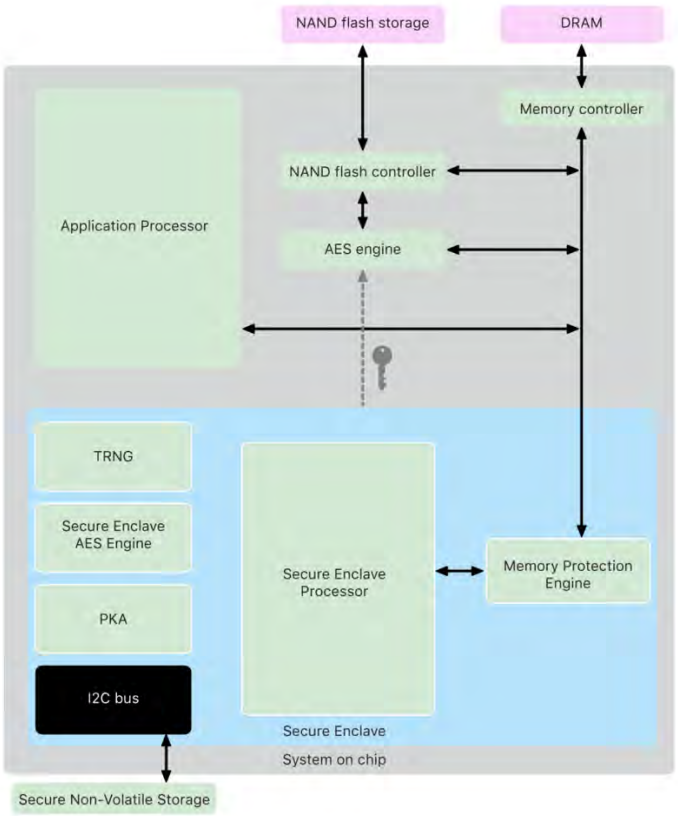

See https://support.apple.com/en-gb/guide/security/sec59b0b31ff/web.

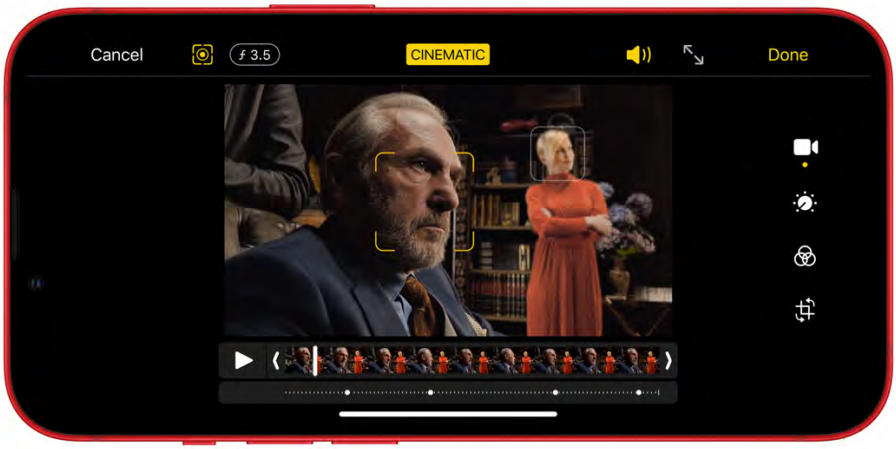

See https://www.apple.com/iphone-13/.

Both models:

HDR display
True Tone
Wide color (P3)
Haptic Touch
2,000,000:1 contrast ratio (typical)
800 nits max brightness (typical); 1200 nits max brightness (HDR)
Fingerprint-resistant oleophobic coating
Support for display of multiple languages and characters simultaneously

See https://www.apple.com/iphone-13/specs/.

60. Claim 1 recites "wherein said communications transceiver is operatively coupled to said non-secure user processor and configured for communicating data external to said portable mobile computing device." The Accused Products comprise a communication transceiver that is operatively coupled to said non-secure user processor and configured for communicating data external to said portable mobile computing device. For example, the iPhone 13 comprises a communication transceiver operatively coupled to the Application Processor and configured for communicating data to other devices:

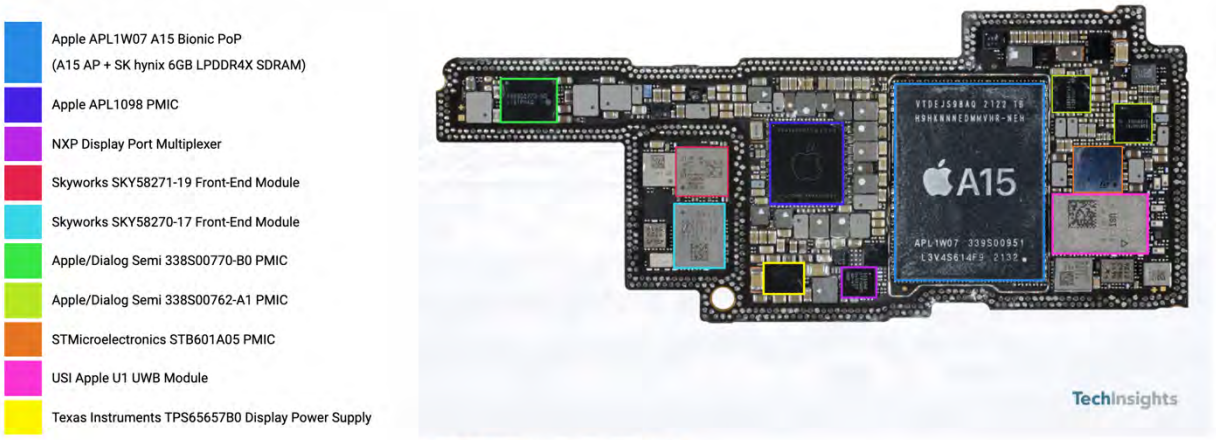

Figure 1. Apple iPhone Pro Board Shot

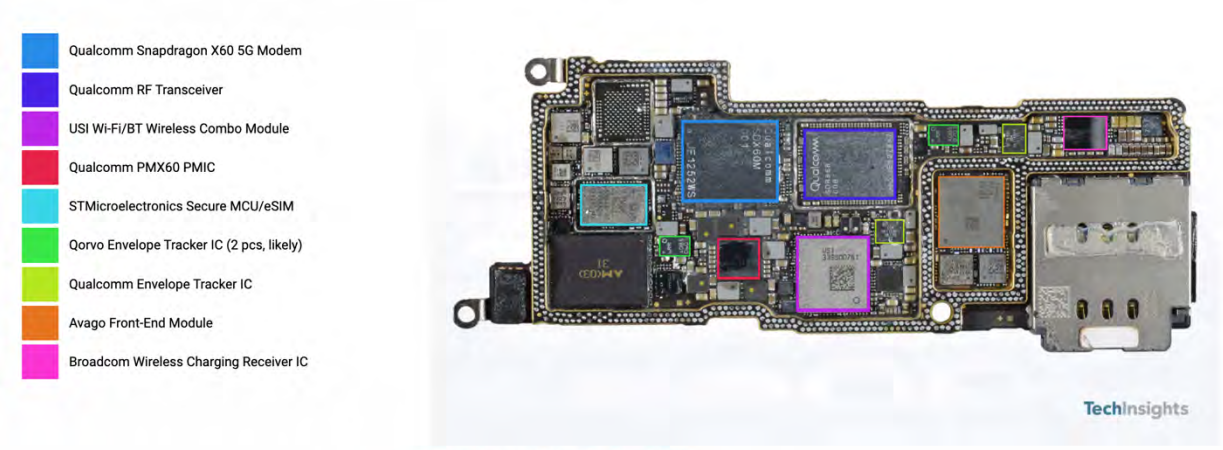

Figure 3. Apple iPhone Pro Board Shot

See https://www.techinsights.com/blog/teardown/apple-iphone-13-pro-teardown.

61. Apple also knowingly and intentionally induces infringement of one or more claims of the '399 Patent in violation of 35 U.S.C. § 271(b). At least as of the filing and service of this amended complaint, Apple has knowledge of the '399 Patent and the infringing nature of the Accused Products. Despite this knowledge of the '399 Patent, Apple continues to actively encourage and instruct its customers and end users (for example, through user manuals and online instruction materials on its website) to use the Accused Products in ways that directly infringe the '399 Patent, for example by utilizing the Secure Enclave Processor on the Accused Products in an infringing manner. *See, e.g.*, https://support.apple.com/en-gb/guide/security/sec59b0b31ff/web (Apple Platform Security – Secure Enclave); https://support.apple.com/en-gb/guide/iphone/ipha779f0c10/15.0/ios/15.0 (Apple iPhone 13 User Manual – "Use the built-in security and privacy protection of iPhone"). Further, Apple advertises to its customers and end users that the iPhone 13 uses the Application Processor and Secure Enclave Processor for an enhanced user experience that also protects personal information. *See, e.g.*, https://www.apple.com/iphone-13/. Apple further advertises and instructs its users on using TouchID and FaceID. *See, e.g.*, https://support.apple.com/en-

in/guide/security/secc5227ff3c/1/web/1 ("Uses for Touch ID and Face ID"). Apple provides these instructions and online materials knowing and intending (or with willful blindness to the fact) that its customers and end users will commit these infringing acts. Apple also continues to make, use, offer for sale, sell, and/or import the Accused Products, despite its knowledge of the '399 Patent, thereby specifically intending for and inducing its customers to infringe the '399 Patent through the customers' normal and customary use of the Accused Products.

62. Apple has also infringed, and continues to infringe, one or more claims of the '399 Patent by selling, offering for sale, or importing into the United States, the Accused Products, knowing that the Accused Products constitute a material part of the inventions claimed in the '399 Patent, are especially made or adapted to infringe the '399 Patent, and are not staple articles or commodities of commerce suitable for non-infringing use (as exemplified by the materials cited above). At least as of the filing and service of this amended complaint, Apple has knowledge of the '399 Patent and the infringing nature of the Accused Products. Apple has been, and currently is, contributorily infringing the '399 Patent in violation of 35 U.S.C. §§ 271(c) and (f).

63. By making, using, offering for sale, selling and/or importing into the United States the Accused Products, Apple has injured Plaintiff and is liable for infringement of the '399 Patent pursuant to 35 U.S.C. § 271.

64. As a result of Apple's direct infringement of the '399 Patent, Plaintiff is entitled to monetary damages (past, present, and future) in an amount adequate to compensate for Apple's infringement, but in no event less than a reasonable royalty for the use made of the invention by Apple, together with interest and costs as fixed by the Court.

65. As a result of Apple's indirect infringement of the '399 Patent (induced and contributory), Plaintiff is entitled to monetary damages (present and future) in an amount adequate

to compensate for Apple's infringement, but in no event less than a reasonable royalty for the use made of the invention by Apple, together with interest and costs as fixed by the Court.

PRAYER FOR RELIEF

WHEREFORE, Plaintiff respectfully requests that this Court enter:

a. A judgment in favor of Plaintiff that Apple has infringed, either literally and/or under the doctrine of equivalents, the '780, '779, '777, and '399 Patents;

b. A judgment and order requiring Apple to pay Plaintiff its damages (past, present, and future), costs, expenses, and pre-judgment and post-judgment interest for Apple's infringement of the '780, '779, '777, and '399 Patents;

c. A judgment and order requiring Apple to pay Plaintiff compulsory ongoing licensing fees, as determined by the Court in equity.

d. A judgment and order requiring Apple to provide an accounting and to pay supplemental damages to Plaintiff, including without limitation, pre-judgment and post-judgment interest and compensation for infringing products released after the filing of this case that are not colorably different from the accused products;

e. A judgment and order finding that this is an exceptional case within the meaning of 35 U.S.C. § 285 and awarding to Plaintiff its reasonable attorneys' fees against Apple; and

f. Any and all other relief as the Court may deem appropriate and just under the circumstances.

DEMAND FOR JURY TRIAL

Plaintiff, under Rule 38 of the Federal Rules of Civil Procedure, requests a trial by jury of any issues so triable by right.

Dated: March 22, 2022

Respectfully submitted,

/s/Brett Cooper

Brett E. Cooper (NY SBN 4011011) (Lead Counsel)
bcooper@raklaw.com
Reza Mirzaie (CA SBN 246953)
rmirzaie@raklaw.com
Marc A. Fenster (CA SBN 181067)
mfenster@raklaw.com
Seth Hasenour (TX SBN 24059910)
shasenour@raklaw.com
Drew B. Hollander (NY SBN 5378096)
dhollander@raklaw.com

RUSS AUGUST & KABAT
12424 Wilshire Blvd. 12th Floor
Los Angeles, CA 90025
Phone: (310) 826-7474
Facsimile: (310) 826-6991

Attorneys for Plaintiff Speir Technologies Limited

CERTIFICATE OF SERVICE

I hereby certify that all counsel of record are being served with a copy of the foregoing document via the Court's CM/ECF system on March 22, 2022

/s/ Brett E. Cooper
Brett E. Cooper