IN THE UNITED STATES DISTRICT COURT
FOR THE WESTERN DISTRICT OF TEXAS
WACO DIVISION

SPEIR TECHNOLOGIES LTD., Plaintiff, v. APPLE INC. Defendant.	Case No. 6:22-cv-00077-ADA **JURY TRIAL DEMANDED**

DEFENDANT'S OPENING CLAIM CONSTRUCTION BRIEF

TABLE OF CONTENTS

I. INTRODUCTION 1

II. U.S. PATENT NOS. 7,110,779AND 7,321,777 (THE RANGING PATENTS) 1

A. Overview 1

B. Disputed terms for construction 3

1. "known device latency" ('779 patent, claim 18; '777 patent, claim 1, 12, 20) 3

III. U.S. PATENT NO. 7,765,399 (THE '399 PATENT) 6

A. Overview 6

B. Disputed term for construction 6

1. "human/machine interface" (claim 1, 2, 3, 4, 5, 9) 6

2. "distinct" (claim 1, 7, 9) 10

3. "classified" / "unclassified" (claim 1, 7, 9) 15

4. "The mobile PDA computer system according to claim 1" (claim 7) 20

5. "physically secure enclosure" (claim 9) 23

IV. U.S. PATENT NO. 8,345,780 (THE '780 PATENT) 24

A. Overview 24

B. Disputed term for construction 25

1. "short term" / "long term" (claim 1, 9, 12) 25

2. "self interference" (claim 1, 9, 12) 28

V. CONCLUSION 30

TABLE OF EXHIBITS

Ex.	Description	Abbreviation
A	U.S. Patent No. 7,110,779	’779 patent
B	U.S. Patent No. 7,321,777	’777 patent
C	U.S. Patent No. 7,765,399	’399 patent
D	September 1, 2009 Office Action (’399 Patent) (excerpt) (highlighting added)	
E	April 28, 2010 Office Action Response and Terminal Disclaimer (’399 Patent) (highlighting added)	
F	U.S. Patent No. 7,779,252	’252 patent
G	November 10, 2009 Office Action Response (’399 Patent) (highlighting added)	
H	Declaration of Dr. John Black	Black Decl.
I	Webster’s II New College Dictionary definition of “classified” (highlighting added) (APL_SPEIR-EXTRINSIC_00000467-70)	Webster’s
J	The Oxford American College Dictionary definition of “classified” (highlighting added) (APL_SPEIR-EXTRINSIC_00000230-34)	Oxford
K	Speir’s Preliminary Infringement Contentions for ’399 Patent (excerpt) (highlighting added)	
L	U.S. Patent No. 8,345,780	’780 patent
M	Declaration of Dr. Robert Akl	Akl Decl.
N	July 25, 2012 Office Action Response (’780 patent) (highlighting added)	
O	Merriam-Webster Online Dictionary definition of “short term” (highlighting added) (SPEIR-APPLE-00006742-43)	
P	Dictionary.com definition of “short term” (highlighting added) (SPEIR-APPLE-00006750)	
Q	TheFreeDictionary.com definition of “long term” (highlighting added) (SPEIR-APPLE-00006764-65)	
R	Merriam-Webster Online Dictionary definition of “long term” (highlighting added) (SPEIR-APPLE-00006767-68)	
S	January 11, 2012 Office Action Response (’780 patent) (highlighting added)	

TABLE OF AUTHORITIES

Page(s)

Cases

In re Abbott Diabetes Care Inc.,
696 F.3d 1142 (Fed. Cir. 2012).....5

Aptalis Pharmatech, Inc. v. Apotex Inc.,
718 F. App'x 965 (Fed. Cir. 2018) 14

AstraZeneca AB v. Mylan Pharms. Inc.,
19 F.4th 1325 (Fed. Cir. 2021) 30

Baldwin Graphic Sys., Inc. v. Siebert, Inc.,
512 F.3d 1338 (Fed. Cir. 2008).....22

Berkheimer v. HP Inc.,
881 F.3d 1360 (Fed. Cir. 2018).....19

Chef Am., Inc. v. Lamb-Weston, Inc.,
358 F.3d 1371 (Fed. Cir. 2004).....22

Comput. Docking Station Corp. v. Dell, Inc.,
519 F.3d 1366 (Fed. Cir. 2008).....29

Datamize, LLC v. Plumtree Software, Inc.,
417 F.3d 1342 (Fed. Cir. 2005).....17, 20

DeMarini Sports, Inc. v. Worth, Inc.,
239 F.3d 1314 (Fed. Cir. 2001).....14

Eon-Net LP v. Flagstar Bancorp,
653 F.3d 1314 (Fed. Cir. 2011).....5

GE Lighting Sols., LLC v. Lights of Am., Inc.,
663 F. App'x 938 (Fed. Cir. 2016) 20

Halliburton Energy Servs., Inc. v. M-I LLC,
514 F.3d 1244 (Fed. Cir. 2008).....16, 20

Homeland Housewares, LLC v. Whirlpool Corp.,
865 F.3d 1372 (Fed. Cir. 2017), *cert. denied*, 138 S. Ct. 2602 (2018).....3

Image Processing Techs., LLC v. Samsung Elecs. Co.,
No. 2:16-CV-505, 2017 WL 2672616 (E.D. Tex. June 21, 2017) 22

Interval Licensing LLC v. AOL, Inc.,
766 F.3d 1364 (Fed. Cir. 2014)..... *passim*

KEYnetik, Inc. v. Samsung Elecs. Co.,
837 F. App'x 786 (Fed. Cir. 2020) 24

KLA-Tencor Corp. v. Xitronix Corp.,
No. A-08-CA-723, 2011 WL 318123 (W.D. Tex. 2011) 27

Liberty Ammunition, Inc. v. United States,
835 F.3d 1388 (Fed. Cir. 2016).....28

LizardTech, Inc. v. Earth Res. Mapping, Inc.,
424 F.3d 1336 (Fed. Cir. 2005).....23

Nautilus, Inc. v. Biosig Instruments, Inc.,
572 U.S. 898 (2014)..... *passim*

Nite Glow Indus. v. Cent. Garden & Pet Co.,
No. 2020-1897, 2021 WL 2945556 (Fed. Cir. July 14, 2021).....29

O2 Micro Int'l Ltd. v. Beyond Innovation Tech. Co.,
521 F.3d 1351 (Fed. Cir. 2008).....3, 7

Personalized Media Commc'ns, LLC v. Apple Inc.,
952 F.3d 1336 (Fed. Cir. 2020).....15, 29

Phillips v. AWH Corp.,
415 F.3d 1303 (Fed. Cir. 2005).....7

In re Power Integrations, Inc.,
884 F.3d 1370 (Fed. Cir. 2018).....23

Rsch. Plastics, Inc. v. Fed. Packaging Corp.,
421 F.3d 1290 (Fed. Cir. 2005).....29

Sol IP, LLC v. AT&T Mobility LLC,
No. 2:18-CV-00526-RWS(RSP), 2020 WL 60141 (E.D. Tex. Jan. 6, 2020).....22

Statutes

35 U.S.C. § 112 ¶ 2 15

I. INTRODUCTION

Defendant Apple Inc. ("Apple") respectfully submits this Opening Claim Construction brief supporting its proposed constructions for eight disputed terms. Apple's constructions comport with the claim language, specification, and file history, and reflect how a person of ordinary skill in the art would have understood the terms (if at all). In contrast, Speir contends that only one term requires construction, ignoring another that plainly lacks antecedent basis. Apple's proposed constructions track the intrinsic evidence, whereas Speir's proposals are divorced from that evidence. Accordingly, Apple asks the Court to adopt its constructions.

II. U.S. PATENT NOS. 7,110,779AND 7,321,777 (THE RANGING PATENTS)

A. Overview

The '779 patent (Ex. A) and '777 patent (Ex. B) (collectively the "Ranging Patents")[1] are directed to a wireless device locator ("WDL"). According to the patents, the claimed WDL locates a target wireless device by (1) transmitting, to the target device, a plurality of location-finding signals and (2) receiving, from the target device, corresponding reply signals. '779 patent, Abstract. The distance between the WDL and target device is estimated using the total round trip time of the signals (for sending the finding signals and receiving the reply signals) and the known latency of the target device to reply. *Id*., 7:29-35. Figure 3 illustrates the "total round trip time" for one exchange of a "location finding signal 45" and a "reply signal 46" between the WDL and TARGET device:

[1] The '777 patent is a continuation of the '779 and shares the same specification. All citations are to the '779 patent (Ex. A).

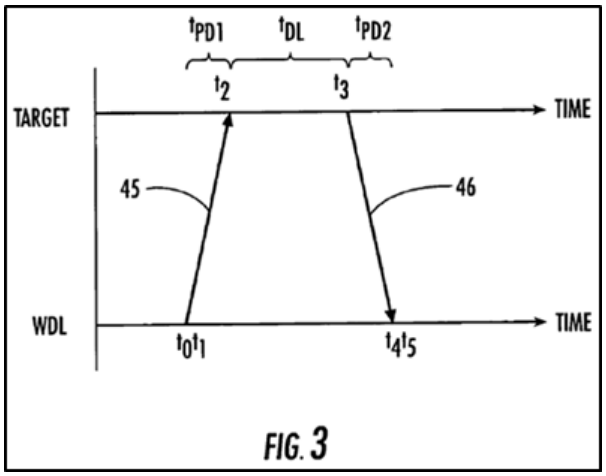

Id., Fig. 3. The "total round trip time" is composed of several components including: 1) "the propagation delay or time t_{PD1} . . . from time t_1 to t_2" accounting for the location-finding signal's time-of-flight between the WDL and target; 2) "the [actual] device latency t_{DL} . . . time t_2 to t_3)," the time it takes "to process a received signal and generate an acknowledgement reply thereto"; and 3) the "propagation delay t_{PD2} . . . from time t_3 to t_4)" accounting for the return signal's time-of-flight from the target to the WDL. *Id.*, 6:49-7:3. "Dividing the total propagation delay [t_{PD1} + t_{PD2}] by two … and multiplying this by the speed of light" gives the distance for a "stationary" target device. *Id.*, 7:29-35.

The Ranging Patents explain that, while the "controller 42" of the WDL "will not know [] the propagation delays t_{PD1}, t_{PD2} and the actual device latency t_{DL}" it "will have access to the known device latency (i.e., a mean latency) for the given device *type* of the target device 34, which provides a close approximation of the actual device latency t_{DL}." *Id.*, 7:9-15. "Accordingly, a close approximation of the total propagation delay (i.e., time t_{PD1}+time t_{PD2}) may [] be obtained by substituting the known device latency for the actual device latency t_{DL}, and subtracting this value from the time between times t_1 and t_4." *Id.*, 7:25-29.

B. Disputed terms for construction

1. "known device latency" ('779 patent, claim 18; '777 patent, claim 1, 12, 20)

Apple's Proposed Construction	Speir's Proposed Construction
"predetermined latency for the given device type of the target wireless communication device"	No construction necessary.

All asserted independent claims of the Ranging Patents recite "determining a propagation delay . . . based upon [a/the] *known device latency* of [the/said] target wireless communications device" and claims 1 and 20 of the '777 patent further recite that "each device type having a *known device latency*." Apple's proposed construction— a "predetermined latency for the given device type of the target wireless communication device"—is consistent with how the term "known device latency" is used throughout the specification, and should be adopted. *See Homeland Housewares, LLC v. Whirlpool Corp.*, 865 F.3d 1372, 1377 (Fed. Cir. 2017) ("[W]hen a patentee uses a claim term throughout the entire patent specification, in a manner consistent with only a single meaning, he has defined that term 'by implication.'" (quoting *Bell Atl. Network Servs., Inc. v. Covad Commc'ns Grp., Inc.*, 262 F.3d 1258, 1271 (Fed. Cir. 2001))), *cert. denied*, 138 S. Ct. 2602 (2018).

In contrast, Speir contends that no construction is needed. But Speir's opposition to Apple's explanation of this term's plain meaning, suggesting they believe the scope encompasses "actual device latency," demonstrates that there is a dispute that must be resolved. *See O2 Micro Int'l Ltd. v. Beyond Innovation Tech. Co.*, 521 F.3d 1351, 1360 (Fed. Cir. 2008) ("When the parties raise an actual dispute regarding the scope of the[] claims, the court, not the jury, must resolve that dispute."). The intrinsic record confirms Apple's construction for three reasons.

First, the Ranging Patents distinguish "known device latency" from "actual device latency." Referring to Fig. 3, the specification defines the "actual device latency, t_{DL}" of the

target device as "time t_2 to t_3." '779 patent, 6:62-66 ("The third component of the round trip time is the device latency t_{DL}, of the target device 34 (i.e., form time t_2 to t_3). The "actual device latency" is the time it takes the target device 34 to receive, process, and transmit a reply signal 46 responsive to the location finding signal 45."), *see also* Fig. 3 (reproduced above, showing that t_{DL} is the difference in time between the target receiving the location finding signal at time t_2 to sending the reply signal at time t_3). The Ranging Patents expressly do not use the actual device latency to determine range because the "controller [of the WDL] will not know … the actual device latency t_{DL}." *Id.*, 7:9-11. Rather, "the controller 42 will have access to the known device latency (i.e., a mean latency) for the given device type of the target device 34." *Id.*, 7:12-14.

Second, unlike the actual device latency—which can only be determined by measuring times t_2 and t_3—the specification confirms the "known device latency" is predetermined. All of the specification's examples of "known device latency" are *predetermined* values (i.e., known prior to the transmission and receipt of the ranging signals) as opposed to the actual latency of the target device. Specifically, the specification refers to the "known device latency" as "a mean latency" which provides a "close approximation of the actual device latency." *Id.*, 7:12-15. This known device latency could be "measured . . . based upon collected data," "provided by manufacturers, or . . . based upon a value set in a communications standard." *Id.*, 7:15-19.

Third, the specification ties "known device latency" to the latency generally associated with a "device type." The specification explains that "[e]ach wireless communications device . . . has a device type associated therewith" which is "important in that different device types will have known device latencies associated therewith." *Id.*, 5:6-14, *see also* 2:39-45 ("each device type may have a known device latency associated therewith."). In order for the WDL to "determine the propagation delay" using the "known device latency," the specification

explains that the WDL's controller must first know the device type. *Id.*, 10:23-29 ("If the device type (and, thus, the known device latency) are known . . . then the propagation delay . . . is determined based upon the known device latency of the target wireless communications device."), 10:34-36 ("[I]f the device type is unknown, the controller 42 may determine the device type from the reply signal (Block 119) . . . ."), Fig. 11 (showing WDL process for determining a propagation delay based on the target "device type"). Apple's proposed construction is grounded in the specification's explanations of what a "known device latency" is.

Speir's contention that no construction is necessary should be rejected because the scope of the term is disputed by the parties—namely, whether "known device latency" includes "actual device latency." To the extent that Speir argues or implies that a "known device latency" includes the actual latency of the target device (as measured from the timings of the claimed "transmission of each location finding signal and the respective reply signal therefor"), as just discussed, such an interpretation improperly contradicts the specification. *See id.*, 7:9-15, 7:20-29, 7:46-52; *see also In re Abbott Diabetes Care Inc.*, 696 F.3d 1142, 1149-50, 1342-43 (Fed. Cir. 2012) (rejecting a construction where the specification "repeatedly, consistently, and exclusively depict[s] an electrochemical sensor without" certain characteristics proposed as being within the scope of construction (citation omitted)); *Eon-Net LP v. Flagstar Bancorp*, 653 F.3d 1314, 1321 (Fed. Cir. 2011) (finding "the disputed claim terms are limited to information that originates from a hard copy document" because "[t]he written description repeatedly and consistently defines the invention as a system that processes information derived from hard copy documents.").

Accordingly, Apple's construction should be adopted.

III. U.S. PATENT NO. 7,765,399 (THE '399 PATENT)

A. Overview

The '399 patent (Ex. C) is directed to a computer architecture having a cryptographic engine that forms a bridge between a secure user processor and a non-secure user processor. '399 patent, Title, Abstract. The patent explains that conventional devices suffer from security vulnerabilities that generally prohibits "transport, processing or communication of classified data." *Id*., 1:41-67. The patent also explains that secure devices have been developed to address these problems but generally do not include "data processing or wireless communication" capabilities. *Id*., 2:1-10. The '399 patent purports to address these deficiencies by combining secure and non-secure devices (including their respective processors, human/machine interfaces, and file systems) into one device and employing a cryptographic engine between the secure and non-secure components, offering the benefits of conventional secure and non-secure devices in one. *Id*., Fig. 3, 4:37-39, 5:25-38, cl. 1.

B. Disputed term for construction

1. "human/machine interface" (claim 1, 2, 3, 4, 5, 9)

Apple's Proposed Construction	Speir's Proposed Construction
"an interface by which a user inputs information to, and receives information from, a device"	No construction necessary.

The '399 patent's independent claims 1 and 9 recite secure and non-secure "human/machine interface[s]" ("HMIs") that enable "bi-directional communication of information between a user and secure user processor" or "non-secure user processor," respectively. '399 patent, cls. 1, 9. The consistent usage of the term "human/machine interface" in the intrinsic record confirms that its plain and ordinary meaning to a POSITA is an "interface by which a user inputs information to, and receives information from, a device"—not merely one

(inputting information) or the other (outputting information). Speir, however, refuses to acknowledge this plain and ordinary meaning.

Specifically, Speir's infringement allegations for the claimed "human/machine interface" contravene that plain meaning by pointing to, at best, one half of a human/machine interface's claimed functionality—the "'biometric sensor[s]' that communicate data from the user directly and securely to the Secure Enclave." Dkt. No. 27 at 8. But the alleged HMI is not an "interface by which a user inputs information to, *and receives information from*, a device." *See id.* at 9 (Speir's allegations lacking any indication that a user receives information from the purported human/machine interfaces); 10-11 (alleging the "result" of a match "will be communicated … back to the user" but failing to recognize that the user does not receive this information by way of the alleged human/machine interface). In lights of Speir's erroneous contentions, a dispute exists between the parties regarding the term's scope which the Court must resolve. *See O2 Micro*, 521 F.3d at 1362 ("When the parties present a fundamental dispute regarding the scope of a claim term, it is the court's duty to resolve it.").

Apple's construction should be adopted because it is supported by the claim language and specification. *See Phillips v. AWH Corp.*, 415 F.3d 1303, 1314 (Fed. Cir. 2005) ("Quite apart from the written description and the prosecution history, the claims themselves provide substantial guidance as to the meaning of particular claim terms. … To begin with, the context in which a term is used in the asserted claim can be highly instructive." (citation omitted)). In relevant part, the independent claims (including claims 1, 9, and 12) all require the secure and non-secure human/machine interfaces to enable "*bi-directional*" communication of information. '399 patent., cls. 1, 9, 12. Dependent claims 2 and 4 further require the human/machine interfaces to include an "input device to allow said user to control the [non-]secure processor,"

and dependent claims 3 and 5 additionally require an "output device" to "inform said user." *Id.*, cls. 3, 5. The claims show that a human/machine interface must have bidirectional functionality—allowing the user to input information to, and receive information from, a device.

This understanding of an HMI— enabling *both* input and output of information—is also consistent with the specification, which makes clear that the term "human/machine interface" is an interface between the user and the device that allows the user to both input information to the device and receive information output from the device. For example, the '399 patent illustrates that typical PDAs have human/machine interfaces comprising "built in LCD displays, touch sensitive screens, and keypads" whether the HMI is non-secure (e.g., Fig. 1) or is secure (e.g., Fig. 2). *Id.*, 1:20-22. Indeed, Figures 1 and 2 both expressly use two-way arrows between the human/machine interfaces and their respective processors to indicate both inputting and receiving information. *Id.*, Figs. 1-2.

In contrast to a typical PDA, the claimed invention has two human/machine interfaces: a secure HMI to "communiate[] classified data to and from the secure processor" and a "non secure" HMI, so that the "non-secure processor can be controlled" and "unclassified information can be provided to the user." *Id.*, 3:4-15, cls. 1, 2. In either scenario, the specification consistently describes the human/machine interface as an interface for both input and output of information. For example, the '399 patent explains that the claimed human/machine interfaces provide for the input *and* output of data, where "[s]ecure processor 302 receives user inputs and provides information to users through a secure HMI 308."). *Id.*, 4:44-45, *see also* 4:61-62 ("Non-secure processor 306 receives user inputs and provides information to users through a non-secure HMI 310."). Figure 4 further illustrates the non-secure processor portion having a "non-secure human/machine interface 310" with both an input device (i.e., keypad/pointing

device 412) and an output device (i.e., color display 416) for enabling bidirectional communication between the user and the non-secure processor:

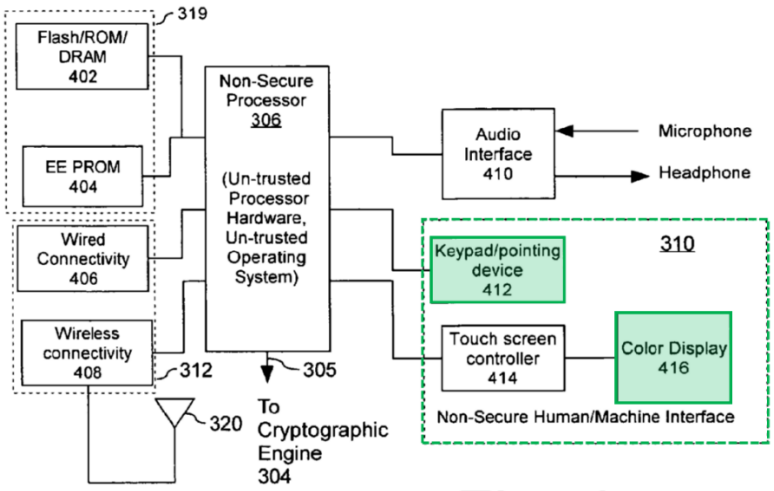

Fig. 4

Id., Fig. 4. Figure 5 similarly illustrates the secure processor portion having a "secure human/machine interface 308" with its own set of a keypad/pointing device and display for enabling *bidirectional* communication between the user and the secure processor. *Id.*, Fig. 5, 7:62-8:13. Notably, both figures also show that the audio "interface[s]" also each have a microphone as an input and a headphone as an output, again illustrating the bi-directional nature of a human/machine interface. *Id.*, Figs. 4-5; *see also*, 3:23-28, (describing an "audio interface . . . communicating audio information to and from the non-secure processor"), 6:22-37 (describing input and output of audio and audio data), 7:20-25 (same).

Speir's position that no construction is necessary, particularly given their allegations in their responsive brief to the motion to dismiss, ignores that the intrinsic evidence mandates the HMIs to provide communication of information from a user to the device and from the device to the user.

Apple's proposed construction should be adopted because it reflects the term's plain and ordinary meaning.

2. "distinct" (claim 1, 7, 9)

Apple's Proposed Construction	Speir's Proposed Construction
"physically separate"	No construction necessary.

Speir's current contention that the term "distinct" requires no construction is irreconcilable with its prior briefing in this case. Only a few months ago, Speir told this Court that with respect to the recited HMIs, the "issue of 'distinctness' is one of claim construction." Dkt. No. 27 at 9. Now that the time for claim construction has come, Speir refuses to propose any construction at all. Apple's construction should be adopted because it is mandated by the intrinsic record, including the claims, all of the embodiments in the '399 patent, and the prosecution history, where applicant's unequivocal statements to secure allowance of the claim cement that "distinct" HMIs are those which are "physically separate."

First, the claims themselves explicitly distinguish the "distinct" secure and non-secure HMIs. *See*, '399 patent, cl. 1 ("a non-secure [HMI] *distinct* from said secure [HMI]"), cl. 9 ("said non-secure [HMI] *distinct* from said secure [HMI]."). Claim 7 further describes that when one component is "distinct" from another, "physical separation" is required. *Id.*, cl. 7 ("said second file system *distinct* from said first file system so as to provide physical separation").

Second, the "physically separate" nature of the "distinct" HMIs is confirmed by the '399 specification, where all described embodiments demonstrate that the claimed "non-secure [HMI]" that is "distinct from said secure [HMI]" requires the claimed HMIs to be physically separate. The '399 patent describes two types of prior art devices, a "secure" device and "non-secure" device. *See* '399 patent, 3:49-4:36. The '399 patent illustrates both devices in Figures 1 and 2, depicting a "secure human/machine interface (HMI) 106" in the "secure" device, and "non-secure HMI 206" in the "non-secure" device:

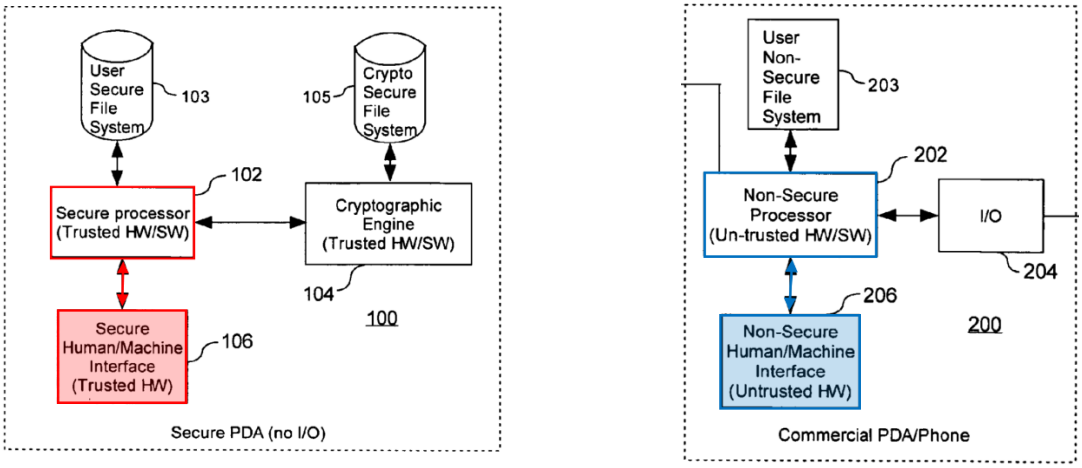

Id., Figs. 1 and 2 (annotated), 4:6-7, 4:24-26.

The purported invention of the '399 patent is then described with reference to Figure 3, which "offers the combined advantages of secure PDA 100 [of Figure 1] and commercial PDA 200 [of Figure 2]," where "[s]ecure processor 302 receives used inputs and provide information to users through a secure HMI 308," and "[n]on-secure processor 306 receives user inputs and provides information to users through a non-secure HMI 310":

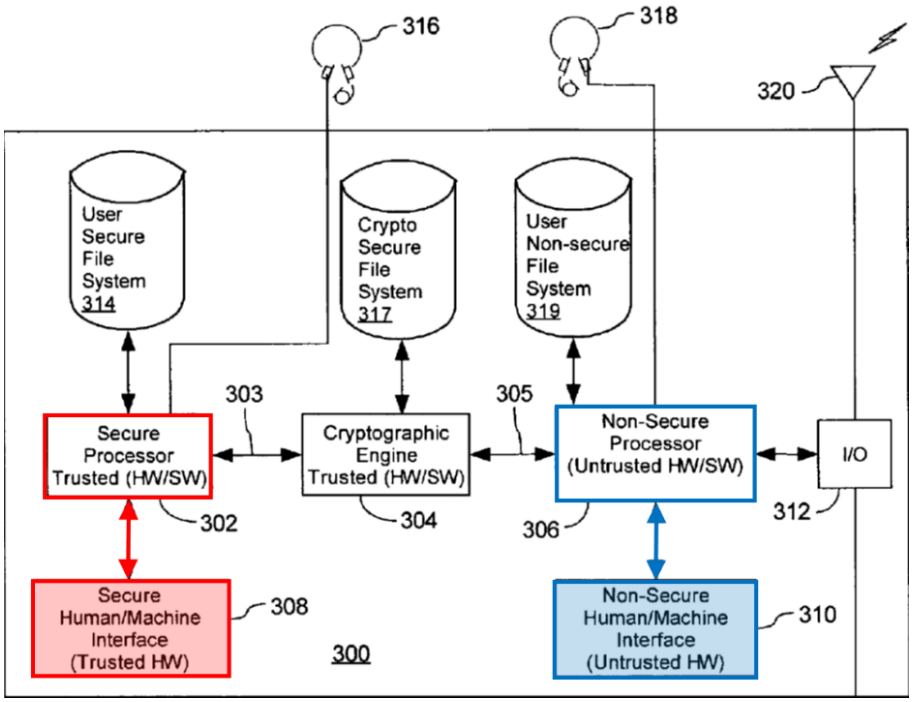

Id., Figure 3 (annotated), 4:37-39, 4:44-45, 4:61-61.

The specification emphasizes that because the "architecture" shown and described in Figure 3 "*provides for physical separation of classified data from data which is unclassified*" a user of the device is "capable of storing, processing and communicating classified as well as unclassified data." *Id*., 8:57-9:8. The '399 patent describes that in such an architecture the separation of classified and unclassified data is accomplished because "[n]on-secure processor 306 can interface with a user through non-secure HMI 310" whereas communication with the secure processor 302 is accomplished via the "secure HMI 308" which "ensure[s] trusted communications between the user and the secure processor 302." *Id*., 6:43-44, 7:40-44. Moreover, the '399 patent describes another example, illustrated in Figure 3 (above), where a user "plug[s] in a headset 316" to exchange classified audio communications using "secure processor 302," whereas "unclassified voice communications can be conducted using headset 318 and non-secure processor 306." *Id*., 9:33-37, 9:42-44. Like the HMIs, these audio interface devices are also physically separate.

Thus, in addition to the claims' use of the word "distinct" in describing one HMI being "distinct" from the other, the specification's explicit description of the patent's architecture providing "physical separation" of classified and unclassified data via distinct processors and HMIs confirms that confirms that the claimed "distinct" HMI's are physically separate.

Third, the prosecution history unequivocally confirms that the claimed secure and non-secure HMIs are "physically separate." Specifically, in order to secure allowance of the '399 patent's claims, applicant filed a terminal disclaimer to overcome a double patenting rejection over another application by the same patentee (and inventor). Ex. D (Sep. 1, 2009 Office Action) at 1-4; Ex. E (April 28, 2010 Response and Terminal Disclaimer) at 12. That patent application, filed less than one month after the '399 patent application, issued as U.S. Patent No.

7,779,252 (Ex. F) and is substantively identical to the ’399 patent, directed to the same architecture, with one important difference: a “*shared HMI*”:

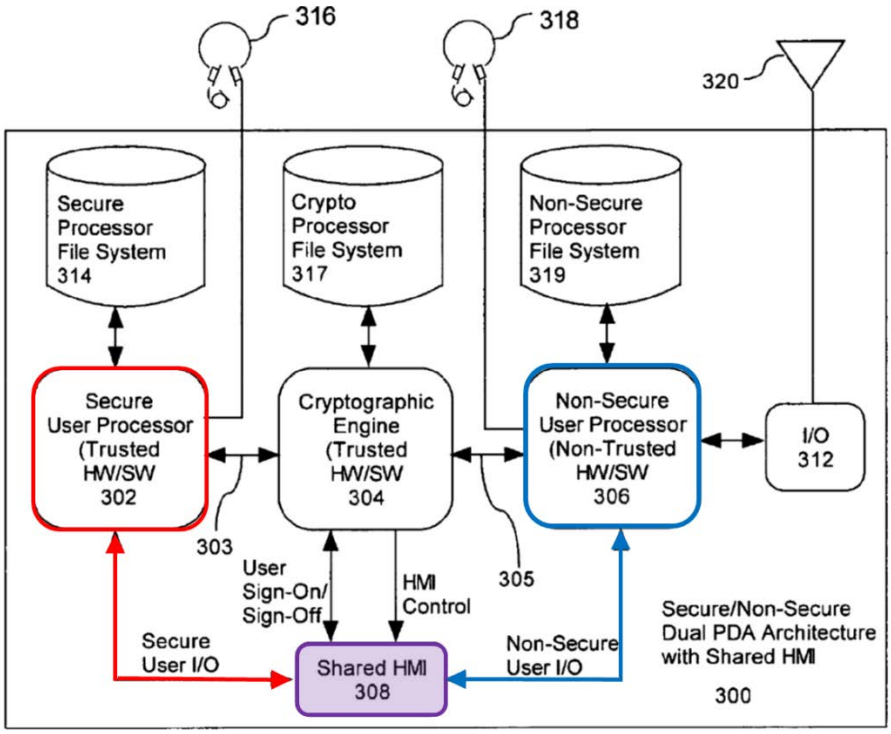

Ex. F (’252 patent), abstract, Figure 3 (annotated), *c.f.* Ex. C (’399 patent), abstract, Figure 3.

Indeed, both patents show the same “prior art” conventional devices as Figures 1 and 2, but unlike the ’399 patent’s “distinct” HMIs, the ’252 patent discloses and claims a “shared” HMI. *See* Exs. C and F, Figs. 1 and 2. In other words, the same applicant filed a separate patent at almost the same time, directed to the same “architecture for a mobile PDA computer system 300 that offers the combined advantages of PDA 100 and commercial PDA 200,” but this time, the “secure processor 302 and non-secure user processor 306 *can each receive user inputs and provide information to users through the shared HMI 308*.” Ex. F (’252 patent), 4:63-65, 5:51-53. That the same applicant filed a separate patent application (within a month of filing the ’399 patent application) for substantively the same invention but with a “shared” HMI (as opposed to two that are “distinct”) confirms that the ’399 patent’s “distinct” HMIs must be “physically

separate" and not the shared HMI of the '252 patent.

Moreover, applicant amended the claims of the '399 patent to explicitly recite "said non-secure human/machine interface *distinct* from said secure human/machine interface." Ex. G at 3-5. Applicant argued that in light of this amendment, in the '399 patent, a user "has direct access and control of an unsecure and secure data processor via *distinct unsecure and secure human/machine interfaces*," whereas the prior art "fails to disclose and/or suggest a portable mobile computing device comprising *two (2) distinct human/machine interfaces each configured to* provide a user with access and control of a respective one of an unsecure and secure user processor." *Id*, at 11-12. In response to a subsequent rejection, applicant again argued that, "[i]n contrast [to the prior art], bi-directional communication between a user . . . and a secure processor is *exclusively* enabled via a secure [HMI] *that is distinct* from an unsecure [HMI]. Ex. E (April 28, 2010 Response and Terminal Disclaimer) at 12. Applicant emphasized this "important distinction" because "a secure [HMI] interface that is [] *distinct* from an unsecure [HMI]" enables communication of "sensitive information" "adequate for national security related applications." *Id*.

Speir cannot dispute that these "express representations made in obtaining the patent regarding the scope and meaning of the claims" put beyond doubt that the '399 patents "distinct" HMIs are "physically separate" HMIs. *DeMarini Sports, Inc. v. Worth, Inc.*, 239 F.3d 1314, 1323 (Fed. Cir. 2001). And this Court need not find any "disclaimer" or "disavowal" of claim scope because applicant's repeated statements during prosecution re-affirm what a POSITA would have already understood the '399 patent's claims to require. *See Aptalis Pharmatech, Inc. v. Apotex Inc.*, 718 F. App'x 965, 971 (Fed. Cir. 2018) ("Accordingly, even in the absence of a clear and unmistakable disavowal, . . . the prosecution history can be evaluated to determine how

a person of ordinary skill would understand a given claim term."); *Personalized Media Commc'ns, LLC v. Apple Inc.*, 952 F.3d 1336, 1340 (Fed. Cir. 2020) ("[A]n applicant's repeated and consistent remarks during prosecution can define a claim term by demonstrating how the inventor understood the invention. Similarly, an applicant's amendment accompanied by explanatory remarks can define a claim term by demonstrating what the applicant meant by the amendment." (internal citation omitted)).

Accordingly, Apple's construction should be adopted.

3. "classified" / "unclassified" (claim 1, 7, 9)

Apple's Proposed Construction	Speir's Proposed Construction
Indefinite Alternatively: "information designated as [implicating / not implicating] matters of national security"	No construction necessary.

Claims 1 and 9 of the '399 patent (and all claims dependent therefrom) are indefinite under pre-AIA 35 U.S.C. § 112 ¶ 2. As previously discussed, the asserted independent claims recite two "distinct" human/machine interfaces (HMIs): a "secure" HMI that enables "communication of *classified* information exclusively between a user and said secure user processor" and a "non-secure" HMI that enables "communication of *unclassified* information exclusively between said user and said non-secure user processor." Ex. C ('399 patent), cls 1, 9.

The claims' use of subjective terms without "objective boundaries for those of skill in the art" renders them indefinite. *Interval Licensing LLC v. AOL, Inc.*, 766 F.3d 1364, 1371, 1373 (Fed. Cir. 2014). Like in *Interval Licensing*, where displaying content in an "unobtrusive manner" was "highly subjective," the terms "classified" and "unclassified" too are subjective, "lack [] objective boundaries," and are indefinite because their scope depends "on the unpredictable vagaries of any one person's opinion." *Id*. at 1371 (quoting *Datamize, LLC v.*

Plumtree Software, Inc., 417 F.3d 1342, 1350–51 (Fed. Cir. 2005)). Indeed, the claims require determining whether information is or is not "classified"—an inherently subjective evaluation—but the intrinsic record provides no guideposts or criteria for making that determination, failing to inform a POSITA about the scope of the claims. Ex. H (Black Decl.), ¶¶ 43-47; *see Nautilus, Inc. v. Biosig Instruments, Inc.*, 572 U.S. 898, 901 (2014) ("[A] patent is invalid for indefiniteness if its claims, read in light of the specification delineating the patent, and the prosecution history, fail to inform, with reasonable certainty, those skilled in the art about the scope of the invention."). Thus, a "zone of uncertainty" exists that renders these claims indefinite. *Id*. at 899 ("[A] patent must be precise enough to afford clear notice of what is claimed, . . . in a manner that avoids '[a] zone of uncertainty . . . .'" (citations omitted)).

First, the claims of the '399 patent provide no guidance to a POSITA regarding how to determine (or who determines) whether information is "classified" or "unclassified." While the claims recite that classified and unclassified information is communicated, stored, encrypted, decrypted, and/or processed, the claims provide no objective measure as to what information is "classified" and is *not*. This distinction is critical, however, because the claims require that "classified" information must be communicated over only the "secure" HMI whereas "unclassified" information must be communicated over only the "non-secure" HMI. *See* '399 patent, cls. 1, 9. Failing to establish this distinction, the public notice function of the patent's claims is frustrated—what activity may or may not infringe these claims is unclear. Ex. H (Black Decl.), ¶ 48; *see Halliburton Energy Servs., Inc. v. M-I LLC*, 514 F.3d 1244, 1249 (Fed. Cir. 2008) ("Because claims delineate the patentee's right to exclude, the patent statute requires that the scope of the claims be sufficiently definite to inform the public of the bounds of the protected invention, i.e., what subject matter is covered by the exclusive rights of the patent.").

Second, the few passages of the ’399 specification that even refer to “classified” or “unclassified” fail to provide any “objective boundaries for those skilled in the art” as to what type of information is classified, instead providing only subjective and uncertain explanations that compound the “zone of uncertainty” of these indefinite claims. *Interval Licensing*, 766 F.3d at 1371; *Nautilus*, 572 U.S. at 899; Ex. H (Black Decl.), ¶¶ 49-52.

For example, the specification first explains that conventional devices are “inadequate for managing information that is of a Confidential, Secret, or Top Secret nature, particularly when such information relates to matters of national security,” because they “may not be sufficiently trustworthy for handling *this type of information*.” ’399 patent, 1:42-52. To the extent a POSITA assumes the passage implies a description of what “classified” information could be, a POSITA would still have no reasonable certainty as to the scope of the term—instead, left to wonder what type of information is of a Confidential “nature” or may “relate” to national security. Ex. H (Black Decl.), ¶ 50. Indeed, such speculation only confirms that even if “this type of information” pertains to the claimed “classified information,” the term remains highly subjective, its scope depending on the “the unpredictable vagaries of any one person’s opinion.” *Datamize*, 417 F.3d 1342 at 1350–51.

The specification then states that “devices have been developed that are specifically designed to allow for transport of *classified data*, for example encryption keys. However, these devices are not generally designed to accommodate data processing or wireless communications of *classified information*.” ’399 patent, 2:2-6. But this disclosure merely distinguishes classified data (which was transported on traditional devices) from the classified information (that must be processed on an improved device), telling a POSITA nothing about what actually constitutes that

classified information.[2] The patent's sole example of "encryption keys" being classified data does not resolve this uncertain claim scope. *See Nautilus*, 572 U.S. at 911 ("It cannot be sufficient that a court can ascribe *some* meaning to a patent's claims[.]")

Other passages in the in the specification further confirm the lack of any objective measure for these subjective terms—repeatedly equating "classified" information with "any data of a sensitive nature." *See* '399 patent, 8:53-65 (to ensure secure handling of "classified as well as unclassified data," the patent states that "*any data of a sensitive nature* that is transferred from the secure processor to the cryptographic engine 304 must be encrypted before being transferred to the non-secure processor."); 9:2-8 (to provide "secure access to *sensitive files*" "data of a *sensitive nature*"). 6:63-7:2 (describing techniques to protect "*sensitive/classified* information" in the secure processor); 9:13-20 (describing how "data this is of a *sensitive nature*" can be transmitted to the non-secure processor via encryption). But what data is or is not of a sensitive nature remains a subjective inquiry, and the patent fails to provide any objective boundary for a POSITA. Ex. H (Black Decl.), ¶ 52; *see Interval Licensing*, 766 F.3d at 1371 (claim is indefinite when it fails to provide any "objective boundaries for those skilled in the art.").

Third, the prosecution history fails to resolve the claims' zone of uncertainty. During

[2] Indeed, this reference to encryption keys only confuses the issue. *See, e.g.*, *Interval Licensing*, 766 F.3d at 1374 ("With this lone example, a skilled artisan is still left to wonder what other forms of display are unobtrusive and non-distracting."). The '399 patent recognized that "encryption technology," which necessarily relies on encryption keys, was an inadequate security measure for handling the "type of information" that is of a "confidential nature" or relates to "matters of national security." '399 patent, 1:42-52. While an encryption key may be used to protect (i.e., encrypt or decrypt) that type of information, an encryption key is not information that is of itself a "matter of national security." Nor is an encryption key necessarily secret or "confidential." Public Key Cryptography is a cryptography technique used for encryption and relies on a pair of encryption keys, one of which is a "public key"—i.e., an encryption key that is shared with others and not kept as a closely guarded secret. Thus, the patent's example of "encryption keys" as "classified data" provides no guidance, serving only to further confuse a POSITA as to the scope of the claims. Ex. H (Black Decl.), ¶ 51.

prosecution, applicant again, repeatedly, analogized "classified" to "sensitive," arguing that the prior art did not provide "secure access to *sensitive files* via a secure human/machine interface and a secure user processor." Ex. G (November 10, 2009 Office Action Response) at 11; *see also* Ex. E (April 28, 2010 Office Action Response and Terminal Disclaimer) at 12. (emphasizing that the distinct HMI that communicates with the secure processor ensures the "security of '*sensitive information*' . . . at a level that is adequate for national security related applications."). But rather than provide a workable *objective* standard, the prosecution history reinforces the terms' subjective nature: information that is somehow "sensitive" or related to "national security."[3] Ex. H (Black Decl.), ¶¶ 53-55.

The law is clear—that *some* meaning can be ascribed to a term is not enough. *See Nautilus*, 572 U.S. at 911. The claims and remaining intrinsic evidence "must provide objective boundaries for those of skill in the art." *Interval Licensing*, 766 F.3d at 1371. "[T]here is an indefiniteness problem if the claim language might 'mean several different things and no informed and confident choice is available among the contending definitions.'" *Id.* (citing and quoting *Nautilus*, 572 U.S. at 911 & n.8).[4]

---

[3] Apple's proposed alternative construction—"information designated as [implicating / not implicating] matters of national security"—captures the only plausible *objective* standard by which a POSITA could determine the scope of the claims with reasonable certainty. Ex. H (Black Decl.), ¶ 57. This proposed construction is not subjective (because the information has been "designated"), comports with the intrinsic evidence, and reflects the common understanding of "classified" information based on the extrinsic evidence. *See e.g.*, '399 patent, 1:49-50 ("information [that] relates to matters of national security"); Ex. E at 12 ('sensitive information' . . . at a level that is adequate for national security related applications.); Ex. I (Webster's) at 212 (defining classify (classified) as "To designate (e.g., a document) as secret and available only to authorized persons"); Ex. J (Oxford) at 256 (defining classify as "designate (of information or documents) as officially secret or to which only authorized people may have access.").

[4] Indeed, the Federal Circuit has repeatedly held claims that recite subjective terms or terms of degree indefinite unless there is disclosure of adequate objective boundaries. *See, e.g.*, *Interval Licensing*, 766 F.3d at 1373-74; *Berkheimer v. HP Inc.*, 881 F.3d 1360, 1363 (Fed. Cir. 2018) (finding "minimal redundancy" indefinite where specification used "inconsistent terminology to

Here, the few suggestions offered in the '399 patent's specification as to what might be "classified" or "unclassified" remain highly subjective and fail to provide the necessary definitive criteria by which a POSITA could determine the scope of the claims with reasonable certainty. As the Supreme Court and Federal Circuit have made clear, that a POSITA can "ascribe *some* meaning" to the terms is not sufficient when, like here, the intrinsic record "does not provide a reasonably clear and exclusive definition, leaving the facially subjective claim language without an objective boundary." *Nautilus*, 572 U.S. at 911; *Interval Licensing*, 766 F.3d at 1373; Ex. H (Black Decl.), ¶ 56. These claims are indefinite because their scope depends "on the unpredictable vagaries of any one person's opinion." *Interval Licensing*, 766 F.3d at 1371.

4. "The mobile PDA computer system according to claim 1" (claim 7)

Apple's Proposed Construction	Speir's Proposed Construction
Indefinite	No construction necessary.

Dependent claim 7 is indefinite because there is no "mobile PDA computer system" recited in claim 1, nor is any antecedent basis reasonably ascertainable by "implication." *See Halliburton Energy Servs.*, 514 F.3d at 1249 ("[A] claim could be indefinite if a term does not have proper antecedent basis where such basis is not otherwise present by implication or the meaning is not reasonably ascertainable." (citations omitted)).

---

describe the level of redundancy that the system achieves"); *GE Lighting Sols., LLC v. Lights of Am., Inc.*, 663 F. App'x 938, 940-41 (Fed. Cir. 2016) (finding "elongated" core indefinite because distinguishing two references as not having elongated cores still left an "unresolved ambiguity as to how the prior art elements are not considered to be 'elongated'"); *Halliburton Energy Servs.*, 514 F.3d at 1247 (finding "fragile gel" indefinite where definitions in the specifications such as "easily transitions," "easily disrupted or thinned," "less gel-like," and "minimum pressure, force, and time" were "too subjective and unclear"); *Datamize*, 417 F.3d at 1350–56 (finding "aesthetically pleasing" indefinite where specification "fail[ed] to provide any objective way to determine whether the look and feel of an interface screen is 'aesthetically pleasing.'").

First, there is no explicit antecedent for the "mobile PDA computer system according to claim 1" because there is no "mobile PDA computer system" in claim 1, which instead recites "A computer system, comprising: a portable mobile computing device . . . ."

Second, no antecedent basis is reasonably ascertainable by "implication." Whether claim 7's "mobile PDA computer system" might find antecedent basis by implication in claim 1's "computer system" or claim 1's "portable mobile computing device" remains unclear. Claim 7's "mobile PDA *computer system*" might implicate *either* claim 1's recitation of a "computer system," or claim 1's recitation of "a portable *mobile* computing device."

Moreover, claim 7's recitation of two "distinct" file systems "*within said portable mobile computing device*" fails to provide any reasonable certainty as to whether claim 7 is describing additional requirements of the "computer system" of claim 1, or the "portable mobile computing device" of claim 1. '399 patent, cl. 7. Specifically, independent claim 1 recites, in relevant part:

> 1. A computer system, comprising:
>
> a portable mobile computing device including a secure user processor, a non-secure user processor, a communications transceiver, and a cryptographic engine;
>
> a first data communication link . . .
>
> a second data communication link . . .
>
> a secure human/machine interface . . . ; and
>
> a non-secure human/machine interface . . . .

'399 patent, cl. 1.

But it remains ambiguous as to whether claim 7 introduces additional requirement of clam 1's "computer system" (i.e., the computer system further comprising the file systems) or additional requirements of claim 1's "portable mobile computing" (i.e., the device including the

file systems) such that the file system provide separation "within" the portable mobile computing device. Because it is "unclear as to what element [of claim 1] the limitation of [claim 7] is making reference" to, this claim lacks antecedent basis. *Baldwin Graphic Sys., Inc. v. Siebert, Inc.*, 512 F.3d 1338, 1343 (Fed. Cir. 2008) (quoting MPEP § 2173.05(e) as describing the need for claims to have "proper antecedent bases"). Attempting to find antecedent basis by implication is further frustrated by the claim 7's use of the acronym "PDA" (which means "personal digital assistant" (*see* '399 patent, 1:12-13)), because there is no "PDA" or "personal" or "digital" or "assistant" recited in claim 1 from which claim 7 might find antecedent basis by implication with reasonable certainty. '399 patent, cl. 7; Ex. H (Black Decl.), ¶ 59.

Faced with this, Speir's proposal of no construction, particularly in light of the lack of antecedent on the face of the claim, must be rejected. *See Image Processing Techs., LLC v. Samsung Elecs. Co.*, No. 2:16-CV-505, 2017 WL 2672616, at *32 (E.D. Tex. June 21, 2017) ("Plaintiff's 'plain meaning' construction does not help and does not address the lack of antecedent issue[.]"). While it is generally improper for the Court to redraft ambiguous claims, the Court should be especially reluctant to do so here when Speir insists that no construction is required at all. *See Chef Am., Inc. v. Lamb-Weston, Inc.*, 358 F.3d 1371, 1374 (Fed. Cir. 2004) ("[C]ourts may not redraft claims, whether to make them operable or to sustain their validity."); *Sol IP, LLC v. AT&T Mobility LLC*, No. 2:18-CV-00526-RWS(RSP), 2020 WL 60141, at *10 (E.D. Tex. Jan. 6, 2020) ("There is no antecedent basis for either term . . . and it would be improper for the Court to the redraft the [claims].").

Accordingly, Apple respectfully requests this Court find claim 7 invalid as indefinite.

5. "physically secure enclosure" (claim 9)

Apple's Proposed Construction	Speir's Proposed Construction
"an enclosure that detects physical tampering, intrusion, or unauthorized access"	No construction necessary.

There is a dispute between the parties as to the scope of this term in light of the intrinsic evidence. Speir contends the scope of this term includes a removable cover of a mobile device as a "physically secure enclosure." *See* Ex. K at 65 (Speir's infringement contentions showing a picture of an iPhone with the back cover removed as evidence of a "physically secure enclosure"). The intrinsic evidence requires more, however, explaining that prior art devices such as "smart phones" are vulnerable to intrusion because they do not "employ physical tamper detection." '399 patent, 1:12-16, 1:59-62. A "physically secure enclosure" must require something more than the conventional physical barriers or components that fail to detect attempts to tamper or breach the security of the device. *See LizardTech, Inc. v. Earth Res. Mapping, Inc.*, 424 F.3d 1336, 1343–44 (Fed. Cir. 2005) ("[I]t would be peculiar for the claims to cover prior art that suffers from precisely the same problems that the specification focuses on solving."). Apple's proposed construction captures the meaning of what the '399 patent describes as a "physically secure enclosure."

"[A] proper claim construction analysis endeavors to assign a meaning to a disputed claim term "that corresponds with ... how the inventor describes his invention in the specification." *In re Power Integrations, Inc.*, 884 F.3d 1370, 1376-77 (Fed. Cir. 2018) ("finding a construction that included a "bulky" component was "unduly broad" and "inconsistent with the [] patent's focus on minimizing circuit size."). Here, the '399 patent's purportedly inventive architecture offers "several important advantages" that "overcome some limitations of conventional" devices—i.e., those without physical tamper detection. '399 patent, 5:25-28. The

’399 patent strives to overcome the “limitations of conventional secure and non-secure” devices by offering “all of the benefits of conventional” devices while at the same time permitting users to “access [] a secure file system . . . maintained by the secure processor,” accomplished by the “secure” HMI which “can provide a trusted path to applications executing on the secure processor.” *Id*., 5:25-39, 7:44-45. The ’399 patent describes the use of a “physical barrier that will detect any attempt to open the enclosure and automatically zeroize any stored sensitive/classified information contained within.” *Id*., 6:63-66. The ’399 patent further describes that the secure HMI “can prevent invasive or unauthorized applications from monitoring user inputs and system outputs,” which can be accomplished by a “shielded enclosure.” *Id*., 7:45-50.

Apple’s construction should be adopted because it properly captures the term’s scope by excluding conventional tabs, screws, glue, or other features of prior art devices that fail to prevent or detect security breaches—i.e. “physical tampering, intrusion, or unauthorized access”—of the device and its secure HMI. *See KEYnetik, Inc. v. Samsung Elecs. Co.*, 837 F. App’x 786, 793 (Fed. Cir. 2020) (finding a construction that is “inconsistent with—and indeed, would eviscerate—the purpose of the invention” as “unreasonably broad and incompatible with the purpose of the claimed invention.”).

IV. U.S. PATENT NO. 8,345,780 (THE ’780 PATENT)

A. Overview

The ’780 patent (Ex. L) is directed to wireless communication systems in which a wireless communications device adjusts for interference by determining a type of encountered interference, and then setting a characteristic of a link to adjust for the interference based on the interference type. ’780 patent, Abstract, 1:7-9, 2:32-34, 44-52, Fig 2.

The ’780 patent describes determining a type of interference from a plurality of types of interferences that include: (1) wideband interference, (2) narrowband interference, and (3) self-interference. *Id.*, 2:44-58, 4:41-51, Fig. 1 (28a, 28b, 28c), Fig. 2 (step 40) (right). The claimed wireless device stores characteristics of past received signals and compares characteristics of a received signal with the stored characteristics to determine the type of interference (i.e., wideband, narrowband, or self-interference). *Id.*, 4:20-59, Fig. 2 (step 40).

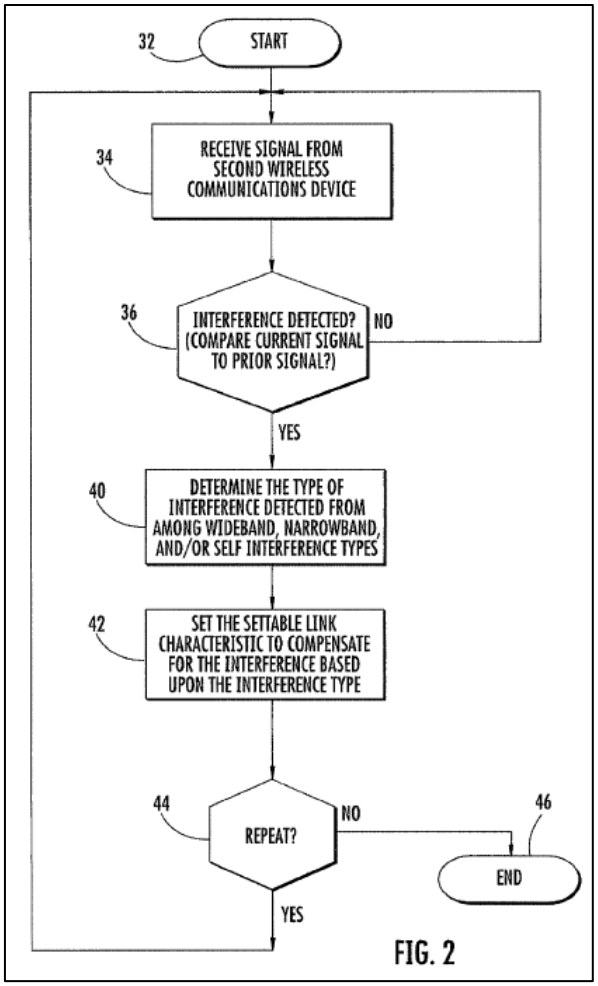

FIG. 2

In particular, the wireless device leverages information about the specific type of interference to compensate for the determined type of interference by changing settings of the wireless link between the wireless device and another wireless device to mitigate the specific type of interference between the two devices. *Id.*, 2:44-52, 5:38-40, 48-52, Fig. 2 (step 44).

B. Disputed term for construction

1. “short term” / “long term” (claim 1, 9, 12)

Apple’s Proposed Construction	Speir’s Proposed Construction
Indefinite Alternatively: “short term”: “on the order of seconds”; “long term”: “on the order of weeks, or greater”	No construction necessary.

The terms “short term” and “long term” are terms of degree. To evaluate “purely subjective” claim terms, courts “must look to the written description for guidance.” *Interval*

Licensing, 766 F.3d at 1371. When, like here, the intrinsic record fails to provide a "reasonably clear and exclusive definition" and the "facially subjective claim language" is left "without an objective boundary," the claims are indefinite. *Id.*, at 1373; Ex. M (Akl Decl.) at ¶¶ 37-43. For example, "short term" is relative: this could refer to any period of time ranging from seconds up to years, so long as such period is subjectively short (e.g., "short term" could encompass the entire humanoid existence, compared to the overall age of the earth, but this would indisputably be "long term" compared to an individual's lifespan). Ex. M (Akl Decl.) at ¶ 38.

The specification of the '780 patent does not salvage the indefiniteness of these terms because it fail to provide the necessary boundaries of "short term" and "long term," as recited in the claims of the '780 patent for determining a type of interference. The '780 patent discloses that "history is broken into **short term (seconds)** 53, medium term (hours/days) 54, and **long term (weeks/months)** 55." '780 patent, 4:34-36. But this does not answer the question of whether minutes would be short term or medium term. Or whether 7 days would be medium term or long term. Because these terms of degree possess no discernable boundary, they are indefinite. Ex. M (Akl Decl.) at ¶¶ 38-40.

The prosecution history of the '780 patent does not provide any additional clarity either. Applicant amended the claims to add the limitations reciting "short term and long term historical characteristics" in order to overcome a prior art rejection by the Examiner, but did not provide any insight into the meaning of the terms, other than a citation to the passage cited above. Ex. N (July 25, 2012 Office Action Response) at pp. 2-6, 9 (citing to "paragraphs 28-29 ['780 patent 4:20-40]" to support an amendment of among other things "stor[ing] short term and long term historical characteristics of interference.").

Thus, with this minimal disclosure in the '780 patent's intrinsic record, a POSITA would

have little guidance as to the boundaries between short, medium, and long term when determining a type of interference as required by the '780 patent claims. At best, Apple's proposed alternative construction seeks to put the loosest boundaries around these indefinite terms, attempting to inject an "objective standard" for knowing how short is "short term" and how long is "long term." If these constructions do not apply, the terms must be found indefinite. Ex. M (Akl Decl.) at ¶¶ 40-41; *see KLA-Tencor Corp. v. Xitronix Corp.*, No. A-08-CA-723, 2011 WL 318123, *3, 5 (W.D. Tex. 2011) (finding "no objective standard for determining what is meant by 'substantially maximize'" where patent failed to identify what is "close enough to be substantially maximizing").

In contrast, Speir's proposal of no construction fails to provide reasonably clear meaning for the these terms of degree. Moreover, none of Speir's cited extrinsic evidence, including a number of dictionary definitions, provides any clarity on the scope of short term and long term. Instead, they merely reiterate the terms' subjective and vague scope by referring to the same terms of degree as "short" and "long." For example, dictionary definitions for "short term" restate "occurring over or involving a relatively **short** period of time" (Ex. O); "covering or applying to a relatively **short** period of time" and "(of profit, loss, interest, etc.) of or relating to a **short** term, especially one year or less" (Ex. P); and dictionary definitions for "**long** term" merely restate "involving, maturing after, or being in effect for a **long** time" and "lasting, staying, or extending over a long time" (Ex. Q); "occurring over or involving a relatively **long** period of time seeking **long-term** solutions" (Ex. R). None of these circular definitions provide any clarity to the disputed terms. Ex. M (Akl Decl.) at ¶ 43.

To the extent Speir asserts that "short term" and "long term" should be construed according to a plain and ordinary meaning that exceeds the minimal disclosure in the '780 patent,

then the terms are indefinite. *Liberty Ammunition, Inc. v. United States*, 835 F.3d 1388, 1397 (Fed. Cir. 2016) (reversing construction by trial court that failed to "properly apply the exacting 'objective boundaries standard'" under which disputed claim terms would be indefinite). Ex. M (Akl Decl.) at ¶ 44.

2. "self interference" (claim 1, 9, 12)

Apple's Proposed Construction	Speir's Proposed Construction
"interference caused by the wireless communication device itself or by two wireless communication systems being deployed too closely together or by two wireless communication systems using the same frequency band/channel"	"interference caused by two wireless communication systems being deployed too closely together or by two wireless communication systems using the same frequency band/channel"

The parties agree that "self interference" should include at least "interference" caused by "by two wireless communication systems being deployed too closely together or by two wireless communication systems using the same frequency band/channel." The parties dispute, however, whether the term also encompasses the clearest example of "self" interference—interference from the device itself.

Consistent with the intrinsic record, a POSITA would understand that "self interference" connotes interference that is caused by a wireless device itself. Moreover, a POSITA would understand from the prosecution history, that applicant had intended "self interference" to cover interference caused by the wireless device itself. Ex. M (Akl Decl.) at ¶¶ 45-46.

In particular, to overcome prior art cited in an office action, the applicant amended the claims to recite "determining a type of the received interference from among a plurality of interference types comprising wideband interference, <u>self interference</u>, and narrowband interference." Ex. S (January 11, 2012 Office Action Response) at 2, 4-5. Applicant distinguished the cited prior art reference Aboba as not "determin[ing] whether such interference

is *self-inflicted, i.e. self-interference*, as in the claimed invention." *Id*., at 9-10 (emphasis added). Applicant's amendment and statements limit the claims to include a form of self-inflicted interference. Ex. M (Akl Decl.) at ¶ 45; *see Nite Glow Indus. v. Cent. Garden & Pet Co.*, No. 2020-1897, 2021 WL 2945556, at *11 (Fed. Cir. July 14, 2021) ("It is well established by Supreme Court cases that disclaimer can be determined from the applicant's amendment or cancellation of claims—not just from statements made by the applicant." (citations omitted)); *Rsch. Plastics, Inc. v. Fed. Packaging Corp.*, 421 F.3d 1290, 1297 (Fed. Cir. 2005) (amending claims to recite "extend to the rear end of the tube" "must be seen as an affirmative disclaimer of ribs not extending to the rear edge of the tube."); *Comput. Docking Station Corp. v. Dell, Inc.*, 519 F.3d 1366, 1374 (Fed. Cir. 2008) ("[A] patentee may limit the meaning of a claim term by . . . clearly characterizing the invention in a way to try to overcome rejections based on prior art." (citations omitted)).

Speir ignores this, focusing only on one aspect of self-interference described in the specification that provides other examples of "self interference," collocation and frequency reuse:

> Another common type of interference is self interference. Common causes of self interference may include, for example, collocation or frequency reuse. In particular, collocation may be caused by two wireless communication systems being deployed too closely together while frequency reuse may be caused by two wireless communication systems using the same frequency band/channel. '780 Patent, 1:41-47.

But in focusing exclusively on this single part of the specification, Speir impermissibly ignores the prosecution history and the understanding of a POSITA. Ex. M (Akl Decl.) at ¶¶ 44-48; *see Personalized Media Commc'ns*, 952 F.3d 1336 at 1340 ("[E]ven where 'prosecution history statements do not rise to the level of unmistakable disavowal, they do inform the claim construction.'" (quoting *Shire Dev., LLC v. Watson Pharm., Inc.*, 787 F.3d 1359, 1366 (Fed. Cir.

2015)); *AstraZeneca AB v. Mylan Pharms. Inc.*, 19 F.4th 1325, 1335 (Fed. Cir. 2021) ("We have stated that '[a]ny explanation, elaboration, or qualification presented by the inventor during patent examination is relevant, for the role of claim construction is to capture the scope of the actual invention that is disclosed, described, and patented.'" (quoting *Fenner Invs., Ltd. v. Cellco P'ship*, 778 F.3d 1320, 1323 (Fed. Cir. 2015)).

Apple's construction, which captures the scope of the term based on the specification and prosecution history, should be adopted.

V. CONCLUSION

For the foregoing reasons, Apple respectfully requests that the Court adopt its proposed constructions.

Dated: August 2, 2022

/s/ *James Travis Underwood*

James Travis Underwood
GILLAM & SMITH LLP
TX State Bar No. 24102587
102 N. College, Suite 800
Tyler, Texas 75702
Telephone: (903) 934-8450
Facsimile: (903) 934-9257
travis@gillamsmithlaw.com

James R. Batchelder (*pro hac vice*)
Stepan Starchenko
Shong Yin (*pro hac vice*)
ROPES & GRAY LLP
1900 University Avenue, 6th Floor
East Palo Alto, CA 94303-2284
Tel: 650-617-4000
Fax: 650-617-4090
James.Batchelder@ropesgray.com
Stepan.Starchenko@ropesgray.com
Shong.Yin@ropesgray.com

Joseph B. Schenker
Kevin Post *(pro hac vice)*
ROPES & GRAY LLP
1211 Avenue of the Americas
New York, NY 10036-8704
Tel: (212) 596-9000
Fax: (212) 596-9090
Kevin.Post@ropesgray.copm
Josef.Schenker@ropesgray.com

Allen S. Cross (*pro hac vice*)
Taylor J. Lawrence (*pro hac vice*)
ROPES & GRAY LLP
2099 Pennsylvania Avenue, N.W.
Washington, DC 20006
Telephone: (202) 508-4600
Facsimile: (202) 508-4650
Allen.Cross@ropesgray.com
Taylor.Lawrence@ropesgray.com

Attorneys for Defendant,
Apple Inc.

CERTIFICATE OF SERVICE

The undersigned hereby certifies that, on August 2, 2022, a true-and-correct copy of the foregoing document was served with the Court's CM/ECF system on all counsel of record.

/s/ *James Travis Underwood*
James Travis Underwood