IN THE UNITED STATES DISTRICT COURT
FOR THE WESTERN DISTRICT OF TEXAS
WACO DIVISION

OZMO LICENSING LLC, *Plaintiff,*	§	
	§	**6:21-CV-1225-ADA**
v.	§	
ACER INC. and ACER AMERICA CORP., *Defendants.*	§	

CLAIM CONSTRUCTION ORDER AND MEMORANDUM

On September 2, 2022, the Court held a hearing to determine the proper construction of the disputed claim terms. Ozmo Licensing LLC ("Plaintiff") accuses Acer Inc. and Acer America Corp. (collectively "Defendants") of infringing five patents: U.S. Patent Nos. 8,599,814 ("the '814 Patent"), 9,264,991 ("the '991 Patent"), 10,873,906 ("the '906 Patent"), 11,012,934 ("the '934 Patent"), 11,122,504 ("the '504 Patent") (collectively "the patents-in-suit"). Before the Court are the parties' claim construction briefs. Defendants filed an opening claim construction brief (Dkt. No. 26), to which Plaintiff filed a responsive claim construction brief (Dkt. No. 29), to which Defendants filed a reply brief (Dkt. No. 31), to which Plaintiff filed a sur-reply brief (Dkt. No. 32). The parties additionally submitted a Joint Claim Construction Statement (Dkt. No. 33).[1]

The Court provided preliminary claim constructions in advance of the *Markman* hearing. Having considered the parties' arguments from the hearing and those presented in their claim

[1] Citations to the parties' claim construction briefs and Joint Claim Construction Statement are to the Case Management/Electronic Case Files (Dkt. Nos.) and pin cites are to the pagination assigned through ECF.

Exhibit-1010
Unified Patents, LLC v. Ozmo Licensing LLC

construction briefs, the Court adopts its preliminary constructions to be its final constructions and enters those final constructions now.

I. OVERVIEW OF THE PATENTS-IN-SUIT

The patents-in-suit are related, each claiming priority back to a provisional patent application filed in 2005.[2] The patents-in-suit are commonly titled "Apparatus And Method For Integrating Short-Range Wireless Personal Area Networks For A Wireless Local Area Network Infrastructure." The patents-in-suit share a common specification, and as their titles suggest, the patents relate to wireless network technology. As the parties did in their briefing, the Court refers to the '814 Patent when referencing the common specification.

At a high level, the patents-in-suit relate to wireless communication technology. '814 Patent at 1:25-26. More particularly, the patents-in-suit relate to integrating short-range wireless personal area networks ("WPANs") into longer-range wireless local area networks ("WLANs"). *Id*. at 1:26-29. As examples, the patents describe Wi-Fi as a standardized WLAN protocol and Bluetooth as a standardized WPAN protocol. *Id.* at 1:49-53 and 2:25-30. The patents-in-suit realized that problems arise when WLAN and WPAN protocols co-exist in the same wireless medium. *Id*. at 2:37-44. The patents explain that "[b]ecause they use different methods of accessing the wireless medium, and are not synchronized with one another, severe interference may result when devices conforming to such standards are made to co-exist and are positioned in the same physical vicinity." *Id*.

In response to these issues, the patents-in-suit disclose an apparatus (e.g., "wireless hub") that is "adapted to facilitate seamless communication between the WLAN and the WPAN." '814

[2] Each of the patents-in-suit claims priority back to Provisional Application No. 60/661,763. All five patents-in-suit issued from a chain of continuation patent applications. Dkt. No. 26 at 6. The '814 Patent has the earliest filing date of the patents-in-suit.

Exhibit-1010
Unified Patents, LLC v. Ozmo Licensing LLC

Patent at 5:49-51; *see also* 4:30-33. As one example, FIG. 3 illustrates a WPAN **10** integrated with WLAN **6** to form an integrated network **5**. *Id*. at 4:63-65.

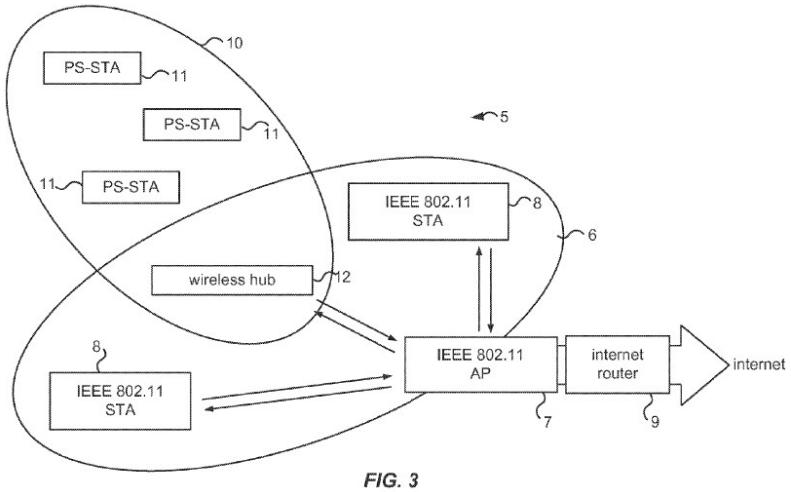

FIG. 3

The patents disclose that WLAN **6** is a conventional Wi-Fi network compliant with the 802.11x specification. '814 Patent at 4:66–5:3. WPAN **10** is described as a short-range wireless network with a typical range of about 30 feet. *Id*. at 6:3-4, 9:36-39.

The patents describe wireless hub **12** as having a wireless 802.11x-compliant circuit that can communicate with an access point (AP **7**) disposed in WLAN **6** as well as with power sensitive stations (PS-STAs **11**) disposed in WPAN **10**. '814 Patent at 5:51-54. That is, the wireless hub **12** is adapted to connect to both networks to facilitate seamless communication between WLAN **6** and WPAN **10**. *Id*. at 5:49-51, 7:3-5. In one implementation, the wireless hub **12** connects to the WPAN without losing connectivity to the WLAN. *Id*. at 3:49-52, 7:5-9. In another implementation, the wireless hub **12** connects to the WLAN and WPAN alternately. *Id*. at 3:52-54, 7:9-11.

Representative independent claim 1 of the ’814 Patent is reproduced below with its disputed terms emphasized in italics:

> 1. A network-enabled hub, usable for facilitating data communications between two or more wireless devices that are configured to communicate indirectly with each other via the network-enabled hub, comprising:
> an interface to a wireless radio circuit that can send and receive data wirelessly, providing the hub with bi-directional wireless data communication capability;
> *logic for processing data received via the wireless radio circuit*;
> *logic for generating data to be transmitted by the wireless radio circuit*;
> *logic for initiating and maintaining wireless network connections with nodes of a wireless network external to the network-enabled hub, maintaining at least a first wireless network connection using a first wireless network protocol and a second wireless network connection using a second wireless network protocol, that can be maintained, at times, simultaneously with each other in a common wireless space,* wherein the second wireless network protocol is an *overlay protocol* with respect to the first wireless network protocol in that communications using the second wireless network protocol are *partially consistent* with the first wireless network protocol and at least some of the communications using the second wireless network protocol impinge on at least some antennae used for the first wireless network; and
> *data forwarding logic*, implemented in the network-enabled hub using hardware and/or software, that forwards data between an originating node and a destination node, wherein the originating node is a node in one of the *first and second wireless networks* and the destination node is a node in the other of the *first and second wireless networks*.

’814 Patent at 14:45–15:10 (claim 1, emphasis added).

II. LEGAL PRINCIPLES

A. Claim Construction

“It is a ‘bedrock principle’ of patent law that ‘the claims of a patent define the invention to which the patentee is entitled the right to exclude.’” *Phillips v. AWH Corp.*, 415 F.3d 1303, 1312 (Fed. Cir. 2005) (en banc) (quoting *Innova/Pure Water Inc. v. Safari Water Filtration Sys.,*

Exhibit-1010
Unified Patents, LLC v. Ozmo Licensing LLC

Inc., 381 F.3d 1111, 1115 (Fed. Cir. 2004)). To determine the meaning of the claims, courts start by considering the intrinsic evidence. *Id.* at 1313; *C.R. Bard, Inc. v. U.S. Surgical Corp.*, 388 F.3d 858, 861 (Fed. Cir. 2004); *Bell Atl. Network Servs., Inc. v. Covad Commc'ns Grp., Inc.*, 262 F.3d 1258, 1267 (Fed. Cir. 2001). The intrinsic evidence includes the claims themselves, the specification, and the prosecution history. *Phillips*, 415 F.3d at 1314; *C.R. Bard, Inc.*, 388 F.3d at 861. The general rule—subject to certain specific exceptions discussed *infra*—is that each claim term is construed according to its ordinary and accustomed meaning as understood by one of ordinary skill in the art at the time of the invention in the context of the patent. *Phillips*, 415 F.3d at 1312-13; *Alloc, Inc. v. Int'l Trade Comm'n*, 342 F.3d 1361, 1368 (Fed. Cir. 2003); *Azure Networks, LLC v. CSR PLC*, 771 F.3d 1336, 1347 (Fed. Cir. 2014) (quotation marks omitted) ("There is a heavy presumption that claim terms carry their accustomed meaning in the relevant community at the relevant time.") *cert. granted, judgment vacated,* 135 S. Ct. 1846 (2015).

"The claim construction inquiry . . . begins and ends in all cases with the actual words of the claim." *Renishaw PLC v. Marposs Societa' per Azioni*, 158 F.3d 1243, 1248 (Fed. Cir. 1998). "[I]n all aspects of claim construction, 'the name of the game is the claim.'" *Apple Inc. v. Motorola, Inc.*, 757 F.3d 1286, 1298 (Fed. Cir. 2014) (quoting *In re Hiniker Co.*, 150 F.3d 1362, 1369 (Fed. Cir. 1998)) *overruled on other grounds by Williamson v. Citrix Online, LLC*, 792 F.3d 1339 (Fed. Cir. 2015). First, a term's context in the asserted claim can be instructive. *Phillips*, 415 F.3d at 1314. Other asserted or unasserted claims can also aid in determining the claim's meaning, because claim terms are typically used consistently throughout the patent. *Id.* Differences among the claim terms can also assist in understanding a term's meaning. *Id*. For example, when a dependent claim adds a limitation to an independent claim, it is presumed that the independent claim does not include the limitation. *Id*. at 1314-15.

Exhibit-1010
Unified Patents, LLC v. Ozmo Licensing LLC

"[C]laims 'must be read in view of the specification, of which they are a part.'" *Phillips*, 415 F.3d at 1314-15 (quoting *Markman v. Westview Instruments, Inc.*, 52 F.3d 967, 979 (Fed. Cir. 1995) (en banc)). "[T]he specification 'is always highly relevant to the claim construction analysis. Usually, it is dispositive; it is the single best guide to the meaning of a disputed term.'" *Id*. (quoting *Vitronics Corp. v. Conceptronic, Inc.*, 90 F.3d 1576, 1582 (Fed. Cir. 1996)); *Teleflex, Inc. v. Ficosa N. Am. Corp.*, 299 F.3d 1313, 1325 (Fed. Cir. 2002). This is true because a patentee may define his own terms, give a claim term a different meaning than the term would otherwise possess, or disclaim or disavow the claim scope. *Phillips*, 415 F.3d at 1316. In these situations, the inventor's lexicography governs. *Id*.

The specification may also resolve ambiguous claim terms "where the ordinary and accustomed meaning of the words used in the claims lack sufficient clarity to permit the scope of the claim to be ascertained from the words alone." *Teleflex, Inc.*, 299 F.3d at 1325. But, "'[a]lthough the specification may aid the court in interpreting the meaning of disputed claim language, particular embodiments and examples appearing in the specification will not generally be read into the claims.'" *Comark Commc'ns, Inc. v. Harris Corp.*, 156 F.3d 1182, 1187 (Fed. Cir. 1998) (quoting *Constant v. Advanced Micro-Devices, Inc.*, 848 F.2d 1560, 1571 (Fed. Cir. 1988)); *see also Phillips*, 415 F.3d at 1323. "[I]t is improper to read limitations from a preferred embodiment described in the specification—even if it is the only embodiment—into the claims absent a clear indication in the intrinsic record that the patentee intended the claims to be so limited." *Liebel-Flarsheim Co. v. Medrad, Inc.*, 358 F.3d 898, 913 (Fed. Cir. 2004).

The prosecution history is another tool to supply the proper context for claim construction because, like the specification, the prosecution history provides evidence of how the U.S. Patent and Trademark Office ("PTO") and the inventor understood the patent. *Phillips*, 415

F.3d at 1317. However, "because the prosecution history represents an ongoing negotiation between the PTO and the applicant, rather than the final product of that negotiation, it often lacks the clarity of the specification and thus is less useful for claim construction purposes." *Id.* at 1318; *see also Athletic Alts., Inc. v. Prince Mfg.*, 73 F.3d 1573, 1580 (Fed. Cir. 1996) (ambiguous prosecution history may be "unhelpful as an interpretive resource").

Although extrinsic evidence can also be useful, it is "'less significant than the intrinsic record in determining the legally operative meaning of claim language.'" *Phillips*, 415 F.3d at 1317 (quoting *C.R. Bard, Inc.*, 388 F.3d at 862). Technical dictionaries and treatises may help a court understand the underlying technology and the manner in which one skilled in the art might use claim terms, but technical dictionaries and treatises may provide definitions that are too broad or may not be indicative of how the term is used in the patent. *Id*. at 1318. Similarly, expert testimony may aid a court in understanding the underlying technology and determining the particular meaning of a term in the pertinent field, but an expert's conclusory, unsupported assertions as to a term's definition are not helpful to a court. *Id*. Extrinsic evidence is "less reliable than the patent and its prosecution history in determining how to read claim terms." *Id*. The Supreme Court has explained the role of extrinsic evidence in claim construction:

> In some cases, however, the district court will need to look beyond the patent's intrinsic evidence and to consult extrinsic evidence in order to understand, for example, the background science or the meaning of a term in the relevant art during the relevant time period. *See, e.g., Seymour v. Osborne*, 11 Wall. 516, 546 (1871) (a patent may be "so interspersed with technical terms and terms of art that the testimony of scientific witnesses is indispensable to a correct understanding of its meaning"). In cases where those subsidiary facts are in dispute, courts will need to make subsidiary factual findings about that extrinsic evidence. These are the "evidentiary underpinnings" of claim construction that we discussed in *Markman*, and this subsidiary factfinding must be reviewed for clear error on appeal.

Teva Pharm. USA, Inc. v. Sandoz, Inc., 574 U.S. 318, 331-32 (2015).

Exhibit-1010
Unified Patents, LLC v. Ozmo Licensing LLC

B. Departing from the Ordinary Meaning of a Claim Term

There are "only two exceptions to [the] general rule" that claim terms are construed according to their plain and ordinary meaning: "1) when a patentee sets out a definition and acts as his own lexicographer, or 2) when the patentee disavows the full scope of the claim term either in the specification or during prosecution."[3] *Golden Bridge Tech., Inc. v. Apple Inc.*, 758 F.3d 1362, 1365 (Fed. Cir. 2014) (quoting *Thorner v. Sony Comput. Entm't Am. LLC*, 669 F.3d 1362, 1365 (Fed. Cir. 2012)); *see also GE Lighting Sols., LLC v. AgiLight, Inc.*, 750 F.3d 1304, 1309 (Fed. Cir. 2014) ("[T]he specification and prosecution history only compel departure from the plain meaning in two instances: lexicography and disavowal."). The standards for finding lexicography or disavowal are "exacting." *GE Lighting Sols.*, 750 F.3d at 1309.

To act as his own lexicographer, the patentee must "clearly set forth a definition of the disputed claim term," and "clearly express an intent to define the term." *Id.* (quoting *Thorner*, 669 F.3d at 1365); *see also Renishaw*, 158 F.3d at 1249. The patentee's lexicography must appear "with reasonable clarity, deliberateness, and precision." *Renishaw*, 158 F.3d at 1249.

To disavow or disclaim the full scope of a claim term, the patentee's statements in the specification or prosecution history must amount to a "clear and unmistakable" surrender. *Cordis Corp. v. Bos. Sci. Corp.*, 561 F.3d 1319, 1329 (Fed. Cir. 2009); *see also Thorner*, 669 F.3d at 1366 ("The patentee may demonstrate intent to deviate from the ordinary and accustomed meaning of a claim term by including in the specification expressions of manifest exclusion or restriction, representing a clear disavowal of claim scope."). "Where an applicant's statements are amenable to multiple reasonable interpretations, they cannot be deemed clear and

[3] Some cases have characterized other principles of claim construction as "exceptions" to the general rule, such as the statutory requirement that a means-plus-function term is construed to cover the corresponding structure disclosed in the specification. *See, e.g., CCS Fitness, Inc. v. Brunswick Corp.*, 288 F.3d 1359, 1367 (Fed. Cir. 2002).

Exhibit-1010
Unified Patents, LLC v. Ozmo Licensing LLC

unmistakable." *3M Innovative Props. Co. v. Tredegar Corp.*, 725 F.3d 1315, 1326 (Fed. Cir. 2013).

III. CONSTRUCTION OF DISPUTED TERMS

The parties dispute the meaning and scope of ten claim terms in the patents-in-suit.

A. The "logic for" terms

The "logic for" terms include three disputed phrases. *See* Dkt. No. 33 at 1-3 (identifying for construction "logic for processing . . .," "logic for generating . . .," and "logic for initiating and maintaining . . ."). Because the threshold dispute between the parties is the same—whether the terms are subject to means-plus-function interpretation in accordance with 35 U.S.C. § 112, ¶ 6[4] —for this issue, the Court addresses the "logic for" terms together.

A patent claim may be expressed using functional language. *See* 35 U.S.C. § 112, ¶ 6; *Williamson v. Citrix Online, LLC*, 792 F.3d 1339, 1347-49 & n.3 (Fed. Cir. 2015) (en banc in relevant portion). Means-plus-function claiming occurs when a claim term invokes 35 U.S.C. § 112, ¶ 6, which provides:

> An element in a claim for a combination may be expressed as a means or step for performing a specified function without the recital of structure, material, or acts in support thereof, and such claim shall be construed to cover the corresponding structure, material, or acts described in the specification and equivalents thereof.

But § 112, ¶ 6 does not apply to all functional claim language. There is a rebuttal presumption that § 112, ¶ 6 applies when the claim language recites "means" or "step for" terms and that it does not apply in the absence of those terms. *Williamson*, 792 F.3d at 1348. "When a claim term lacks the word 'means,' the presumption can be overcome and § 112, para. 6 will apply if

[4] The Court notes that paragraph 6 of 35 U.S.C. § 112 was replaced with 35 U.S.C. § 112(f) when the Leahy-Smith America Invents Act (AIA) took effect on September 6, 2012. Because the application that the resulted in the '814 Patent was filed before that date, the Court refers to the pre-AIA version of § 112.

Exhibit-1010
Unified Patents, LLC v. Ozmo Licensing LLC

the challenger demonstrates that the claim term fails to recite sufficiently definite structure or else recites function without reciting sufficient structure for performing that function." *Id*. (citations and internal quotation marks omitted). To rebut the presumption, "[a] challenger need only show that the structure is not 'sufficient.'" *Egenera, Inc. v. Cisco Sys., Inc.*, 972 F.3d 1367, 1373 (Fed. Cir. 2020) (citing *TEK Glob., S.R.L. v. Sealant Sys. Int'l, Inc.*, 920 F.3d 777, 785 (Fed. Cir. 2019)). "The correct inquiry, when 'means' is absent from a limitation, is whether the limitation, read in light of the remaining claim language, specification, prosecution history, and relevant extrinsic evidence, has sufficiently definite structure to a person of ordinary skill in the art." *Apple Inc. v. Motorola, Inc.*, 757 F.3d 1286, 1298 (Fed. Cir. 2014); *see also Inventio AG v. ThyssenKrupp Elevator Americas Corp.*, 649 F.3d 1350, (Fed. Cir. 2011) ("It is proper to consult the intrinsic record, including the written description, when determining if a challenger has rebutted the presumption that a claim lacking the term 'means' recites sufficiently definite structure.").

Therefore, the Court's analysis proceeds in two steps. First, the Court must determine whether the "logic for" terms are in means-plus-function form pursuant to 35 U.S.C. § 112, ¶ 6. *See Robert Bosch, LLC v. Snap-On Inc.*, 769 F.3d 1094, 1097 (Fed. Cir. 2014). If the Court determines that the "logic for" terms invoke § 112, ¶ 6, then the Court proceeds to the next step and attempts "to construe the disputed claim term by identifying the corresponding structure, material, or acts described in the specification to which the term will be limited." *Id*. (internal quotation marks and citations omitted).

Both parties recognize that the "logic for" terms do no use the word "means," thus giving rise to a rebuttable presumption that the "logic for" terms do no invoke means-plus-function interpretation. *See* Dkt. No. 26 at 9; Dkt. No. 29 at 6. Both parties also address the fact that in

Exhibit-1010
Unified Patents, LLC v. Ozmo Licensing LLC

Sonrai Memory Ltd. v. Oracle Corp., the Court did not apply § 112, ¶ 6 interpretation to claim terms that used "logic for" language. No. 1:22-CV-94-LY, 2022 WL 800730 at *9 (W.D. Tex. Mar. 16, 2022) (finding that "the context in which the term 'logic' is used in the claims and the specification of the '691 Patent provides sufficient structural meaning to a POSITA"). This case is different from *Sonrai*.

Plaintiff argues that the "logic for" terms are not subject to means-plus-function interpretation because 1) "means for" is not present; (2) "logic" as used in the claims is not a nonce word; and (3) the claim language provides sufficient structure to avoid the application of § 112, ¶ 6. Dkt. No. 29 at 9. Defendants argue that in this case, the totality of the evidence, in particular the lack of structure in the claim, the prosecution history, and the fact that the '991 Patent claims are identical to the '814 Patent claims except for the "logic for" language is sufficient evidence to rebut the presumption against invoking § 112, ¶ 6 interpretation. Dkt. No. 31 at 4-5. The Court agrees with Defendants.

Although claim 1 of the '814 Patent does not recite the word "means," the "logic for" terms follow conventional means-plus-function format. That is, the phrase "logic for" precedes a function that the "logic" is required to perform. *See e.g.*, '814 Patent at 14:52-53 ("logic for processing data received via the wireless radio circuit"). Indeed, the "logic for" terms recite general functional language. *Id*. Unlike in *Sonrai*, the "logic for" terms here do not describe the claim limitation's operation, such as its input, output, or connections, in a manner that provides sufficiently definite structure to a POSITA to avoid § 112, ¶ 6. *Sonrai*, 2022 WL 800730 at *9 (finding that "the context in which the term 'logic' is used in the claim and the specification of the '691 patent provides sufficient structural meaning to a POSITA"); *see also Apple Inc. v. Motorola, Inc.*, 757 F.3d 1286, 1299 (Fed. Cir. 2014) (explaining that "[s]tructure may also be

Exhibit-1010
Unified Patents, LLC v. Ozmo Licensing LLC

provided by describing the claim limitation's operation, such as its input, output, or connections").

The prosecution history of the '814 and '991 Patents is also informative. *Dyfan, LLC v. Target Corp.*, 28 F.4th 1360, 1365-66 (Fed. Cir. 2022) ("Intrinsic evidence, such as the claims themselves and the prosecution history, can be informative in determining whether the disputed claim language recites sufficiently definite structure or was intended to invoke § 112, ¶ 6."). During prosecution of the '814 Patent, the Examiner specifically identified the "logic for" terms as invoking § 112, ¶ 6 interpretation:

> **In claim 1,** claim limitations **"interface providing", "logic for processing", "logic for generating", "logic for initiating and maintaining"** have been interpreted under 35 U.S.C. 112(f) or U.S.C. 112 (pre-AIA), sixth paragraph, because it uses a non-structural terms "interface" and "logic" coupled with functional language "providing, processing, generating, initiating and maintaining" without reciting sufficient structure to achieve the function. Furthermore, the non-structural term is not preceded by a structural modifier.

See Dkt. No. 26-6 at 96 ('814 Patent prosecution history). The Examiner invited the patentee to disagree with his conclusions by argument showing that the claim recites sufficient structure or to provide amendment to avoid § 112, ¶ 6:

> If applicant does **not** wish to have the claim limitation treated under 35 U.S.C. 112(f) or 35 U.S.C. 112 (pre-AIA), sixth paragraph, applicant may amend the claim . . . or present a sufficient showing that the claim recites sufficient structure, material, or acts . . . .

See Dkt. No. 26-6 at 98. The patentee did not do so. In a subsequent Amendment to the application that became the '814 Patent, the patentee did not argue against application of § 112, ¶ 6, nor did the patentee make any amendment to the claim language. *See* Dkt. No. 26-6 at 146-157. In contrast, during prosecution of the related '991 Patent, the application originally included the same "logic for" language, and the Examiner again treated these terms as means-

plus-function limitations. *See* Dkt. No. 26-7 at 90 ('991 Patent prosecution history). Unlike the '814 Patent, the patentee amended the claims to remove the "logic for" language from claim 1 of the '991 Patent. *Id*. at 112.

The Court recognizes that it is not bound by the Examiner's statements and/or the patentee's actions or inaction during prosecution. *Skky, Inc. v. MindGeek s.a.r.l.*, 859 F.3d 1014, 1020 (Fed. Cir. 2017) (explaining that "we are not bound by the Examiner's or the parties' understanding of the law or the claims"). Even so, the Court finds that in this case the intrinsic evidence persuasively demonstrates that the "logic for" terms are subject to means-plus-function interpretation and that Defendants have established by a preponderance of the evidence that the presumption against means-plus-function interpretation is rebutted.

1. Term No. 1: "logic for processing data received via the wireless radio circuit"

Plaintiff's Proposal	Defendants' Proposal
Ordinary meaning (not means-plus-function) **Function:** processing data received via the wireless radio circuit **Structure:** Hub (in all claims). Also, processing unit 28 coupled to or integrated with wireless circuit *27*, software platform 36, and operating system 37 and their equivalents	Means-plus-function limitation **Function:** processing data received from the wireless circuit **Structure:** Processing Unit 28 (Fig. 6) along with associated software platform 36

The "logic for processing . . ." term appears in claim 1 of the '814 Patent and all asserted claims depending therefrom. As explained above, the term invokes § 112, ¶ 6 construction.

The parties appear to dispute whether the identified function for this means-plus-function term should match the language recited in claim 1 of the '814 Patent. Plaintiff's alternative means-plus-function proposal follows the claim language, whereas Defendants' proposal substitutes the word "from" for the term "via" in the claim language. *Supra*. The Court sees no

meaningful difference in the scope of the parties' proposed functions. Because the use of "via" in the "logic for processing . . ." term is readily understood, the Court adopts the actual claim language contained in Plaintiff's proposed function.[5]

After identifying the claimed function, the Court's § 112, ¶ 6 analysis turns to identifying the corresponding structure in the specification that performs that function. *Omega Eng'g, Inc. v. Raytek Corp.*, 334 F.3d 1314, 1322 (Fed. Cir. 2003). The parties dispute the structure disclosed in the specification that corresponds to the claimed function. Dkt. No. 31 at 6; Dkt. No. 32 at 4. Plaintiff's proposed structure appears to have evolved throughout the claim construction briefing. *Compare* Dkt. No. 26 at 14; Dkt. No. 29 at 11; Dkt. No. 32 at 4. In its response brief, Plaintiff argues that its alternative § 112, ¶ 6 construction should be adopted because the patents-in-suit disclose that "CPU 24 and memory module 25 are coupled to or integrated with the wireless circuit, and are used to implement the portion of the communication protocol that is not implemented in the dedicated control circuit and datapath logic, together with any application-specific software (which may be written using an operating system 37) to form and implement a software platform 36." Dkt. No. 29 at 10. In its sur-reply, Plaintiff adds "Hub (in all claims)" to its proposed structure and argues that the "hub" is sufficient structure to avoid § 112, ¶ 6 interpretation. Dkt. No. 32 at 6-7. Defendants argue that FIG. 6 and the corresponding text in the specification show the corresponding structure for the claimed function. Dkt. No. 26 at 13. Defendants argue that the corresponding structure disclosed in this portion of the specification is processing unit 28 along with associated software platform 36. *Id.* at 13. While the Court agrees with Defendants that the corresponding structure is shown and

[5] The Court notes that both parties use the word "via" in their functional statements for the "logic for generating . . ." term, thus indicating no apparent dispute in scope. Dkt. No. 33 at 2.

Exhibit-1010
Unified Patents, LLC v. Ozmo Licensing LLC

disclosed in the context of FIG. 6 of the '814 Patent, the Court finds that neither parties' proposal correctly identifies the corresponding structure for the claimed function.

FIG. 6 and the accompanying text from the specification disclose the structure for this claim term. *See e.g.*, '814 Patent at 4:40-42 ("FIG. 6 is a simplified high-level block diagram of a wireless hub configured for use as a bridge between a WPAN and a WLAN."). The claimed function requires "processing data received via the wireless radio *circuit*." *Id*. at 14:52-53 (emphasis added). Box 27 shown in FIG. 6 (reproduced below) is described in the specification as the "802.11x-compliant *circuit 27*." '814 Patent at 6:53-58 (emphasis added). According to the claimed function, the processing is done by something that receives the data via the *circuit*, thus the corresponding structure is not wireless circuit 27 and its constituent components.

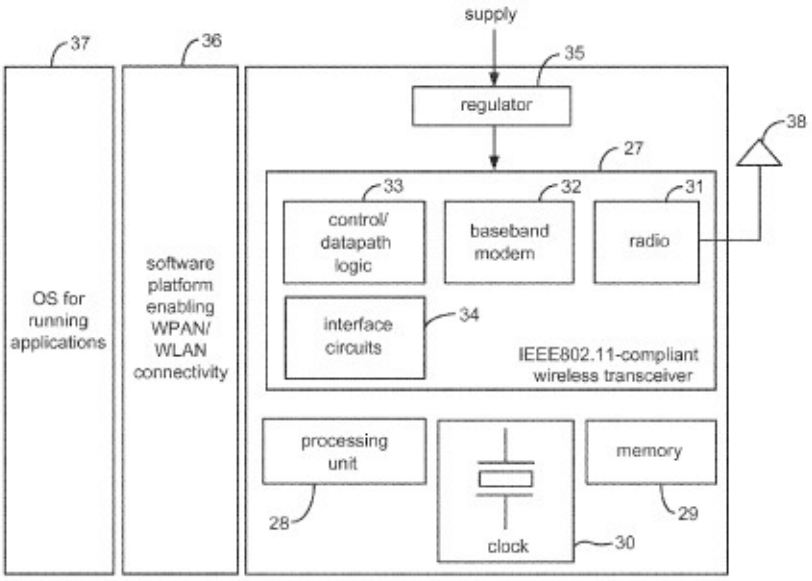

FIG. 6

The common specification of the patents-in-suit describes that "[i]nterface circuitry **34** provides an interface to the processing unit **28** and memory module **29**." '814 Patent at 6:61-63. The specification further discloses that "processing unit **28** and memory module **29** are used to implement that portion of the communication protocol that is not implemented in the dedicated

control and datapath logic . . . ." *Id.* at 7:17-19. In other words, processing unit 28 is the corresponding structure that processes data received via wireless circuit 27. Additionally, the Court notes that claim 1 of the '991 Patent recites identical functional language as the "logic for" terms, but precedes and associates such functional statements with the term "processor," thus providing further indication that the corresponding structure is processing unit **28** disclosed in the specification. *See e.g.*, '991 Patent at 14:46-47 (claim 1 reciting "a processor configured to: process data received via the wireless radio circuit").

For the reasons set forth above, the Court concludes that the claimed function of this means-plus-function term is **"processing data received via the wireless radio circuit"** and that the corresponding structure is **"processing unit 28."**

2. Term No. 2: "logic for generating data to be transmitted by the wireless radio circuit"

Plaintiff's Proposal	Defendants' Proposal
Ordinary meaning (not means-plus-function) **Function:** generating data to be transmitted via the wireless radio circuit **Structure:** Hub (in all claims). Also, processing unit 28 coupled to or integrated with wireless circuit *27*, software platform 36, and operating system 37, and their equivalents	Means-plus-function limitation **Function:** generating data to be transmitted via the wireless radio circuit **Structure:** Processing Unit 28 (Fig. 6) along with associated software platform 36

The "logic for generating . . ." term appears in claim 1 of the '814 Patent and all asserted claims depending therefrom. As explained above, the term invokes § 112, ¶ 6 construction. Under Plaintiff's alternative means-plus-function proposal, the parties agree on the claimed function. The dispute concerns what structure disclosed in the common specification corresponds to the claimed function. For the same reasons discussed for the "logic for

processing . . .” term, the corresponding structure for “logic for generating . . .” is processing unit **28**.

For the reasons set forth above, the Court concludes that the claimed function of this means-plus function term is **“generating data to be transmitted via the wireless radio circuit”** and that the corresponding structure is **“processing unit 28.”**

3. **Term No. 3: “logic for initiating and maintaining wireless network connections with nodes of a wireless network external to the network-enabled hub, maintaining at least a first wireless network connection using a first wireless network protocol and a second wireless network connection using a second wireless network protocol, that can be maintained, at times, simultaneously with each other in a common wireless space”**

Plaintiff’s Proposal	Defendants’ Proposal
Ordinary meaning (not means-plus-function) **Function:** initiating and, at times, simultaneously maintaining two wireless network connections in a common wireless space **Structure:** connection with a first network using a first wireless protocol and a connection with a second network using a second wireless protocol that is an overlay protocol of the first wireless protocol where communications using the second wireless protocol are partially consistent with the first protocol **Alternatively:** Processing unit 28 coupled to or integrated with wireless circuit 27, software platform 36, memory module 29, radio 21, baseband modem 22, control and datapath logic 33, and operating system 37, as well as the methods for “Coordination of Multiple PERs” as disclosed FIGs. 11 and 12, and the “Device Discovery” procedures contemplated at 13:16-14:27, and their equivalents	Means-plus-function limitation **Function:** initiating and maintaining wireless network connection **Structure:** Processing Unit 28 (Fig. 6) and wireless circuit 27 along with associated software platform 36

The "logic for initiating and maintaining . . ." term appears in claim 1 of the '814 Patent and all asserted claims depending therefrom. As explained above, the term invokes § 112, ¶ 6 construction. The parties dispute the function and corresponding structure for this means-plus-function term.

Defendants argue that the claimed function is that disclosed in the claim, initiating and maintaining a wireless connection. Dkt. No. 26 at 15. Plaintiff's proposed function appears to have evolved throughout the claim construction briefing. *Compare* Dkt. No. 26 at 15; Dkt. No. 29 at 11-12; Dkt. No. 32 at 7. In its sur-reply brief, Plaintiff takes issue with Defendants' proposed function and argues that the function is not the initiating and maintaining of a single wireless network connection, but it is instead the initiating and maintaining of two wireless network connections and, at times, simultaneously in a common wireless space. Dkt. No. 32 at 8. The Court finds that neither party has correctly identified the claimed function.

When identifying the claimed function of a means-plus-function term, the Court is required to "stay[] true to the claim language and the limitations expressly recited in the claims." *Omega Eng'g*, 334 F.3d at 1322. "It is improper to narrow the scope of the function beyond the claim. It is equally improper to broaden the scope of the claimed function by ignoring clear limitations in the claim language." *Cardiac Pacemakers, Inc. v. St. Jude Med., Inc.*, 296 F.3d 1106, 1113 (Fed. Cir. 2002). The Court agrees with Plaintiff that Defendants' truncated function—"initiating and maintaining wireless network connection"—improperly eliminates functional requirements explicitly recited in the claim. At the same time, however, Plaintiff's proposed function also deviates from the claim language.

The law regarding the first step in the means-plus-function analysis— identification of the claimed function—is "well-established" and ordinarily requires identification of the function

Exhibit-1010
Unified Patents, LLC v. Ozmo Licensing LLC

explicitly recited in the claim. *JVS Enters., Inc. v. Interact Accessories, Inc.*, 424 F.3d 1324, 1331 (Fed. Cir. 2005) ("First, a court may not construe a means-plus-function limitation 'by adopting a function different from that explicitly recited in the claim.'") (quoting *Micro Chem., Inc. v. Great Plains Chem. Co.*, 194 F.3d 1250, 1258 (Fed Cir. 1999)). In identifying the claimed function here, the Court sees not justifiable reason to deviate from the plain language of the claim. The Court therefore concludes that the function for this means-plus-function term is "logic for initiating and maintaining wireless network connections with nodes of a wireless network external to the network-enabled hub, maintaining at least a first wireless network connection using a first wireless network protocol and a second wireless network connection using a second wireless network protocol, that can be maintained, at times, simultaneously with each other in a common wireless space." *See* '814 Patent at 14:56-63 (claim 1).

The parties dispute the structure disclosed in the specification that corresponds to the claimed function. In its sur-reply, Plaintiff argues that the structure for performing the claimed function is recited in the claim itself, thus rendering the "logic for initiating and maintaining . . ." term not subject to means-plus-function interpretation. Dkt. No. 32 at 8. Defendants argue that the corresponding structure for this claim term is disclosed in FIG. 6 and the corresponding description in the specification. Dkt. No. 26 at 15. Defendants argue that Plaintiff's alternative proposal for corresponding structure improperly includes components from the claimed hub and the unclaimed PS-STAs. Dkt. No. 31 at 7. Defendants further assert that Plaintiff's alternative proposal includes additional elements that are not structure, such as references to FIGs. 11 and 12. The Court agrees with Defendants.

FIG. 6 and the accompanying text from the specification disclose the corresponding structure for this means-plus-function claim term. *See e.g.*, '814 Patent at 4:40-42 ("FIG. 6 is a

simplified high-level block diagram of a wireless hub configured for use as a bridge between a WPAN and a WLAN."). The "logic for initiating and maintaining . . ." term imposes certain functional requirements with respect to the network connections. For example, the claimed function requires "maintaining at least a first wireless network connection using a first wireless network protocol and a second wireless network connection using a second wireless network protocol." '814 Patent at 14:58-61. The function further specifies that the connections "can be maintained, at times, simultaneously with each other in a common wireless space." *Id*. at 14:61-63. With respect to these specific functional requirements, the common specification provides:

> The wireless hub further includes a number of software modules forming a software platform 36 that enable circuit 29 to communicate with both the WPAN and WLAN. In one embodiment, the software platform 36 enables circuit 27 to connect to the WPAN, without losing connectivity (such as association and synchronization) to the WLAN, as described in Vleugels I. Circuit 27 can be connected to the WLAN and WPAN in alternating cycles, however added latency would be incurred.

'814 Patent at 7:3-11; *see also* 7:25-27 ("The CPU and memory module are also used for the implementation of the software platform that enables concurrent or alternating WLAN/WPAN connectivity."); Fig. 6. Moreover, wireless circuit 27 provides necessary structure for the network connections specified in the claimed function. '814 Patent at 6:58-61 ("The 802.11x-compliant circuit 27 is shown as including a radio 31 operating, for example, in the unlicensed 2.4-GHz and/or 5-GHz frequency bands, a baseband modem 32, and dedicated control and datapath logic 33."). The Court therefore finds that the corresponding structure is: wireless circuit 27, processing unit 28, and software platform 36.

For the reasons set forth above, the Court concludes that the claimed function of this means-plus-function term is **"initiating and maintaining wireless network connections with nodes of a wireless network external to the network-enabled hub, maintaining at least a**

first wireless network connection using a first wireless network protocol and a second wireless network connection using a second wireless network protocol, that can be maintained, at times, simultaneously with each other in a common wireless space" and that the corresponding structure is **"wireless circuit 27, processing unit 28, and software platform 36."**

B. Term No. 4: "data forwarding logic"

Plaintiff's Proposal	Defendants' Proposal
Ordinary meaning (not means-plus-function) **Function:** forwarding data between an originating node and a destination node, wherein the originating node is a node in one of the first and second wireless networks and the destination node is a node in the other of the first and second wireless networks **Structure:** Software platform 36 (Fig. 6), wireless circuit 27, processing unit 28, memory module 29, radio 21, baseband modem 22, and/or control and datapath logic 33, and their equivalents	Means-plus-function limitation **Function:** forwarding data between an originating node and a destination node, wherein the originating node is a node in one of the first and second wireless networks and the destination node is a node in the other of the first and second wireless networks **Corresponding Structure:** control/datapath logic 33 (Fig. 6) along with associated software platform 36

The term "data forwarding logic" appears in claim 1 of the '814 Patent, claims 1 and 19 of the '991 Patent, and all asserted claims depending therefrom.[6] The parties dispute whether this term is subject to means-plus-function interpretation in accordance with § 112, ¶ 6. Dkt. No. 26 at 26; Dkt. No. 29 at 14.

Unlike the "logic for" terms, the term "data forwarding logic" is not subject to means-plus-function interpretation. Here, the term "logic" includes the modifier "data forwarding" and is not written in traditional means-plus-function format. Moreover, claim 1 of the '814 Patent

[6] Claim 19 of the '991 Patent recites "logic for data forwarding." '991 Patent at 17:1. Neither party addresses this specific formulation of the term. Regardless, the Court finds that this term does not invoke § 112, ¶ 6 interpretation for the reasons discussed.

Exhibit-1010
Unified Patents, LLC v. Ozmo Licensing LLC

and claim 1 of the '991 Patent expressly provide that the "data forwarding logic" is "implemented in the network-enabled hub using hardware and/or software." *See* '814 Patent at 15:4-5 (claim 1); '991 Patent at 14:64-65 (claim 1). At a minimum, the modifier "data forwarding" in combination with express statements in the claims that the "logic" is "implemented . . . using hardware and/or software" is sufficient to connote some structure to a POSITA, thus confirming that the presumption against § 112, ¶ 6 should remain intact. *Dyfan*, 28 F. 4th at 1366 (explaining that "[i]n cases where it is clear that a claim term itself connotes some structure to a person of skill in the art, 'the presumption that § 112, ¶ 6 does not apply is determinative' in the absence of 'more compelling evidence of the understanding of one of ordinary skill in the art.'") (quoting *Apex Inc. v. Raritan Comput., Inc.*, 325 F.3d 1364, 1373 (Fed. Cir. 2003)). Moreover, unlike the "logic for" terms, Defendants have not shown that the term "data forwarding logic" has prosecution history evidence suggesting that the term does not connote sufficiently definite structure to a POSITA.

Although the presumption against § 112, ¶ 6 is no longer "strong," it is still a presumption that Defendants must affirmatively overcome. In the context of the '814 and '991 Patents, the Court finds that Defendants have not shown that the term "data forwarding logic" invokes § 112, ¶ 6. Accordingly, the Court rejects Defendants' argument that "data forwarding logic" is a means-plus-function term governed by § 112, ¶ 6 and finds that no further construction is required.

C. Term No. 5: "first [wireless] network / second [wireless] network"

Plaintiff's Proposal	Defendants' Proposal
Ordinary meaning	Two distinct wireless networks

Exhibit-1010
Unified Patents, LLC v. Ozmo Licensing LLC

The terms "first [wireless] network" and "second [wireless] network" appear in claim 1 of the '814 Patent, claim 1 of the '991 Patent, and all asserted claims depending therefrom. Defendants argue that "[t]he claims and the specification make it clear that the two wireless networks are distinct – that is different." Dkt. No. 26 at 15. Plaintiff argues that a construction that the first and second networks are "distinct" would add confusion in the context of the claims. Dkt. No. 32 at 9. Plaintiff argues that the claims are readily understandable as describing two networks, each with its own protocol. *Id*. The Court agrees with Plaintiff.

It is not entirely clear what Defendants intend with their proposed construction. For example, "two distinct wireless networks" could potentially require geographical distinction, logical distinction, protocol distinction, etc. Regardless, the claims impose no requirement that the first wireless network and the second wireless network are "distinct." *See e.g.*, '814 Patent at cl. 1. Rather, the claims specify the required features of the first and second wireless networks, such as wireless network connections and protocols. *Id*. The Court, therefore, finds that the terms "first [wireless] network" and "second [wireless] network" are used in ordinary parlance and are readily understood in the context of the claims without further clarification. The terms are therefore construed in accordance with their plain and ordinary meaning.

For the reasons set forth above, the Court concludes that the terms "**first [wireless] network"** and **"second [wireless] network"** are given their **plain and ordinary meaning**.

D. Term No. 6: "overlay protocol"

Plaintiff's Proposal	Defendants' Proposal
A protocol governing a second network, which protocol has aspects in common with a first network protocol to reduce interference such that the second and first networks can co-exist	A protocol running on a network with at least some distinct components from the underlying network and that works together with the underlying network to provide added features

Exhibit-1010
Unified Patents, LLC v. Ozmo Licensing LLC

The term "overlay protocol" appears in claim 1 of the '814 Patent, claims 1 and 19 of the '991 Patent, claims 1 and 4 of the '906 Patent, claims 1, 4, and 7 of the '934 Patent, claims 1, 4, and 7 of the '504 Patent, and all asserted claims depending therefrom. In support of their proposed constructions, Plaintiff and Defendants cite to U.S. Patent No. 9,036,613 ("Vleugels I"), which is incorporated by reference into the common specification of the patents-in-suit. *See e.g.*, Dkt. No. 26 at 17; Dkt. No. 29 at 16-17. Defendants argue that Plaintiff's proposed construction introduces additional ambiguity by requiring "reduced interference" without specifying the nature of the interference or how the interference reduction should be achieved. Dkt. No. 31 at 9. Defendants further argue that Vleugels I does not support Plaintiff's proposed construction or provide certainty to it. Dkt. No. 31 at 10. Plaintiff asserts that Defendants proposed construction says nothing about the protocol itself and describes instead a network on which that protocol might run. Dkt. No. 29 at 18. Plaintiff argues that "overlay protocol" is defined in Vleugels I and that Plaintiff's citations to the intrinsic record, including Vleugels I, support its proposed construction. Dkt. No. 32 at 10 and 12. The Court agrees with Plaintiff.

The contextual use of the term "overlay protocol" in the claims provides some clarity as to its scope and meaning. For example, claim 1 recites that "the second wireless network protocol is an overlay protocol with respect to the first wireless protocol in that communications using the second wireless network protocol are partially consistent with the first wireless network protocol." *See* '814 Patent at 14:63–15:1. This usage indicates that an overlay protocol is one that shares some commonality with another protocol. Similar usage of the term "overlay protocol" is found in the other four patents-in-suit. *See e.g.*, '991 Patent at 14:55-59 (claim 1); '906 Patent at 15:31-32 (claim 1); '934 Patent at 15:32-33 (claim 1); '504 Patent at 15:43-44.

Exhibit-1010
Unified Patents, LLC v. Ozmo Licensing LLC

Plaintiff argues that Defendants' proposed construction does not address reduced interference and protocol co-existence discussed in the common specification. The Court agrees. With respect to reduced interference, the '814 Patent provides:

> *To reduce interference*, the computing device coordinates the usage of the wireless medium with devices of a WLAN that may be active in the same space. *Coordination is achieved by the use of a secondary network (WPAN) protocol that is an overlay protocol that is partially compatible with the WLAN protocol, but not entirely*, in terms of power, frame contents and sequences, timing, etc. The secondary network (WPAN) protocols might be 802.11x frames with new frame arrangements adapted for WPAN needs, such as reduced latency, power etc. The computing device might determine to signal the primary network (WLAN) such that devices therein defer so that communications can occur with the secondary network.

'814 Patent at 9:65–10:10 (emphasis added).

Plaintiff asserts that the term "overlay protocol" is discussed extensively in the intrinsic record, and, more specifically by Vleugels I, which is incorporated by reference in the common specification of the patents-in-suit. Dkt. No. 32 at 10. Plaintiff argues that its proposed construction is supported by its citations to the intrinsic record. *See* Dkt. No. 29 at 16-17. The Court agrees.

"Overlay protocol" is defined in Vleugels I:

> As used herein, an *overlay protocol* is an SWN protocol that has elements that are reuses of elements of a PWN protocol to provide one or more advantages.

Vleugels I at 9:39-41 (emphasis added).[7] Vleugels further describes an "overlay protocol" in the context of 802.11x network as follows:

> [T]here are many benefits of using an SWN protocol *such as an 802.11x overlay* instead of an all 802.11x protocol and *by suitable*

[7] The acronyms PWN and SWN are shorthand for "primary wireless network" and "secondary wireless network." *Id* at 5:66–6:3.

> *design of the SWN protocol, the SWNs and the PWN can co-exist . . .*
>
> In the example of FIG. 3(d), it may be expected that mouse 320, keyboard 322, mobile phone 340 and headset 306 are not programmed for, and/or do not have circuits to support, use with an 802.11x primary network, but nonetheless they might use *an SWN protocol that has many aspects in common with an 802.11x protocol*, modified to accommodate the different needs of SWN devices *while providing a measure of co-existence.*

Vleugels I at 10:15-29 (emphasis added); *see also* Abstract (describing WPAN devices "using a protocol that is an overlay protocol only partially compliant with the protocol used over the WLAN but that enables co-existence"); 4:51-55 ("In a specific example, the primary network is an 802.11x network and the secondary network is a network that uses the overlay protocol for communications with devices that cannot directly support an 802.11x network because of latency, power, computing effort, or other limitations, but where the secondary network and primary network need to co-exist."); 5:4-8 ("Communication with the wireless PAN device might use an SWN protocol that is only partially compliant with the protocol used over a conventional WLAN and might do so without interference from the conventional WLAN, yet usage of the WLAN is such that the wireless PAN device and computing device can communicate without interference."). The Court finds that Plaintiff's proposed construction is supported by the intrinsic evidence and should be adopted.

For the reasons set forth above, the Court concludes that the term **"overlay protocol"** is construed to mean **"a protocol governing a second network, which protocol has aspects in common with a first network protocol to reduce interference such that the second and first networks can co-exist."**

Exhibit-1010
Unified Patents, LLC v. Ozmo Licensing LLC

E. Term No. 7: "partially consistent / partially compliant"

Plaintiff's Proposal	Defendants' Proposal
Ordinary meaning (The second, overlay protocol conforms to a part, but not to the entirety, of the first wireless network protocol)	Indefinite

The term "partially consistent" appears in claim 1 of the '814 Patent, claims 1 and 19 of the '991 Patent, and all asserted claims depending therefrom. The term "partially compliant" appears in claims 1 and 4 of the '906 Patent, claims 1, 4, and 7 of the '934 Patent, and claims 1, 4, and 7 of the '504 patent and all asserted claims depending therefrom. The parties agree that the terms are used interchangeably. *See* Dkt. No. 26-10 at ¶ 20; Dkt. No. 29 at 18. The parties dispute whether the claim phrases are indefinite under 35 U.S.C. § 112, ¶ 2.

The "determination of claim indefiniteness is a legal conclusion that is drawn from the Court's performance of its duty as the construer of patent claims." *Exxon Research & Eng'g Co. v. United States*, 265 F.3d 1371, 1375 (Fed. Cir. 2001). Section 112 entails a "delicate balance" between precision and uncertainty:

> On the one hand, the definiteness requirement must take into account the inherent limitations of language. Some modicum of uncertainty, the Court has recognized, is the price of ensuring the appropriate incentives for innovation. . . . At the same time, a patent must be precise enough to afford clear notice of what is claimed, thereby apprising the public of what is still open to them. Otherwise there would be a zone of uncertainty which enterprise and experimentation may enter only at the risk of infringement claims. And absent a meaningful definiteness check, we are told, patent applicants face powerful incentives to inject ambiguity into their claims . . . Eliminating that temptation is in order, and the patent drafter is in the best position to resolve the ambiguity in . . . patent claims.

Nautilus Inc. v. Biosig Instruments, Inc., 572 U.S. 898, 909-10 (2014) (citations omitted). Therefore, in order for a patent to be definite under § 112, ¶ 2, "a patent's claims, viewed in light of the specification and prosecution history, [are required to] inform those skilled in the art about the scope of the invention with reasonable certainty." *Id*. at 910. "The definiteness requirement . . . mandates clarity, while recognizing that absolute precision is unattainable." *Id*. The patents-in-suit are presumed valid. 35 U.S.C. § 282. The burden is on Defendants to show by clear and convincing evidence that the terms "partially consistent" and "partially compliant" fail to comply with the § 112 definiteness requirement. *Nautilus*, 572 U.S. at 912 n. 10.

Defendants assert that "partially consistent" and "partially compliant" are terms of degree. Dkt. No. 26 at 19. Defendants argue that the terms are indefinite because the claims, specification, and file history do not provide objective boundaries to those of skill in the art. *Id*. Defendants contend that the claims can be broken down into three groups: 1) claims that do not recite a specific first wireless network against which the second wireless network must be compared for partial consistency; 2) claims that provide that the first wireless network is an 802.11x network, where x includes various Wi-Fi releases; and 3) claims that provide that the first wireless network is an 802.11x network, and which include additional requirements for the use of modified WLAN frames. Dkt. No. 26 at 20. In each case, Defendants assert that the common specification does not define what it means for the second network to be "partially consistent" or "partially compliant" with the first network. Dkt. No. 31 at 11.

Plaintiff argues that both terms would be understandable to a lay juror and should be given their plain and ordinary meaning, which Plaintiff contends is "conforms to part, but not the entirety of." Dkt. No. 29 at 18; Dkt. No. 32 at 12. Plaintiff disputes that "partially consistent" and "partially compliant" are terms of degree, arguing instead that "partially" is a binary term

like "pregnant" or "bankrupt." Dkt. No. 32 at 13. That is, if the second protocol conforms to the entirety of the first protocol, it is wholly consistent/compliant, not "partially consistent/compliant." *Id*. If instead, it conforms to anything less than all of the first protocol, it is "partially consistent/compliant." *Id*. Even assuming arguendo that "partially" is a term of degree, Plaintiff argues that the intrinsic record here provides sufficient objective boundaries such that the terms remain definite. *Id*. The Court agrees.

As an initial matter, the Court notes that the terms "partially consistent" and "partially compliant" are used in the claims to modify the "overlay protocol." For example, claim 1 of the '814 Patent provides in pertinent part:

> wherein *the second wireless network protocol is an overlay protocol* with respect to the first wireless network protocol in that communications using the second wireless network protocol are *partially consistent with the first wireless network protocol*

See '814 Patent at 14:63-67 (emphasis added). As another example, claim 1 of the '906 Patent provides in pertinent part:

> wherein *the WPAN protocol is an overlay protocol* that is *partially compliant with* respect to *the WLAN protocol*

See '906 Patent at 15:31-32 (emphasis added). Plaintiff asserts that the more appropriate question for claim construction is whether the terms "partially consistent" and "partially compliant"—as used in the context of the larger claim phrases—are indefinite. Dkt. No. 29 at 19. The Court agrees.

Defendants argue that the claims and the specification provide no guidance as to the nature of modifications permitted such that the "partially consistent" or "partially compliant" terms are satisfied. Dkt. No. 26 at 18-19; *see also* Dkt. No. 26-10 at ¶¶ 29, 30. For example, Defendants rhetorically ask: Is a change in one field enough? What about a change to all fields but one? Dkt. No. 26 at 25. Plaintiff responds that in the context of the overall claim limitation

Exhibit-1010
Unified Patents, LLC v. Ozmo Licensing LLC

"a protocol is an 'overlay protocol partially consistent with a first protocol' if it does not conform to the entirety of the first protocol but conforms to the extent required to prevent devices compliant with the second protocol from interfering with devices compliant with the first protocol (i.e., such that these devices can co-exist)." Dkt. No. 29 at 23. The Court agrees with Plaintiff.

The Court finds that Plaintiff's position is supported by the common specification, which provides:

> Communication with the WPAN device might use an SWN protocol that is only partially compliant with the protocol used over a conventional WLAN and might do so without interference from the conventional WLAN, yet usage of the WLAN is such that the WPAN device and computing device can communicate without interference. *To reduce interference*, the computing device coordinates the usage of the wireless medium with devices of a WLAN that may be active in the same space. *Coordination is achieved by the use of a secondary network (WPAN) protocol that is an overlay protocol that is partially compatible with the WLAN protocol*, but not entirely . . . .

'814 Patent at 9:60-61 (emphasis added); *see also* Vleugels I at 10:15-18 (describing that one benefit of an overlay protocol is that the secondary wireless protocol and the primary wireless protocol can co-exist), 10:22-32 (describing that the secondary wireless protocol [the overlay protocol]—modified to accommodate the needs of secondary wireless network devices—has many aspects in common with the primary wireless protocol, while providing a measure of co-existence); Abstract (describing personal area network (PAN) devices using an overlay protocol only partially compliant with the protocol used over the wireless local area network (WLAN) but that enables co-existence). The common specification also provides sufficient guidance as to the modifications a person of ordinary skill in the art might make to implement an overlay protocol that is "partially consistent/compliant" with an underlay protocol:

Exhibit-1010
Unified Patents, LLC v. Ozmo Licensing LLC

> [A]n overlay protocol that is partially compatible with the WLAN protocol, but not entirely, in terms of power, frame contents and sequences, timing, etc. The secondary network (WPAN) protocols might be 802.11x frames with new frame arrangements adapted for WPAN needs, such as reduced latency, power etc.

See '814 Patent at 10:2-7; *see also* 12:19-25 (describing in reference to Figs. 10 and 11 a method coordinating how nodes in the secondary network access the wireless medium); 5:37-48 (describing an embodiment in which power sensitive stations (PS-STAs) not fully compliant with the 802.11x specification may require modification to the drivers or firmware of the 802.11x-compliant wireless circuit at the other end of the communication link).

For the reasons set forth above, the Court finds that Defendants have not established by clear and convincing evidence that the "partially consistent" and "partially compliant" claim terms are indefinite. Having found the terms not indefinite, the Court concludes that **"partially consistent"** and **"partially compliant"** are construed to mean **"conforms to a part, but not the entirety of."**

F. Term No. 8: "configured to agree / can agree / mutually agreeable"

Plaintiff's Proposal	Defendants' Proposal
Set up to be able to come to an arrangement or understanding	The first and second wireless devices jointly determine an inactivity time

The terms "configured to agree," "can agree," and "mutually agreeable" appear in claim 5 of the '814 Patent, claims 8, 11, 12, and 20 of the '991 Patent, claims 1 and 4 of the '906 Patent, claims 1 and 4 of the '934 Patent, and claims 1 and 4 of the '504 Patent. The dispute between the parties centers around whether these terms encompass the scenario where one device communicates a parameter, such as network inactivity time, that is then accepted by a receiving device. Dkt. No. 31 at 13 (describing the dispute as "whether the hub can unilaterally dictate inactivity times, or whether the hub and the second wireless device must agree to a

Exhibit-1010
Unified Patents, LLC v. Ozmo Licensing LLC

specific inactivity time"). The Court finds that this scenario is encompassed by the claim terms and ultimately the construction, "jointly determine." In other words, if one device communicates a parameter that is then accepted by a receiving device, then it is the case that the parameter has been jointly determined, i.e., proposed and accepted. Such mutual action between devices is expressly contemplated by the common specification. *See* '814 Patent at 12:36-38 ("The duration field might have been passed during the pairing state, so that the PER and COORD both know and agree on its value."); 11:57-58 ("This can be dealt with using mutually agreeable inactivity periods.").

For the reasons set forth above, the Court concludes that the terms **"configured to agree," "can agree,"** and **"mutually agreeable"** are construed to mean **"jointly determine."**

G. Term No. 9: "personal area network"

Plaintiff's Proposal	Defendants' Proposal
A short-range wireless network usable to connect peripherals to devices in close proximity	A network, different from the local area network (LAN), that has shorter range and lower transmission power

The term "personal area network" appears in claims 3 and 5 of the '814 Patent, claims 11, 19, and 20 of the '991 Patent, claims 1, 4, and 6-12 of the '906 Patent, claims 1, 4, and 7-9 of the '934 Patent, and claims 1, 4, 7-9, 12, and 14 of the '504 Patent. Defendants argue that the difference between the parties' proposed constructions turns on two points: 1) whether the transmission power of the PAN should be lower than the referenced LAN; and 2) whether shorter range and lower transmission power requirements should be in comparison to the WLAN. Dkt. No. 26 at 28. Plaintiff argues that Defendants' proposal includes limitations that are not requirements of a "personal area network" as understood by a POSITA. Dkt. No. 29 at 26. The Court agrees with Plaintiff.

Exhibit-1010
Unified Patents, LLC v. Ozmo Licensing LLC

The Court finds that the above-referenced claims do not impose the shorter range and lower transmission power requirements included with Defendants' proposed construction. *See, e.g.,* '814 Patent at 15:17-23 (claim 3 describing "a personal area network ('PAN') serving PAN devices"). More specifically, Defendants have not persuasively demonstrated that the term "personal area network" should be limited to certain exemplary embodiments described in the common specification. *See Comark Commc'ns, Inc. v. Harris Corp.*, 156 F.3d 1182, 1187 (Fed. Cir. 1998) (explaining that embodiments and examples from the specification are generally not read into the claims). Rather, the claims use the term "personal area network" in a generic, plain and ordinary context. *See, e.g.*, '814 Patent at cl. 3.

The parties agree that a personal area network is a short-range network. Dkt. No. 31 at 14. This is confirmed by the specification, which provides:

> A WPAN is a short-range wireless network, with typical coverage ranges on the order of 30 feet, usable to connect peripherals to devices in close proximity, thereby eliminating cables usually present for such connections.

See '814 Patent at 9:36-39. Plaintiff argues that the ordinary meaning of personal area network is broad enough to encompass devices that are not power sensitive. Dkt. No. 32 at 16. The Court agrees and declines to adopt Defendants' proposed construction that would exclude such networks. The Court further notes that the term at issue is personal area network (PAN), not wireless personal area network (WLAN). The common specification confirms that a personal area network can be either wired or wireless. *See* '814 Patent at 9:55-57 ("Typically, PAN nodes interact wirelessly, but nothing herein would preclude having some wired nodes."). Thus, the Court's construction of personal area network encompasses both wired and wireless network nodes.

Exhibit-1010
Unified Patents, LLC v. Ozmo Licensing LLC

For the reasons set forth above, the Court construes the term **"personal area network"** to mean **"a short-range network usable to connect peripherals to devices in close proximity."**

H. Term No. 10: "at least partially disable the wireless connection"

Plaintiff's Proposal	Defendants' Proposal
Ordinary meaning (To make at least part of the wireless connection inactive.)	Turn off a portion of the wireless circuit to save power

The term "at least partially disable the wireless connection" appears in claims 1 and 4 of the '906 Patent, claims 1 and 4 of the '934 Patent, and claims 1 and 4 of the '504 Patent. Plaintiff argues that the term "at least partially disable the wireless connection" is readily understood by its ordinary meaning. Dkt. N. 29 at 29. Plaintiff argues that Defendants' proposed construction improperly equates "partially disable" with "turn off." *Id.* The Court agrees with Plaintiff.

The common specification describes that a wireless connection may be partially disabled but not turned off, as would be required by Defendants' proposed construction. The common specification describes this feature in terms of coordinated "inactivity."

> To conserve power at the WPAN device and the computing device, they can agree on an *inactivity time and disable at least a part of a coordination function* of the computing device following a start of the inactivity time, *wherein disabling is such that less power per unit time is consumed by the network circuit relative to power consumed when not disabled.*

See '814 Patent at 12:13-18 (emphasis added). Plaintiffs further argue that Defendants' proposed construction improperly reads in a requirement that the partial disablement must be for the purpose of saving power, which unnecessarily narrows the claim. Dkt. No. 29 at 29. The Court

Exhibit-1010
Unified Patents, LLC v. Ozmo Licensing LLC

agrees with Plaintiff that the purpose requirement proposed by Defendants should not be read into the claims.

For the reasons set forth above, the claim phrase **"at least partially disable the wireless connection"** is given its **plain and ordinary meaning**.

IV. CONCLUSION

For the reasons described herein, the Court adopts the below as its final constructions. Furthermore, the parties should ensure that all testimony that relates to the terms addressed in this memorandum is constrained by the Court's reasoning. However, in the presence of the jury the parties should not expressly or implicitly refer to each other's claim construction positions and should not expressly refer to any portion of this memorandum that is not an actual construction adopted by the Court. The references to the claim construction process should be limited to informing the jury of the constructions adopted by the Court.

Claim Term	The Court's Final Constructions
logic for processing data received via the wireless radio circuit '814 Patent, cl. 1 and all asserted dependent claims	Means-plus-function Function: processing data received via the wireless radio circuit Structure: processing unit 28
logic for generating data to be transmitted by the wireless radio circuit '814 Patent, cl. 1 and all asserted dependent claims	Means-plus-function Function: generating data to be transmitted via the wireless radio circuit Structure: processing unit 28
logic for initiating and maintaining wireless network connections with nodes of a wireless network external to the network-enabled hub, maintaining at least a first wireless network connection using a first	Means-plus-function Function: initiating and maintaining wireless network connections with nodes of a wireless network external to the network-enabled hub, maintaining at least a first wireless network connection using a first wireless

Exhibit-1010
Unified Patents, LLC v. Ozmo Licensing LLC

wireless network protocol and a second wireless network connection using a second wireless network protocol, that can be maintained, at times, simultaneously with each other in a common wireless space '814 Patent, cl. 1 and all asserted dependent claims	network protocol and a second wireless network connection using a second wireless network protocol, that can be maintained, at times, simultaneously with each other in a common wireless space <u>Structure</u>: wireless circuit 27, processing unit 28, and software platform 36
data forwarding logic '814 Patent, cl. 1 and all asserted dependent claims '991 Patent, cls. 1, 19 and all asserted dependent claims	Not means-plus-function Plain and ordinary meaning
first [wireless] network / second [wireless] network '814 Patent, cl. 1 and all asserted dependent claims '991 Patent, cl. 1 and all asserted dependent claims	Plain and ordinary meaning
overlay protocol '814 Patent, cl. 1 and all asserted dependent claims '991 Patent, cls. 1, 19 and all asserted dependent claims '906 Patent, cls. 1, 4, and all asserted dependent claims '934 Patent, cls. 1, 4, 7, and all asserted dependent claims '504 Patent, cls. 1, 4, 7 and all asserted dependent claims	A protocol governing a second network, which protocol has aspects in common with a first network protocol to reduce interference such that the second and first networks can co-exist

partially consistent / partially compliant ’814 Patent, cl. 1 and all asserted dependent claims ’991 Patent, cls. 1, 19 and all asserted dependent claims ’906 Patent, cls. 1, 4 and all asserted dependent claims ’934 Patent, cls. 1, 4, 7 and all asserted dependent claims ’504 Patent, cls. 1, 4, 7 and all asserted dependent claims	Conforms to a part, but not the entirety of
configured to agree / can agree / mutually agreeable ’814 Patent, cl. 5 ’991 Patent, cls. 8, 11, 12, 20 ’906 Patent, cls. 1, 4 ’934 Patent, cls. 1, 4 ’504 Patent, cls. 1, 4	Jointly determine
personal area network ’814 Patent, cls. 3, 5 ’991 Patent, cls. 11, 19, 20 ’906 Patent, cls. 1, 4, 6-12 ’934 Patent, cls. 1, 4, 7-9 ’504 Patent, cls. 1, 4, 7-9, 12, 14	A short-range network usable to connect peripherals to devices in close proximity
at least partially disable the wireless	Plain and ordinary meaning

connection ’906 Patent, cls. 1, 4 ’934 Patent, cls. 1, 4 ’504 Patent, cls. 1, 4	

SIGNED this 20th day of September, 2022.

ALAN D ALBRIGHT
UNITED STATES DISTRICT JUDGE