MicroConverter®, Dual-Channel 16-/24-Bit ADCs with Embedded FLASH MCU

ADuC824

FEATURES

High Resolution Sigma-Delta ADCs
- Two Independent ADCs (16- and 24-Bit Resolution)
- Programmable Gain Front End
- 24-Bit No Missing Codes, Primary ADC
- 13-Bit p-p Resolution @ 20 Hz, 20 mV Range
- 18-Bit p-p Resolution @ 20 Hz, 2.56 V Range

Memory
- 8 Kbytes On-Chip Flash/EE Program Memory
- 640 Bytes On-Chip Flash/EE Data Memory
- Flash/EE, 100 Yr Retention, 100 Kcycles Endurance
- 256 Bytes On-Chip Data RAM

8051-Based Core
- 8051-Compatible Instruction Set (12.58 MHz Max)
- 32 kHz External Crystal, On-Chip Programmable PLL
- Three 16-Bit Timer/Counters
- 26 Programmable I/O Lines
- 11 Interrupt Sources, Two Priority Levels

Power
- Specified for 3 V and 5 V Operation
- Normal: 3 mA @ 3 V (Core CLK = 1.5 MHz)
- Power-Down: 20 μA (32 kHz Crystal Running)

On-Chip Peripherals
- On-Chip Temperature Sensor
- 12-Bit Voltage Output DAC
- Dual Excitation Current Sources
- Reference Detect Circuit
- Time Interval Counter (TIC)
- UART Serial I/O
- I²C®-Compatible and SPI® Serial I/O
- Watchdog Timer (WDT), Power Supply Monitor (PSM)

APPLICATIONS

Intelligent Sensors (IEEE1451.2-Compatible)
Weigh Scales
Portable Instrumentation
Pressure Transducers
4–20 mA Transmitters

GENERAL DESCRIPTION

The ADuC824 is a complete smart transducer front-end, integrating two high-resolution sigma delta ADCs, an 8-bit MCU, and program/data Flash/EE Memory on a single chip. This low power device accepts low-level signals directly from a transducer.

FUNCTIONAL BLOCK DIAGRAM

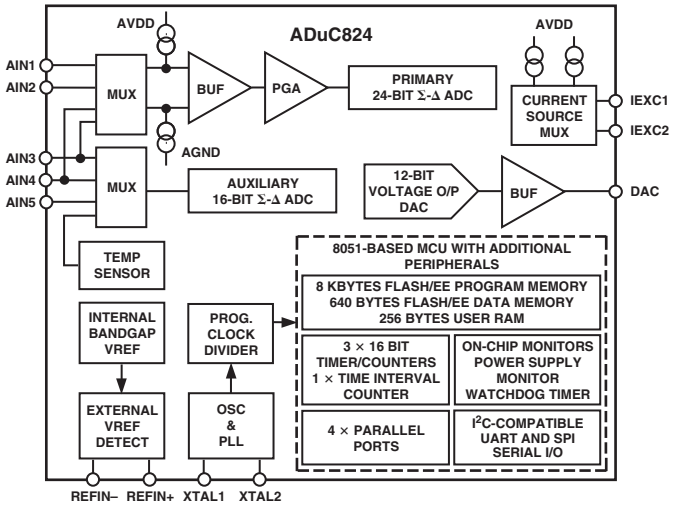

The two independent ADCs (Primary and Auxiliary) include a temperature sensor and a PGA (allowing direct measurement of low-level signals). The ADCs with on-chip digital filtering are intended for the measurement of wide dynamic range, low frequency signals, such as those in weigh scale, strain-gauge, pressure transducer, or temperature measurement applications. The ADC output data rates are programmable and the ADC output resolution will vary with the programmed gain and output rate.

The device operates from a 32 kHz crystal with an on-chip PLL generating a high-frequency clock of 12.58 MHz. This clock is, in turn, routed through a programmable clock divider from which the MCU core clock operating frequency is generated. The microcontroller core is an 8052 and therefore 8051-instruction-set-compatible. The microcontroller core machine cycle consists of 12 core clock periods of the selected core operating frequency. 8 Kbytes of nonvolatile Flash/EE program memory are provided on-chip. 640 bytes of nonvolatile Flash/EE data memory and 256 bytes RAM are also integrated on-chip.

The ADuC824 also incorporates additional analog functionality with a 12-bit DAC, current sources, power supply monitor, and a bandgap reference. On-chip digital peripherals include a watchdog timer, time interval counter, three timers/counters, and three serial I/O ports (SPI, UART, and I²C-compatible).

On-chip factory firmware supports in-circuit serial download and debug modes (via UART), as well as single-pin emulation mode via the $\overline{EA}$ pin. A functional block diagram of the ADuC824 is shown above with a more detailed block diagram shown in Figure 12.

The part operates from a single 3 V or 5 V supply. When operating from 3 V supplies, the power dissipation for the part is below 10 mW. The ADuC824 is housed in a 52-lead MQFP package.

MicroConverter is a registered trademark of Analog Devices, Inc.
SPI is a registered trademark of Motorola, Inc.
I²C is a registered trademark of Philips Semiconductors, Inc.

REV. A

Information furnished by Analog Devices is believed to be accurate and reliable. However, no responsibility is assumed by Analog Devices for its use, nor for any infringements of patents or other rights of third parties which may result from its use. No license is granted by implication or otherwise under any patent or patent rights of Analog Devices.

One Technology Way, P.O. Box 9106, Norwood, MA 02062-9106, U.S.A.
Tel: 781/329-4700 World Wide Web Site: http://www.analog.com
Fax: 781/326-8703
© Analog Devices, Inc., 2001

XILINX 1038

TABLE OF CONTENTS

FEATURES . . . 1
GENERAL DESCRIPTION . . . 1
SPECIFICATIONS . . . 3
TIMING SPECIFICATIONS . . . 8
ABSOLUTE MAXIMUM RATINGS . . . 18
ORDERING GUIDE . . . 18
PIN FUNCTION DESCRIPTIONS . . . 19
ADuC824 BLOCK DIAGRAM . . . 21
MEMORY ORGANIZATION . . . 22
OVERVIEW OF MCU-RELATED SFRS . . . 23
Accumulator (ACC) . . . 23
B SFR (B) . . . 23
Stack Pointer (SP) . . . 23
Data Pointer (DPTR) . . . 23
Program Status Word (PSW) . . . 23
Power Control (PCON) . . . 23
SPECIAL FUNCTION REGISTERS . . . 24
SFR INTERFACE TO THE PRIMARY AND AUXILIARY ADCs . . . 25
ADCSTAT . . . 25
ADCMODE . . . 26
ADC0CON . . . 27
ADC1CON . . . 28
SF . . . 28
ICON . . . 29
ADC0H/ADC0M/ADC0L . . . 29
ADC1H/ADC1L . . . 29
OF0H/OF0M/OF0L . . . 30
OF1H/OF1L . . . 30
GN0H/GN0M/GN0L . . . 30
GN1H/GN1L . . . 30
PRIMARY AND AUXILIARY ADC DESCRIPTION . . . 31
Overview . . . 31
Primary ADC . . . 31
Auxiliary ADC . . . 32
PRIMARY AND AUXILIARY ADC NOISE PERFORMANCE . . . 33
Analog Input Channels . . . 33
Primary and Auxiliary ADC Inputs . . . 33
Analog Input Ranges . . . 33
Programmable Gain Amplifier . . . 34
Bipolar/Unipolar Inputs . . . 34
Burnout Currents . . . 34
Excitation Currents . . . 35
Reference Input . . . 35
Reference Detect . . . 35
Sigma-Delta Modulator . . . 35
Digital Filter . . . 35
ADC Chopping . . . 36
Calibration . . . 37
NONVOLATILE FLASH/EE MEMORY . . . 37
Flash/EE Memory Overview . . . 37
Flash/EE Memory and the ADuC824 . . . 37
ADuC824 Flash/EE Memory Reliability . . . 37
Using the Flash/EE Program Memory . . . 38
Flash/EE Program Memory Security . . . 39
Using the Flash/EE Data Memory . . . 39
USER INTERFACE TO OTHER ON-CHIP ADuC824 PERIPHERALS . . . 41
DAC . . . 41
On-Chip PLL . . . 42
Time Interval Counter (TIC) . . . 43
Watchdog Timer . . . 46
Power Supply Monitor . . . 47
Serial Peripheral Interface . . . 48
I^2C-Compatible Interface . . . 50
8051-COMPATIBLE ON-CHIP PERIPHERALS . . . 51
Parallel I/O Ports 0–3 . . . 51
Timers/Counters . . . 51
TIMER/COUNTER 0 AND 1 OPERATING MODES . . . 54
UART Serial Interface . . . 57
Interrupt System . . . 60
ADuC824 HARDWARE DESIGN CONSIDERATIONS . . . 62
Clock Oscillator . . . 62
External Memory Interface . . . 62
Power-On Reset Operation . . . 63
Power Supplies . . . 63
Power Consumption . . . 64
Power-Saving Modes . . . 64
Grounding and Board Layout Recommendations . . . 64
ADuC824 System Self-Identification . . . 65
OTHER HARDWARE CONSIDERATIONS . . . 65
In-Circuit Serial Download Access . . . 65
Embedded Serial Port Debugger . . . 65
Single-Pin Emulation Mode . . . 65
Enhanced-Hooks Emulation Mode . . . 66
Typical System Configuration . . . 66
QUICKSTART DEVELOPMENT SYSTEM . . . 67
OUTLINE DIMENSIONS . . . 68

SPECIFICATIONS[1] (AV_{DD} = 2.7 V to 3.6 V or 4.75 V to 5.25 V, DV_{DD} = 2.7 V to 3.6 V or 4.75 V to 5.25 V, REFIN(+) = 2.5 V; REFIN(–) = AGND; AGND = DGND = 0 V; XTAL1/XTAL2 = 32.768 kHz Crystal; all specifications T_{MIN} to T_{MAX} unless otherwise noted.)

Parameter	ADuC824BS	Test Conditions/Comments	Unit
ADC SPECIFICATIONS			
Conversion Rate	5.4	On Both Channels	Hz min
	105	Programmable in 0.732 ms Increments	Hz max
Primary ADC			
No Missing Codes[2]	24	20 Hz Update Rate	Bits min
Resolution	13	Range = ±20 mV, 20 Hz Update Rate	Bits p-p typ
	18	Range = ±2.56 V, 20 Hz Update Rate	Bits p-p typ
Output Noise	See Table IX and X in ADC Description	Output Noise Varies with Selected Update Rate and Gain Range	
Integral Nonlinearity	±15		ppm of FSR max
Offset Error[3]	±3		µV typ
Offset Error Drift	±10		nV/°C typ
Full-Scale Error[4]	±10		µV typ
Gain Error Drift[5]	±0.5		ppm/°C typ
ADC Range Matching	±2	AIN = 18 mV	µV typ
Power Supply Rejection (PSR)	95	AIN = 7.8 mV, Range = ±20 mV	dBs min
	80	AIN = 1 V, Range = ±2.56 V	dBs min
Common-Mode DC Rejection			
On AIN	95	At DC, AIN = 7.8 mV, Range = ±20 mV	dBs min
On AIN	90	At DC, AIN = 1 V, Range = ±2.56 V	dBs min
On REFIN	90	At DC, AIN = 1 V, Range = ±2.56 V	dBs min
Common-Mode 50 Hz/60 Hz Rejection[2]		20 Hz Update Rate	
On AIN	95	50 Hz/60 Hz ±1 Hz, AIN = 7.8 mV, Range = ±20 mV	dBs min
	90	50 Hz/60 Hz ±1 Hz, AIN = 1 V, Range = ±2.56 V	dBs min
On REFIN	90	50 Hz/60 Hz ±1 Hz, AIN = 1 V, Range = ±2.56 V	dBs min
Normal Mode 50 Hz/60 Hz Rejection[2]			
On AIN	60	50 Hz/60 Hz ±1 Hz, 20 Hz Update Rate	dBs min
On REFIN	60	50 Hz/60 Hz ±1 Hz, 20 Hz Update Rate	dBs min
Auxiliary ADC			
No Missing Codes[2]	16		Bits min
Resolution	16	Range = ±2.5 V, 20 Hz Update Rate	Bits p-p typ
Output Noise	See Table XI in ADC Description	Output Noise Varies with Selected Update Rate	
Integral Nonlinearity	±15		ppm of FSR max
Offset Error[3]	–2		LSB typ
Offset Error Drift	1		µV/°C typ
Full-Scale Error[6]	–2.5		LSB typ
Gain Error Drift[5]	±0.5		ppm/°C typ
Power Supply Rejection (PSR)	80	AIN = 1 V, 20 Hz Update Rate	dBs min
Normal Mode 50 Hz/60 Hz Rejection[2]			
On AIN	60	50 Hz/60 Hz ±1 Hz	dBs min
On REFIN	60	50 Hz/60 Hz ±1 Hz, 20 Hz Update Rate	dBs min
DAC PERFORMANCE			
DC Specifications[7]			
Resolution	12		Bits
Relative Accuracy	±3		LSB typ
Differential Nonlinearity	–1	Guaranteed 12-Bit Monotonic	LSB max
Offset Error	±50		mV max
Gain Error[8]	±1	AV_{DD} Range	% max
	±1	V_{REF} Range	% typ
AC Specifications[2, 7]			
Voltage Output Settling Time	15	Settling Time to 1 LSB of Final Value	µs typ
Digital-to-Analog Glitch Energy	10	1 LSB Change at Major Carry	nVs typ

ADuC824–SPECIFICATIONS[1]

Parameter	ADuC824BS	Test Conditions/Comments	Unit
INTERNAL REFERENCE			
ADC Reference			
Reference Voltage	1.25 ± 1%	Initial Tolerance @ 25°C, V_{DD} = 5 V	V min/max
Power Supply Rejection	45		dBs typ
Reference Tempco	100		ppm/°C typ
DAC Reference			
Reference Voltage	2.5 ± 1%	Initial Tolerance @ 25°C, V_{DD} = 5 V	V min/max
Power Supply Rejection	50		dBs typ
Reference Tempco	±100		ppm/°C typ
ANALOG INPUTS/REFERENCE INPUTS			
Primary ADC			
Differential Input Voltage Ranges[9, 10]		External Reference Voltage = 2.5 V RN2, RN1, RN0 of ADC0CON Set to	
Bipolar Mode (ADC0CON3 = 0)	±20	0 0 0 (Unipolar Mode 0 to 20 mV)	mV
	±40	0 0 1 (Unipolar Mode 0 to 40 mV)	mV
	±80	0 1 0 (Unipolar Mode 0 to 80 mV)	mV
	±160	0 1 1 (Unipolar Mode 0 to 160 mV)	mV
	±320	1 0 0 (Unipolar Mode 0 to 320 mV)	mV
	±640	1 0 1 (Unipolar Mode 0 to 640 mV)	mV
	±1.28	1 1 0 (Unipolar Mode 0 to 1.28 V)	V
	±2.56	1 1 1 (Unipolar Mode 0 to 2.56 V)	V
Analog Input Current[2]	±1		nA max
Analog Input Current Drift	±5		pA/°C typ
Absolute AIN Voltage Limits	AGND + 100 mV		V min
	AV_{DD} – 100 mV		V max
Auxiliary ADC			
Input Voltage Range[9, 10]	0 to V_{REF}	Unipolar Mode, for Bipolar Mode See Note 11	V
Average Analog Input Current	125	Input Current Will Vary with Input	nA/V typ
Average Analog Input Current Drift[2]	±2	Voltage on the Unbuffered Auxiliary ADC	pA/V/°C typ
Absolute AIN Voltage Limits[11]	AGND – 30 mV		V min
	AV_{DD} + 30 mV		V max
External Reference Inputs			
REFIN(+) to REFIN(–) Range[2]	1		V min
	AV_{DD}		V max
Average Reference Input Current	1	Both ADCs Enabled	µA/V typ
Average Reference Input Current Drift	±0.1		nA/V/°C typ
'NO Ext. REF' Trigger Voltage	0.3	NOXREF Bit Active if V_{REF} < 0.3 V	V min
	0.65	NOXREF Bit Inactive if V_{REF} > 0.65 V	V max
ADC SYSTEM CALIBRATION			
Full-Scale Calibration Limit	+1.05 × FS		V max
Zero-Scale Calibration Limit	–1.05 × FS		V min
Input Span	0.8 × FS		V min
	2.1 × FS		V max
ANALOG (DAC) OUTPUTS			
Voltage Range	0 to V_{REF}	DACRN = 0 in DACCON SFR	V typ
	0 to AV_{DD}	DACRN = 1 in DACCON SFR	V typ
Resistive Load	10	From DAC Output to AGND	kΩ typ
Capacitive Load	100	From DAC Output to AGND	pF typ
Output Impedance	0.5		Ω typ
I_{SINK}	50		µA typ
TEMPERATURE SENSOR			
Accuracy	±2		°C typ
Thermal Impedance (θ_{JA})	90		°C/W typ

Parameter	ADuC824BS	Test Conditions/Comments	Unit
TRANSDUCER BURNOUT CURRENT SOURCES			
AIN+ Current	–100	AIN+ is the Selected Positive Input to the Primary ADC	nA typ
AIN– Current	+100	AIN– is the Selected Negative Input to the Auxiliary ADC	nA typ
Initial Tolerance @ 25°C Drift	±10		% typ
Drift	0.03		%/°C typ
EXCITATION CURRENT SOURCES			
Output Current	–200	Available from Each Current Source	µA typ
Initial Tolerance @ 25°C	±10		% typ
Drift	200		ppm/°C typ
Initial Current Matching @ 25°C	±1	Matching Between Both Current Sources	% typ
Drift Matching	20		ppm/°C typ
Line Regulation (AV_{DD})	1	AV_{DD} = 5 V + 5%	µA/V typ
Load Regulation	0.1		µA/V typ
Output Compliance	AV_{DD} – 0.6		V max
	AGND		min
LOGIC INPUTS			
All Inputs Except SCLOCK, RESET, and XTAL1			
V_{INL}, Input Low Voltage	0.8	DV_{DD} = 5 V	V max
	0.4	DV_{DD} = 3 V	V max
V_{INH}, Input High Voltage	2.0		V min
SCLOCK and RESET Only (Schmitt-Triggered Inputs)[2]			
V_{T+}	1.3/3	DV_{DD} = 5 V	V min/V max
	0.95/2.5	DV_{DD} = 3 V	V min/V max
V_{T-}	0.8/1.4	DV_{DD} = 5 V	V min/V max
	0.4/1.1	DV_{DD} = 3 V	V min/V max
$V_{T+} – V_{T-}$	0.3/0.85	DV_{DD} = 5 V	V min/V max
	0.3/0.85	DV_{DD} = 3 V	V min/V max
Input Currents			
Port 0, P1.2–P1.7, $\overline{EA}$	±10	V_{IN} = 0 V or V_{DD}	µA max
SCLOCK, SDATA/MOSI, MISO, $\overline{SS}$[12]	–10 min, –40 max	V_{IN} = 0 V, DV_{DD} = 5 V, Internal Pull-Up	µA min/µA max
	±10	V_{IN} = V_{DD}, DV_{DD} = 5 V	µA max
RESET	±10	V_{IN} = 0 V, DV_{DD} = 5 V	µA max
	35 min, 105 max	V_{IN} = V_{DD}, DV_{DD} = 5 V, Internal Pull-Down	µA min/µA max
P1.0, P1.1, Ports 2 and 3	±10	V_{IN} = V_{DD}, DV_{DD} = 5 V	µA max
	–180	V_{IN} = 2 V, DV_{DD} = 5 V	µA min
	–660		µA max
	–20	V_{IN} = 450 mV, DV_{DD} = 5 V	µA min
	–75		µA max
Input Capacitance	5	All Digital Inputs	pF typ
CRYSTAL OSCILLATOR (XTAL1 AND XTAL2)			
Logic Inputs, XTAL1 Only			
V_{INL}, Input Low Voltage	0.8	DV_{DD} = 5 V	V max
	0.4	DV_{DD} = 3 V	V max
V_{INH}, Input High Voltage	3.5	DV_{DD} = 5 V	V min
	2.5	DV_{DD} = 3 V	V min
XTAL1 Input Capacitance	18		pF typ
XTAL2 Output Capacitance	18		pF typ

ADuC824–SPECIFICATIONS[1]

Parameter	ADuC824BS	Test Conditions/Comments	Unit
LOGIC OUTPUTS (Not Including XTAL2)[2]			
V_{OH}, Output High Voltage	2.4	V_{DD} = 5 V, I_{SOURCE} = 80 µA	V min
	2.4	V_{DD} = 3 V, I_{SOURCE} = 20 µA	V min
V_{OL}, Output Low Voltage[13]	0.4	I_{SINK} = 8 mA, SCLOCK, SDATA/MOSI	V max
	0.4	I_{SINK} = 10 mA, P1.0 and P1.1	V max
	0.4	I_{SINK} = 1.6 mA, All Other Outputs	V max
Floating State Leakage Current	±10		µA max
Floating State Output Capacitance	5		pF typ
POWER SUPPLY MONITOR (PSM)			
AV_{DD} Trip Point Selection Range	2.63	Four Trip Points Selectable in This Range	V min
	4.63	Programmed via TPA1–0 in PSMCON	V max
AV_{DD} Power Supply Trip Point Accuracy	±3.5		% max
DV_{DD} Trip Point Selection Range	2.63	Four Trip Points Selectable in This Range	V min
	4.63	Programmed via TPD1–0 in PSMCON	V max
DV_{DD} Power Supply Trip Point Accuracy	±3.5		% max
WATCHDOG TIMER (WDT)			
Timeout Period	0	Nine Timeout Periods in This Range	ms min
	2000	Programmed via PRE3–0 in WDCON	ms max
MCU CORE CLOCK RATE		Clock Rate Generated via On-Chip PLL	
MCU Clock Rate[2]	98.3	Programmable via CD2–0 Bits in PLLCON SFR	kHz min
	12.58		MHz max
START-UP TIME			
At Power-On	300		ms typ
From Idle Mode	1		ms typ
From Power-Down Mode			
Oscillator Running		OSC_PD Bit = 0 in PLLCON SFR	
Wakeup with $\overline{INT0}$ Interrupt	1		ms typ
Wakeup with SPI/I^2C Interrupt	1		ms typ
Wakeup with TIC Interrupt	1		ms typ
Wakeup with External RESET	3.4		ms typ
Oscillator Powered Down		OSC_PD Bit = 1 in PLLCON SFR	
Wakeup with External RESET	0.9		sec typ
After External RESET in Normal Mode	3.3		ms typ
After WDT Reset in Normal Mode	3.3	Controlled via WDCON SFR	ms typ
FLASH/EE MEMORY RELIABILITY CHARACTERISTICS[14]			
Endurance[15]	100,000		Cycles min
Data Retention[16]	100		Years min
POWER REQUIREMENTS		DV_{DD} and AV_{DD} Can Be Set Independently	
Power Supply Voltages			
AV_{DD}, 3 V Nominal Operation	2.7		V min
	3.6		V max
AV_{DD}, 5 V Nominal Operation	4.75		V min
	5.25		V max
DV_{DD}, 3 V Nominal Operation	2.7		V min
	3.6		V max
DV_{DD}, 5 V Nominal Operation	4.75		V min
	5.25		V max

Parameter	ADuC824BS	Test Conditions/Comments	Unit
POWER REQUIREMENTS (continued)			
Power Supply Currents Normal Mode[17, 18]			
DV_{DD} Current	4	DV_{DD} = 4.75 V to 5.25 V, Core CLK = 1.57 MHz	mA max
	2.1	DV_{DD} = 2.7 V to 3.6 V, Core CLK = 1.57 MHz	mA max
AV_{DD} Current	170	AV_{DD} = 5.25 V, Core CLK = 1.57 MHz	µA max
DV_{DD} Current	15	DV_{DD} = 4.75 V to 5.25 V, Core CLK = 12.58 MHz	mA max
	8	DV_{DD} = 2.7 V to 3.6 V, Core CLK = 12.58 MHz	mA max
AV_{DD} Current	170	AV_{DD} = 5.25 V, Core CLK = 12.58 MHz	µA max
Power Supply Currents Idle Mode[17, 18]			
DV_{DD} Current	1.2	DV_{DD} = 4.75 V to 5.25 V, Core CLK = 1.57 MHz	mA max
	750	DV_{DD} = 2.7 V to 3.6 V, Core CLK = 1.57 MHz	µA typ
AV_{DD} Current	140	Measured @ AV_{DD} = 5.25 V, Core CLK = 1.57 MHz	µA typ
DV_{DD} Current	2	DV_{DD} = 4.75 V to 5.25 V, Core CLK = 12.58 MHz	mA typ
	1	DV_{DD} = 2.7 V to 3.6 V, Core CLK = 12.58 MHz	mA typ
AV_{DD} Current	140	Measured at AV_{DD} = 5.25 V, Core CLK = 12.58 MHz	µA typ
Power Supply Currents Power-Down Mode[17, 18]		Core CLK = 1.57 MHz or 12.58 MHz	
DV_{DD} Current	50	DV_{DD} = 4.75 V to 5.25 V, Osc. On, TIC On	µA max
	20	DV_{DD} = 2.7 V to 3.6 V, Osc. On, TIC On	µA max
AV_{DD} Current	1	Measured at AV_{DD} = 5.25 V, Osc. On or Osc. Off	µA max
DV_{DD} Current	20	DV_{DD} = 4.75 V to 5.25 V, Osc. Off	µA max
	5	DV_{DD} = 2.7 V to 3.6 V, Osc. Off	µA typ
Typical Additional Power Supply Currents (AI_{DD} and DI_{DD})		Core CLK = 1.57 MHz, AV_{DD} = DV_{DD} = 5 V	
PSM Peripheral	50		µA typ
Primary ADC	1		mA typ
Auxiliary ADC	500		µA typ
DAC	150		µA typ
Dual Current Sources	400		µA typ

NOTES

[1] Temperature Range –40°C to +85°C.

[2] These numbers are not production tested but are guaranteed by Design and/or Characterization data on production release.

[3] System Zero-Scale Calibration can remove this error.

[4] The primary ADC is factory calibrated at 25°C with AV_{DD} = DV_{DD} = 5 V yielding this full-scale error of 10 µV. If user power supply or temperature conditions are significantly different than these, an Internal Full-Scale Calibration will restore this error to 10 µV. A system zero-scale and full-scale calibration will remove this error altogether.

[5] Gain Error Drift is a span drift. To calculate Full-Scale Error Drift, add the Offset Error Drift to the Gain Error Drift times the full-scale input.

[6] The auxiliary ADC is factory calibrated at 25°C with AV_{DD} = DV_{DD} = 5 V yielding this full-scale error of –2.5 LSB. A system zero-scale and full-scale calibration will remove this error altogether.

[7] DAC linearity and AC Specifications are calculated using:
reduced code range of 48 to 4095, 0 to V_{REF},
reduced code range of 48 to 3995, 0 to V_{DD}.

[8] Gain Error is a measure of the span error of the DAC.

[9] In general terms, the bipolar input voltage range to the primary ADC is given by $Range_{ADC} = \pm(V_{REF}\ 2^{RN})/125$, where:
V_{REF} = REFIN(+) to REFIN(–) voltage and V_{REF} = 1.25 V when internal ADC V_{REF} is selected.
RN = decimal equivalent of RN2, RN1, RN0,
e.g., V_{REF} = 2.5 V and RN2, RN1, RN0 = 1, 1, 0 the $Range_{ADC}$ = ±1.28 V.
In unipolar mode the effective range is 0 V to 1.28 V in our example.

[10] 1.25 V is used as the reference voltage to the ADC when internal V_{REF} is selected via XREF0 and XREF1 bits in ADC0CON and ADC1CON respectively.

[11] In bipolar mode, the Auxiliary ADC can only be driven to a minimum of A_{GND} – 30 mV as indicated by the Auxiliary ADC absolute AIN voltage limits. The bipolar range is still $-V_{REF}$ to $+V_{REF}$; however, the negative voltage is limited to –30 mV.

[12] Pins configured in I^2C-compatible mode or SPI mode, pins configured as digital inputs during this test.

[13] Pins configured in I^2C-compatible mode only.

[14] Flash/EE Memory Reliability Characteristics apply to both the Flash/EE program memory and Flash/EE data memory.

[15] Endurance is qualified to 100 Kcycles as per JEDEC Std. 22 method A117 and measured at –40°C, +25°C and +85°C, typical endurance at 25°C is 700 Kcycles.

[16] Retention lifetime equivalent at junction temperature (T_J) = 55°C as per JEDEC Std. 22, Method A117. Retention lifetime based on an activation energy of 0.6eV will derate with junction temperature as shown in Figure 27 in the Flash/EE Memory description section of this data sheet.

[17] Power Supply current consumption is measured in Normal, Idle, and Power-Down Modes under the following conditions:
Normal Mode: Reset = 0.4 V, Digital I/O pins = open circuit, Core Clk changed via CD bits in PLLCON, Core Executing internal software loop.
Idle Mode: Reset = 0.4 V, Digital I/O pins = open circuit, Core Clk changed via CD bits in PLLCON, PCON.0 = 1, Core Execution suspended in idle mode.
Power-Down Mode: Reset = 0.4 V, All P0 pins and P1.2–P1.7 pins = 0.4 V, All other digital I/O pins are open circuit, Core Clk changed via CD bits in PLLCON, PCON.1 = 1, Core Execution suspended in power-down mode, OSC turned ON or OFF via OSC_PD bit (PLLCON.7) in PLLCON SFR.

[18] DV_{DD} power supply current will increase typically by 3 mA (3 V operation) and 10 mA (5 V operation) during a Flash/EE memory program or erase cycle.

Specifications subject to change without notice.

TIMING SPECIFICATIONS[1, 2, 3] (AV_{DD} = 2.7 V to 3.6 V or 4.75 V to 5.25 V, DV_{DD} = 2.7 V to 3.6 V or 4.75 V to 5.25 V; all specifications T_{MIN} to T_{MAX} unless otherwise noted.)

Parameter		32.768 kHz External Crystal Min	Typ	Max	Unit	Figure
CLOCK INPUT (External Clock Driven XTAL1)						
t_{CK}	XTAL1 Period		30.52		µs	1
t_{CKL}	XTAL1 Width Low		15.24		µs	1
t_{CKH}	XTAL1 Width High		15.24		µs	1
t_{CKR}	XTAL1 Rise Time		20		ns	1
t_{CKF}	XTAL1 Fall Time		20		ns	1
$1/t_{CORE}$	ADuC824 Core Clock Frequency[4]	0.098		12.58	MHz	
t_{CORE}	ADuC824 Core Clock Period[5]		0.636		µs	
t_{CYC}	ADuC824 Machine Cycle Time[6]	0.95	7.6	122.45	µs	

NOTES

[1]AC inputs during testing are driven at DV_{DD} – 0.5 V for a Logic 1, and 0.45 V for a Logic 0. Timing measurements are made at V_{IH} min for a Logic 1, and V_{IL} max for a Logic 0 as shown in Figure 2.

[2]For timing purposes, a port pin is no longer floating when a 100 mV change from load voltage occurs. A port pin begins to float when a 100 mV change from the loaded V_{OH}/V_{OL} level occurs as shown in Figure 2.

[3]C_{LOAD} for Port0, ALE, $\overline{PSEN}$ outputs = 100 pF; C_{LOAD} for all other outputs = 80 pF unless otherwise noted.

[4]ADuC824 internal PLL locks onto a multiple (384 times) the external crystal frequency of 32.768 kHz to provide a Stable 12.583 MHz internal clock for the system. The core can operate at this frequency or at a binary submultiple called Core_Clk, selected via the PLLCON SFR.

[5]This number is measured at the default Core_Clk operating frequency of 1.57 MHz.

[6]ADuC824 Machine Cycle Time is nominally defined as 12/Core_CLK.

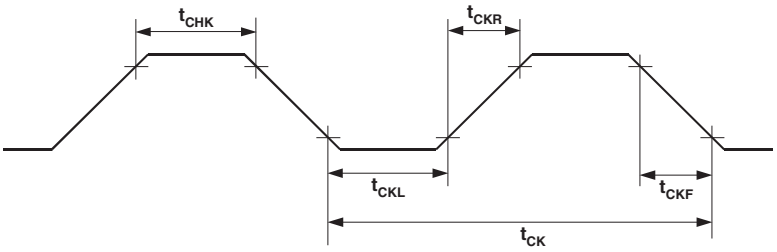

Figure 1. XTAL1 Input

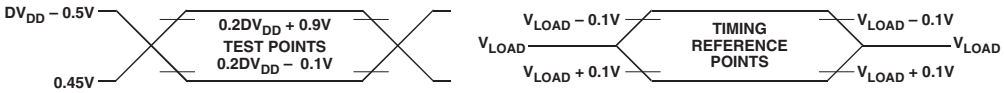

Figure 2. Timing Waveform Characteristics

Parameter		12.58 MHz Core_Clk Min	12.58 MHz Core_Clk Max	Variable Core_Clk Min	Variable Core_Clk Max	Unit	Figure
EXTERNAL PROGRAM MEMORY							
t_{LHLL}	ALE Pulsewidth	119		$2t_{CORE} - 40$		ns	3
t_{AVLL}	Address Valid to ALE Low	39		$t_{CORE} - 40$		ns	3
t_{LLAX}	Address Hold after ALE Low	49		$t_{CORE} - 30$		ns	3
t_{LLIV}	ALE Low to Valid Instruction In		218		$4t_{CORE} - 100$	ns	3
t_{LLPL}	ALE Low to $\overline{PSEN}$ Low	49		$t_{CORE} - 30$		ns	3
t_{PLPH}	$\overline{PSEN}$ Pulsewidth	193		$3t_{CORE} - 45$		ns	3
t_{PLIV}	$\overline{PSEN}$ Low to Valid Instruction In		133		$3t_{CORE} - 105$	ns	3
t_{PXIX}	Input Instruction Hold after $\overline{PSEN}$	0		0		ns	3
t_{PXIZ}	Input Instruction Float after $\overline{PSEN}$		54		$t_{CORE} - 25$	ns	3
t_{AVIV}	Address to Valid Instruction In		292		$5t_{CORE} - 105$	ns	3
t_{PLAZ}	$\overline{PSEN}$ Low to Address Float		25		25	ns	3
t_{PHAX}	Address Hold after $\overline{PSEN}$ High	0		0		ns	3

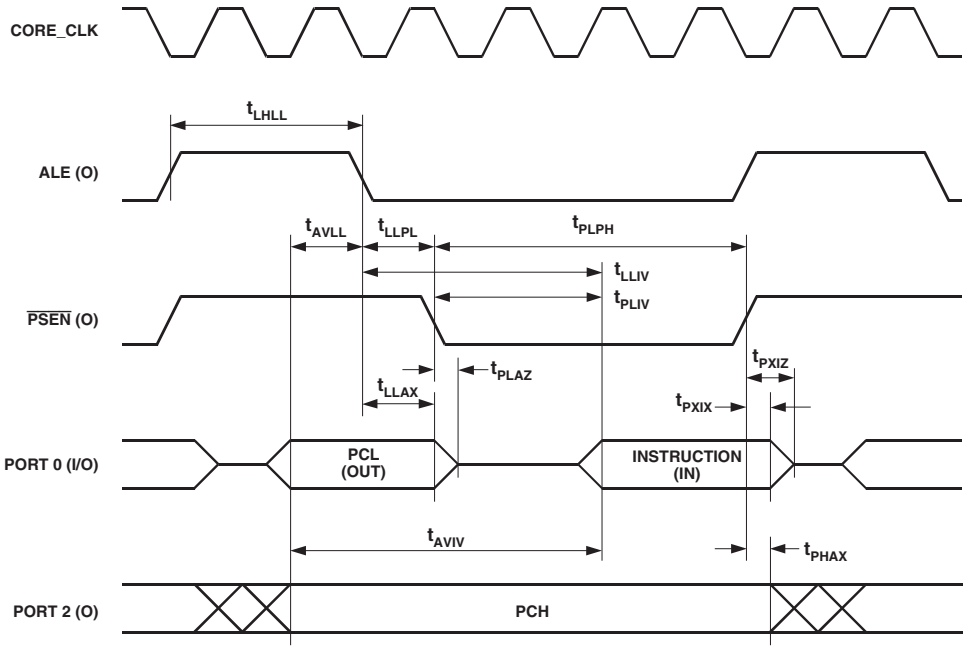

Figure 3. External Program Memory Read Cycle

Parameter		12.58 MHz Core_Clk Min	Max	Variable Core_Clk Min	Max	Unit	Figure
EXTERNAL DATA MEMORY READ CYCLE							
t_{RLRH}	$\overline{RD}$ Pulsewidth	377		$6t_{CORE} - 100$		ns	4
t_{AVLL}	Address Valid after ALE Low	39		$t_{CORE} - 40$		ns	4
t_{LLAX}	Address Hold after ALE Low	44		$t_{CORE} - 35$		ns	4
t_{RLDV}	$\overline{RD}$ Low to Valid Data In		232		$5t_{CORE} - 165$	ns	4
t_{RHDX}	Data and Address Hold after $\overline{RD}$	0		0		ns	4
t_{RHDZ}	Data Float after $\overline{RD}$		89		$2t_{CORE} - 70$	ns	4
t_{LLDV}	ALE Low to Valid Data In		486		$8t_{CORE} - 150$	ns	4
t_{AVDV}	Address to Valid Data In		550		$9t_{CORE} - 165$	ns	4
t_{LLWL}	ALE Low to $\overline{RD}$ Low	188	288	$3t_{CORE} - 50$	$3t_{CORE} + 50$	ns	4
t_{AVWL}	Address Valid to $\overline{RD}$ Low	188		$4t_{CORE} - 130$		ns	4
t_{RLAZ}	$\overline{RD}$ Low to Address Float		0		0	ns	4
t_{WHLH}	$\overline{RD}$ High to ALE High	39	119	$t_{CORE} - 40$	$t_{CORE} + 40$	ns	4

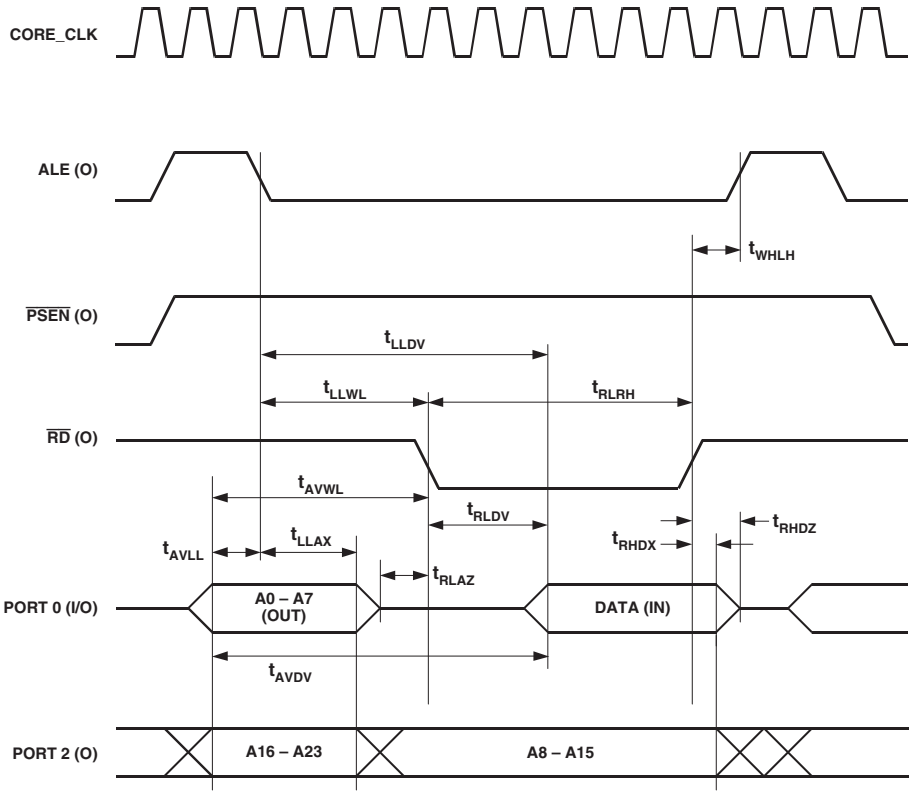

Figure 4. External Data Memory Read Cycle

Parameter		12.58 MHz Core_Clk Min	Max	Variable Core_Clk Min	Max	Unit	Figure
EXTERNAL DATA MEMORY WRITE CYCLE							
t_{WLWH}	$\overline{WR}$ Pulsewidth	377		$6t_{CORE} - 100$		ns	5
t_{AVLL}	Address Valid after ALE Low	39		$t_{CORE} - 40$		ns	5
t_{LLAX}	Address Hold after ALE Low	44		$t_{CORE} - 35$		ns	5
t_{LLWL}	ALE Low to $\overline{WR}$ Low	188	288	$3t_{CORE} - 50$	$3t_{CORE} + 50$	ns	5
t_{AVWL}	Address Valid to $\overline{WR}$ Low	188		$4t_{CORE} - 130$		ns	5
t_{QVWX}	Data Valid to $\overline{WR}$ Transition	29		$t_{CORE} - 50$		ns	5
t_{QVWH}	Data Setup before $\overline{WR}$	406		$7t_{CORE} - 150$		ns	5
t_{WHQX}	Data and Address Hold after $\overline{WR}$	29		$t_{CORE} - 50$		ns	5
t_{WHLH}	$\overline{WR}$ High to ALE High	39	119	$t_{CORE} - 40$	$t_{CORE} + 40$	ns	5

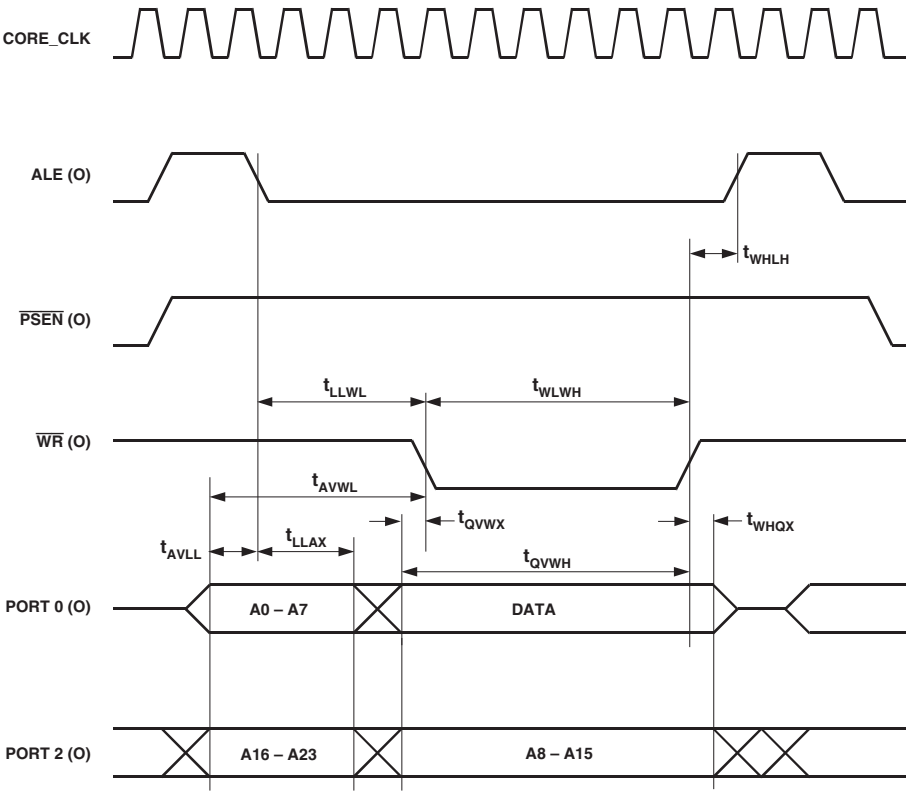

Figure 5. External Data Memory Write Cycle

Parameter		12.58 MHz Core_Clk Min	Typ	Max	Variable Core_Clk Min	Typ	Max	Unit	Figure
UART TIMING (Shift Register Mode)									
t_{XLXL}	Serial Port Clock Cycle Time		0.95			$12t_{CORE}$		µs	6
t_{QVXH}	Output Data Setup to Clock	662			$10t_{CORE} - 133$			ns	6
t_{DVXH}	Input Data Setup to Clock	292			$2t_{CORE} + 133$			ns	6
t_{XHDX}	Input Data Hold after Clock	0			0			ns	6
t_{XHQX}	Output Data Hold after Clock	42			$2t_{CORE} - 117$			ns	6

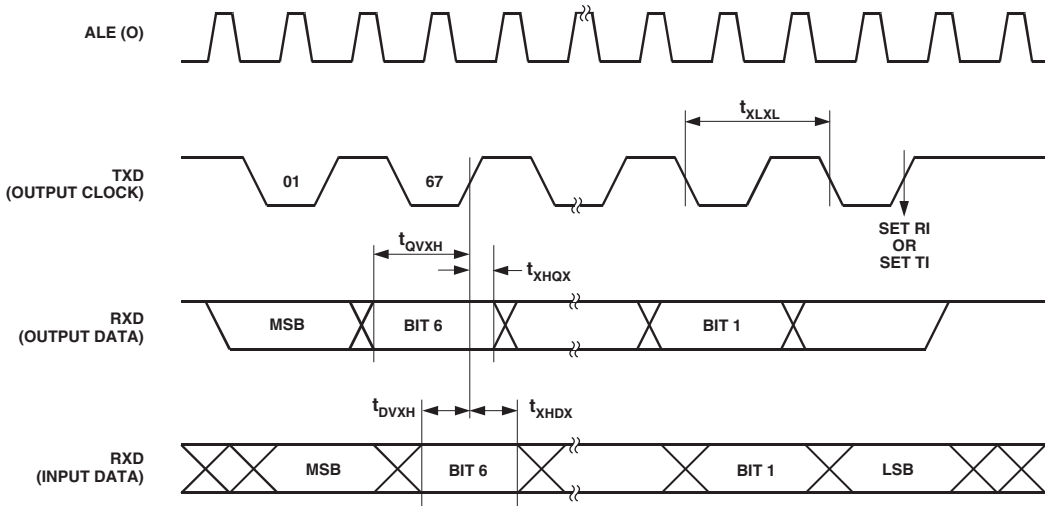

Figure 6. UART Timing in Shift Register Mode

Parameter		Min	Max	Unit	Figure
I^2C-COMPATIBLE INTERFACE TIMING					
t_L	SCLOCK Low Pulsewidth	4.7		µs	7
t_H	SCLOCK High Pulsewidth	4.0		µs	7
t_{SHD}	Start Condition Hold Time	0.6		µs	7
t_{DSU}	Data Setup Time	100		µs	7
t_{DHD}	Data Hold Time		0.9	µs	7
t_{RSU}	Setup Time for Repeated Start	0.6		µs	7
t_{PSU}	Stop Condition Setup Time	0.6		µs	7
t_{BUF}	Bus Free Time between a STOP Condition and a START Condition	1.3		µs	7
t_R	Rise Time of Both SCLOCK and SDATA		300	ns	7
t_F	Fall Time of Both SCLOCK and SDATA		300	ns	7
t_{SUP}*	Pulsewidth of Spike Suppressed		50	ns	7

*Input filtering on both the SCLOCK and SDATA inputs suppresses noise spikes less than 50 ns.

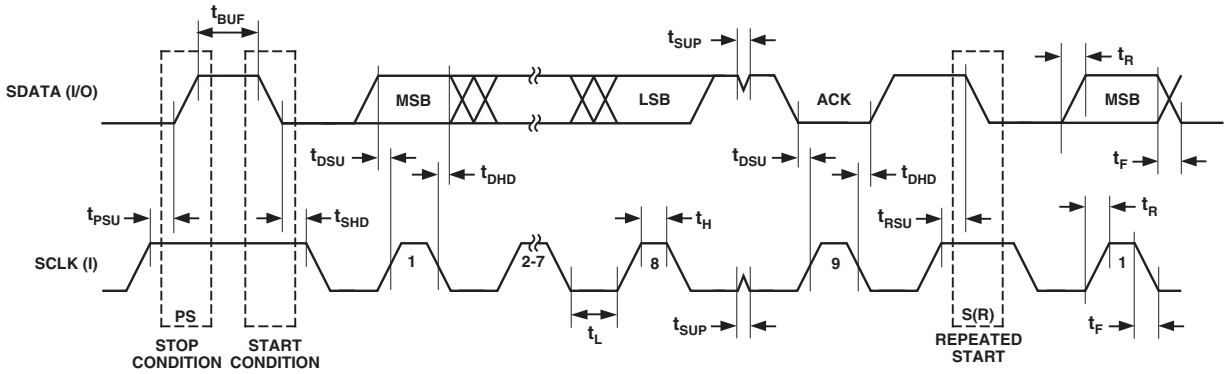

Figure 7. I^2C-Compatible Interface Timing

Parameter		Min	Typ	Max	Unit	Figure
SPI MASTER MODE TIMING (CPHA = 1)						
t_{SL}	SCLOCK Low Pulsewidth*		630		ns	8
t_{SH}	SCLOCK High Pulsewidth*		630		ns	8
t_{DAV}	Data Output Valid after SCLOCK Edge			50	ns	8
t_{DSU}	Data Input Setup Time before SCLOCK Edge	100			ns	8
t_{DHD}	Data Input Hold Time after SCLOCK Edge	100			ns	8
t_{DF}	Data Output Fall Time		10	25	ns	8
t_{DR}	Data Output Rise Time		10	25	ns	8
t_{SR}	SCLOCK Rise Time		10	25	ns	8
t_{SF}	SCLOCK Fall Time		10	25	ns	8

*Characterized under the following conditions:
a. Core clock divider bits CD2, CD1, and CD0 bits in PLLCON SFR set to 0, 1, and 1 respectively, i.e., core clock frequency = 1.57 MHz and
b. SPI bit-rate selection bits SPR1 and SPR0 bits in SPICON SFR set to 0 and 0 respectively.

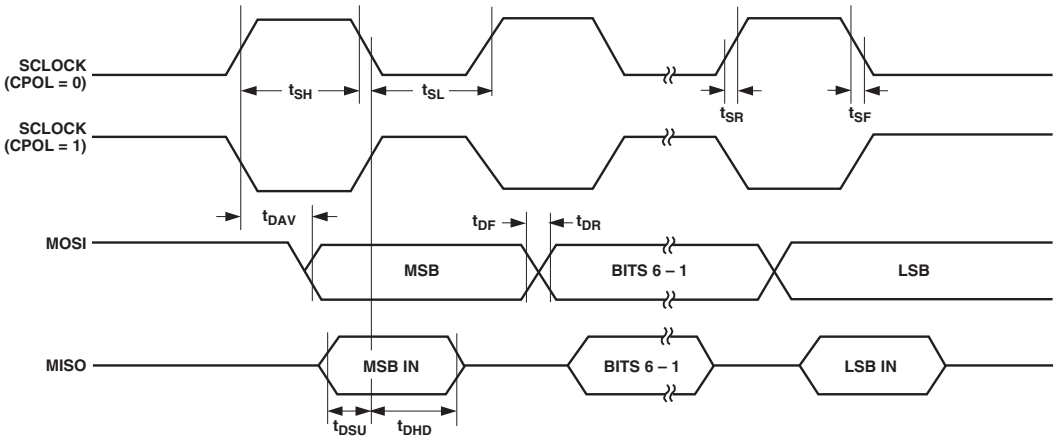

Figure 8. SPI Master Mode Timing (CPHA = 1)

Parameter		Min	Typ	Max	Unit	Figure
SPI MASTER MODE TIMING (CPHA = 0)						
t_{SL}	SCLOCK Low Pulsewidth*		630		ns	9
t_{SH}	SCLOCK High Pulsewidth*		630		ns	9
t_{DAV}	Data Output Valid after SCLOCK Edge			50	ns	9
t_{DOSU}	Data Output Setup before SCLOCK Edge			150	ns	9
t_{DSU}	Data Input Setup Time before SCLOCK Edge	100			ns	9
t_{DHD}	Data Input Hold Time after SCLOCK Edge	100			ns	9
t_{DF}	Data Output Fall Time		10	25	ns	9
t_{DR}	Data Output Rise Time		10	25	ns	9
t_{SR}	SCLOCK Rise Time		10	25	ns	9
t_{SF}	SCLOCK Fall Time		10	25	ns	9

*Characterized under the following conditions:
a. Core clock divider bits CD2, CD1 and CD0 bits in PLLCON SFR set to 0, 1, and 1 respectively, i.e., core clock frequency = 1.57 MHz and
b. SPI bit-rate selection bits SPR1 and SPR0 bits in SPICON SFR set to 0 and 0 respectively.

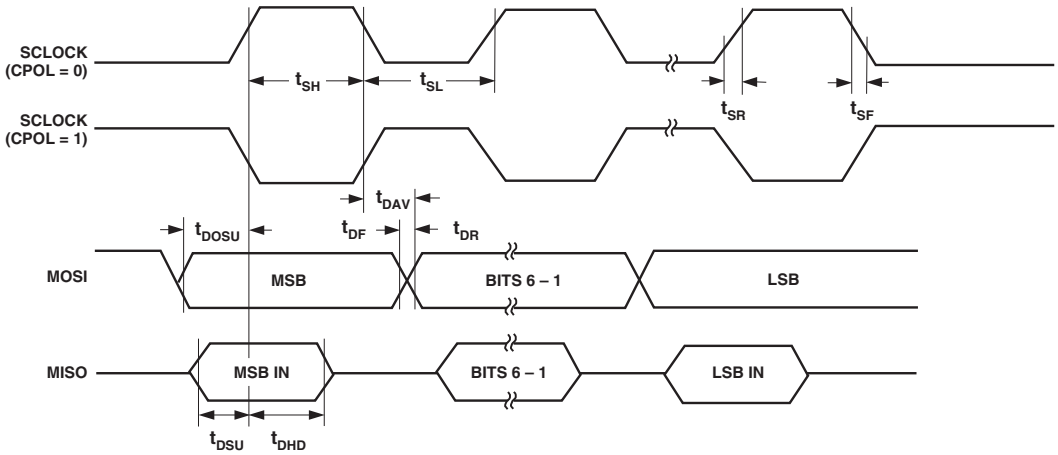

Figure 9. SPI Master Mode Timing (CPHA = 0)

Parameter		Min	Typ	Max	Unit	Figure
SPI SLAVE MODE TIMING (CPHA = 1)						
t_{SS}	$\overline{SS}$ to SCLOCK Edge	0			ns	10
t_{SL}	SCLOCK Low Pulsewidth		330		ns	10
t_{SH}	SCLOCK High Pulsewidth		330		ns	10
t_{DAV}	Data Output Valid after SCLOCK Edge			50	ns	10
t_{DSU}	Data Input Setup Time before SCLOCK Edge	100			ns	10
t_{DHD}	Data Input Hold Time after SCLOCK Edge	100			ns	10
t_{DF}	Data Output Fall Time		10	25	ns	10
t_{DR}	Data Output Rise Time		10	25	ns	10
t_{SR}	SCLOCK Rise Time		10	25	ns	10
t_{SF}	SCLOCK Fall Time		10	25	ns	10
t_{SFS}	$\overline{SS}$ High after SCLOCK Edge	0			ns	10

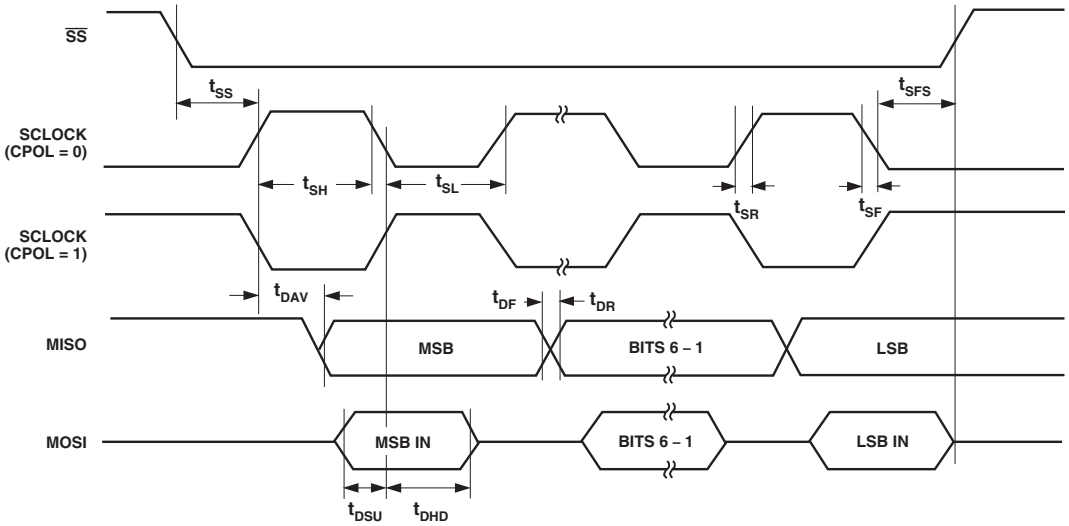

Figure 10. SPI Slave Mode Timing (CPHA = 1)

Parameter		Min	Typ	Max	Unit	Figure
SPI SLAVE MODE TIMING (CPHA = 0)						
t_{SS}	$\overline{SS}$ to SCLOCK Edge	0			ns	11
t_{SL}	SCLOCK Low Pulsewidth		330		ns	11
t_{SH}	SCLOCK High Pulsewidth		330		ns	11
t_{DAV}	Data Output Valid after SCLOCK Edge			50	ns	11
t_{DSU}	Data Input Setup Time before SCLOCK Edge	100			ns	11
t_{DHD}	Data Input Hold Time after SCLOCK Edge	100			ns	11
t_{DF}	Data Output Fall Time		10	25	ns	11
t_{DR}	Data Output Rise Time		10	25	ns	11
t_{SR}	SCLOCK Rise Time		10	25	ns	11
t_{SF}	SCLOCK Fall Time		10	25	ns	11
t_{SSR}	$\overline{SS}$ to SCLOCK Edge			50	ns	11
t_{DOSS}	Data Output Valid after $\overline{SS}$ Edge			20	ns	11
t_{SFS}	$\overline{SS}$ High after SCLOCK Edge	0			ns	11

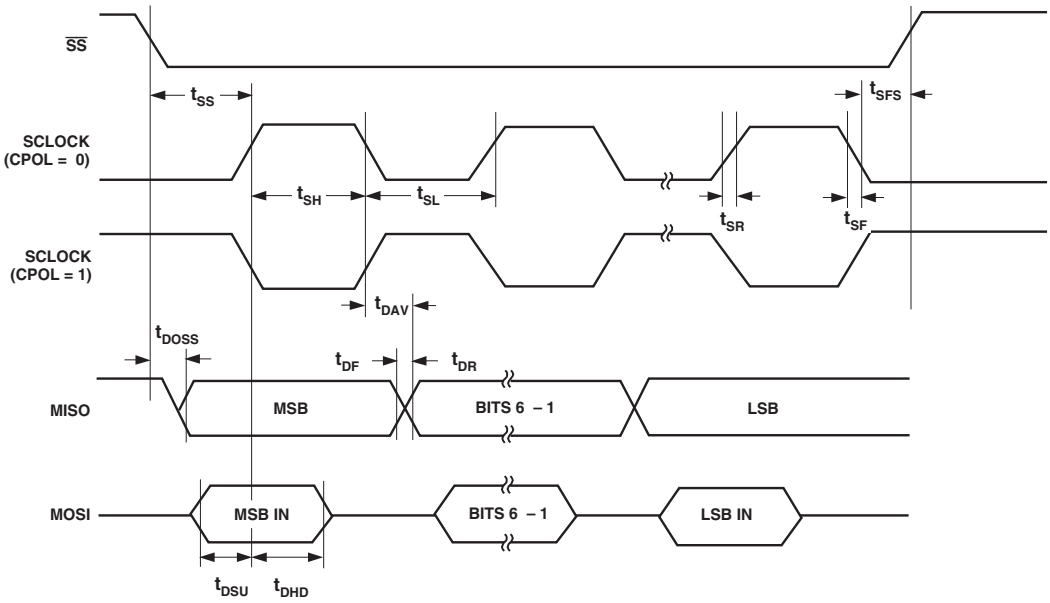

Figure 11. SPI Slave Mode Timing (CPHA = 0)

ABSOLUTE MAXIMUM RATINGS[1]

(T_A = 25°C unless otherwise noted)

AV_{DD} to AGND	–0.3 V to +7 V
AV_{DD} to DGND	–0.3 V to +7 V
DV_{DD} to AGND	–0.3 V to +7 V
DV_{DD} to DGND	–0.3 V to +7 V
AGND to DGND[2]	–0.3 V to +0.3 V
AV_{DD} to DV_{DD}	–2 V to +5 V
Analog Input Voltage to AGND[3]	–0.3 V to AV_{DD} +0.3 V
Reference Input Voltage to AGND	–0.3 V to AV_{DD} +0.3 V
AIN/REFIN Current (Indefinite)	30 mA
Digital Input Voltage to DGND	–0.3 V to DV_{DD} +0.3 V
Digital Output Voltage to DGND	–0.3 V to DV_{DD} +0.3 V
Operating Temperature Range	–40°C to +85°C
Storage Temperature Range	–65°C to +150°C
Junction Temperature	150°C
θ_{JA} Thermal Impedance	90°C/W
Lead Temperature, Soldering	
Vapor Phase (60 sec)	215°C
Infrared (15 sec)	220°C

NOTES

[1]Stresses above those listed under Absolute Maximum Ratings may cause permanent damage to the device. This is a stress rating only; functional operation of the device at these or any other conditions above those listed in the operational sections of this specification is not implied. Exposure to absolute maximum rating conditions for extended periods may affect device reliability.

[2]AGND and DGND are shorted internally on the ADuC824.

[3]Applies to P1.2 to P1.7 pins operating in analog or digital input modes.

PIN CONFIGURATION
52-Lead MQFP

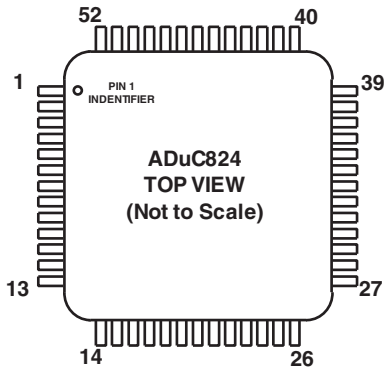

ORDERING GUIDE

Model	Temperature Range	Package Description	Package Option
ADuC824BS	–40°C to +85°C	52-Lead Plastic Quad Flatpack	S-52

QuickStart Development System Model	Description
Eval-ADUC824QS	Development System for the ADuC824 MicroConverter, Containing: Evaluation Board Serial Port Cable Plug-In Power Supply Windows® Serial Downloader (WSD) Windows Debugger (DeBug) Windows ADuC824 Simulator (ADSIM) Windows ADC Analysis Software Program (WASP) 8051 Assembler (Metalink) C-Compiler (Keil) Evaluation Copy Limited to 2 Kcode Example Code Documentation

CAUTION

ESD (electrostatic discharge) sensitive device. Electrostatic charges as high as 4000 V readily accumulate on the human body and test equipment and can discharge without detection. Although the ADuC824 features proprietary ESD protection circuitry, permanent damage may occur on devices subjected to high-energy electrostatic discharges. Therefore, proper ESD precautions are recommended to avoid performance degradation or loss of functionality.

Windows is a registered trademark of Microsoft Corporation.

PIN FUNCTION DESCRIPTIONS

Pin No.	Mnemonic	Type*	Description
1	P1.0/T2	I/O	Port 1.0 can function as a digital input or digital output and has a pull-up configuration as described below for Port 3. P1.0 has an increased current drive sink capability of 10 mA and can also be used to provide a clock input to Timer 2. When Enabled, Counter 2 is incremented in response to a negative transition on the T2 input pin.
2	P1.1/T2EX	I/O	Port 1.1 can function as a digital input or digital output and has a pull-up configuration as described below for Port 3. P1.1 has an increased current drive sink capability of 10 mA and can also be used to provide a control input to Timer 2. When Enabled, a negative transition on the T2EX input pin will cause a Timer 2 capture or reload event.
3	P1.2/DAC/IEXC1	I/O	Port 1.2. This pin has no digital output driver; it can function as a digital input for which '0' must be written to the port bit. As a digital input, P1.2 must be driven high or low externally. The voltage output from the DAC can also be configured to appear at this pin. If the DAC output is not being used, one or both of the excitation current sources (200 μA or 2 × 200 μA) can be programmed to be sourced at this pin.
4	P1.3/AIN5/IEXC2	I	Port 1.3. This pin has no digital output driver, it can function as a digital input for which '0' must be written to the port bit. As a digital input, P1.3 must be driven high or low externally. This pin can provide an analog input (AIN5) to the auxiliary ADC and one or both of the excitation current sources (200 μA or 2 × 200 μA) can be programmed to be sourced at this pin.
5	AV_{DD}	S	Analog Supply Voltage, 3 V or 5 V
6	AGND	S	Analog Ground. Ground reference pin for the analog circuitry.
7	REFIN(–)	I	Reference input, negative terminal.
8	REFIN(+)	I	Reference input, positive terminal.
9–11	P1.4–P1.6	I	Port 1.4 to P1.6. These pins have no digital output drivers; they can function as digital inputs, for which '0' must be written to the respective port bit. As a digital input, these pins must be driven high or low externally. These port pins also have the following analog functionality:
	P1.4/AIN1	I	Primary ADC Channel, Positive Analog Input
	P1.5/AIN2	I	Primary ADC Channel, Negative Analog Input
	P1.6/AIN3	I	Auxiliary ADC Input or muxed Primary ADC Channel, Positive Analog Input
12	P1.7/AIN4/DAC	I/O	Port 1.7. This pin has no digital output driver; it can function as a digital input for which '0' must be written to the port bit. As a digital input, P1.7 must be driven high or low externally. This pin can provide an analog input (AIN4) to the auxiliary ADC or muxed Primary ADC Channel, Negative Analog Input. The voltage output from the DAC can also be configured to appear at this pin.
13	$\overline{SS}$	I	Slave Select Input for the SPI Interface. A weak pull-up is present on this pin.
14	MISO	I/O	Master Input/Slave Output for the SPI Interface. There is a weak pull-up on this input pin.
15	RESET	I	Reset Input. A high level on this pin for 24 core clock cycles while the oscillator is running resets the device. There is a weak pull-down and a Schmitt trigger input stage on this pin. External POR (power-on reset) circuitry must be added to drive the RESET pin as described later in this data sheet.
16–19	P3.0–P3.3	I/O	P3.0–P3.3 are bidirectional port pins with internal pull-up resistors. Port 3 pins that have 1s written to them are pulled high by the internal pull-up resistors, and in that state can be used as inputs. As inputs, Port 3 pins being pulled externally low will source current because of the internal pull-up resistors. When driving a 0-to-1 output transition, a strong pull-up is active for two core clock periods of the instruction cycle. Port 3 pins also have various secondary functions described below.
	P3.0/RXD	I/O	Receiver Data Input (asynchronous) or Data Input/Output (synchronous) of serial (UART) port.
	P3.1/TXD	I/O	Transmitter Data Output (asynchronous) or Clock Output (synchronous) of serial (UART) port.
	P3.2/$\overline{INT0}$	I/O	Interrupt 0, programmable edge or level triggered Interrupt input, which can be programmed to one of two priority levels. This pin can also be used as a gate control input to Timer0.

Pin No.	Mnemonic	Type*	Description
16–19	P3.0–P3.3 (*Continued*)		
	P3.3/$\overline{\text{INT1}}$	I/O	Interrupt 1, programmable edge-or level-triggered Interrupt input, which can be programmed to one of two priority levels. This pin can also be used as a gate control input to Timer1.
20, 34, 48	DV_{DD}	S	Digital supply, 3 V or 5 V.
21, 35, 47	DGND	S	Digital ground, ground reference point for the digital circuitry.
22–25	P3.4–P3.7	I/O	P3.4–P3.7 are bidirectional port pins with internal pull-up resistors. Port 3 pins that have 1s written to them are pulled high by the internal pull-up resistors, and in that state can be used as inputs. As inputs, Port 3 pins being pulled externally low will source current because of the internal pull-up resistors. When driving a 0-to-1 output transition, a strong pull-up is active for two core clock periods of the instruction cycle. Port 3 pins also have various secondary functions described below.
	P3.4/T0	I/O	Timer/Counter 0 Input.
	P3.5/T1	I/O	Timer/Counter 1 Input.
	P3.6/$\overline{\text{WR}}$	I/O	Write control signal, logic output. Latches the data byte from Port 0 into an external data memory.
	P3.7/$\overline{\text{RD}}$	I/O	Read control signal, logic output. Enables the data from an external data memory to Port 0.
26	SCLK	I/O	Serial interface clock for either the I^2C-compatible or SPI interface. As an input this pin is a Schmitt-triggered input and a weak internal pull-up is present on this pin unless it is outputting logic low.
27	SDATA/MOSI	I/O	Serial data I/O for the I^2C compatible interface or master output/slave input for the SPI interface. A weak internal pull-up is present on this pin unless it is outputting logic low.
28–31	P2.0–P2.3 (A8–A11) (A16–A19)	I/O	Port 2 is a bidirectional port with internal pull-up resistors. Port 2 pins that have 1s written to them are pulled high by the internal pull-up resistors, and in that state can be used as inputs. As inputs, Port 2 pins being pulled externally low will source current because of the internal pull-up resistors. Port 2 emits the high order address bytes during fetches from external program memory and middle and high order address bytes during accesses to the 24-bit external data memory space.
32	XTAL1	I	Input to the crystal oscillator inverter.
33	XTAL2	O	Output from the crystal oscillator inverter.
36–39	P2.4–P2.7 (A12–A15) (A20–A23)	I/O	Port 2 is a bidirectional port with internal pull-up resistors. Port 2 pins that have 1s written to them are pulled high by the internal pull-up resistors, and in that state they can be used as inputs. As inputs, Port 2 pins being pulled externally low will source current because of the internal pull-up resistors. Port 2 emits the high order address bytes during fetches from external program memory and middle and high order address bytes during accesses to the 24-bit external data memory space.
40	$\overline{\text{EA}}$	I/O	External Access Enable, Logic Input. When held high, this input enables the device to fetch code from internal program memory locations 0000H to 1FFFH. When held low, this input enables the device to fetch all instructions from external program memory. To determine the mode of code execution, i.e., internal or external, the $\overline{\text{EA}}$ pin is sampled at the end of an external RESET assertion or as part of a device power cycle. $\overline{\text{EA}}$ may also be used as an external emulation I/O pin and therefore the voltage level at this pin must not be changed during normal mode operation as it may cause an emulation interrupt that will halt code execution.
41	$\overline{\text{PSEN}}$	O	Program Store Enable, Logic Output. This output is a control signal that enables the external program memory to the bus during external fetch operations. It is active every six oscillator periods except during external data memory accesses. This pin remains high during internal program execution. $\overline{\text{PSEN}}$ can also be used to enable serial download mode when pulled low through a resistor at the end of an external RESET assertion or as part of a device power cycle.
42	ALE	O	Address Latch Enable, Logic Output. This output is used to latch the low byte (and page byte for 24-bit data address space accesses) of the address to external memory during external code or data memory access cycles. It is activated every six oscillator periods except during an external data memory access. It can be disabled by setting the PCON.4 bit in the PCON SFR.

Pin No.	Mnemonic	Type*	Description
43–46	P0.0–P0.3 (AD0–AD3)	I/O	P0.0–P0.3, these pins are part of Port0 which is an 8-bit open-drain bidirectional I/O port. Port 0 pins that have 1s written to them float and in that state can be used as high impedance inputs. An external pull-up resistor will be required on P0 output outputs to force a valid logic high level externally. Port 0 is also the multiplexed low-order address and data bus during accesses to external program or data memory. In this application it uses strong internal pull-ups when emitting 1s.
49–52	P0.4–P0.7 (AD4–AD7)	I/O	P0.4–P0.7, these pins are part of Port0 which is an 8-bit open drain bidirectional I/O port. Port 0 pins that have 1s written to them float and in that state can be used as high impedance inputs. Port 0 is also the multiplexed low-order address and data bus during accesses to external program or data memory. In this application it uses strong internal pull-ups when emitting 1s.

*I = Input, O = Output, S = Supply.

NOTES

1. In the following descriptions, SET implies a Logic 1 state and CLEARED implies a Logic 0 state unless otherwise stated.
2. In the following descriptions, SET and CLEARED also imply that the bit is set or automatically cleared by the ADuC824 hardware unless otherwise stated.
3. User software should not write 1s to reserved or unimplemented bits as they may be used in future products.

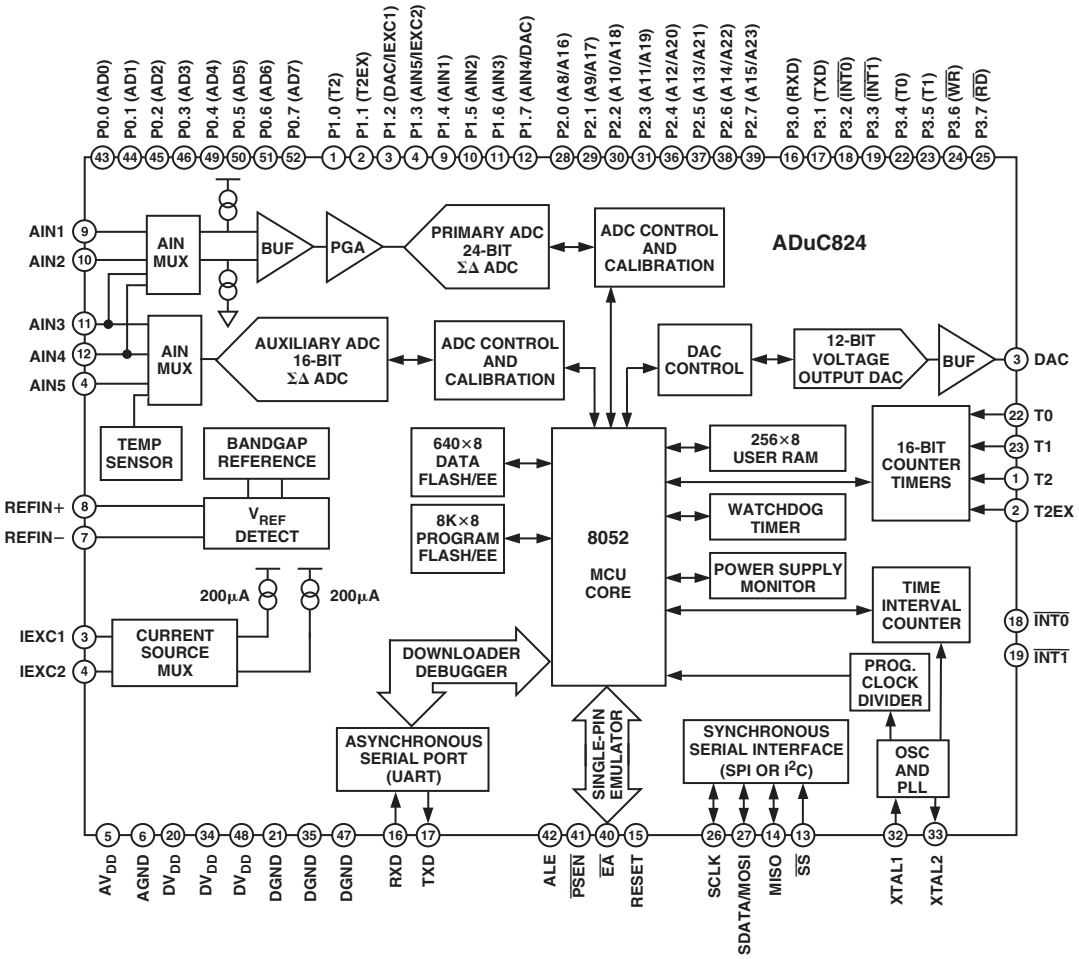

Figure 12. ADuC824 Block Diagram

MEMORY ORGANIZATION

As with all 8051-compatible devices, the ADuC824 has separate address spaces for Program and Data memory as shown in Figure 13 and Figure 14.

If the user applies power or resets the device while the $\overline{EA}$ pin is pulled low, the part will execute code from the external program space, otherwise the part defaults to code execution from its internal 8 Kbyte Flash/EE program memory. This internal code space can be downloaded via the UART serial port while the device is in-circuit.

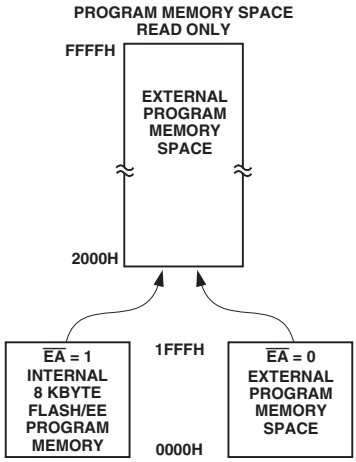

Figure 13. Program Memory Map

The data memory address space consists of internal and external memory space. The internal memory space is divided into four physically separate and distinct blocks, namely the lower 128 bytes of RAM, the upper 128 bytes of RAM, the 128 bytes of special function register (SFR) area, and a 640-byte Flash/EE Data memory. While the upper 128 bytes of RAM, and the SFR area share the same address locations, they are accessed through different address modes.

The lower 128 bytes of data memory can be accessed through direct or indirect addressing, the upper 128 bytes of RAM can be accessed through indirect addressing, and the SFR area is accessed through direct addressing.

Also, as shown in Figure 13, the additional 640 Bytes of Flash/EE Data Memory are available to the user and can be accessed indirectly via a group of control registers mapped into the Special Function Register (SFR) area. Access to the Flash/EE Data memory is discussed in detail later as part of the Flash/EE memory section in this data sheet.

The external data memory area can be expanded up to 16 MBytes. This is an enhancement of the 64 KByte external data memory space available on standard 8051-compatible cores.

The external data memory is discussed in more detail in the ADuC824 Hardware Design Considerations section.

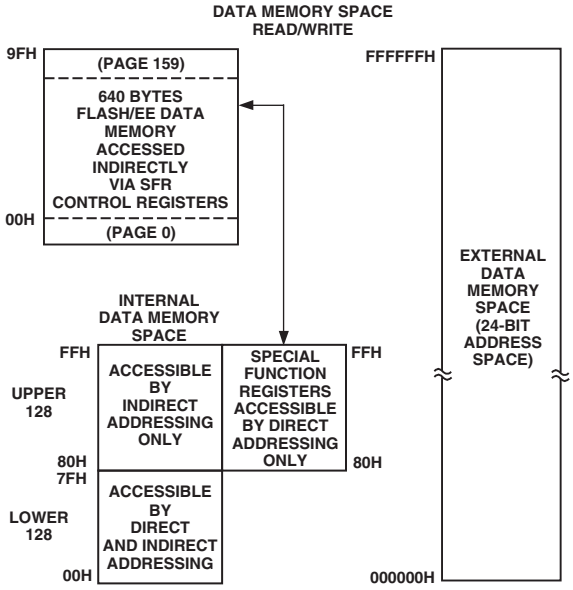

Figure 14. Data Memory Map

The lower 128 bytes of internal data memory are mapped as shown in Figure 15. The lowest 32 bytes are grouped into four banks of eight registers addressed as R0 through R7. The next 16 bytes (128 bits), locations 20Hex through 2FHex above the register banks, form a block of directly addressable bit locations at bit addresses 00H through 7FH. The stack can be located anywhere in the internal memory address space, and the stack depth can be expanded up to 256 bytes.

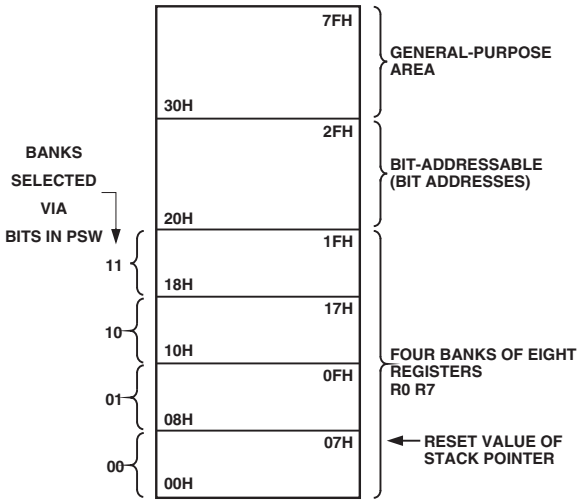

Figure 15. Lower 128 Bytes of Internal Data Memory

Reset initializes the stack pointer to location 07 hex and increments it once to start from locations 08 hex which is also the first register (R0) of register bank 1. Thus, if one is going to use more than one register bank, the stack pointer should be initialized to an area of RAM not used for data storage.

The SFR space is mapped to the upper 128 bytes of internal data memory space and accessed by direct addressing only. It provides an interface between the CPU and all on-chip peripherals. A block diagram showing the programming model of the ADuC824 via the SFR area is shown in Figure 16. A complete SFR map is shown in Figure 17.

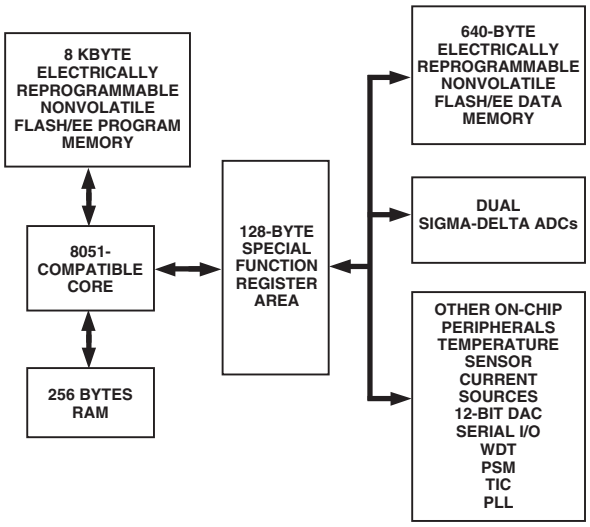

Figure 16. Programming Model

OVERVIEW OF MCU-RELATED SFRS

Accumulator SFR

ACC is the Accumulator register and is used for math operations including addition, subtraction, integer multiplication and division, and Boolean bit manipulations. The mnemonics for accumulator-specific instructions refer to the Accumulator as A.

B SFR

The B register is used with the ACC for multiplication and division operations. For other instructions it can be treated as a general-purpose scratchpad register.

Stack Pointer SFR

The SP register is the stack pointer and is used to hold an internal RAM address that is called the *'top of the stack.'* The SP register is incremented before data is stored during PUSH and CALL executions. While the Stack may reside anywhere in on-chip RAM, the SP register is initialized to 07H after a reset. This causes the stack to begin at location 08H.

Data Pointer

The Data Pointer is made up of three 8-bit registers, named DPP (page byte), DPH (high byte) and DPL (low byte). These are used to provide memory addresses for internal and external code access and external data access. It may be manipulated as a 16-bit register (DPTR = DPH, DPL), although INC DPTR instructions will automatically carry over to DPP, or as three independent 8-bit registers (DPP, DPH, DPL).

Program Status Word SFR

The PSW register is the Program Status Word which contains several bits reflecting the current status of the CPU as detailed in Table I.

SFR Address	D0H
Power ON Default Value	00H
Bit Addressable	Yes

CY	AC	F0	RS1	RS0	OV	F1	P

Table I. PSW SFR Bit Designations

Bit	Name	Description
7	CY	Carry Flag
6	AC	Auxiliary Carry Flag
5	F0	General-Purpose Flag
4	RS1	Register Bank Select Bits
3	RS0	RS1 RS0 Selected Bank 0 0 0 0 1 1 1 0 2 1 1 3
2	OV	Overflow Flag
1	F1	General-Purpose Flag
0	P	Parity Bit

Power Control SFR

The Power Control (PCON) register contains bits for power-saving options and general-purpose status flags as shown in Table II.

SFR Address	87H
Power ON Default Value	00H
Bit Addressable	No

SMOD	SERIPD	INT0PD	ALEOFF	GF1	GF0	PD	IDL

Table II. PCON SFR Bit Designations

Bit	Name	Description
7	SMOD	Double UART Baud Rate
6	SERIPD	I^2C/SPI Power-Down Interrupt Enable
5	INT0PD	$\overline{\text{INT0}}$ Power-Down Interrupt Enable
4	ALEOFF	Disable ALE Output
3	GF1	General-Purpose Flag Bit
2	GF0	General-Purpose Flag Bit
1	PD	Power-Down Mode Enable
0	IDL	Idle Mode Enable

SPECIAL FUNCTION REGISTERS

All registers except the program counter and the four general-purpose register banks, reside in the SFR area. The SFR registers include control, configuration, and data registers that provide an interface between the CPU and all on-chip peripherals.

Figure 17 shows a full SFR memory map and SFR contents on RESET; NOT USED indicates unoccupied SFR locations. Unoccupied locations in the SFR address space are not implemented; i.e., no register exists at this location. If an unoccupied location is read, an unspecified value is returned. SFR locations reserved for future use are shaded (RESERVED) and should not be accessed by user software.

ISPI FFH 0	WCOL FEH 0	SPE FDH 0	SPIM FCH 0	CPOL FBH 0	CPHA FAH 1	SPR1 F9H 0	SPR0 F8H 0	BITS
F7H 0	F6H 0	F5H 0	F4H 0	F3H 0	F2H 0	F1H 0	F0H 0	BITS
MDO EFH 0	MDE EEH 0	MCO EDH 0	MDI ECH 0	I2CM EBH 0	I2CRS EAH 0	I2CTX E9H 0	I2CI E8H 0	BITS
E7H 0	E6H 0	E5H 0	E4H 0	E3H 0	E2H 0	E1H 0	E0H 0	BITS
RDY0 DFH 0	RDY1 DEH 0	CAL DDH 0	NOXREF DCH 0	ERR0 DBH 0	ERR1 DAH 0	D9H 0	D8H 0	BITS
CY D7H 0	AC D6H 0	F0 D5H 0	RSI D4H 0	RS0 D3H 0	OV D2H 0	FI D1H 0	P D0H 0	BITS
TF2 CFH 0	EXF2 CEH 0	RCLK CDH 0	TCLK CCH 0	EXEN2 CBH 0	TR2 CAH 0	CNT2 C9H 0	CAP2 C8H 0	BITS
PRE3 C7H 0	PRE2 C6H 0	PRE1 C5H 0	PRE0 C4H 1	WDIR C3H 0	WDS C2H 0	WDE C1H 0	WDWR C0H 0	BITS
BFH 0	PADC BEH 0	PT2 BDH 0	PS BCH 0	PT1 BBH 0	PX1 BAH	PT0 B9H 0	PX0 B8H 0	BITS
$\overline{RD}$ B7H 1	$\overline{WR}$ B6H 1	T1 B5H 1	T0 B4H 1	$\overline{INT1}$ B3H 1	$\overline{INT0}$ B2H 1	TXD B1H 1	RXD B0H 1	BITS
EA AFH 0	EADC AEH 0	ET2 ADH 0	ES ACH 0	ET1 ABH 0	EX1 AAH 0	ET0 A9H 0	EX0 A8H 0	BITS
A7H 1	A6H 1	A5H 1	A4H 1	A3H 1	A2H 1	A1H 1	A0H 1	BITS
SM0 9FH 0	SM1 9EH 0	SM2 9DH 0	REN 9CH 0	TB8 9BH 0	RB8 9AH 0	T1 99H 0	R1 98H 0	BITS
97H 1	96H 1	95H 1	94H 1	93H 1	92H 1	T2EX 91H 1	T2 90H 1	BITS
TF1 8FH 0	TR1 8EH 0	TF0 8DH 0	TR0 8CH 0	IE1 8BH 0	IT1 8AH 0	IE0 89H 0	IT0 88H 0	BITS
87H 1	86H 1	85H 1	84H 1	83H 1	82H 1	81H 1	80H 1	BITS

SPICON F8H 04H	RESERVED	RESERVED	DACL FBH 00H	DACH FCH 00H	DACCON FDH 00H	RESERVED	RESERVED
B F0H 00H	RESERVED	RESERVED	NOT USED	RESERVED	RESERVED	RESERVED	SPIDAT F7H 00H
I2CCON E8H 00H	GN0L* E9H 55H	GN0M* EAH 55H	GN0H* EBH 53H	GN1L* ECH 9AH	GN1H* EDH 59H	RESERVED	RESERVED
ACC E0H 00H	OF0L* E1H 00H	OF0M* E2H 00H	OF0H* E3H 80H	OF1L* E4H 00H	OF1H* E5H 80H	RESERVED	RESERVED
ADCSTAT D8H 00H	ADC0L D9H 00H	ADC0M DAH 00H	ADC0H DBH 00H	ADC1L DCH 00H	ADC1H DDH 00H	RESERVED	PSMCON DFH DEH
PSW D0H 00H	ADCMODE D1H 00H	ADC0CON D2H 07H	ADC1CON D3H 00H	SF D4H 45H	ICON D5H 00H	RESERVED	PLLCON D7H 03H
T2CON C8H 00H	RESERVED	RCAP2L CAH 00H	RCAP2H CBH 00H	TL2 CCH 00H	TH2 CDH 00H	RESERVED	RESERVED
WDCON C0H 10H	RESERVED	CHIPID C2H 06H	RESERVED	RESERVED	RESERVED	EADRL C6H 00H	RESERVED
IP B8H 00H	ECON B9H 00H	RESERVED	RESERVED	EDATA1 BCH 00H	EDATA2 BDH 00H	EDATA3 BEH 00H	EDATA4 BFH 00H
P3 B0H FFH	NOT USED	NOT USED	NOT USED	NOT USED	RESERVED	RESERVED	NOT USED
IE A8H 00H	IEIP2 A9H A0H	RESERVED	RESERVED	RESERVED	RESERVED	RESERVED	RESERVED
P2 A0H FFH	TIMECON A1H 00H	HTHSEC A2H 00H	SEC A3H 00H	MIN A4H 00H	HOUR A5H 00H	INTVAL A6H 00H	NOT USED
SCON 98H 00H	SBUF 99H 00H	I2CDAT 9AH 00H	I2CDAT 9AH 00H	NOT USED	NOT USED	NOT USED	NOT USED
P1 90H FFH	NOT USED	NOT USED	NOT USED	NOT USED	NOT USED	NOT USED	NOT USED
TCON 88H 00H	TMOD 89H 00H	TL0 8AH 00H	TL1 8BH 00H	TH0 8CH 00H	TH1 8DH 00H	RESERVED	RESERVED
P0 80H FFH	SP 81H 07H	DPL 82H 00H	DPH 83H 00H	DPP 84H 00H	RESERVED	RESERVED	PCON 87H 00H

*CALIBRATION COEFFICIENTS ARE PRECONFIGURED AT POWER-UP TO FACTORY CALIBRATED VALUES.

SFR MAP KEY:

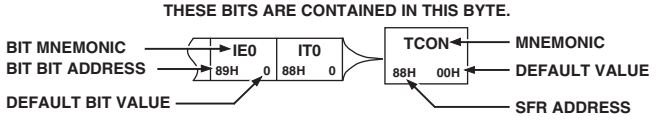

SFR NOTE:
SFRs WHOSE ADDRESSES END IN 0H OR 8H ARE BIT-ADDRESSABLE.

Figure 17. Special Function Register Locations and Reset Values

SFR INTERFACE TO THE PRIMARY AND AUXILIARY ADCS

Both ADCs are controlled and configured via a number of SFRs that are mentioned here and described in more detail in the following pages.

ADCSTAT: ADC Status Register. Holds general status of the Primary and Auxiliary ADCs.

ADCMODE: ADC Mode Register. Controls general modes of operation for Primary and Auxiliary ADCs.

ADC0CON: Primary ADC Control Register. Controls specific configuration of Primary ADC.

ADC1CON: Auxiliary ADC Control Register. Controls specific configuration of Auxiliary ADC.

SF: Sinc Filter Register. Configures the decimation factor for the Sinc3 filter and thus the Primary and Auxiliary ADC update rates.

ICON: Current Source Control Register. Allows user control of the various on-chip current source options.

ADC0L/M/H: Primary ADC 24-bit conversion result held in these three 8-bit registers.

ADC1L/H: Auxiliary ADC 16-bit conversion result held in these two 8-bit registers.

OF0L/M/H: Primary ADC 24-bit Offset Calibration Coefficient held in these three 8-bit registers.

OF1L/H: Auxiliary ADC 16-bit Offset Calibration Coefficient held in these two 8-bit registers.

GN0L/M/H: Primary ADC 24-bit Gain Calibration Coefficient held in these three 8-bit registers.

GN1L/H: Auxiliary ADC 16-bit Gain Calibration Coefficient held in these two 8-bit registers.

ADCSTAT—(ADC Status Register)

This SFR reflects the status of both ADCs including data ready, calibration and various (ADC-related) error and warning conditions including reference detect and conversion overflow/underflow flags.

SFR Address	D8H
Power-On Default Value	00H
Bit Addressable	Yes

RDY0	**RDY1**	**CAL**	**NOXREF**	**ERR0**	**ERR1**	**---**	**---**

Table III. ADCSTAT SFR Bit Designations

Bit	Name	Description
7	RDY0	Ready Bit for Primary ADC. *Set* by hardware on completion of ADC conversion or calibration cycle. *Cleared* directly by the user or indirectly by write to the mode bits to start another Primary ADC conversion or calibration. The Primary ADC is inhibited from writing further results to its data or calibration registers until the RDY0 bit is cleared.
6	RDY1	Ready Bit for Auxiliary ADC. Same definition as RDY0 referred to the Auxiliary ADC.
5	CAL	Calibration Status Bit. *Set* by hardware on completion of calibration. *Cleared* indirectly by a write to the mode bits to start another ADC conversion or calibration.
4	NOXREF	No External Reference Bit *(only active if Primary or Auxiliary ADC is active)*. *Set* to indicate that one or both of the REFIN pins is floating or the applied voltage is below a specified threshold. When Set conversion results are clamped to all ones,if using ext. reference. *Cleared* to indicate valid V_{REF}.
3	ERR0	Primary ADC Error Bit. *Set* by hardware to indicate that the result written to the Primary ADC data registers has been clamped to all zeros or all ones. After a calibration this bit also flags error conditions that caused the calibration registers not to be written. *Cleared* by a write to the mode bits to initiate a conversion or calibration.
2	ERR1	Auxiliary ADC Error Bit. Same definition as ERR0 referred to the Auxiliary ADC.
1	---	Reserved for Future use.
0	---	Reserved for Future use.

ADCMODE (ADC Mode Register)

Used to control the operational mode of both ADCs.

SFR Address	D1H
Power-On Default Value	00H
Bit Addressable	No

---	---	ADC0EN	ADC1EN	---	MD2	MD1	MD0

Table IV. ADCMODE SFR Bit Designations

Bit	Name	Description
7	---	Reserved for Future Use.
6	---	Reserved for Future Use.
5	ADC0EN	Primary ADC Enable. *Set* by the user to enable the Primary ADC and place it in the mode selected in MD2-MD0 below *Cleared* by the user to place the Primary ADC in power-down mode.
4	ADC1EN	Auxiliary ADC Enable. *Set* by the user to enable the Auxiliary ADC and place it in the mode selected in MD2-MD0 below *Cleared* by the user to place the Auxiliary ADC in power-down mode.
3	---	Reserved for Future Use.
2	MD2	Primary and Auxiliary ADC Mode bits.
1	MD1	These bits select the operational mode of the enabled ADC as follows:
0	MD0	MD2 MD1 MD0
		0 0 0 Power-Down Mode (Power-On Default)
		0 0 1 Idle Mode In Idle Mode the ADC filter and modulator are held in a reset state although the modulator clocks are still provided.
		0 1 0 Single Conversion Mode In Single Conversion Mode, a single conversion is performed on the enabled ADC. On completion of the conversion, the ADC data registers (ADC0H/M/L and/or ADC1H/L) are updated, the relevant flags in the ADCSTAT SFR are written, and power-down is re-entered with the MD2–MD0 accordingly being written to 000.
		0 1 1 Continuous Conversion In continuous conversion mode the ADC data registers are regularly updated at the selected update rate (see SF register)
		1 0 0 Internal Zero-Scale Calibration Internal short automatically connected to the enabled ADC(s)
		1 0 1 Internal Full-Scale Calibration Internal or External V_{REF} (as determined by XREF0 and XREF1 bits in ADC0/1CON) is automatically connected to the ADC input for this calibration.
		1 1 0 System Zero-Scale Calibration User should connect system zero-scale input to the ADC input pins as selected by CH1/CH0 and ACH1/ACH0 bits in the ADC0/1CON register.
		1 1 1 System Full-Scale Calibration User should connect system full-scale input to the ADC input pins as selected by CH1/CH0 and ACH1/ACH0 bits in the ADC0/1CON register.

NOTES

1. Any change to the MD bits will immediately reset both ADCs. A write to the MD2–0 bits with no change is also treated as a reset. (See exception to this in Note 3 below.)
2. If ADC0CON is written when AD0EN = 1, or if AD0EN is changed from 0 to 1, then both ADCs are also immediately reset. In other words, the Primary ADC is given priority over the Auxiliary ADC and any change requested on the primary ADC is immediately responded to.
3. On the other hand, if ADC1CON is written or if ADC1EN is changed from 0 to 1, only the Auxiliary ADC is reset. For example, if the Primary ADC is continuously converting when the Auxiliary ADC change or enable occurs, the primary ADC continues undisturbed. Rather than allow the Auxiliary ADC to operate with a phase difference from the primary ADC, the Auxiliary ADC will fall into step with the outputs of the primary ADC. The result is that the first conversion time for the Auxiliary ADC will be delayed up to three outputs while the Auxiliary ADC update rate is synchronized to the Primary ADC.
4. Once ADCMODE has been written with a calibration mode, the RDY0/1 bits (ADCSTAT) are immediately reset and the calibration commences. On completion, the appropriate calibration registers are written, the relevant bits in ADCSTAT are written, and the MD2–0 bits are reset to 000 to indicate the ADC is back in power-down mode.
5. Any calibration request of the Auxiliary ADC while the temperature sensor is selected will fail to complete. Although the RDY1 bit will be set at the end of the calibration cycle, no update of the calibration SFRs will take place and the ERR1 bit will be set.
6. Calibrations are performed at maximum SF (see SF SFR) value guaranteeing optimum calibration operation.

ADC0CON (Primary ADC Control Register)

Used to configure the Primary ADC for range, channel selection, external Ref enable, and unipolar or bipolar coding.

SFR Address	D2H
Power-On Default Value	07H
Bit Addressable	No

---	XREF0	CH1	CH0	UNI0	RN2	RN1	RN0

Table V. ADC0CON SFR Bit Designations

Bit	Name	Description
7	---	Reserved for Future Use.
6	XREF0	Primary ADC External Reference Select Bit. *Set* by user to enable the Primary ADC to use the external reference via REFIN(+)/REFIN(–). *Cleared* by user to enable the Primary ADC to use the internal bandgap reference (V_{REF} = 1.25 V).
5	CH1	Primary ADC Channel Selection Bits.
4	CH0	Written by the user to select the differential input pairs used by the Primary ADC as follows: CH1 CH0 Positive Input Negative Input 0 0 AIN1 AIN2 0 1 AIN3 AIN4 1 0 AIN2 AIN2 (Internal Short) 1 1 AIN3 AIN2
3	UNI0	Primary ADC Unipolar Bit. *Set* by user to enable unipolar coding, i.e., zero differential input will result in 000000 hex output. *Cleared* by user to enable bipolar coding, zero differential input will result in 800000 hex output.
2	RN2	Primary ADC Range Bits.
1	RN1	Written by the user to select the Primary ADC input range as follows:
0	RN0	RN2 RN1 RN0 Selected Primary ADC Input Range (V_{REF} = 2.5 V) 0 0 0 ±20 mV 0 0 1 ±40 mV 0 1 0 ±80 mV 0 1 1 ±160 mV 1 0 0 ±320 mV 1 0 1 ±640 mV 1 1 0 ±1.28 V 1 1 1 ±2.56 V

ADC1CON (Auxiliary ADC Control Register)

Used to configure the Auxiliary ADC for channel selection, external Ref enable and unipolar or bipolar coding. It should be noted that the Auxiliary ADC only operates on a fixed input range of $\pm V_{REF}$.

SFR Address	D3H
Power-On Default Value	00H
Bit Addressable	No

---	XREF1	ACH1	ACH0	UNI1	---	---	---

Table VI. ADC1CON SFR Bit Designations

Bit	Name	Description
7	---	Reserved for Future Use.
6	XREF1	Auxiliary ADC External Reference Bit. *Set* by user to enable the Auxiliary ADC to use the external reference via REFIN(+)/REFIN(–). *Cleared* by user to enable the Auxiliary ADC to use the internal bandgap reference.
5	ACH1	Auxiliary ADC Channel Selection Bits.
4	ACH0	Written by the user to select the single-ended input pins used to drive the Auxiliary ADC as follows: ACH1 ACH0 Positive Input Negative Input 0 0 AIN3 AGND 0 1 AIN4 AGND 1 0 Temp Sensor* AGND (Temp. Sensor routed to the ADC input) 1 1 AIN5 AGND
3	UNI1	Auxiliary ADC Unipolar Bit. *Set* by user to enable unipolar coding, i.e., zero input will result in 0000 hex output. *Cleared* by user to enable bipolar coding, zero input will result in 8000 hex output.
2	---	Reserved for Future Use.
1	---	Reserved for Future Use.
0	---	Reserved for Future Use.

*NOTES
1. When the temperature sensor is selected, user code must select internal reference via XREF1 bit above and clear the UNI1 bit (ADC1CON.3) to select bipolar coding.
2. The temperature sensor is factory calibrated to yield conversion results 8000H at 0°C.
3. A +1°C change in temperature will result in a +1 LSB change in the ADC1H register ADC conversion result.

SF (Sinc Filter Register)

The number in this register sets the decimation factor and thus the output update rate for the Primary and Auxiliary ADCs. This SFR cannot be written by user software while either ADC is active. The update rate applies to both Primary and Auxiliary ADCs and is calculated as follows:

$$f_{ADC} = \frac{1}{3} \cdot \frac{1}{8.SF} \cdot f_{MOD}$$

Where: f_{ADC} = ADC Output Update Rate
f_{MOD} = Modulator Clock Frequency = 32.768 kHz
SF = Decimal Value of SF Register

The allowable range for SF is 0Dhex to FFhex. Examples of SF values and corresponding conversion update rate (f_{ADC}) and conversion time (t_{ADC}) are shown in Table VII, the power-on default value for the SF register is 45 hex, resulting in a default ADC update rate of just under 20 Hz. Both ADC inputs are chopped to minimize offset errors, which means that the settling time for a single conversion or the time to a first conversion result in continuous conversion mode is $2 \times t_{ADC}$. As mentioned earlier, all calibration cycles will be carried out automatically with a maximum, i.e., FFhex, SF value to ensure optimum calibration performance. Once a calibration cycle has completed, the value in the SF register will be that programmed by user software.

Table VII. SF SFR Bit Designations

SF(dec)	SF(hex)	f_{ADC}(Hz)	t_{ADC}(ms)
13	0D	105.3	9.52
69	45	19.79	50.34
255	FF	5.35	186.77

ICON (Current Sources Control Register)
Used to control and configure the various excitation and burnout current source options available on-chip.

SFR Address	D5H
Power-On Default Value	00H
Bit Addressable	No

---	BO	ADC1IC	ADC0IC	I2PIN	I1PIN	I2EN	I1EN

Table VIII. ICON SFR Bit Designations

Bit	Name	Description
7	---	Reserved for Future Use.
6	BO	Burnout Current Enable Bit. *Set* by user to enable both transducer burnout current sources in the primary ADC signal paths. *Cleared* by user to disable both transducer burnout current sources.
5	ADC1IC	Auxiliary ADC Current Correction Bit. *Set* by user to allow scaling of the Auxiliary ADC by an internal current source calibration word.
4	ADC0IC	Primary ADC Current Correction Bit. *Set* by user to allow scaling of the Primary ADC by an internal current source calibration word.
3	I2PIN[1]	Current Source-2 Pin Select Bit. *Set* by user to enable current source-2 (200 µA) to external pin 3 (P1.2/DAC/IEXC1). *Cleared* by user to enable current source-2 (200 µA) to external pin 4 (P1.3/AIN5/IEXC2).
2	I1PIN[1]	Current Source-1 Pin Select Bit. *Set* by user to enable current source-1 (200 µA) to external pin 4 (P1.3/AIN5/IEXC2). *Cleared* by user to enable current source-1 (200 µA) to external pin 3 (P1.2/DAC/IEXC1).
1	I2EN	Current Source-2 Enable Bit. *Set* by user to turn on excitation current source-2 (200 µA). *Cleared* by user to turn off excitation current source-2 (200 µA).
0	I1EN	Current Source-1 Enable Bit. *Set* by user to turn on excitation current source-1 (200 µA). *Cleared* by user to turn off excitation current source-1 (200 µA).

NOTE
[1]Both current sources can be enabled to the same external pin, yielding a 400 µA current source.

ADC0H/ADC0M/ADC0L (Primary ADC Conversion Result Registers)
These three 8-bit registers hold the 24-bit conversion result from the Primary ADC.

SFR Address	ADC0H	High Data Byte	DBH
	ADC0M	Middle Data Byte	DAH
	ADC0L	Low Data Byte	D9H
Power-On Default Value	00H	All Three registers	
Bit Addressable	No	All Three registers	

ADC1H/ADC1L (Auxiliary ADC Conversion Result Registers)
These two 8-bit registers hold the 16-bit conversion result from the Auxiliary ADC.

SFR Address	ADC1H	High Data Byte	DDH
	ADC1L	Low Data Byte	DCH
Power-On Default Value	00H	Both Registers	
Bit Addressable	No	Both Registers	

OF0H/OF0M/OF0L (Primary ADC Offset Calibration Registers[1])

These three 8-bit registers hold the 24-bit offset calibration coefficient for the Primary ADC. These registers are configured at power-on with a factory default value of 800000Hex. However, these bytes will be automatically overwritten if an internal or system zero-scale calibration is initiated by the user via MD2–0 bits in the ADCMODE register.

SFR Address	OF0H	Primary ADC Offset Coefficient High Byte	E3H
	OF0M	Primary ADC Offset Coefficient Middle Byte	E2H
	OF0L	Primary ADC Offset Coefficient Low Byte	E1H
Power-On Default Value	800000H	OF0H, OF0M, and OF0L, Respectively	
Bit Addressable	No	All Three Registers	

OF1H/OF1L (Auxiliary ADC Offset Calibration Registers[1])

These two 8-bit registers hold the 16-bit offset calibration coefficient for the Auxiliary ADC. These registers are configured at power-on with a factory default value of 8000Hex. However, these bytes will be automatically overwritten if an internal or system zero-scale calibration is initiated by the user via the MD2–0 bits in the ADCMODE register.

SFR Address	OF1H	Auxiliary ADC Offset Coefficient High Byte	E5H
	OF1L	Auxiliary ADC Offset Coefficient Low Byte	E4H
Power-On Default Value	8000H	OF1H and OF1L Respectively	
Bit Addressable	No	Both Registers	

GN0H/GN0M/GN0L (Primary ADC Gain Calibration Registers[1])

These three 8-bit registers hold the 24-bit gain calibration coefficient for the Primary ADC. These registers are configured at power-on with a factory-calculated internal full-scale calibration coefficient. Every device will have an individual coefficient. However, these bytes will be automatically overwritten if an internal or system full-scale calibration is initiated by the user via MD2–0 bits in the ADCMODE register.

SFR Address	GN0H	Primary ADC Gain Coefficient High Byte	EBH
	GN0M	Primary ADC Gain Coefficient Middle Byte	EAH
	GN0L	Primary ADC Gain Coefficient Low Byte	E9H
Power-On Default Value		Configured at factory final test, see notes above.	
Bit Addressable	No	All Three Registers	

GN1H/GN1L (Auxiliary ADC Gain Calibration Registers[1])

These two 8-bit registers hold the 16-bit gain calibration coefficient for the Auxiliary ADC. These registers are configured at power-on with a factory calculated internal full-scale calibration coefficient. Every device will have an individual coefficient. However, these bytes will be automatically overwritten if an internal or system full-scale calibration is initiated by the user via MD2–0 bits in the ADCMODE register.

SFR Address	GN1H	Auxiliary ADC Gain Coefficient High Byte	EDH
	GN1L	Auxiliary ADC Gain Coefficient Low Byte	ECH
Power-On Default Value		Configured at factory final test, see notes above.	
Bit Addressable	No	Both Registers	

NOTE

[1]These registers can be overwritten by user software only if Mode bits MD0–2 (ADCMODE SFR) are zero.

PRIMARY AND AUXILIARY ADC CIRCUIT DESCRIPTION

Overview

The ADuC824 incorporates two independent sigma-delta ADCs (Primary and Auxiliary) with on-chip digital filtering intended for the measurement of wide dynamic range, low frequency signals such as those in weigh-scale, strain-gauge, pressure transducer or temperature measurement applications.

Primary ADC

This ADC is intended to convert the primary sensor input. The input is buffered and can be programmed for one of 8 input ranges from ±20 mV to ±2.56 V being driven from one of three differential input channel options AIN1/2, AIN3/4, or AIN3/2. The input channel is internally buffered allowing the part to handle significant source impedances on the analog input, allowing R/C filtering (for noise rejection or RFI reduction) to be placed on the analog inputs if required. On-chip burnout currents can also be turned on. These currents can be used to check that a transducer on the selected channel is still operational before attempting to take measurements.

The ADC employs a sigma-delta conversion technique to realize up to 24 bits of no missing codes performance. The sigma-delta modulator converts the sampled input signal into a digital pulse train whose duty cycle contains the digital information. A Sinc3 programmable low-pass filter is then employed to decimate the modulator output data stream to give a valid data conversion result at programmable output rates from 5.35 Hz (186.77 ms) to 105.03 Hz (9.52 ms). A Chopping scheme is also employed to minimize ADC offset errors. A block diagram of the Primary ADC is shown in Figure 18.

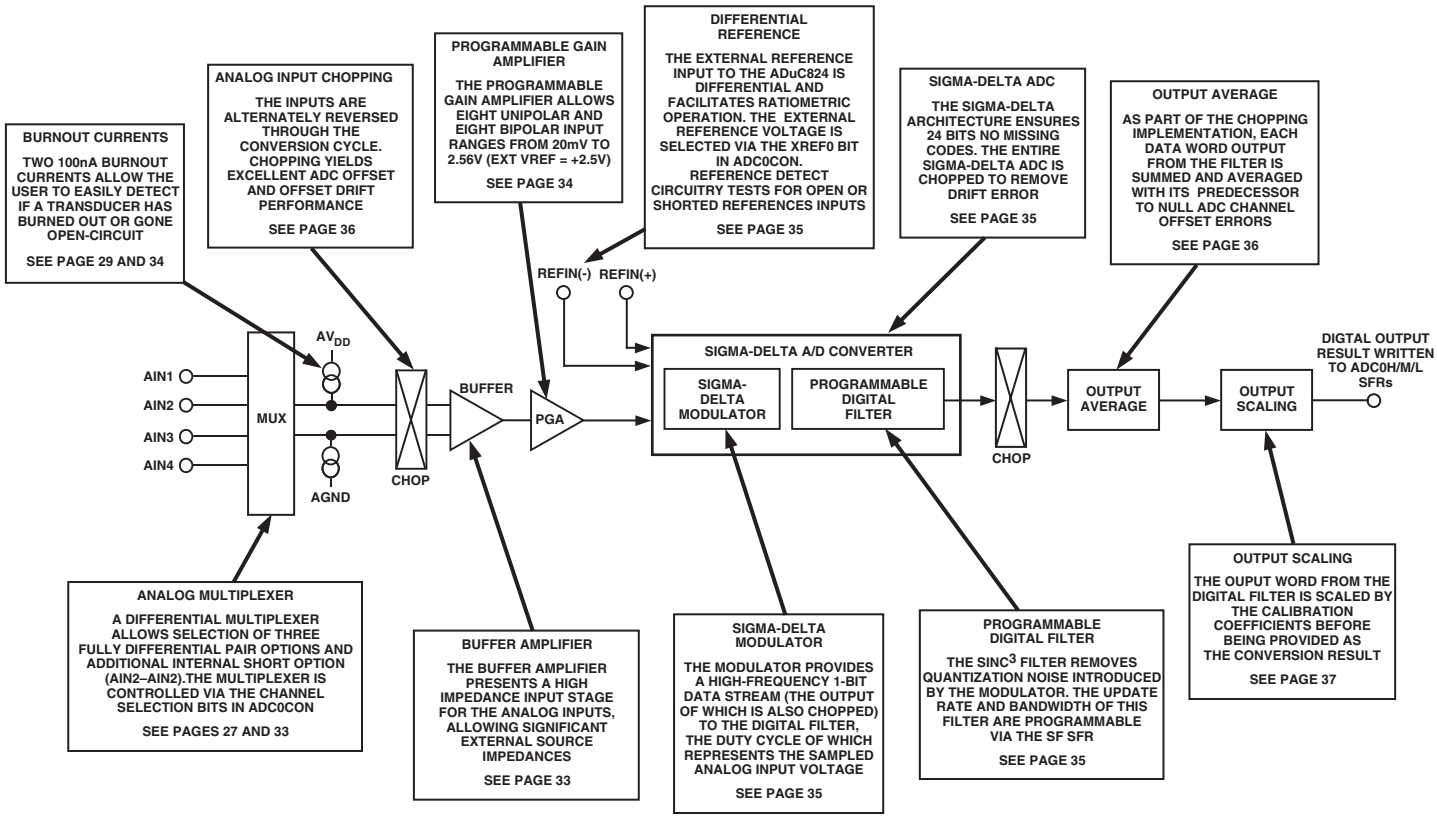

Figure 18. Primary ADC Block Diagram

Auxiliary ADC

The Auxiliary ADC is intended to convert supplementary inputs such as those from a cold junction diode or thermistor. This ADC is not buffered and has a fixed input range of 0 V to 2.5 V (assuming an external 2.5 V reference). The single-ended inputs can be driven from AIN3, AIN4 or AIN5 pins or directly from the on-chip temperature sensor voltage. A block diagram of the Auxiliary ADC is shown in Figure 19.

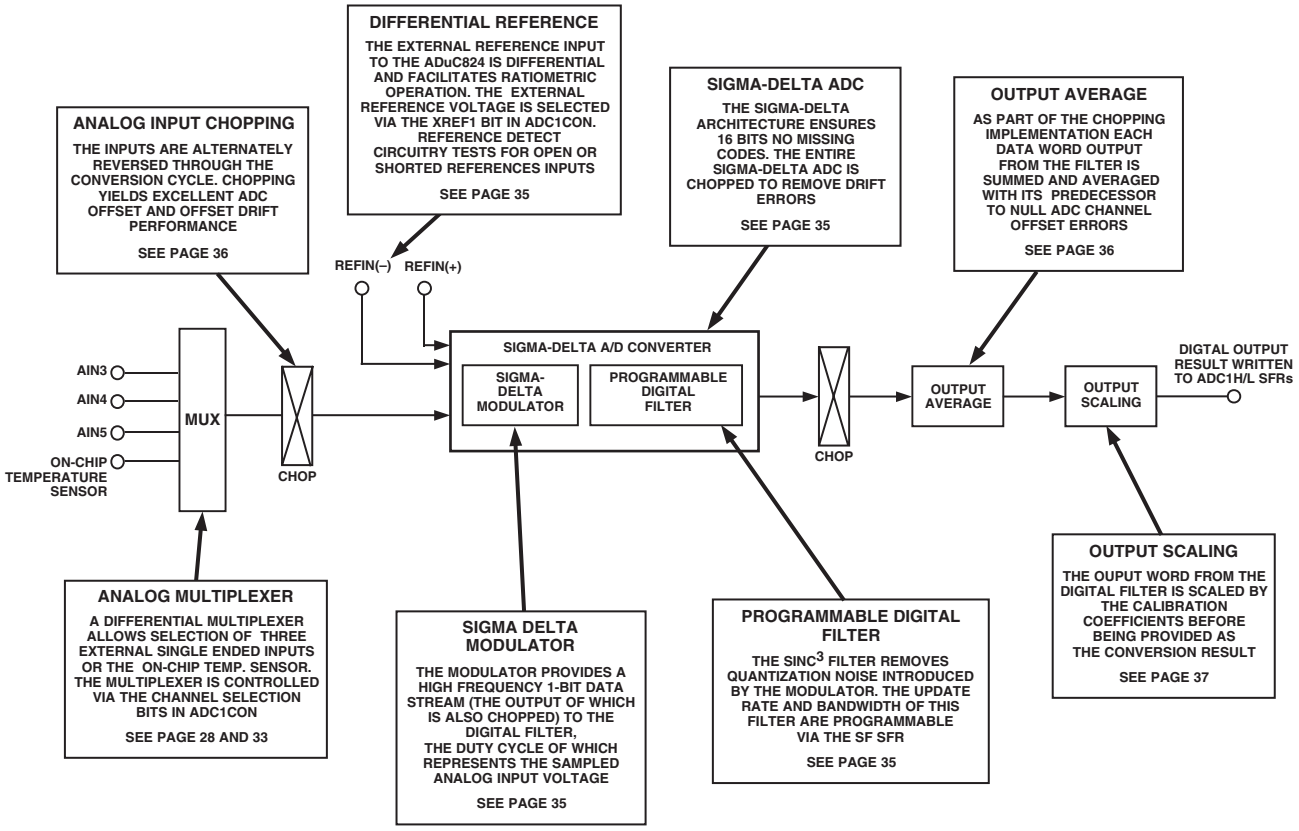

Figure 19. Auxiliary ADC Block Diagram

PRIMARY AND AUXILIARY ADC NOISE PERFORMANCE

Tables IX, X and XI below show the output rms noise in µV and output peak-to-peak resolution in bits (rounded to the nearest 0.5 LSB) for some typical output update rates on both the Primary and Auxiliary ADCs. The numbers are typical and are generated at a differential input voltage of 0 V. The output update rate is selected via the SF7–SF0 bits in the Sinc Filter (SF) SFR. It is important to note that the peak-to-peak resolution figures represent the resolution for which there will be no code flicker within a six-sigma limit.

Table IX. Primary ADC, Typical Output RMS Noise (µV)

Typical Output RMS Noise vs. Input Range and Update Rate; Output RMS Noise in µV

SF Word	Data Update Rate (Hz)	Input Range ±20 mV	±40 mV	±80 mV	±160 mV	±320 mV	±640 mV	±1.28 V	±2.56 V
13	105.3	1.50	1.50	1.60	1.75	3.50	4.50	6.70	11.75
69	19.79	0.60	0.65	0.65	0.65	0.65	0.95	1.40	2.30
255	5.35	0.35	0.35	0.37	0.37	0.37	0.51	0.82	1.25

Table X. Primary ADC, Peak-to-Peak Resolution (Bits)

Peak-to-Peak Resolution vs. Input Range and Update Rate; Peak-to-Peak Resolution in Bits

SF Word	Data Update Rate (Hz)	Input Range ±20 mV	±40 mV	±80 mV	±160 mV	±320 mV	±640 mV	±1.28 V	±2.56 V
13	105.3	12	13	14	15	15	15.5	16	16
69	19.79	13	14	15	16	17	17.5	18	18.5
255	5.35	14	15	16	17	18	18.5	18.8	19.2

Table XI. Auxiliary ADC

Typical Output RMS Noise vs. Update Rate[1]
Output RMS Noise in µV

SF Word	Data Update Rate (Hz)	Input Range 2.5 V
13	105.3	10.75
69	19.79	2.00
255	5.35	1.15

NOTE
[1]ADC converting in bipolar mode.

Peak-to-Peak Resolution vs. Update Rate[1]
Peak-to-Peak Resolution in Bits

SF Word	Data Update Rate (Hz)	Input Range 2.5 V
13	105.3	16[2]
69	19.79	16
255	5.35	16

NOTES
[1]ADC converting in bipolar mode.
[2]In unipolar mode peak-to-peak resolution at 105 Hz is 15 bits.

Analog Input Channels

The primary ADC has four associated analog input pins (labelled AIN1 to AIN4) which can be configured as two fully differential input channels. Channel selection bits in the ADC0CON SFR detailed in Table V allow three combinations of differential pair selection as well as an additional shorted input option (AIN2–AIN2).

The auxiliary ADC has three external input pins (labelled AIN3 to AIN5) as well as an internal connection to the internal on-chip temperature sensor. All inputs to the auxiliary ADC are single-ended inputs referenced to the AGND on the part. Channel selection bits in the ADC1CON SFR detailed previously in Table VI allow selection of one of four inputs.

Two input multiplexers switch the selected input channel to the on-chip buffer amplifier in the case of the primary ADC and directly to the sigma-delta modulator input in the case of the auxiliary ADC. When the analog input channel is switched, the settling time of the part must elapse before a new valid word is available from the ADC.

Primary and Auxiliary ADC Inputs

The output of the primary ADC multiplexer feeds into a high impedance input stage of the buffer amplifier. As a result, the primary ADC inputs can handle significant source impedances and are tailored for direct connection to external resistive-type sensors like strain gauges or Resistance Temperature Detectors (RTDs).

The auxiliary ADC, however, is unbuffered resulting in higher analog input current on the auxiliary ADC. It should be noted that this unbuffered input path provides a dynamic load to the driving source. Therefore, resistor/capacitor combinations on the input pins can cause dc gain errors depending on the output impedance of the source that is driving the ADC inputs.

Analog Input Ranges

The absolute input voltage range on the primary ADC is restricted to between AGND + 100 mV to AVDD – 100 mV. Care must be taken in setting up the common-mode voltage and input voltage range so that these limits are not exceeded, otherwise there will be a degradation in linearity performance.

The absolute input voltage range on the auxiliary ADC is restricted to between AGND – 30 mV to AVDD + 30 mV. The slightly negative absolute input voltage limit does allow the possibility of monitoring small signal bipolar signals using the single-ended auxiliary ADC front end.

Programmable Gain Amplifier

The output from the buffer on the primary ADC is applied to the input of the on-chip programmable gain amplifier (PGA). The PGA can be programmed through eight different unipolar input ranges and bipolar ranges. The PGA gain range is programmed via the range bits in the ADC0CON SFR. With the external reference select bit set in the ADC0CON SFR and an external 2.5 V reference, the unipolar ranges are 0 mV to +20 mV, 0 mV to 40 mV, 0 mV to 80 mV, 0 mV to 160 mV, 0 mV to 320 mV, 0 mV to 640 mV and 0 V to 1.28 V and 0 to 2.56 V while the bipolar ranges are ±20 mV, ±40 mV, ±80 mV, ±160 mV, ±320 mV, ±640 mV, ±1.28 V and ±2.56 V. These are the nominal ranges that should appear at the input to the on-chip PGA. An ADC range matching specification of 2 µV (typ) across all ranges means that calibration need only be carried out at a single gain range and does not have to be repeated when the PGA gain range is changed.

Typical matching across ranges is shown in Figure 20 below. Here, the primary ADC is configured in bipolar mode with an external 2.5 V reference, while just greater than 19 mV is forced on its inputs. The ADC continuously converts the DC input voltage at an update rate of 5.35 Hz, i.e., SF = FFhex. In total, 800 conversion results are gathered. The first 100 results are gathered with the primary ADC operating in the ±20 mV range. The ADC range is then switched to ±40 mV and 100 more conversion results are gathered, and so on until the last group of 100 samples are gathered with the ADC configured in the ±2.56 V range. From Figure 20, The variation in the sample mean through each range, i.e., the range matching, is seen to be of the order of 2 µV.

The auxiliary ADC does not incorporate a PGA and is configured for a fixed single input range of 0 to V_{REF}.

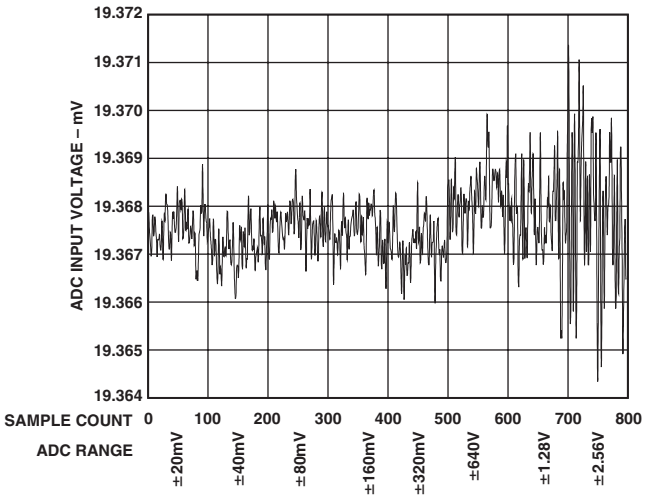

Figure 20. Primary ADC Range Matching

Bipolar/Unipolar Inputs

The analog inputs on the ADuC824 can accept either unipolar or bipolar input voltage ranges. Bipolar input ranges do not imply that the part can handle negative voltages with respect to system AGND.

Unipolar and bipolar signals on the AIN(+) input on the primary ADC are referenced to the voltage on the respective AIN(–) input. For example, if AIN(–) is 2.5 V and the primary ADC is configured for an analog input range of 0 mV to +20 mV, the input voltage range on the AIN(+) input is 2.5 V to 2.52 V. If AIN(–) is 2.5 V and the ADuC824 is configured for an analog input range of 1.28 V, the analog input range on the AIN(+) input is 1.22 V to 3.78 V (i.e., 2.5 V ± 1.28 V).

As mentioned earlier, the auxiliary ADC input is a single-ended input with respect to the system AGND. In this context a bipolar signal on the auxiliary ADC can only span 30 mV negative with respect to AGND before violating the voltage input limits for this ADC.

Bipolar or unipolar options are chosen by programming the Primary and Auxiliary Unipolar enable bits in the ADC0CON and ADC1CON SFRs respectively. This programs the relevant ADC for either unipolar or bipolar operation. Programming for either unipolar or bipolar operation does not change any of the input signal conditioning; it simply changes the data output coding and the points on the transfer function where calibrations occur. When an ADC is configured for unipolar operation, the output coding is natural (straight) binary with a zero differential input voltage resulting in a code of 000 . . . 000, a midscale voltage resulting in a code of 100 . . . 000, and a full-scale input voltage resulting in a code of 111 . . . 111. When an ADC is configured for bipolar operation, the coding is offset binary with a negative full-scale voltage resulting in a code of 000 . . . 000, a zero differential voltage resulting in a code of 100 . . . 000, and a positive full-scale voltage resulting in a code of 111 . . . 111.

Burnout Currents

The primary ADC on the ADuC824 contains two 100 nA constant current generators, one sourcing current from AVDD to AIN(+), and one sinking from AIN(–) to AGND. The currents are switched to the selected analog input pair. Both currents are either on or off, depending on the Burnout Current Enable (BO) bit in the ICON SFR (see Table VIII). These currents can be used to verify that an external transducer is still operational before attempting to take measurements on that channel. Once the burnout currents are turned on, they will flow in the external transducer circuit, and a measurement of the input voltage on the analog input channel can be taken. If the resultant voltage measured is full-scale, this indicates that the transducer has gone open-circuit. If the voltage measured is 0 V, it indicates that the transducer has short circuited. For normal operation, these burnout currents are turned off by writing a 0 to the BO bit in the ICON SFR. The current sources work over the normal absolute input voltage range specifications.

Excitation Currents

The ADuC824 also contains two identical, 200 µA constant current sources. Both source current from AVDD to Pin #3 (IEXC1) or Pin #4 (IEXC2) These current sources are controlled via bits in the ICON SFR shown in Table VIII. They can be configured to source 200 µA individually to both pins or a combination of both currents, i.e., 400 µA to either of the selected pins. These current sources can be used to excite external resistive bridge or RTD sensors.

Reference Input

The ADuC824's reference inputs, REFIN(+) and REFIN(–), provide a differential reference input capability. The common-mode range for these differential inputs is from AGND to AVDD. The nominal reference voltage, VREF (REFIN(+) – REFIN(–)), for specified operation is 2.5 V with the primary and auxiliary reference enable bits set in the respective ADC0CON and/or ADC1CON SFRs.

The part is also functional (although not specified for performance) when the XREF0 or XREF1 bits are '0,' which enables the on-chip internal bandgap reference. In this mode, the ADCs will see the internal reference of 1.25 V, therefore halving all input ranges. As a result of using the internal reference voltage, a noticeable degradation in peak-to-peak resolution will result. Therefore, for best performance, operation with an external reference is strongly recommended.

In applications where the excitation (voltage or current) for the transducer on the analog input also drives the reference voltage for the part, the effect of the low-frequency noise in the excitation source will be removed as the application is ratiometric. If the ADuC824 is not used in a ratiometric application, a low noise reference should be used. Recommended reference voltage sources for the ADuC824 include the AD780, REF43, and REF192.

It should also be noted that the reference inputs provide a high impedance, dynamic load. Because the input impedance of each reference input is dynamic, resistor/capacitor combinations on these inputs can cause dc gain errors depending on the output impedance of the source that is driving the reference inputs. Reference voltage sources, like those recommended above (e.g., AD780) will typically have low output impedances and therefore decoupling capacitors on the REFIN(+) input would be recommended. Deriving the reference input voltage across an external resistor, as shown in Figure 53, will mean that the reference input sees a significant external source impedance. External decoupling on the REFIN(+) and REFIN(-) pins would not be recommended in this type of circuit configuration.

Reference Detect

The ADuC824 includes on-chip circuitry to detect if the part has a valid reference for conversions or calibrations. If the voltage between the external REFIN(+) and REFIN(–) pins goes below 0.3 V or either the REFIN(+) or REFIN(–) inputs is open circuit, the ADuC824 detects that it no longer has a valid reference. In this case, the NOXREF bit of the ADCSTAT SFR is set to a 1. If the ADuC824 is performing normal conversions and the NOXREF bit becomes active, the conversion results revert to all 1s. Therefore, it is not necessary to continuously monitor the status of the NOXREF bit when performing conversions. It is only necessary to verify its status if the conversion result read from the ADC Data Register is all 1s.

If the ADuC824 is performing either an offset or gain calibration and the NOXREF bit becomes active, the updating of the respective calibration registers is inhibited to avoid loading incorrect coefficients to these registers, and the appropriate ERR0 or ERR1 bits in the ADCSTAT SFR are set. If the user is concerned about verifying that a valid reference is in place every time a calibration is performed, the status of the ERR0 or ERR1 bit should be checked at the end of the calibration cycle.

Sigma-Delta Modulator

A sigma-delta ADC generally consists of two main blocks, an analog modulator and a digital filter. In the case of the ADuC824 ADCs, the analog modulators consist of a difference amplifier, an integrator block, a comparator, and a feedback DAC as illustrated in Figure 21.

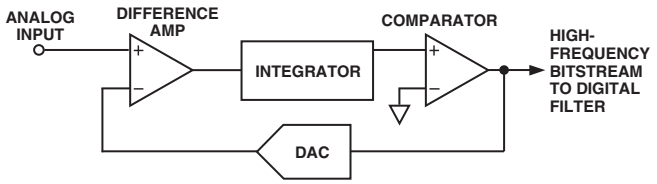

Figure 21. Sigma-Delta Modulator Simplified Block Diagram

In operation, the analog signal sample is fed to the difference amplifier along with the output of the feedback DAC. The difference between these two signals is integrated and fed to the comparator. The output of the comparator provides the input to the feedback DAC so the system functions as a negative feedback loop that tries to minimize the difference signal. The digital data that represents the analog input voltage is contained in the duty cycle of the pulse train appearing at the output of the comparator. This duty cycle data can be recovered as a data word using a subsequent digital filter stage. The sampling frequency of the modulator loop is many times higher than the bandwidth of the input signal. The integrator in the modulator shapes the quantization noise (which results from the analog-to-digital conversion) so that the noise is pushed toward one-half of the modulator frequency.

Digital Filter

The output of the sigma-delta modulator feeds directly into the digital filter. The digital filter then band-limits the response to a frequency significantly lower than one-half of the modulator frequency. In this manner, the 1-bit output of the comparator is translated into a band-limited, low noise output from the ADuC824 ADCs.

The ADuC824 filter is a low-pass, $Sinc^3$ or $(sinx/x)^3$ filter whose primary function is to remove the quantization noise introduced at the modulator. The cutoff frequency and decimated output data rate of the filter are programmable via the SF (Sinc Filter) SFR as described in Table VII.

Figure 22 shows the frequency response of the ADC channel at the default SF word of 69 dec or 45 hex, yielding an overall output update rate of just under 20 Hz.

It should be noted that this frequency response allows frequency components higher than the ADC Nyquist frequency to pass through the ADC, in some cases without significant attenuation. These components may, therefore, be aliased and appear in-band after the sampling process.

It should also be noted that rejection of mains-related frequency components, i.e., 50 Hz and 60 Hz, is seen to be at level of >65 dB at 50 Hz and >100 dB at 60 Hz. This confirms the data sheet specifications for 50 Hz/60 Hz Normal Mode Rejection (NMR) at a 20 Hz update rate.

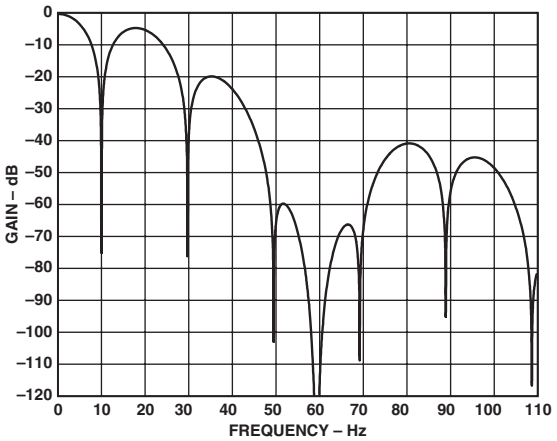

Figure 22. Filter Response, SF = 69 dec

The response of the filter, however, will change with SF word as can be seen in Figure 23, which shows >90 dB NMR at 50 Hz and >70 dB NMR at 60 Hz when SF = 255 dec.

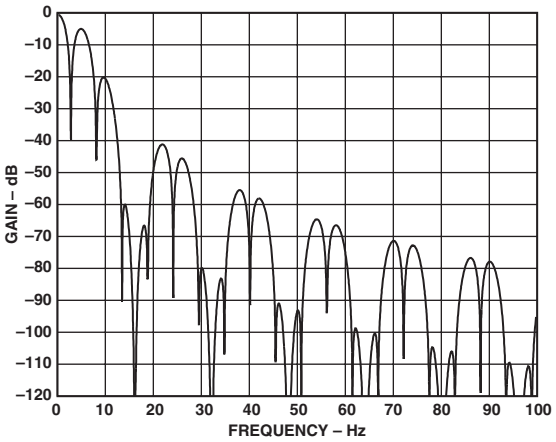

Figure 23. Filter Response, SF = 255 dec

Figures 24 and 25 show the NMR for 50 Hz and 60 Hz across the full range of SF word, i.e., SF = 13 dec to SF = 255 dec.

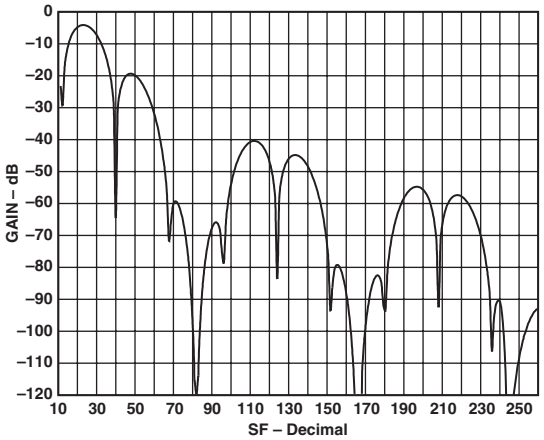

Figure 24. 50 Hz Normal Mode Rejection vs. SF

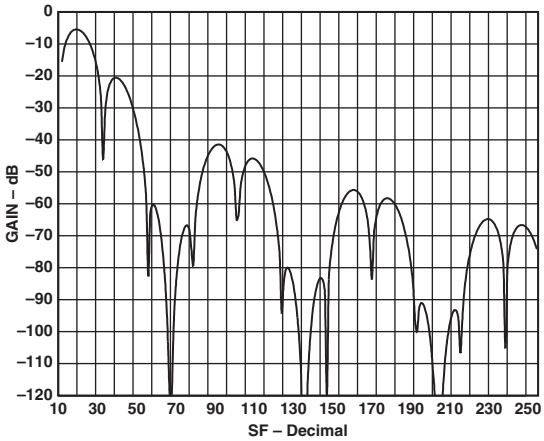

Figure 25. 60 Hz Normal Mode Rejection vs. SF

ADC Chopping

Both ADCs on the ADuC824 implement a chopping scheme whereby the ADC repeatability reverses its inputs. The decimated digital output words from the $Sinc^3$ filters therefore have a positive offset and negative offset term included.

As a result, a final summing stage is included in each ADC so that each output word from the filter is summed and averaged with the previous filter output to produce a new valid output result to be written to the ADC data SFRs. In this way, while the ADC throughput or update rate is as discussed earlier and illustrated in Table VII, the full settling time through the ADC (or the time to a first conversion result), will actually be given by $2 \times t_{ADC}$.

The chopping scheme incorporated in the ADuC824 ADC results in excellent dc offset and offset drift specifications and is extremely beneficial in applications where drift, noise rejection, and optimum EMI rejection are important factors.

Calibration

The ADuC824 provides four calibration modes that can be programmed via the mode bits in the ADCMODE SFR detailed in Table IV. In fact, every ADuC824 has already been factory calibrated. The resultant Offset and Gain calibration coefficients for both the primary and auxiliary ADCs are stored on-chip in manufacturing-specific Flash/EE memory locations. At power-on, these factory calibration coefficients are automatically downloaded to the calibration registers in the ADuC824 SFR space. Each ADC (primary and auxiliary) has dedicated calibration SFRs, these have been described earlier as part of the general ADC SFR description. However, the factory calibration values in the ADC calibration SFRs will be overwritten if any one of the four calibration options are initiated and that ADC is enabled via the ADC enable bits in ADCMODE.

Even though an internal offset calibration mode is described below, it should be recognized that both ADCs are chopped. This chopping scheme inherently minimizes offset and means that an internal offset calibration should never be required. Also, because factory 5 V/25°C gain calibration coefficients are automatically present at power-on, an internal full-scale calibration will only be required if the part is being operated at 3 V or at temperatures significantly different from 25°C.

The ADuC824 offers "internal" or "system" calibration facilities. For full calibration to occur on the selected ADC, the calibration logic must record the modulator output for two different input conditions. These are "zero-scale" and "full-scale" points. These points are derived by performing a conversion on the different input voltages provided to the input of the modulator during calibration. The result of the "zero-scale" calibration conversion is stored in the Offset Calibration Registers for the appropriate ADC. The result of the "full-scale" calibration conversion is stored in the Gain Calibration Registers for the appropriate ADC. With these readings, the calibration logic can calculate the offset and the gain slope for the input-to-output transfer function of the converter.

During an "internal" zero-scale or full-scale calibration, the respective "zero" input and "full-scale" input are automatically connected to the ADC input pins internally to the device. A "system" calibration, however, expects the system zero-scale and system full-scale voltages to be applied to the external ADC pins before the calibration mode is initiated. In this way external ADC errors are taken into account and minimized as a result of system calibration. It should also be noted that to optimize calibration accuracy, all ADuC824 ADC calibrations are carried out automatically at the slowest update rate.

Internally in the ADuC824, the coefficients are normalized before being used to scale the words coming out of the digital filter. The offset calibration coefficient is subtracted from the result prior to the multiplication by the gain coefficient. All ADuC824 ADC specifications will only apply after a zero-scale and full-scale calibration at the operating point (supply voltage/temperature) of interest.

From an operational point of view, a calibration should be treated like another ADC conversion. A zero-scale calibration (if required) should always be carried out before a full-scale calibration. System software should monitor the relevant ADC RDY0/1 bit in the ADCSTAT SFR to determine end of calibration via a polling sequence or interrupt driven routine.

NONVOLATILE FLASH/EE MEMORY

Flash/EE Memory Overview

The ADuC824 incorporates Flash/EE memory technology on-chip to provide the user with nonvolatile, in-circuit reprogrammable, code and data memory space.

Flash/EE memory is a relatively recent type of nonvolatile memory technology and is based on a single transistor cell architecture.

This technology is basically an outgrowth of EPROM technology and was developed through the late 1980s. Flash/EE memory takes the flexible in-circuit reprogrammable features of EEPROM and combines them with the space efficient/density features of EPROM (see Figure 26).

Because Flash/EE technology is based on a single transistor cell architecture, a Flash memory array, like EPROM, can be implemented to achieve the space efficiencies or memory densities required by a given design.

Like EEPROM, Flash memory can be programmed in-system at a byte level, although it must first be erased; the erase being performed in page blocks. Thus, Flash memory is often and more correctly referred to as Flash/EE memory.

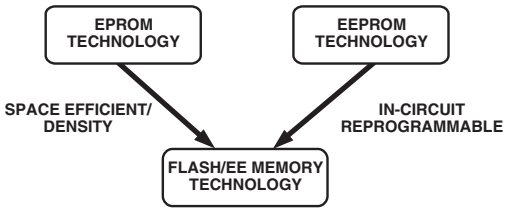

Figure 26. Flash/EE Memory Development

Overall, Flash/EE memory represents a step closer to the ideal memory device that includes nonvolatility, in-circuit programmability, high density and low cost. Incorporated in the ADuC824, Flash/EE memory technology allows the user to update program code space in-circuit, without the need to replace one-time programmable (OTP) devices at remote operating nodes.

Flash/EE Memory and the ADuC824

The ADuC824 provides two arrays of Flash/EE memory for user applications. 8K bytes of Flash/EE Program space are provided on-chip to facilitate code execution without any external discrete ROM device requirements. The program memory can be programmed using conventional third party memory programmers. This array can also be programmed in-circuit, using the serial download mode provided.

A 640-Byte Flash/EE Data Memory space is also provided on-chip. This may be used as a general-purpose nonvolatile scratchpad area. User access to this area is via a group of six SFRs. This space can be programmed at a byte level, although it must first be erased in 4-byte pages.

ADuC824 Flash/EE Memory Reliability

The Flash/EE Program and Data Memory arrays on the ADuC824 are fully qualified for two key Flash/EE memory characteristics, namely Flash/EE Memory Cycling Endurance and Flash/EE Memory Data Retention.

Endurance quantifies the ability of the Flash/EE memory to be cycled through many Program, Read, and Erase cycles. In real terms, a single endurance cycle is composed of four independent, sequential events. These events are defined as:

a. initial page erase sequence
b. read/verify sequence
c. byte program sequence
d. second read/verify sequence

} A single Flash/EE Memory Endurance Cycle

In reliability qualification, every byte in both the program and data Flash/EE memory is cycled from 00 hex to FFhex until a first fail is recorded signifying the endurance limit of the on-chip Flash/EE memory.

As indicated in the specification pages of this data sheet, the ADuC824 Flash/EE Memory Endurance qualification has been carried out in accordance with JEDEC Specification A117 over the industrial temperature range of –40°C, +25°C, and +85°C. The results allow the specification of a minimum endurance figure over supply and temperature of 100,000 cycles, with an endurance figure of 700,000 cycles being typical of operation at 25°C.

Retention quantifies the ability of the Flash/EE memory to retain its programmed data over time. Again, the ADuC824 has been qualified in accordance with the formal JEDEC Retention Lifetime Specification (A117) at a specific junction temperature (T_J = 55°C). As part of this qualification procedure, the Flash/EE memory is cycled to its specified endurance limit described above, before data retention is characterized. This means that the Flash/EE memory is guaranteed to retain its data for its full specified retention lifetime every time the Flash/EE memory is reprogrammed. It should also be noted that retention lifetime, based on an activation energy of 0.6 eV, will derate with T_J as shown in Figure 27.

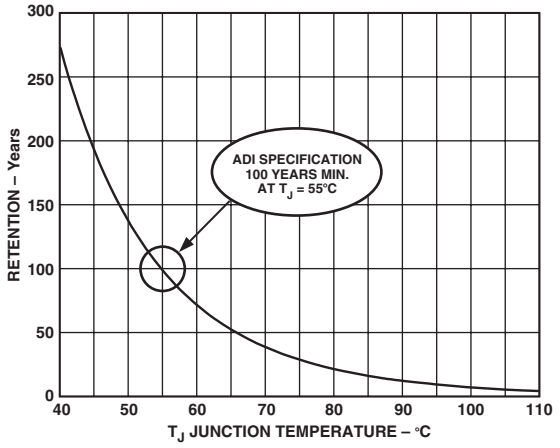

Figure 27. Flash/EE Memory Data Retention

Using the Flash/EE Program Memory

The 8 Kbyte Flash/EE Program Memory array is mapped into the lower 8 Kbytes of the 64 Kbytes program space addressable by the ADuC824, and is used to hold user code in typical applications.

The program memory Flash/EE memory arrays can be programmed in one of two modes, namely:

Serial Downloading (In-Circuit Programming)

As part of its factory boot code, the ADuC824 facilitates serial code download via the standard UART serial port. Serial download mode is automatically entered on power-up if the external pin, $\overline{PSEN}$, is pulled low through an external resistor as shown in Figure 28. Once in this mode, the user can download code to the program memory array while the device is sited in its target application hardware. A PC serial download executable is provided as part of the ADuC824 QuickStart development system. The Serial Download protocol is detailed in a MicroConverter Applications Note uC004 available from the ADI MicroConverter Website at www.analog.com/microconverter.

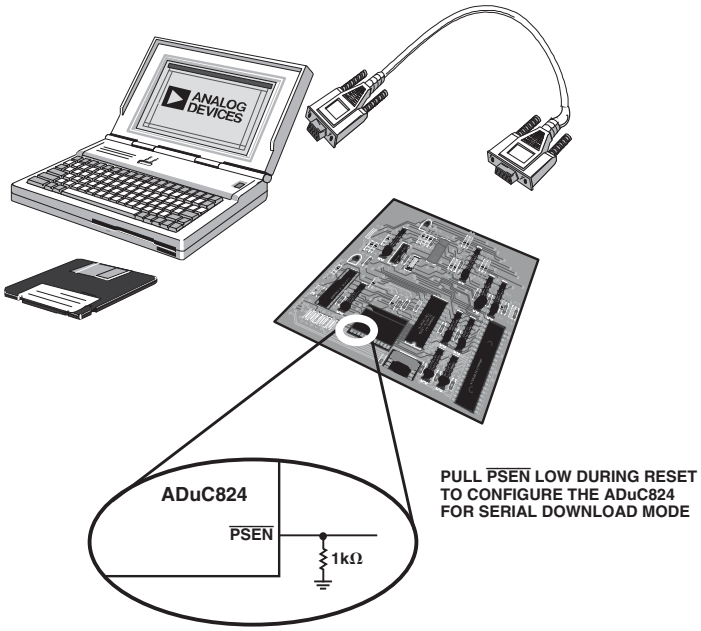

Figure 28. Flash/EE Memory Serial Download Mode Programming

Parallel Programming

The parallel programming mode is fully compatible with conventional third party Flash or EEPROM device programmers. A block diagram of the external pin configuration required to support parallel programming is shown in Figure 29. In this mode, Ports 0, 1, and 2 operate as the external data and address bus interface, ALE operates as the Write Enable strobe, and Port 3 is used as a general configuration port that configures the device for various program and erase operations during parallel programming.

The high voltage (12 V) supply required for Flash/EE programming is generated using on-chip charge pumps to supply the high voltage program lines.

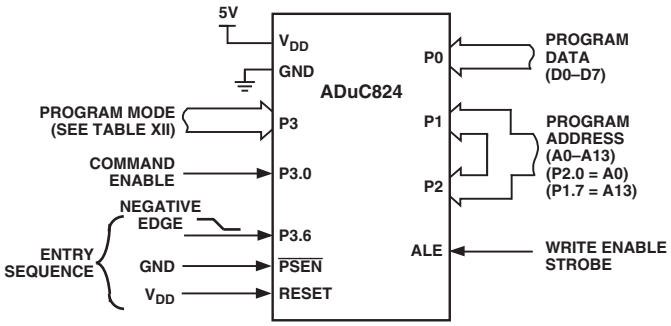

Figure 29. Flash/EE Memory Parallel Programming

Table XII. Flash/EE Memory Parallel Programming Modes

Port 3 Pins							Programming
0.7	0.6	0.5	0.4	0.3	0.2	0.1	Mode
X	X	X	X	0	0	0	Erase Flash/EE Program, Data, and Security Modes
X	X	X	X	0	0	1	Read Device Signature/ID
X	X	X	1	0	1	0	Program Code Byte
X	X	X	0	0	1	0	Program Data Byte
X	X	X	1	0	1	1	Read Code Byte
X	X	X	0	0	1	1	Read Data Byte
X	X	X	X	1	0	0	Program Security Modes
X	X	X	X	1	0	1	Read/Verify Security Modes
All other codes							Redundant

Flash/EE Program Memory Security

The ADuC824 facilitates three modes of Flash/EE program memory security. These modes can be independently activated, restricting access to the internal code space. These security modes can be enabled as part of the user interface available on all ADuC824 serial or parallel programming tools referenced on the MicroConverter web page at www.analog.com/microconverter. The security modes available on the ADuC824 are described as follows:

Lock Mode

This mode locks code in memory, disabling parallel programming of the program memory although reading the memory in parallel mode is still allowed. This mode is deactivated by initiating a 'code-erase' command in serial download or parallel programming modes.

Secure Mode

This mode locks code in memory, disabling parallel programming (program and verify/read commands) as well as disabling the execution of a 'MOVC' instruction from external memory, which is attempting to read the op codes from internal memory. This mode is deactivated by initiating a "code-erase" command in serial download or parallel programming modes.

Serial Safe Mode

This mode disables serial download capability on the device. If Serial Safe mode is activated and an attempt is made to reset the part into serial download mode, i.e., RESET asserted and deasserted with $\overline{PSEN}$ low, the part will interpret the serial download reset as a normal reset only. It will therefore not enter serial download mode but only execute a normal reset sequence. Serial Safe mode can only be disabled by initiating a code-erase command in parallel programming mode.

Using the Flash/EE Data Memory

The user Flash/EE data memory array consists of 640 bytes that are configured into 160 (00H to 9FH) 4-byte pages as shown in Figure 30.

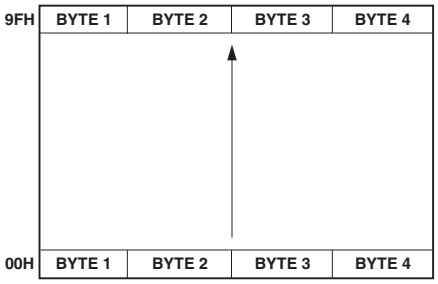

Figure 30. Flash/EE Data Memory Configuration

As with other ADuC824 user-peripheral circuits, the interface to this memory space is via a group of registers mapped in the SFR space. A group of four data registers (EDATA1–4) are used to hold 4-byte page data just accessed. EADRL is used to hold the 8-bit address of the page to be accessed. Finally, ECON is an 8-bit control register that may be written with one of five Flash/EE memory access commands to trigger various read, write, erase, and verify functions. These registers can be summarized as follows:

ECON:	SFR Address:	B9H
	Function:	Controls access to 640 Bytes Flash/EE Data Space.
	Default:	00H
EADRL:	SFR Address:	C6H
	Function:	Holds the Flash/EE Data Page Address. (640 Bytes => 160 Page Addresses.)
	Default:	00H
EDATA 1–4:		
	SFR Address:	BCH to BFH respectively
	Function:	Holds Flash/EE Data memory page write or page read data bytes.
	Default:	EDATA1–2 –> 00H EDATA3–4 –> 00H

A block diagram of the SFR interface to the Flash/EE Data Memory array is shown in Figure 31.

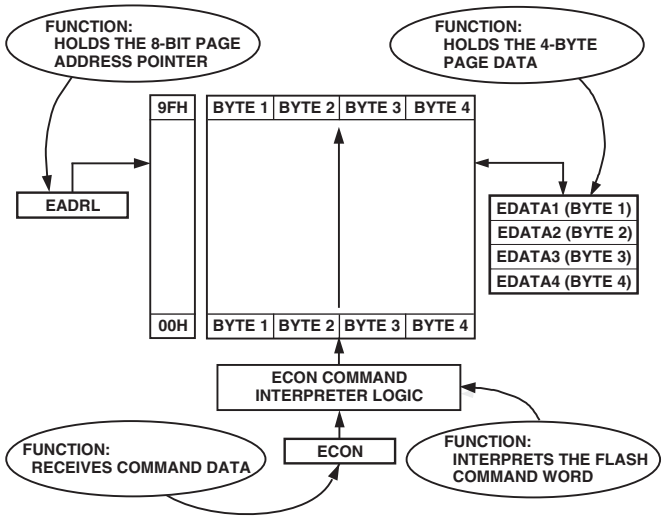

Figure 31. Flash/EE Data Memory Control and Configuration

ECON—Flash/EE Memory Control SFR

This SFR acts as a command interpreter and may be written with one of five command modes to enable various read, program and erase cycles as detailed in Table XIII:

Table XIII. ECON–Flash/EE Memory Control Register Command Modes

Command Byte	Command Mode
01H	READ COMMAND. Results in four bytes being read into EDATA1–4 from memory page address contained in EADRL.
02H	PROGRAM COMMAND. Results in four bytes (EDATA1–4) being written to memory page address in EADRL. This write command assumes the designated "write" page has been pre-erased.
03H	RESERVED FOR INTERNAL USE. 03H should not be written to the ECON SFR.
04H	VERIFY COMMAND. Allows the user to verify if data in EDATA1–4 is contained in page address designated by EADRL. A subsequent read of the ECON SFR will result in a "zero" being read if the verification is valid, a nonzero value will be read to indicate an invalid verification.
05H	ERASE COMMAND. Results in an erase of the 4-byte page designated in EADRL.
06H	ERASE-ALL COMMAND. Results in erase of the full Flash/EE Data memory 160-page (640 bytes) array.
07H to FFH	RESERVED COMMANDS. Commands reserved for future use.

Flash/EE Memory Timing

The typical program/erase times for the Flash/EE Data Memory are:

Erase Full Array (640 Bytes) – 2 ms
Erase Single Page (4 Bytes) – 2 ms
Program Page (4 Bytes) – 250 µs
Read Page (4 Bytes) – Within Single Instruction Cycle

Using the Flash/EE Memory Interface

As with all Flash/EE memory architectures, the array can be programmed in-system at a byte level, although it must be erased first; the erasure being performed in page blocks (4-byte pages in this case).

A typical access to the Flash/EE Data array will involve setting up the page address to be accessed in the EADRL SFR, configuring the EDATA1–4 with data to be programmed to the array (the EDATA SFRs will not be written for read accesses) and finally, writing the ECON command word which initiates one of the six modes shown in Table XIII.

It should be noted that a given mode of operation is initiated as soon as the command word is written to the ECON SFR. The core microcontroller operation on the ADuC824 is idled until the requested Program/Read or Erase mode is completed.

In practice, this means that even though the Flash/EE memory mode of operation is typically initiated with a two-machine cycle MOV instruction (to write to the ECON SFR), the next instruction will not be executed until the Flash/EE operation is complete (250 µs or 2 ms later). This means that the core will not respond to Interrupt requests until the Flash/EE operation is complete, although the core peripheral functions like Counter/Timers will continue to count and time as configured throughout this period.

Erase-All

Although the 640-byte User Flash/EE array is shipped from the factory pre-erased, i.e., Byte locations set to FFH, it is nonetheless good programming practice to include an erase-all routine as part of any configuration/setup code running on the ADuC824. An "ERASE-ALL" command consists of writing "06H" to the ECON SFR, which initiates an erase of all 640 byte locations in the Flash/EE array. This command coded in 8051 assembly would appear as:

```
MOV ECON, #06H    ; Erase all Command
                  ; 2 ms Duration
```

Program a Byte

In general terms, a byte in the Flash/EE array can only be programmed if it has previously been erased. To be more specific, a byte can only be programmed if it already holds the value FFH. Because of the Flash/EE architecture, this erasure must happen at a page level; therefore, a minimum of four bytes (1 page) will be erased when an erase command is initiated.

A more specific example of the Program-Byte process is shown below. In this example the user writes F3H into the second byte on Page 03H of the Flash/EE Data Memory space while preserving the other three bytes already in this page. As the user is only required to modify one of the page bytes, the full page must be first read so that this page can then be erased without the existing data being lost.

This example, coded in 8051 assembly, would appear as:

```
MOV EADRL,#03H   ; Set Page Address Pointer
MOV ECON,#01H    ; Read Page
MOV EDATA2,#0F3H ; Write New Byte
MOV ECON,#05H    ; Erase Page
MOV ECON,#03H    ; Write Page (Program Flash/EE)
```

USER INTERFACE TO OTHER ON-CHIP ADuC824 PERIPHERALS

The following section gives a brief overview of the various peripherals also available on-chip. A summary of the SFRs used to control and configure these peripherals is also given.

DAC

The ADuC824 incorporates a 12-bit, voltage output DAC on-chip. It has a rail-to-rail voltage output buffer capable of driving 10 kΩ/100 pF. It has two selectable ranges, 0 V to V_{REF} (the internal bandgap 2.5 V reference) and 0 V to AV_{DD}. It can operate in 12-bit or 8-bit mode. The DAC has a control register, DACCON, and two data registers, DACH/L. The DAC output can be programmed to appear at Pin 3 or Pin 12. It should be noted that in 12-bit mode, the DAC voltage output will be updated as soon as the DACL data SFR has been written; therefore, the DAC data registers should be updated as DACH first followed by DACL.

DACCON	**DAC Control Register**
SFR Address	FDH
Power-On Default Value	00H
Bit Addressable	No

---	**---**	**---**	**DACPIN**	**DAC8**	**DACRN**	**$\overline{\text{DACCLR}}$**	**DACEN**

Table XIV. DACCON SFR Bit Designations

Bit	Name	Description
7	---	Reserved for Future Use.
6	---	Reserved for Future Use.
5	---	Reserved for Future Use.
4	DACPIN	DAC Output Pin Select. *Set* by the user to direct the DAC output to Pin 12 (P1.7/AIN4/DAC). *Cleared* by user to direct the DAC output to Pin 3 (P1.2/DAC/IEXC1).
3	DAC8	DAC 8-bit Mode Bit. *Set* by user to enable 8-bit DAC operation. In this mode the 8-bits in DACL SFR are routed to the 8 MSBs of the DAC and the 4 LSBs of the DAC are set to zero. *Cleared* by user to operate the DAC in its normal 12-bit mode of operation.
2	DACRN	DAC Output Range Bit. *Set* by user to configure DAC range of 0 – AV_{DD}. *Cleared* by user to configure DAC range of 0 – 2.5 V.
1	$\overline{\text{DACCLR}}$	DAC Clear Bit. *Set* to ‘1’ by user to enable normal DAC operation. *Cleared* to ‘0’ by user to reset DAC data registers DACl/H to zero.
0	DACEN	DAC Enable Bit. *Set* to ‘1’ by user to enable normal DAC operation. *Cleared* to ‘0’ by user to power-down the DAC.

DACH/L	**DAC Data Registers**	
Function	DAC Data Registers, written by user to update the DAC output.	
SFR Address	DACL (DAC Data Low Byte)	–>FBH
	DACH (DAC Data High Byte)	–>FCH
Power-On Default Value	00H	–>Both Registers
Bit Addressable	No	–>Both Registers

The 12-bit DAC data should be written into DACH/L right-justified such that DACL contains the lower eight bits, and the lower nibble of DACH contains the upper four bits.

ON-CHIP PLL

The ADuC824 is intended for use with a 32.768 kHz watch crystal. A PLL locks onto a multiple (384) of this to provide a stable 12.582912 MHz clock for the system. The core can operate at this frequency or at binary submultiples of it to allow power saving in cases where maximum core performance is not required. The default core clock is the PLL clock divided by 8 or 1.572864 MHz. The ADC clocks are also derived from the PLL clock, with the modulator rate being the same as the crystal oscillator frequency. The above choice of frequencies ensures that the modulators and the core will be synchronous, regardless of the core clock rate. The PLL control register is PLLCON.

PLLCON	**PLL Control Register**
SFR Address	D7H
Power-On Default Value	03H
Bit Addressable	No

OSC_PD	**LOCK**	**---**	**$\overline{\text{LTEA}}$**	**FINT**	**CD2**	**CD1**	**CD0**

Table XV. PLLCON SFR Bit Designations

Bit	Name	Description
7	OSC_PD	Oscillator Power-down Bit. *Set* by user to halt the 32 kHz oscillator in power-down mode. *Cleared* by user to enable the 32 kHz oscillator in power-down mode. This feature allows the TIC to continue counting even in power-down mode.
6	LOCK	PLL Lock Bit. This is a read only bit. *Set* automatically at power-on to indicate the PLL loop is correctly tracking the crystal clock. If the external crystal becomes subsequently disconnected the PLL will rail and the core will halt. *Cleared* automatically at power-on to indicate the PLL is not correctly tracking the crystal clock. This may be due to the absence of a crystal clock or an external crystal at power-on. In this mode, the PLL output can be 12.58 MHz ± 20%.
5	---	Reserved for future use; should be written with '0.'
4	$\overline{\text{LTEA}}$	Reading this bit returns the state of the external $\overline{\text{EA}}$ pin latched at reset or power-on.
3	FINT	Fast Interrupt Response Bit. *Set* by user enabling the response to any interrupt to be executed at the fastest core clock frequency, regardless of the configuration of the CD2–0 bits (see below). Once user code has returned from an interrupt, the core resumes code execution at the core clock selected by the CD2–0 bits. *Cleared* by user to disable the fast interrupt response feature.
2	CD2	CPU (Core Clock) Divider Bits.
1	CD1	This number determines the frequency at which the microcontroller core will operate.
0	CD0	

CD2	CD1	CD0	Core Clock Frequency (MHz)
0	0	0	12.582912
0	0	1	6.291456
0	1	0	3.145728
0	1	1	1.572864 (Default Core Clock Frequency)
1	0	0	0.786432
1	0	1	0.393216
1	1	0	0.196608
1	1	1	0.098304

TIME INTERVAL COUNTER (TIC)

A time interval counter is provided on-chip for counting longer intervals than the standard 8051-compatible timers are capable of. The TIC is capable of timeout intervals ranging from 1/128th second to 255 hours. Furthermore, this counter is clocked by the crystal oscillator rather than the PLL and thus has the ability to remain active in power-down mode and time long power-down intervals. This has obvious applications for remote battery-powered sensors where regular widely spaced readings are required.

Six SFRs are associated with the time interval counter, TIMECON being its control register. Depending on the configuration of the IT0 and IT1 bits in TIMECON, the selected time counter register overflow will clock the interval counter. When this counter is equal to the time interval value loaded in the INTVAL SFR, the TII bit (TIMECON.2) is set and generates an interrupt if enabled (See IEIP2 SFR description under Interrupt System later in this data sheet.) If the ADuC824 is in power-down mode, again with TIC interrupt enabled, the TII bit will wake up the device and resume code execution by vectoring directly to the TIC interrupt service vector address at 0053 hex. The TIC-related SFRs are described in Table XVI. Note also that the timebase SFRs can be written initially with the current time, the TIC can then be controlled and accessed by user software. In effect, this facilitates the implementation of a real-time clock. A block diagram of the TIC is shown in Figure 32.

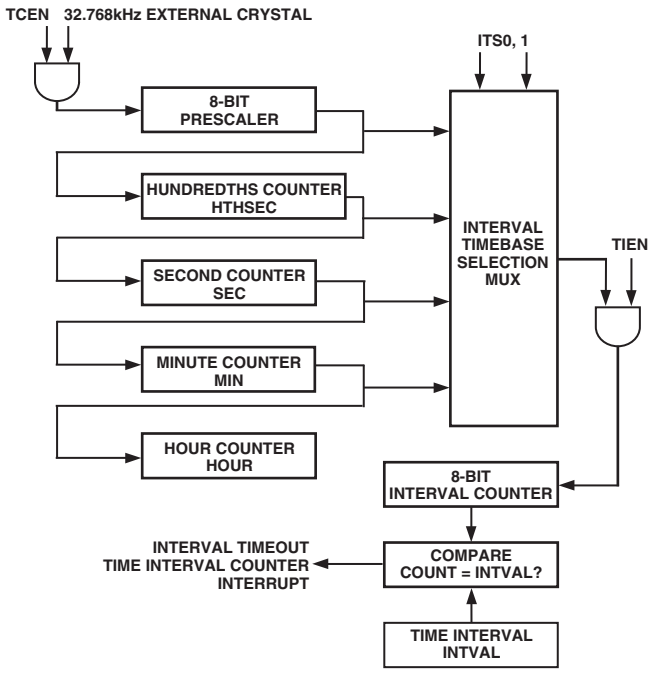

Figure 32. TIC, Simplified Block Diagram

TIMECON — **TIC CONTROL REGISTER**

SFR Address: A1H
Power-On Default Value: 00H
Bit Addressable: No

---	---	ITS1	ITS0	STI	TII	TIEN	TCEN

Table XVI. TIMECON SFR Bit Designations

Bit	Name	Description
7	---	Reserved for Future Use.
6	---	Reserved for Future Use. For future product code compatibility this bit should be written as a '1.'
5	ITS1	Interval Timebase Selection Bits.
4	ITS0	Written by user to determine the interval counter update rate. ITS1 ITS0 Interval Timebase 0 0 1/128 Second 0 1 Seconds 1 0 Minutes 1 1 Hours
3	STI	Single Time Interval Bit. *Set* by user to generate a single interval timeout. If set, a timeout will clear the TIEN bit. *Cleared* by user to allow the interval counter to be automatically reloaded and start counting again at each interval timeout.
2	TII	TIC Interrupt Bit. *Set* when the 8-bit Interval Counter matches the value in the INTVAL SFR. *Cleared* by user software.
1	TIEN	Time Interval Enable Bit. *Set* by user to enable the 8-bit time interval counter. *Cleared* by user to disable and clear the contents of the interval counter.
0	TCEN	Time Clock Enable Bit. *Set* by user to enable the time clock to the time interval counters. *Cleared* by user to disable the clock to the time interval counters and clear the time interval SFRs. The time registers (HTHSEC, SEC, MIN and HOUR) can be written while TCEN is low.

INTVAL	**User Time Interval Select Register**
Function	User code writes the required time interval to this register. When the 8-bit interval counter is equal to the time interval value loaded in the INTVAL SFR, the TII bit (TIMECON.2) bit is set and generates an interrupt if enabled. (See IEIP2 SFR description under Interrupt System later in this data sheet.)
SFR Address	A6H
Power-On Default Value	00H
Bit Addressable	No
Valid Value	0 to 255 decimal

HTHSEC	**Hundredths Seconds Time Register**
Function	This register is incremented in (1/128) second intervals once TCEN in TIMECON is active. The HTHSEC SFR counts from 0 to 127 before rolling over to increment the SEC time register.
SFR Address	A2H
Power-On Default Value	00H
Bit Addressable	No
Valid Value	0 to 127 decimal

SEC	**Seconds Time Register**
Function	This register is incremented in 1-second intervals once TCEN in TIMECON is active. The SEC SFR counts from 0 to 59 before rolling over to increment the MIN time register.
SFR Address	A3H
Power-On Default Value	00H
Bit Addressable	No
Valid Value	0 to 59 decimal

MIN	**Minutes Time Register**
Function	This register is incremented in 1-minute intervals once TCEN in TIMECON is active. The MIN counts from 0 to 59 before rolling over to increment the HOUR time register.
SFR Address	A4H
Power-On Default Value	00H
Bit Addressable	No
Valid Value	0 to 59 decimal

HOUR	**Hours Time Register**
Function	This register is incremented in 1-hour intervals once TCEN in TIMECON is active. The HOUR SFR counts from 0 to 23 before rolling over to 0.
SFR Address	A5H
Power-On Default Value	00H
Bit Addressable	No
Valid Value	0 to 23 decimal

WATCHDOG TIMER

The purpose of the watchdog timer is to generate a device reset or interrupt within a reasonable amount of time if the ADuC824 enters an erroneous state, possibly due to a programming error, electrical noise, or RFI. The Watchdog function can be disabled by clearing the WDE (Watchdog Enable) bit in the Watchdog Control (WDCON) SFR. When enabled; the watchdog circuit will generate a system reset or interrupt (WDS) if the user program fails to set the watchdog (WDE) bit within a predetermined amount of time (see PRE3–0 bits in WDCON). The watchdog timer itself is a 16-bit counter that is clocked at 32.768 kHz. The watchdog time-out interval can be adjusted via the PRE3–0 bits in WDCON. Full Control and Status of the watchdog timer function can be controlled via the watchdog timer control SFR (WDCON). The WDCON SFR can only be written by user software if the double write sequence described in WDWR below is initiated on every write access to the WDCON SFR.

WDCON	**Watchdog Timer Control Register**
SFR Address	C0H
Power-On Default Value	10H
Bit Addressable	Yes

PRE3	PRE2	PRE1	PRE0	WDIR	WDS	WDE	WDWR

Table XVII. WDCON SFR Bit Designations

Bit	Name	Description
7	PRE3	Watchdog Timer Prescale Bits.
6	PRE2	The Watchdog timeout period is given by the equation: $t_{WD} = (2^{PRE} \times (2^9/f_{PLL}))$
5	PRE1	$(0 \le PRE \le 7; f_{PLL} = 32.768$ kHz)
4	PRE0	PRE3 PRE2 PRE1 PRE0 Timout Period (ms) Action 0 0 0 0 15.6 Reset or Interrupt 0 0 0 1 31.2 Reset or Interrupt 0 0 1 0 62.5 Reset or Interrupt 0 0 1 1 125 Reset or Interrupt 0 1 0 0 250 Reset or Interrupt 0 1 0 1 500 Reset or Interrupt 0 1 1 0 1000 Reset or Interrupt 0 1 1 1 2000 Reset or Interrupt 1 0 0 0 0.0 Immediate Reset PRE3–0 > 1001 Reserved
3	WDIR	Watchdog Interrupt Response Enable Bit. If this bit is set by the user, the watchdog will generate an interrupt response instead of a system reset when the watchdog timeout period has expired. This interrupt is not disabled by the CLR EA instruction and it is also a fixed, high-priority interrupt. If the watchdog is not being used to monitor the system, it can alternatively be used as a timer. The prescaler is used to set the timeout period in which an interrupt will be generated. (See also Note 1, Table XXXIV in the Interrupt System section.)
2	WDS	Watchdog Status Bit. *Set* by the Watchdog Controller to indicate that a watchdog timeout has occurred. *Cleared* by writing a ‘0’ or by an external hardware reset. It is not cleared by a watchdog reset.
1	WDE	Watchdog Enable Bit. *Set* by user to enable the watchdog and clear its counters. If this bit is not set by the user within the watchdog timeout period, the watchdog will generate a reset or interrupt, depending on WDIR. *Cleared* under the following conditions, User writes ‘0,’ Watchdog Reset (WDIR = ‘0’); Hardware Reset; PSM Interrupt.

0	WDWR	Watchdog Write Enable Bit.
		To write data into the WDCON SFR involves a double instruction sequence. The WDWR bit must be set and the very next instruction must be a write instruction to the WDCON SFR.
		e.g., `CLR EA ; disable interrupts while writing to WDT`
		`SETB WDWR ; allow write to WDCON`
		`MOV WDCON, #72h ; enable WDT for 2.0s timeout`
		`SET B EA ; enable interrupts again (if rqd)`

POWER SUPPLY MONITOR

As its name suggests, the Power Supply Monitor, once enabled, monitors both supplies (AVDD or DVDD) on the ADuC824. It will indicate when any of the supply pins drop below one of four user-selectable voltage trip points from 2.63 V to 4.63 V. For correct operation of the Power Supply Monitor function, AV_{DD} must be equal to or greater than 2.7 V. Monitor function is controlled via the PSMCON SFR. If enabled via the IEIP2 SFR, the monitor will interrupt the core using the PSMI bit in the PSMCON SFR. This bit will not be cleared until the failing power supply has returned above the trip point for at least 250 ms. This monitor function allows the user to save working registers to avoid possible data loss due to the low supply condition, and also ensures that normal code execution will not resume until a safe supply level has been well established. The supply monitor is also protected against spurious glitches triggering the interrupt circuit.

PSMCON	**Power Supply Monitor Control Register**
SFR Address	DFH
Power-On Default Value	DEH
Bit Addressable	No

CMPD	CMPA	PSMI	TPD1	TPD0	TPA1	TPA0	PSMEN

Table XVIII. PSMCON SFR Bit Designations

Bit	Name	Description
7	CMPD	DVDD Comparator Bit This is a read-only bit and directly reflects the state of the DVDD comparator. Read ‘1’ indicates the DVDD supply is above its selected trip point. Read ‘0’ indicates the DVDD supply is below its selected trip point.
6	CMPA	AVDD Comparator Bit. This is a read-only bit and directly reflects the state of the AVDD comparator. Read ‘1’ indicates the AVDD supply is above its selected trip point. Read ‘0’ indicates the AVDD supply is below its selected trip point.
5	PSMI	Power Supply Monitor Interrupt Bit. This bit will be set high by the MicroConverter if either CMPA or CMPD are low, indicating low analog or digital supply. The PSMI bit can be used to interrupt the processor. Once CMPD and/or CMPA return (and remain) high, a 250 ms counter is started. When this counter times out, the PSMI interrupt is cleared. PSMI can also be written by the user. However, if either comparator output is low, it is not possible for the user to clear PSMI.
4	TPD1	DVDD Trip Point Selection Bits.
3	TPD0	These bits select the DVDD trip-point voltage as follows: TPD1 TPD0 Selected DVDD Trip Point (V) 0 0 4.63 0 1 3.08 1 0 2.93 1 1 2.63
2	TPA1	AVDD Trip Point Selection Bits.
1	TPA0	These bits select the AVDD trip-point voltage as follows: TPA1 TPA0 Selected AVDD Trip Point (V) 0 0 4.63 0 1 3.08 1 0 2.93 1 1 2.63
0	PSMEN	Power Supply Monitor Enable Bit. *Set* to ‘1’ by the user to enable the Power Supply Monitor Circuit. *Cleared* to ‘0’ by the user to disable the Power Supply Monitor Circuit.

SERIAL PERIPHERAL INTERFACE

The ADuC824 integrates a complete hardware Serial Peripheral Interface (SPI) interface on-chip. SPI is an industry standard synchronous serial interface that allows eight bits of data to be synchronously transmitted and received simultaneously, i.e., full duplex. It should be noted that the SPI physical interface is shared with the I^2C interface and therefore the user can only enable one or the other interface at any given time (see SPE in SPICON below). The system can be configured for Master or Slave operation and typically consists of four pins, namely:

MISO (Master In, Slave Out Data I/O Pin), Pin#14

The MISO (master in slave out) pin is configured as an input line in master mode and an output line in slave mode. The MISO line on the master (data in) should be connected to the MISO line in the slave device (data out). The data is transferred as byte wide (8-bit) serial data, MSB first.

MOSI (Master Out, Slave In Pin), Pin#27

The MOSI (master out slave in) pin is configured as an output line in master mode and an input line in slave mode. The MOSI line on the master (data out) should be connected to the MOSI line in the slave device (data in). The data is transferred as byte wide (8-bit) serial data, MSB first.

SCLOCK (Serial Clock I/O Pin), Pin#26

The master clock (SCLOCK) is used to synchronize the data being transmitted and received through the MOSI and MISO data lines. A single data bit is transmitted and received in each SCLOCK period. Therefore, a byte is transmitted/received after eight SCLOCK periods. The SCLOCK pin is configured as an output in master mode and as an input in slave mode. In master mode the bit-rate, polarity and phase of the clock are controlled by the CPOL, CPHA, SPR0 and SPR1 bits in the SPICON SFR (see Table XIX below). In slave mode the SPICON register will have to be configured with the phase and polarity (CPHA and CPOL) of the expected input clock. In both master and slave mode the data is transmitted on one edge of the SCLOCK signal and sampled on the other. It is important therefore that the CPHA and CPOL are configured the same for the master and slave devices.

$\overline{SS}$ (Slave Select Input Pin), Pin#13

The Slave Select ($\overline{SS}$) input pin is only used when the ADuC824 is configured in slave mode to enable the SPI peripheral. This line is active low. Data is only received or transmitted in slave mode when the $\overline{SS}$ pin is low, allowing the ADuC824 to be used in single master, multislave SPI configurations. If CPHA = 1 then the $\overline{SS}$ input may be permanently pulled low. With CPHA = 0 then the $\overline{SS}$ input must be driven low before the first bit in a byte wide transmission or reception and return high again after the last bit in that byte wide transmission or reception. In SPI Slave Mode, the logic level on the external $\overline{SS}$ pin (Pin# 13), can be read via the SPR0 bit in the SPICON SFR.

The following SFR registers are used to control the SPI interface.

SPICON:	**SPI Control Register**
SFR Address	F8H
Power-On Default Value	04H
Bit Addressable	Yes

ISPI	WCOL	SPE	SPIM	CPOL	CPHA	SPR1	SPR0

Table XIX. SPICON SFR Bit Designations

Bit	Name	Description
7	ISPI	SPI Interrupt Bit. *Set* by MicroConverter at the end of each SPI transfer. *Cleared* directly by user code or indirectly by reading the SPIDAT SFR
6	WCOL	Write Collision Error Bit. *Set* by MicroConverter if SPIDAT is written to while an SPI transfer is in progress. *Cleared* by user code.
5	SPE	SPI Interface Enable Bit. *Set* by user to enable the SPI interface. *Cleared* by user to enable the I^2C interface.
4	SPIM	SPI Master/Slave Mode Select Bit. *Set* by user to enable Master Mode operation (SCLOCK is an output). *Cleared* by user to enable Slave Mode operation (SCLOCK is an input).
3	CPOL	Clock Polarity Select Bit. *Set* by user if SCLOCK idles high. *Cleared* by user if SCLOCK idles low.
2	CPHA	Clock Phase Select Bit. *Set* by user if leading SCLOCK edge is to transmit data. *Cleared* by user if trailing SCLOCK edge is to transmit data.

Table XIX. SPICON SFR Bit Designations (*continued*)

Bit	Name	Description
1 0	SPR1 SPR0	SPI Bit-Rate Select Bits. These bits select the SCLOCK rate (bit-rate) in Master Mode as follows: SPR1 SPR0 Selected Bit Rate 0 0 $f_{CORE}/2$ 0 1 $f_{CORE}/4$ 1 0 $f_{CORE}/8$ 1 1 $f_{CORE}/16$ In SPI Slave Mode, i.e., SPIM = 0, the logic level on the external $\overline{SS}$ pin (Pin# 13), can be read via the SPR0 bit.

NOTE
The CPOL and CPHA bits should both contain the same values for master and slave devices.

SPIDAT — **SPI Data Register**

Function	The SPIDAT SFR is written by the user to transmit data over the SPI interface or read by user code to read data just received by the SPI interface.
SFR Address	F7H
Power-On Default Value	00H
Bit Addressable	No

Using the SPI Interface

Depending on the configuration of the bits in the SPICON SFR shown in Table XIX, the ADuC824 SPI interface will transmit or receive data in a number of possible modes. Figure 33 shows all possible ADuC824 SPI configurations and the timing relationships and synchronization between the signals involved. Also shown in this figure is the SPI interrupt bit (ISPI) and how it is triggered at the end of each byte-wide communication.

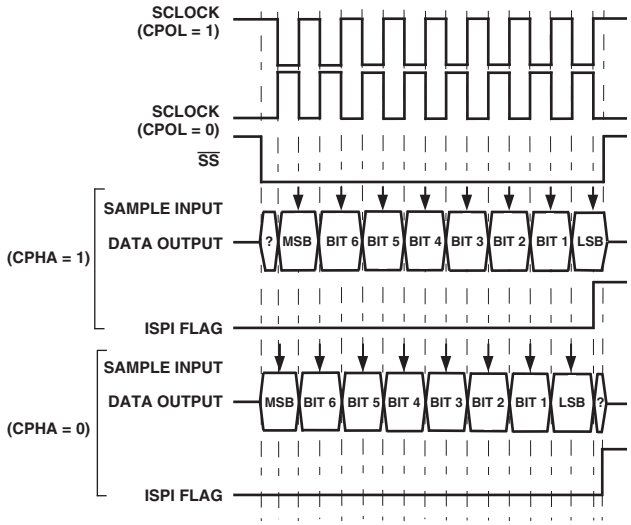

Figure 33. ADuC824, SPI Timing, All Modes

SPI Interface—Master Mode

In master mode, the SCLOCK pin is always an output and generates a burst of eight clocks whenever user code writes to the SPIDAT register. The SCLOCK bit rate is determined by SPR0 and SPR1 in SPICON. It should also be noted that the $\overline{SS}$ pin is not used in master mode. If the ADuC824 needs to assert the $\overline{SS}$ pin on an external slave device, a Port digital output pin should be used.

In master mode a byte transmission or reception is initiated by a write to SPIDAT. Eight clock periods are generated via the SCLOCK pin and the SPIDAT byte being transmitted via MOSI. With each SCLOCK period a data bit is also sampled via MISO. After eight clocks, the transmitted byte will have been completely transmitted and the input byte will be waiting in the input shift register. The ISPI flag will be set automatically and an interrupt will occur if enabled. The value in the shift register will be latched into SPIDAT.

SPI Interface—Slave Mode

In slave mode the SCLOCK is an input. The $\overline{SS}$ pin must also be driven low externally during the byte communication.

Transmission is also initiated by a write to SPIDAT. In slave mode, a data bit is transmitted via MISO and a data bit is received via MOSI through each input SCLOCK period. After eight clocks, the transmitted byte will have been completely transmitted and the input byte will be waiting in the input shift register. The ISPI flag will be set automatically and an interrupt will occur if enabled. The value in the shift register will be latched into SPIDAT only when the transmission/reception of a byte has been completed. The end of transmission occurs after the eighth clock has been received, if CPHA = 1 or when $\overline{SS}$ returns high if CPHA = 0.

I²C-COMPATIBLE INTERFACE

The ADuC824 supports a 2-wire serial interface mode which is I²C compatible. The I²C-compatible interface shares its pins with the on-chip SPI interface and therefore the user can only enable one or the other interface at any given time (see SPE in SPICON previously). An Application Note describing the operation of this interface as implemented is available from the MicroConverter Website at www.analog.com/microconverter. This interface can be configured as a Software Master or Hardware Slave, and uses two pins in the interface.

SDATA (Pin 27)	Serial Data I/O Pin
SCLOCK (Pin 26)	Serial Clock

Three SFRs are used to control the I²C-compatible interface. These are described below:

I2CCON:	**I²C Control Register**
SFR Address	E8H
Power-On Default Value	00H
Bit Addressable	Yes

MDO	MDE	MCO	MDI	I2CM	I2CRS	I2CTX	I2CI

Table XX. I2CCON SFR Bit Designations

Bit	Name	Description
7	MDO	I²C Software Master Data Output Bit (MASTER MODE ONLY). This data bit is used to implement a master I²C transmitter interface in software. Data written to this bit will be outputted on the SDATA pin if the data output enable (MDE) bit is set.
6	MDE	I²C Software Master Data Output Enable Bit (MASTER MODE ONLY). *Set* by user to enable the SDATA pin as an output (Tx). *Cleared* by the user to enable SDATA pin as an input (Rx).
5	MCO	I²C Software Master Clock Output Bit (MASTER MODE ONLY). This data bit is used to implement a master I²C transmitter interface in software. Data written to this bit will be outputted on the SCLOCK pin.
4	MDI	I²C Software Master Data Input Bit (MASTER MODE ONLY). This data bit is used to implement a master I²C receiver interface in software. Data on the SDATA pin is latched into this bit on SCLOCK if the Data Output Enable (MDE) bit is '0.'
3	I2CM	I²C Master/Slave Mode Bit. *Set* by user to enable I²C software master mode. *Cleared* by user to enable I²C hardware slave mode.
2	I2CRS	I²C Reset Bit (SLAVE MODE ONLY). *Set* by user to reset the I²C interface. *Cleared* by user code for normal I²C operation.
1	I2CTX	I²C Direction Transfer Bit (SLAVE MODE ONLY). *Set* by the MicroConverter if the interface is transmitting. *Cleared* by the MicroConverter if the interface is receiving.
0	I2CI	I²C Interrupt Bit (SLAVE MODE ONLY). *Set* by the MicroConverter after a byte has been transmitted or received. *Cleared* automatically when user code reads the I2CDAT SFR (see I2CDAT below).

I2CADD	**I²C Address Register**
Function	Holds the I²C peripheral address for the part. It may be overwritten by user code. Technical Note uC001 at www.analog.com/microconverter describes the format of the I²C standard 7-bit address in detail.
SFR Address	9BH
Power-On Default Value	55H
Bit Addressable	No

I2CDAT	**I²C Data Register**
Function	The I2CDAT SFR is written by the user to transmit data over the I²C interface or read by user code to read data just received by the I²C interface Accessing I2CDAT automatically clears any pending I²C interrupt and the I2CI bit in the I2CCON SFR. User software should only access I2CDAT once per interrupt cycle.
SFR Address	9AH
Power-On Default Value	00H
Bit Addressable	No

8051-COMPATIBLE ON-CHIP PERIPHERALS

This section gives a brief overview of the various secondary peripheral circuits are also available to the user on-chip. These remaining functions are fully 8051-compatible and are controlled via standard 8051 SFR bit definitions.

Parallel I/O Ports 0–3

The ADuC824 uses four input/output ports to exchange data with external devices. In addition to performing general-purpose I/O, some ports are capable of external memory operations; others are multiplexed with an alternate function for the peripheral features on the device. In general, when a peripheral is enabled, that pin may not be used as a general purpose I/O pin.

Port 0 is an 8-bit open drain bidirectional I/O port that is directly controlled via the Port 0 SFR (SFR address = 80 hex). Port 0 pins that have 1s written to them via the Port 0 SFR will be configured as open drain and will therefore float. In that state, Port 0 pins can be used as high impedance inputs. An external pull-up resistor will be required on Port 0 outputs to force a valid logic high level externally. Port 0 is also the multiplexed low-order address and data bus during accesses to external program or data memory. In this application it uses strong internal pull-ups when emitting 1s.

Port 1 is also an 8-bit port directly controlled via the P1 SFR (SFR address = 90 hex). The Port 1 pins are divided into two distinct pin groupings.

P1.0 and P1.1 pins on Port 1 are bidirectional digital I/O pins with internal pull-ups. If P1.0 and P1.1 have 1s written to them via the P1 SFR, these pins are pulled high by the internal pull-up resistors. In this state they can also be used as inputs; as input pins being externally pulled low, they will source current because of the internal pull-ups. With 0s written to them, both these pins will drive a logic low output voltage (VOL) and will be capable of sinking 10 mA compared to the standard 1.6 mA sink capability on the other port pins. These pins also have various secondary functions described in Table XXI.

Table XXI. Port 1, Alternate Pin Functions

Pin	Alternate Function
P1.0	T2 (Timer/Counter 2 External Input)
P1.1	T2EX (Timer/Counter 2 Capture/Reload Trigger)

The remaining Port 1 pins (P1.2–P1.7) can only be configured as Analog Input (ADC), Analog Output (DAC) or Digital Input pins. By (power-on) default these pins are configured as Analog Inputs, i.e., '1' written in the corresponding Port 1 register bit. To configure any of these pins as digital inputs, the user should write a '0' to these port bits to configure the corresponding pin as a high impedance digital input.

Port 2 is a bidirectional port with internal pull-up resistors directly controlled via the P2 SFR (SFR address = A0 hex). Port 2 pins that have 1s written to them are pulled high by the internal pull-up resistors and, in that state, they can be used as inputs. As inputs, Port 2 pins being pulled externally low will source current because of the internal pull-up resistors. Port 2 emits the high order address bytes during fetches from external program memory and middle and high order address bytes during accesses to the 24-bit external data memory space.

Port 3 is a bidirectional port with internal pull-ups directly controlled via the P2 SFR (SFR address = B0 hex). Port 3 pins that have 1s written to them are pulled high by the internal pull-ups and in that state they can be used as inputs. As inputs, Port 3 pins being pulled externally low will source current because of the internal pull-ups. Port 3 pins also have various secondary functions described in Table XXII.

Table XXII. Port 3, Alternate Pin Functions

Pin	Alternate Function
P3.0	RXD (UART Input Pin) (or Serial Data I/O in Mode 0)
P3.1	TXD (UART Output Pin) (or Serial Clock Output in Mode 0)
P3.2	$\overline{\text{INT0}}$ (External Interrupt 0)
P3.3	$\overline{\text{INT1}}$ (External Interrupt 1)
P3.4	T0 (Timer/Counter 0 External Input)
P3.5	T1 (Timer/Counter 1 External Input)
P3.6	$\overline{\text{WR}}$ (External Data Memory Write Strobe)
P3.7	$\overline{\text{RD}}$ (External Data Memory Read Strobe)

The alternate functions of P1.0, P1.1, and Port 3 pins can only be activated if the corresponding bit latch in the P1 and P3 SFRs contains a 1. Otherwise, the port pin is stuck at 0.

Timers/Counters

The ADuC824 has three 16-bit Timer/Counters: Timer 0, Timer 1, and Timer 2. The Timer/Counter hardware has been included on-chip to relieve the processor core of the overhead inherent in implementing timer/counter functionality in software. Each Timer/Counter consists of two 8-bit registers THx and TLx (x = 0, 1 and 2). All three can be configured to operate either as timers or event counters.

In 'Timer' function, the TLx register is incremented every machine cycle. Thus one can think of it as counting machine cycles. Since a machine cycle consists of 12 core clock periods, the maximum count rate is 1/12 of the core clock frequency.

In 'Counter' function, the TLx register is incremented by a 1-to-0 transition at its corresponding external input pin, T0, T1, or T2. In this function, the external input is sampled during S5P2 of every machine cycle. When the samples show a high in one cycle and a low in the next cycle, the count is incremented. The new count value appears in the register during S3P1 of the cycle following the one in which the transition was detected. Since it takes two machine cycles (24 core clock periods) to recognize a 1-to-0 transition, the maximum count rate is 1/24 of the core clock frequency. There are no restrictions on the duty cycle of the external input signal, but to ensure that a given level is sampled at least once before it changes, it must be held for a minimum of one full machine cycle. Remember that the core clock frequency is programmed via the CD0–2 selection bits in the PLLCON SFR.

User configuration and control of all Timer operating modes is achieved via three SFRs namely:

TMOD, TCON:	Control and configuration for Timers 0 and 1.
T2CON:	Control and configuration for Timer 2.

TMOD	**Timer/Counter 0 and 1 Mode Register**
SFR Address	89H
Power-On Default Value	00H
Bit Addressable	No

Gate	C/$\overline{T}$	M1	M0	Gate	C/$\overline{T}$	M1	M0

Table XXIII. TMOD SFR Bit Designations

Bit	Name	Description
7	Gate	Timer 1 Gating Control. *Set* by software to enable timer/counter 1 only while $\overline{INT1}$ pin is high and TR1 control bit is set. *Cleared* by software to enable timer 1 whenever TR1 control bit is set.
6	C/$\overline{T}$	Timer 1 Timer or Counter Select Bit. *Set* by software to select counter operation (input from T1 pin). *Cleared* by software to select timer operation (input from internal system clock).
5	M1	Timer 1 Mode Select Bit 1 (Used with M0 Bit).
4	M0	Timer 1 Mode Select Bit 0. M1 M0 0 0 TH1 operates as an 8-bit timer/counter. TL1 serves as 5-bit prescaler. 0 1 16-Bit Timer/Counter. TH1 and TL1 are cascaded; there is no prescaler. 1 0 8-Bit Auto-Reload Timer/Counter. TH1 holds a value which is to be reloaded into TL1 each time it overflows. 1 1 Timer/Counter 1 Stopped.
3	Gate	Timer 0 Gating Control. *Set* by software to enable timer/counter 0 only while $\overline{INT0}$ pin is high and TR0 control bit is set. *Cleared* by software to enable Timer 0 whenever TR0 control bit is set.
2	C/$\overline{T}$	Timer 0 Timer or Counter Select Bit. *Set* by software to select counter operation (input from T0 pin). *Cleared* by software to select timer operation (input from internal system clock).
1	M1	Timer 0 Mode Select Bit 1.
0	M0	Timer 0 Mode Select Bit 0. M1 M0 0 0 TH0 operates as an 8-bit timer/counter. TL0 serves as 5-bit prescaler. 0 1 16-Bit Timer/Counter. TH0 and TL0 are cascaded; there is no prescaler 1 0 8-Bit Auto-Reload Timer/Counter. TH0 holds a value which is to be reloaded into TL0 each time it overflows. 1 1 TL0 is an 8-bit timer/counter controlled by the standard timer 0 control bits. TH0 is an 8-bit timer only, controlled by Timer 1 control bits.

TCON: **Timer/Counter 0 and 1 Control Register**
SFR Address 88H
Power-On Default Value 00H
Bit Addressable Yes

TF1	TR1	TF0	TR0	IE1[1]	IT1[1]	IE0[1]	IT0[1]

NOTE
[1]These bits are not used in the control of timer/counter 0 and 1, but are used instead in the control and monitoring of the external $\overline{INT0}$ and $\overline{INT1}$ interrupt pins.

Table XXIV. TCON SFR Bit Designations

Bit	Name	Description
7	TF1	Timer 1 Overflow Flag. *Set* by hardware on a timer/counter 1 overflow. *Cleared* by hardware when the Program Counter (PC) vectors to the interrupt service routine.
6	TR1	Timer 1 Run Control Bit. *Set* by user to turn on timer/counter 1. *Cleared* by user to turn off timer/counter 1.
5	TF0	Timer 0 Overflow Flag. *Set* by hardware on a timer/counter 0 overflow. *Cleared* by hardware when the PC vectors to the interrupt service routine.
4	TR0	Timer 0 Run Control Bit. *Set* by user to turn on timer/counter 0. *Cleared* by user to turn off timer/counter 0.
3	IE1	External Interrupt 1 ($\overline{INT1}$) Flag. *Set* by hardware by a falling edge or zero level being applied to external interrupt pin $\overline{INT1}$, depending on bit IT1 state. *Cleared* by hardware when the when the PC vectors to the interrupt service routine only if the interrupt was transition-activated. If level-activated, the external requesting source controls the request flag, rather than the on-chip hardware.
2	IT1	External Interrupt 1 (IE1) Trigger Type. *Set* by software to specify edge-sensitive detection (i.e., 1-to-0 transition). *Cleared* by software to specify level-sensitive detection (i.e., zero level).
1	IE0	External Interrupt 0 ($\overline{INT0}$) Flag. *Set* by hardware by a falling edge or zero level being applied to external interrupt pin $\overline{INT0}$, depending on bit IT0 state. *Cleared* by hardware when the PC vectors to the interrupt service routine only if the interrupt was transition-activated. If level-activated, the external requesting source controls the request flag, rather than the on-chip hardware.
0	IT0	External Interrupt 0 (IE0) Trigger Type. *Set* by software to specify edge-sensitive detection (i.e., 1-to-0 transition). *Cleared* by software to specify level-sensitive detection (i.e., zero level).

Timer/Counter 0 and 1 Data Registers
Each timer consists of two 8-bit registers. These can be used as independent registers or combined to be a single 16-bit register depending on the timer mode configuration.

TH0 and TL0
Timer 0 high byte and low byte.
SFR Address = 8Chex, 8Ahex respectively.

TH1 and TL1
Timer 1 high byte and low byte.
SFR Address = 8Dhex, 8Bhex respectively.

TIMER/COUNTER 0 AND 1 OPERATING MODES

The following paragraphs describe the operating modes for timer/counters 0 and 1. Unless otherwise noted, it should be assumed that these modes of operation are the same for timer 0 as for timer 1.

Mode 0 (13-Bit Timer/Counter)

Mode 0 configures an 8-bit timer/counter with a divide-by-32 prescaler. Figure 34 shows mode 0 operation.

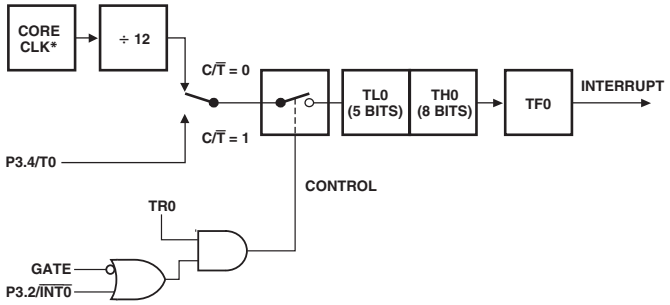

Figure 34. Timer/Counter 0, Mode 0

In this mode, the timer register is configured as a 13-bit register. As the count rolls over from all 1s to all 0s, it sets the timer overflow flag TF0. The overflow flag, TF0, can then be used to request an interrupt. The counted input is enabled to the timer when TR0 = 1 and either Gate = 0 or $\overline{INT0}$ = 1. Setting Gate = 1 allows the timer to be controlled by external input $\overline{INT0}$, to facilitate pulsewidth measurements. TR0 is a control bit in the special function register TCON; Gate is in TMOD. The 13-bit register consists of all eight bits of TH0 and the lower five bits of TL0. The upper three bits of TL0 are indeterminate and should be ignored. Setting the run flag (TR0) does not clear the registers.

Mode 1 (16-Bit Timer/Counter)

Mode 1 is the same as Mode 0, except that the timer register is running with all 16 bits. Mode 1 is shown in Figure 35.

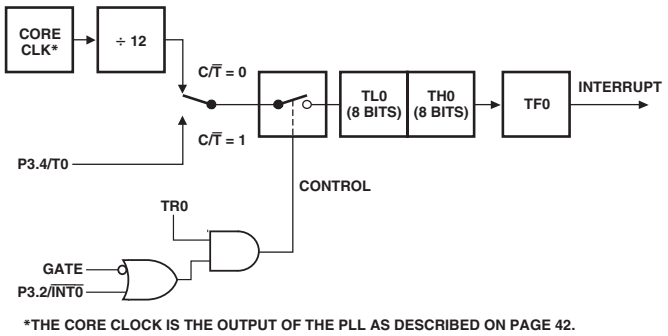

Figure 35. Timer/Counter 0, Mode 1

Mode 2 (8-Bit Timer/Counter with Auto Reload)

Mode 2 configures the timer register as an 8-bit counter (TL0) with automatic reload, as shown in Figure 36. Overflow from TL0 not only sets TF0, but also reloads TL0 with the contents of TH0, which is preset by software. The reload leaves TH0 unchanged.

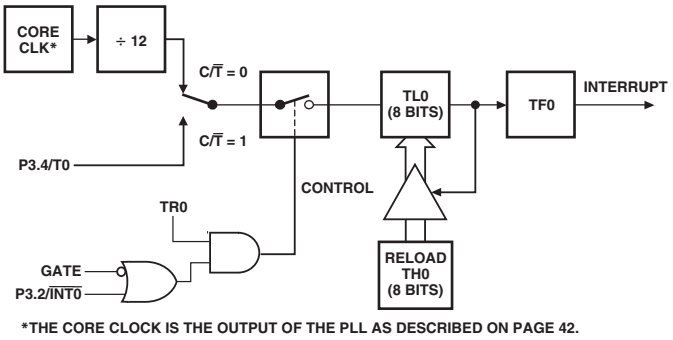

Figure 36. Timer/Counter 0, Mode 2

Mode 3 (Two 8-Bit Timer/Counters)

Mode 3 has different effects on timer 0 and timer 1. Timer 1 in Mode 3 simply holds its count. The effect is the same as setting TR1 = 0. Timer 0 in Mode 3 establishes TL0 and TH0 as two separate counters. This configuration is shown in Figure 37. TL0 uses the timer 0 control bits: C/T, Gate, TR0, $\overline{INT0}$, and TF0. TH0 is locked into a timer function (counting machine cycles) and takes over the use of TR1 and TF1 from timer 1. Thus, TH0 now controls the "timer 1" interrupt. Mode 3 is provided for applications requiring an extra 8-bit timer or counter.

When timer 0 is in Mode 3, timer 1 can be turned on and off by switching it out of, and into, its own Mode 3, or can still be used by the serial interface as a *Baud Rate Generator*. In fact, it can be used, in any application not requiring an interrupt from timer 1 itself.

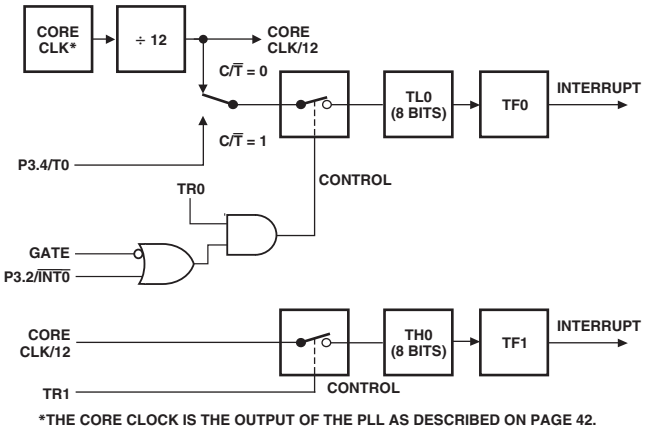

Figure 37. Timer/Counter 0, Mode 3

T2CON **Timer/Counter 2 Control Register**
SFR Address C8H
Power-On Default Value 00H
Bit Addressable Yes

TF2	EXF2	RCLK	TCLK	EXEN2	TR2	CNT2	CAP2

Table XXV. T2CON SFR Bit Designations

Bit	Name	Description
7	TF2	Timer 2 Overflow Flag. *Set* by hardware on a timer 2 overflow. TF2 will not be set when either RCLK or TCLK = 1. *Cleared* by user software.
6	EXF2	Timer 2 External Flag. *Set* by hardware when either a capture or reload is caused by a negative transition on T2EX and EXEN2 = 1. *Cleared* by user user software.
5	RCLK	Receive Clock Enable Bit. *Set* by user to enable the serial port to use timer 2 overflow pulses for its receive clock in serial port Modes 1 and 3. *Cleared* by user to enable timer 1 overflow to be used for the receive clock.
4	TCLK	Transmit Clock Enable Bit. *Set* by user to enable the serial port to use timer 2 overflow pulses for its transmit clock in serial port Modes 1 and 3. *Cleared* by user to enable timer 1 overflow to be used for the transmit clock.
3	EXEN2	Timer 2 External Enable Flag. *Set* by user to enable a capture or reload to occur as a result of a negative transition on T2EX if Timer 2 is not being used to clock the serial port. *Cleared* by user for Timer 2 to ignore events at T2EX.
2	TR2	Timer 2 Start/Stop Control Bit. *Set* by user to start timer 2. *Cleared* by user to stop timer 2.
1	CNT2	Timer 2 timer or counter function select bit. *Set* by user to select counter function (input from external T2 pin). *Cleared* by user to select timer function (input from on-chip core clock).
0	CAP2	Timer 2 Capture/Reload Select Bit. *Set* by user to enable captures on negative transitions at T2EX if EXEN2 = 1. *Cleared* by user to enable auto-reloads with Timer 2 overflows or negative transitions at T2EX when EXEN2 = 1. When either RCLK = 1 or TCLK = 1, this bit is ignored and the timer is forced to autoreload on Timer 2 overflow.

Timer/Counter 2 Data Registers
Timer/Counter 2 also has two pairs of 8-bit data registers associated with it. These are used as both timer data registers and timer capture/reload registers.

TH2 and TL2
Timer 2, data high byte and low byte.
SFR Address = CDhex, CChex respectively.

RCAP2H and RCAP2L
Timer 2, Capture/Reload byte and low byte.
SFR Address = CBhex, CAhex respectively.

Timer/Counter 2 Operating Modes

The following paragraphs describe the operating modes for timer/counter 2. The operating modes are selected by bits in the T2CON SFR as shown in Table XXVI.

Table XXVI. TIMECON SFR Bit Designations

RCLK (or) TCLK	CAP2	TR2	MODE
0	0	1	16-Bit Autoreload
0	1	1	16-Bit Capture
1	X	1	Baud Rate
X	X	0	OFF

16-Bit Autoreload Mode

In 'Autoreload' mode, there are two options, which are selected by bit EXEN2 in T2CON. If EXEN2 = 0, then when Timer 2 rolls over it not only sets TF2 but also causes the Timer 2 registers to be reloaded with the 16-bit value in registers RCAP2L and RCAP2H, which are preset by software. If EXEN2 = 1, then Timer 2 still performs the above, but with the added feature that a 1-to-0 transition at external input T2EX will also trigger the 16-bit reload and set EXF2. The autoreload mode is illustrated in Figure 38 below.

16-Bit Capture Mode

In the 'Capture' mode, there are again two options, which are selected by bit EXEN2 in T2CON. If EXEN2 = 0, then Timer 2 is a 16-bit timer or counter which, upon overflowing, sets bit TF2, the Timer 2 overflow bit, which can be used to generate an interrupt. If EXEN2 = 1, then Timer 2 still performs the above, but a l-to-0 transition on external input T2EX causes the current value in the Timer 2 registers, TL2 and TH2, to be captured into registers RCAP2L and RCAP2H, respectively. In addition, the transition at T2EX causes bit EXF2 in T2CON to be set, and EXF2, like TF2, can generate an interrupt. The Capture Mode is illustrated in Figure 39.

The baud rate generator mode is selected by RCLK = 1 and/or TCLK = 1.

In either case if Timer 2 is being used to generate the baud rate, the TF2 interrupt flag will not occur. Hence Timer 2 interrupts will not occur so they do not have to be disabled. In this mode the EXF2 flag, however, can still cause interrupts and this can be used as a third external interrupt.

Baud rate generation will be described as part of the UART serial port operation in the following pages.

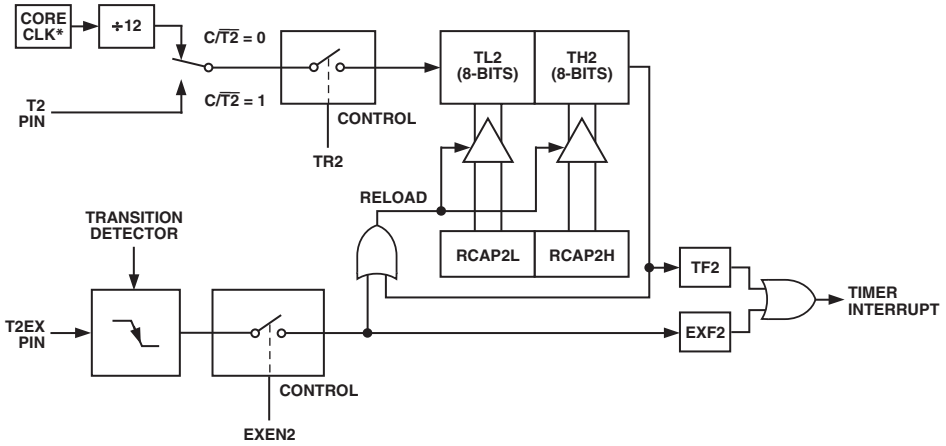

Figure 38. Timer/Counter 2, 16-Bit Autoreload Mode

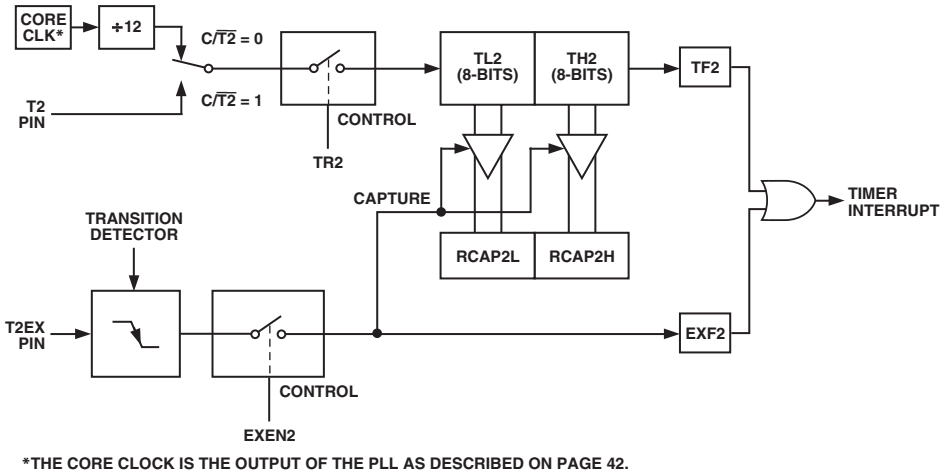

Figure 39. Timer/Counter 2, 16-Bit Capture Mode

UART SERIAL INTERFACE

The serial port is full duplex, meaning it can transmit and receive simultaneously. It is also receive-buffered, meaning it can commence reception of a second byte before a previously received byte has been read from the receive register. However, if the first byte still has not been read by the time reception of the second byte is complete, the first byte will be lost. The physical interface to the serial data network is via Pins RXD(P3.0) and TXD(P3.1) while the SFR interface to the UART is comprised of the following registers.

SBUF

The serial port receive and transmit registers are both accessed through the SBUF SFR (SFR address = 99 hex). Writing to SBUF loads the transmit register and reading SBUF accesses a physically separate receive register.

SCON	**UART Serial Port Control Register**
SFR Address	98H
Power-On Default Value	00H
Bit Addressable	Yes

SM0	SM1	SM2	REN	TB8	RB8	TI	RI

Table XXVII. SCON SFR Bit Designations

Bit	Name	Description
7	SM0	UART Serial Mode Select Bits.
6	SM1	These bits select the Serial Port operating mode as follows: SM0 SM1 Selected Operating Mode 0 0 Mode 0: Shift Register, fixed baud rate (Core_Clk/2) 0 1 Mode 1: 8-bit UART, variable baud rate 1 0 Mode 2: 9-bit UART, fixed baud rate (Core_Clk/64) or (Core_Clk/32) 1 1 Mode 3: 9-bit UART, variable baud rate
5	SM2	Multiprocessor Communication Enable Bit. Enables multiprocessor communication in Modes 2 and 3. In Mode 0, SM2 should be cleared. In Mode 1, if SM2 is set, RI will not be activated if a valid stop bit was not received. If SM2 is cleared, RI will be set as soon as the byte of data has been received. In Modes 2 or 3, if SM2 is set, RI will not be activated if the received ninth data bit in RB8 is 0. If SM2 is cleared, RI will be set as soon as the byte of data has been received.
4	REN	Serial Port Receive Enable Bit. *Set* by user software to enable serial port reception. *Cleared* by user software to disable serial port reception.
3	TB8	Serial Port Transmit (Bit 9). The data loaded into TB8 will be the ninth data bit that will be transmitted in Modes 2 and 3.
2	RB8	Serial port Receiver Bit 9. The ninth data bit received in Modes 2 and 3 is latched into RB8. For Mode 1 the stop bit is latched into RB8.
1	TI	Serial Port Transmit Interrupt Flag. *Set* by hardware at the end of the eighth bit in Mode 0, or at the beginning of the stop bit in Modes 1, 2, and 3. TI must be cleared by user software.
0	RI	Serial Port Receive Interrupt Flag. *Set* by hardware at the end of the eighth bit in mode 0, or halfway through the stop bit in Modes 1, 2, and 3. RI must be cleared by software.

Mode 0: 8-Bit Shift Register Mode

Mode 0 is selected by clearing both the SM0 and SM1 bits in the SFR SCON. Serial data enters and exits through RXD. TXD outputs the shift clock. Eight data bits are transmitted or received. Transmission is initiated by any instruction that writes to SBUF. The data is shifted out of the RXD line. The eight bits are transmitted with the least-significant bit (LSB) first, as shown in Figure 40.

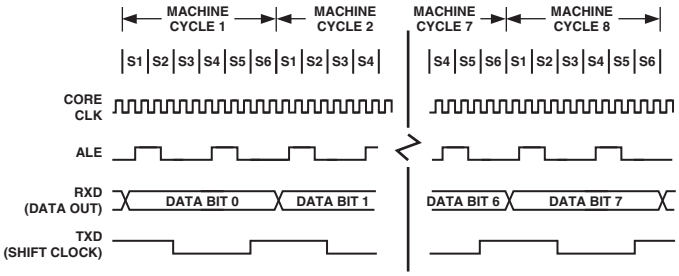

Figure 40. UART Serial Port Transmission, Mode 0.

Reception is initiated when the receive enable bit (REN) is 1 and the receive interrupt bit (RI) is 0. When RI is cleared the data is clocked into the RXD line and the clock pulses are output from the TXD line.

Mode 1: 8-Bit UART, Variable Baud Rate

Mode 1 is selected by clearing SM0 and setting SM1. Each data byte (LSB first) is preceded by a start bit(0) and followed by a stop bit(1). Therefore 10 bits are transmitted on TXD or received on RXD. The baud rate is set by the Timer 1 or Timer 2 overflow rate, or a combination of the two (one for transmission and the other for reception).

Transmission is initiated by writing to SBUF. The 'write to SBUF' signal also loads a 1 (stop bit) into the ninth bit position of the transmit shift register. The data is output bit by bit until the stop bit appears on TXD and the transmit interrupt flag (TI) is automatically set as shown in Figure 41.

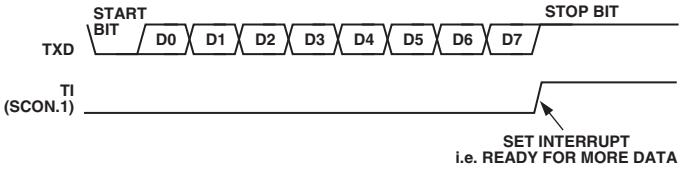

Figure 41. UART Serial Port Transmission, Mode 0.

Reception is initiated when a 1-to-0 transition is detected on RXD. Assuming a valid start bit was detected, character reception continues. The start bit is skipped and the eight data bits are clocked into the serial port shift register. When all eight bits have been clocked in, the following events occur:

The eight bits in the receive shift register are latched into SBUF

The ninth bit (Stop bit) is clocked into RB8 in SCON

The Receiver interrupt flag (RI) is set

if, and only if, the following conditions are met at the time the final shift pulse is generated:

RI = 0, and

Either SM2 = 0, or SM2 = 1 and the received stop bit = 1.

If either of these conditions is not met, the received frame is irretrievably lost, and RI is not set.

Mode 2: 9-Bit UART with Fixed Baud Rate

Mode 2 is selected by setting SM0 and clearing SM1. In this mode the UART operates in 9-bit mode with a fixed baud rate. The baud rate is fixed at Core_Clk/64 by default, although by setting the SMOD bit in PCON, the frequency can be doubled to Core_Clk/32. Eleven bits are transmitted or received, a start bit(0), eight data bits, a programmable ninth bit and a stop bit(1). The ninth bit is most often used as a parity bit, although it can be used for anything, including a ninth data bit if required.

To transmit, the eight data bits must be written into SBUF. The ninth bit must be written to TB8 in SCON. When transmission is initiated the eight data bits (from SBUF) are loaded onto the transmit shift register (LSB first). The contents of TB8 are loaded into the ninth bit position of the transmit shift register. The transmission will start at the next valid baud rate clock. The TI flag is set as soon as the stop bit appears on TXD.

Reception for Mode 2 is similar to that of Mode 1. The eight data bytes are input at RXD (LSB first) and loaded onto the receive shift register. When all eight bits have been clocked in, the following events occur:

The eight bits in the receive shift register are latched into SBUF

The ninth data bit is latched into RB8 in SCON

The Receiver interrupt flag (RI) is set

if, and only if, the following conditions are met at the time the final shift pulse is generated:

RI = 0, and

Either SM2 = 0, or SM2 = 1 and the received stop bit = 1.

If either of these conditions is not met, the received frame is irretrievably lost, and RI is not set.

Mode 3: 9-Bit UART with Variable Baud Rate

Mode 3 is selected by setting both SM0 and SM1. In this mode the 8051 UART serial port operates in 9-bit mode with a variable baud rate determined by either Timer 1 or Timer 2. The operation of the 9-bit UART is the same as for Mode 2 but the baud rate can be varied as for Mode 1.

In all four modes, transmission is initiated by any instruction that uses SBUF as a destination register. Reception is initiated in Mode 0 by the condition RI = 0 and REN = 1. Reception is initiated in the other modes by the incoming start bit if REN = 1.

UART Serial Port Baud Rate Generation

Mode 0 Baud Rate Generation

The baud rate in Mode 0 is fixed:

Mode 0 Baud Rate = (Core Clock Frequency[1]/12)

NOTE

[1]In these descriptions Core Clock Frequency refers to the core clock frequency selected via the CD0–2 bits in the PLLCON SFR.

Mode 2 Baud Rate Generation

The baud rate in Mode 2 depends on the value of the SMOD bit in the PCON SFR. If SMOD = 0, the baud rate is 1/64 of the core clock. If SMOD = 1, the baud rate is 1/32 of the core clock:

Mode 2 Baud Rate = $(2^{SMOD}/64) \times$ (Core Clock Frequency)

Mode 1 and 3 Baud Rate Generation

The baud rates in Modes 1 and 3 are determined by the overflow rate in Timer 1 or Timer 2, or both (one for transmit and the other for receive).

Timer 1 Generated Baud Rates

When Timer 1 is used as the baud rate generator, the baud rates in Modes 1 and 3 are determined by the Timer 1 overflow rate and the value of SMOD as follows:

Modes 1 and 3 Baud Rate = $(2^{SMOD}/32) \times$ (Timer 1 Overflow Rate)

The Timer 1 interrupt should be disabled in this application. The Timer itself can be configured for either timer or counter operation, and in any of its three running modes. In the most typical application, it is configured for timer operation, in the autoreload mode (high nibble of TMOD = 0100Binary). In that case, the baud rate is given by the formula:

Modes 1 and 3 Baud Rate =
$(2^{SMOD}/32) \times$ (Core Clock/(12 × [256-TH1]))

A very low baud rate can also be achieved with Timer 1 by leaving the Timer 1 interrupt enabled, and configuring the timer to run as a 16-bit timer (high nibble of TMOD = 0100Binary), and using the Timer 1 interrupt to do a 16-bit software reload. Table XXVIII below, shows some commonly-used baud rates and how they might be calculated from a core clock frequency of 1.5728 MHz and 12.58 MHz. Generally speaking, a 5% error is tolerable using asynchronous (start/stop) communications.

Table XXVIII. Commonly-Used Baud Rates, Timer 1

Ideal Baud	Core CLK	SMOD Value	TH1-Reload Value	Actual Baud	% Error
9600	12.58	1	–7 (F9h)	9362	2.5
2400	12.58	1	–27 (E5h)	2427	1.1
1200	12.58	1	–55 (C9h)	1192	0.7
1200	1.57	1	–7 (F9h)	1170	2.5

Timer 2 Generated Baud Rates

Baud rates can also be generated using Timer 2. Using Timer 2 is similar to using Timer 1 in that the timer must overflow 16 times before a bit is transmitted/received. Because Timer 2 has a 16-bit autoreload mode a wider range of baud rates is possible using Timer 2.

Modes 1 and 3 Baud Rate = (1/16) × (Timer 2 Overflow Rate)

Therefore, when Timer 2 is used to generate baud rates, the timer increments every two clock cycles and not every core machine cycle as before. Hence, it increments six times faster than Timer 1, and therefore baud rates six times faster are possible. Because Timer 2 has 16-bit autoreload capability, very low baud rates are still possible.

Timer 2 is selected as the baud rate generator by setting the TCLK and/or RCLK in T2CON. The baud rates for transmit and receive can be simultaneously different. Setting RCLK and/or TCLK puts Timer 2 into its baud rate generator mode as shown in Figure 42.

In this case, the baud rate is given by the formula:

Modes 1 and 3 Baud Rate
= (Core Clk)/(32 × [65536 – (RCAP2H, RCAP2L)])

Table XXIX shows some commonly used baud rates and how they might be calculated from a core clock frequency of 1.5728 MHz and 12.5829 MHz.

Table XXIX. Commonly used Baud Rates, Timer 2

Ideal Baud	Core CLK	RCAP2H Value	RCAP2L Value	Actual Baud	% Error
19200	12.58	–1 (FFh)	–20 (ECh)	19661	2.4
9600	12.58	–1 (FFh)	–41 (D7h)	9591	0.1
2400	12.58	–1 (FFh)	–164 (5Ch)	2398	0.1
1200	12.58	–2 (FEh)	–72 (B8h)	1199	0.1
9600	1.57	–1 (FFh)	–5 (FBh)	9830	2.4
2400	1.57	–1 (FFh)	–20 (ECh)	2458	2.4
1200	1.57	–1 (FFh)	–41 (D7h)	1199	0.1

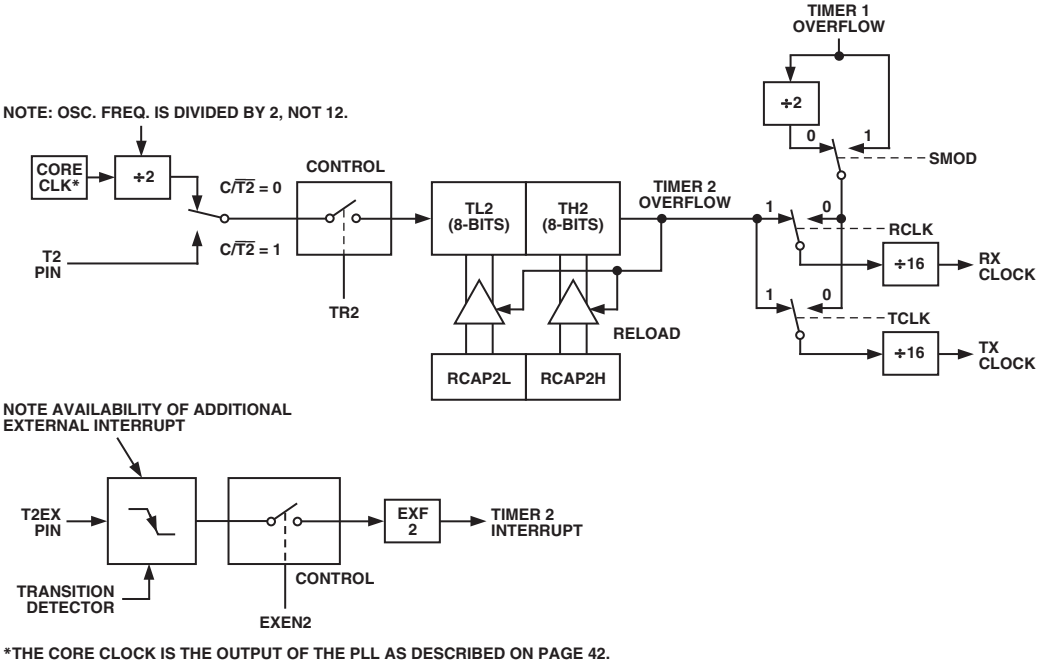

Figure 42. Timer 2, UART Baud Rates

INTERRUPT SYSTEM

The ADuC824 provides a total of twelve interrupt sources with two priority levels. The control and configuration of the interrupt system is carried out through three Interrupt-related SFRs.

IE: Interrupt Enable Register.
IP: Interrupt Priority Register.
IEIP2: Secondary Interrupt Priority-Interrupt Register.

IE: **Interrupt Enable Register**
SFR Address A8H
Power-On Default Value 00H
Bit Addressable Yes

EA	**EADC**	**ET2**	**ES**	**ET1**	**EX1**	**ET0**	**EX0**

Table XXX. IE SFR Bit Designations

Bit	Name	Description
7	EA	Written by User to Enable ‘1’ or Disable ‘0’ All Interrupt Sources
6	EADC	Written by User to Enable ‘1’ or Disable ‘0’ ADC Interrupt
5	ET2	Written by User to Enable ‘1’ or Disable ‘0’ Timer 2 Interrupt
4	ES	Written by User to Enable ‘1’ or Disable ‘0’ UART Serial Port Interrupt
3	ET1	Written by User to Enable ‘1’ or Disable ‘0’ Timer 1 Interrupt
2	EX1	Written by User to Enable ‘1’ or Disable ‘0’ External Interrupt 1
1	ET0	Written by User to Enable ‘1’ or Disable ‘0’ Timer 0 Interrupt
0	EX0	Written by User to Enable ‘1’ or Disable ‘0’ External Interrupt 0

IP: **Interrupt Priority Register**
SFR Address B8H
Power-On Default Value 00H
Bit Addressable Yes

---	**PADC**	**PT2**	**PS**	**PT1**	**PX1**	**PT0**	**PX0**

Table XXXI. IP SFR Bit Designations

Bit	Name	Description
7	---	Reserved for Future Use.
6	PADC	Written by User to Select ADC Interrupt Priority (‘1’ = High; ‘0’ = Low)
5	PT2	Written by User to Select Timer 2 Interrupt Priority (‘1’ = High; ‘0’ = Low)
4	PS	Written by User to Select UART Serial Port Interrupt Priority (‘1’ = High; ‘0’ = Low)
3	PT1	Written by User to Select Timer 1 Interrupt Priority (‘1’ = High; ‘0’ = Low)
2	PX1	Written by User to Select External Interrupt 1 Priority (‘1’ = High; ‘0’ = Low)
1	PT0	Written by User to Select Timer 0 Interrupt Priority (‘1’ = High; ‘0’ = Low)
0	PX0	Written by User to Select External Interrupt 0 Priority (‘1’ = High; ‘0’ = Low)

IEIP2: **Secondary Interrupt Enable and Priority Register**
SFR Address A9H
Power-On Default Value A0H
Bit Addressable No

---	PTI	PPSM	PSI	---	ETI	EPSM	ESI

Table XXXII. IEIP2 SFR Bit Designations

Bit	Name	Description
7	---	Reserved for Future Use.
6	PTI	Written by User to Select TIC Interrupt Priority (‘1’ = High; ‘0’ = Low).
5	PPSM	Written by User to Select Power Supply Monitor Interrupt Priority (‘1’ = High; ‘0’ = Low).
4	PSI	Written by User to Select SPI/I^2C Serial Port Interrupt Priority (‘1’ = High; ‘0’ = Low).
3	---	Reserved, This Bit Must Be ‘0.’
2	ETI	Written by User to Enable ‘1’ or Disable ‘0’ TIC Interrupt.
1	EPSM	Written by User to Enable ‘1’ or Disable ‘0’ Power Supply Monitor Interrupt.
0	ESI	Written by User to Enable ‘1’ or Disable ‘0’ SPI/I^2C Serial Port Interrupt.

Interrupt Priority

The Interrupt Enable registers are written by the user to enable individual interrupt sources, while the Interrupt Priority registers allow the user to select one of two priority levels for each interrupt. An interrupt of a high priority may interrupt the service routine of a low priority interrupt, and if two interrupts of different priority occur at the same time, the higher level interrupt will be serviced first. An interrupt cannot be interrupted by another interrupt of the same priority level. If two interrupts of the same priority level occur simultaneously, a polling sequence is observed as shown in Table XXXIII.

Table XXXIII. Priority within an Interrupt Level

Source	Priority	Description
PSMI	1 (Highest)	Power Supply Monitor Interrupt
WDS	2	Watchdog Interrupt
IE0	3	External Interrupt 0
RDY0/RDY1	4	ADC Interrupt
TF0	5	Timer/Counter 0 Interrupt
IE1	6	External Interrupt 1
TF1	7	Timer/Counter 1 Interrupt
I2CI + ISPI	8	I^2C/SPI Interrupt
RI + TI	9	Serial Interrupt
TF2 + EXF2	10	Timer/Counter 2 Interrupt
TII	11 (Lowest)	Time Interval Counter Interrupt

Interrupt Vectors

When an interrupt occurs the program counter is pushed onto the stack and the corresponding interrupt vector address is loaded into the program counter. The interrupt vector addresses are shown in Table XXXIV.

Table XXXIV. Interrupt Vector Addresses

Source	Vector Address
IE0	0003 Hex
TF0	000B Hex
IE1	0013 Hex
TF1	001B Hex
RI + TI	0023 Hex
TF2 + EXF2	002B Hex
RDY0/RDY1 (ADC)	0033 Hex
II^2C + ISPI	003B Hex
PSMI	0043 Hex
TII	0053 Hex
WDS (WDIR = 1)*	005B Hex

*The watchdog can be configured to generate an interrupt instead of a reset when it times out. This is used for logging errors or to examine the internal status of the microcontroller core to understand, from a software debug point of view, why a watchdog timeout occurred. The watchdog interrupt is slightly different from the normal interrupts in that its priority level is always set to 1 and it is not possible to disable the interrupt via the global disable bit (EA) in the IE SFR. This is done to ensure that the interrupt will always be responded to if a watchdog timeout occurs. The watchdog will only produce an interrupt if the watchdog timeout is greater than zero.

ADuC824 HARDWARE DESIGN CONSIDERATIONS

This section outlines some of the key hardware design considerations that must be addressed when integrating the ADuC824 into any hardware system.

Clock Oscillator

As described earlier, the core clock frequency for the ADuC824 is generated from an on-chip PLL that locks onto a multiple (384 times) of 32.768 kHz. The latter is generated from an internal clock oscillator. To use the internal clock oscillator, connect a 32.768 kHz parallel resonant crystal between XTAL1 and XTAL2 pins (32 and 33) as shown in Figure 43.

As shown in the typical external crystal connection diagram in Figure 44, two internal 12 pF capacitors are provided on-chip. These are connected internally, directly to the XTAL1 and XTAL2 pins and the total input capacitances at both pins is detailed in the specification section of this data sheet. The value of the total load capacitance required for the external crystal should be the value recommended by the crystal manufacturer for use with that specific crystal. In many cases, because of the on-chip capacitors, additional external load capacitors will not be required.

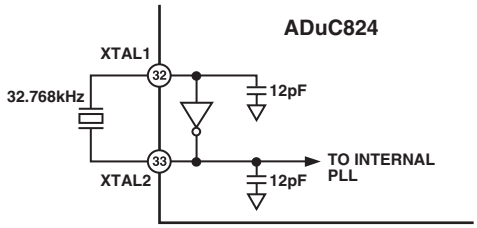

Figure 43. External Parallel Resonant Crystal Connections

External Memory Interface

In addition to its internal program and data memories, the ADuC824 can access up to 64 Kbytes of external program memory (ROM/PROM/etc.) and up to 16 Mbytes of external data memory (SRAM).

To select from which code space (internal or external program memory) to begin executing instructions, tie the $\overline{EA}$ (external access) pin high or low, respectively. When $\overline{EA}$ is high (pulled up to V_{DD}), user program execution will start at address 0 of the internal 8 Kbytes Flash/EE code space. When $\overline{EA}$ is low (tied to ground) user program execution will start at address 0 of the external code space. In either case, addresses above 1FFF hex (8K) are mapped to the external space.

Note that a second very important function of the $\overline{EA}$ pin is described in the Single Pin Emulation Mode section of this data sheet.

External program memory (if used) must be connected to the ADuC824 as illustrated in Figure 44. Note that 16 I/O lines (Ports 0 and 2) are dedicated to bus functions during external program memory fetches. Port 0 (P0) serves as a multiplexed address/data bus. It emits the low byte of the program counter (PCL) as an address, and then goes into a float state awaiting the arrival of the code byte from the program memory. During the time that the low byte of the program counter is valid on P0, the signal ALE (Address Latch Enable) clocks this byte into an address latch. Meanwhile, Port 2 (P2) emits the high byte of the program counter (PCH), then $\overline{PSEN}$ strobes the EPROM and the code byte is read into the ADuC824.

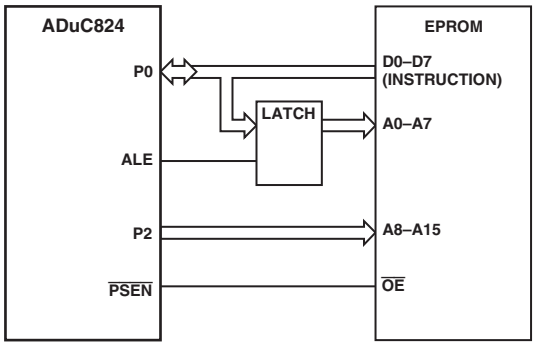

Figure 44. External Program Memory Interface

Note that program memory addresses are always 16 bits wide, even in cases where the actual amount of program memory used is less than 64 Kbytes. External program execution sacrifices two of the 8-bit ports (P0 and P2) to the function of addressing the program memory. While executing from external program memory, Ports 0 and 2 can be used simultaneously for read/write access to external data memory, but not for general-purpose I/O.

Though both external program memory and external data memory are accessed by some of the same pins, the two are completely independent of each other from a software point of view. For example, the chip can read/write external data memory while executing from external program memory.

Figure 45 shows a hardware configuration for accessing up to 64 Kbytes of external RAM. This interface is standard to any 8051 compatible MCU.

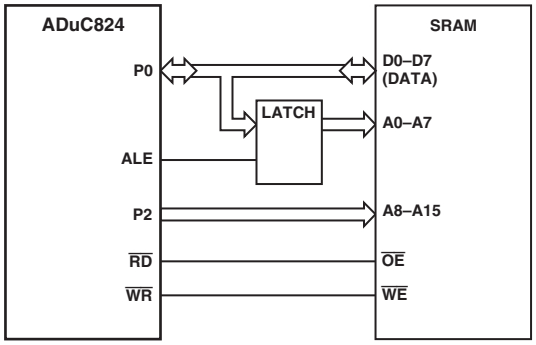

Figure 45. External Data Memory Interface (64 K Address Space)

If access to more than 64 Kbytes of RAM is desired, a feature unique to the ADuC824 allows addressing up to 16 Mbytes of external RAM simply by adding an additional latch as illustrated in Figure 46.

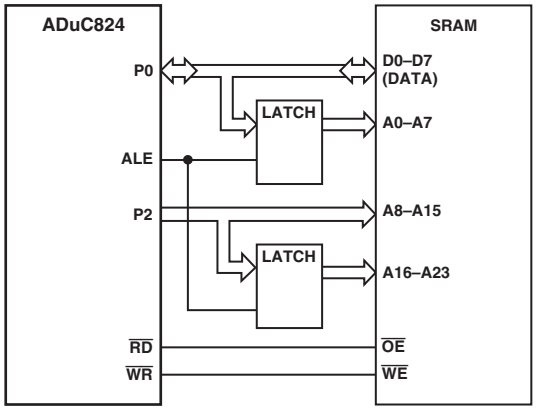

Figure 46. External Data Memory Interface (16 M Bytes Address Space)

In either implementation, Port 0 (P0) serves as a multiplexed address/data bus. It emits the low byte of the data pointer (DPL) as an address, which is latched by a pulse of ALE prior to data being placed on the bus by the ADuC824 (write operation) or the SRAM (read operation). Port 2 (P2) provides the data pointer page byte (DPP) to be latched by ALE, followed by the data pointer high byte (DPH). If no latch is connected to P2, DPP is ignored by the SRAM, and the 8051 standard of 64 Kbyte external data memory access is maintained.

Detailed timing diagrams of external program and data memory read and write access can be found in the timing specification sections of this data sheet.

Power-On Reset Operation

External POR (power-on reset) circuitry must be implemented to drive the RESET pin of the ADuC824. The circuit must hold the RESET pin asserted (high) whenever the power supply (DV_{DD}) is below 2.5 V. Furthermore, V_{DD} must remain above 2.5 V for at least 10 ms before the RESET signal is deasserted (low) by which time the power supply must have reached at least a 2.7 V level. The external POR circuit must be operational down to 1.2 V or less. The timing diagram of Figure 47 illustrates this functionality under three separate events: power-up, brownout, and power-down. Notice that when RESET is asserted (high) it tracks the voltage on DV_{DD}.

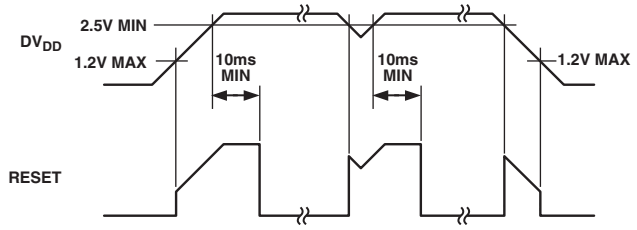

Figure 47. External POR Timing

The best way to implement an external POR function to meet the above requirements involves the use of a dedicated POR chip, such as the ADM809/ADM810 SOT-23 packaged PORs from Analog Devices. Recommended connection diagrams for both active-high ADM810 and active-low ADM809 PORs are shown in Figure 48 and Figure 49 respectively.

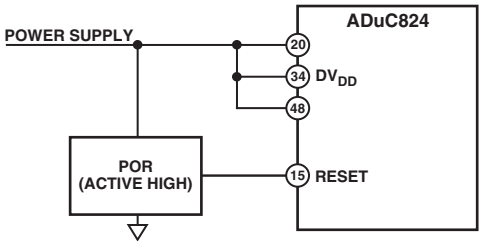

Figure 48. External Active High POR Circuit

Some active-low POR chips, such as the ADM809 can be used with a manual push-button as an additional reset source as illustrated by the dashed line connection in Figure 49.

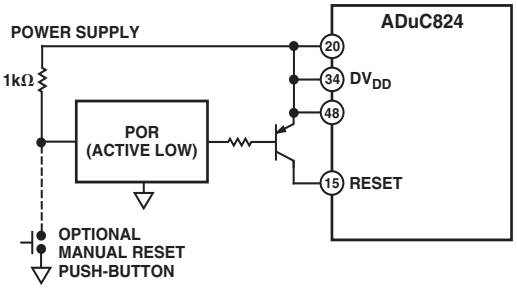

Figure 49. External Active Low POR Circuit

Power Supplies

The ADuC824's operational power supply voltage range is 2.7 V to 5.25 V. Although the guaranteed data sheet specifications are given only for power supplies within 2.7 V to 3.6 V or +5% of the nominal 5 V level, the chip will function equally well at any power supply level between 2.7 V and 5.25 V.

Separate analog and digital power supply pins (AV_{DD} and DV_{DD} respectively) allow AV_{DD} to be kept relatively free of noisy digital signals often present on the system DVDD line. In this mode the part can also operate with split supplies; that is, using different voltage supply levels for each supply. For example, this means that the system can be designed to operate with a DV_{DD} voltage level of 3 V while the AV_{DD} level can be at 5 V or vice-versa if required. A typical split supply configuration is show in Figure 50.

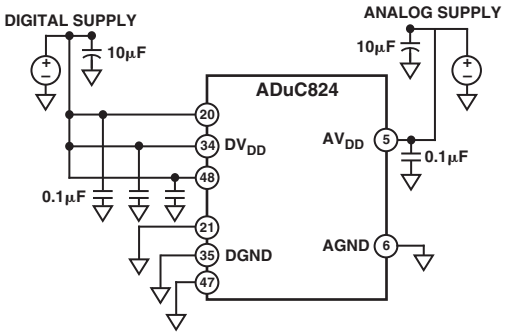

Figure 50. External Dual Supply Connections

As an alternative to providing two separate power supplies, AV_{DD} quiet by placing a small series resistor and/or ferrite bead between it and DV_{DD}, and then decoupling AV_{DD} separately to ground. An example of this configuration is shown in Figure 51. With this configuration other analog circuitry (such as op-amps, voltage reference, etc.) can be powered from the AV_{DD} supply line as well.

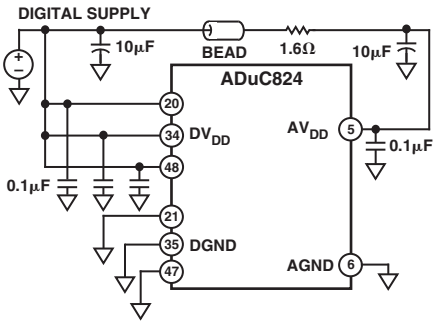

Figure 51. External Single Supply Connections

Notice that in both Figure 50 and Figure 51, a large value (10 µF) reservoir capacitor sits on DV_{DD} and a separate 10 µF capacitor sits on AV_{DD}. Also, local small-value (0.1 µF) capacitors are located at each VDD pin of the chip. As per standard design practice, be sure to include all of these capacitors, and ensure the smaller capacitors are closest to each AV_{DD} pin with trace lengths as short as possible. Connect the ground terminal of each of these capacitors directly to the underlying ground plane. Finally, it should also be noticed that, at all times, the analog and digital ground pins on the ADuC824 should be referenced to the same system ground reference point.

Power Consumption

The "CORE" values given represent the current drawn by DV_{DD}, while the rest ("ADC", and "DAC") are pulled by the AV_{DD} pin and can be disabled in software when not in use. The other on-chip peripherals (watchdog timer, power supply monitor, etc.) consume negligible current and are therefore lumped in with the "CORE" operating current here. Of course, the user must add any currents sourced by the parallel and serial I/O pins, and that sourced by the DAC, in order to determine the total current needed at the ADuC824's supply pins. Also, current draw from the DVDD supply will increase by approximately 5 mA during Flash/EE erase and program cycles

Power-Saving Modes

Setting the Idle and Power-Down Mode bits, PCON.0 and PCON.1 respectively, in the PCON SFR described in Table II, allows the chip to be switched from normal mode into idle mode, and also into full power-down mode.

In idle mode, the oscillator continues to run, but the core clock generated from the PLL is halted. The on-chip peripherals continue to receive the clock, and remain functional. The CPU status is preserved with the stack pointer, program counter, and all other internal registers maintain their data during idle mode. Port pins and DAC output pins also retain their states, and ALE and $\overline{PSEN}$ outputs go high in this mode. The chip will recover from idle mode upon receiving any enabled interrupt, or on receiving a hardware reset.

In power-down mode, both the PLL and the clock to the core are stopped. The on-chip oscillator can be halted or can continue to oscillate depending on the state of the oscillator power-down bit (OSC_PD) in the PLLCON SFR. The TIC, being driven directly from the oscillator, can also be enabled during power-down. All other on-chip peripherals however, are shut down. Port pins retain their logic levels in this mode, but the DAC output goes to a high-impedance state (three-state) while ALE and $\overline{PSEN}$ outputs are held low. During full power-down mode, the ADuC824 consumes a total of 5 µA typically. There are five ways of terminating power-down mode:

Asserting the RESET Pin (#15)

Returns to normal mode all registers are set to their default state and program execution starts at the reset vector once the Reset pin is de-asserted.

Cycling Power

All registers are set to their default state and program execution starts at the reset vector.

Time Interval Counter (TIC) Interrupt

Power-down mode is terminated and the CPU services the TIC interrupt, the RETI at the end of the TIC Interrupt Service Routine will return the core to the instruction after that which enabled power down.

I^2C or SPI Interrupt

Power-down mode is terminated and the CPU services the I^2C/SPI interrupt. The RETI at the end of the ISR will return the core to the instruction after that which enabled power down. It should be noted that the I^2C/SPI power down interrupt enable bit (SERIPD) in the PCON SFR must first be set to allow this mode of operation.

$\overline{INT0}$ Interrupt

Power-down mode is terminated and the CPU services the $\overline{INT0}$ interrupt. The RETI at the end of the ISR will return the core to the instruction after that which enabled power-down. It should be noted that the $\overline{INT0}$ power-down interrupt enable bit (INT0PD) in the PCON SFR must first be set to allow this mode of operation.

Grounding and Board Layout Recommendations

As with all high resolution data converters, special attention must be paid to grounding and PC board layout of ADuC824-based designs in order to achieve optimum performance from the ADCs and DAC.

Although the ADuC824 has separate pins for analog and digital ground (AGND and DGND), the user must not tie these to two separate ground planes unless the two ground planes are connected together very close to the ADuC824, as illustrated in the simplified example of Figure 52a. In systems where digital and analog ground planes are connected together somewhere else (at the system's power supply for example), they cannot be connected again near the ADuC824 since a ground loop would result. In these cases, tie the ADuC824's AGND and DGND pins all to the analog ground plane, as illustrated in Figure 52b. In systems with only one ground plane, ensure that the digital and analog components are physically separated onto separate halves of the board such that digital return currents do not flow near analog circuitry and vice versa. The ADuC824 can then be placed between the digital and analog sections, as illustrated in Figure 52c.

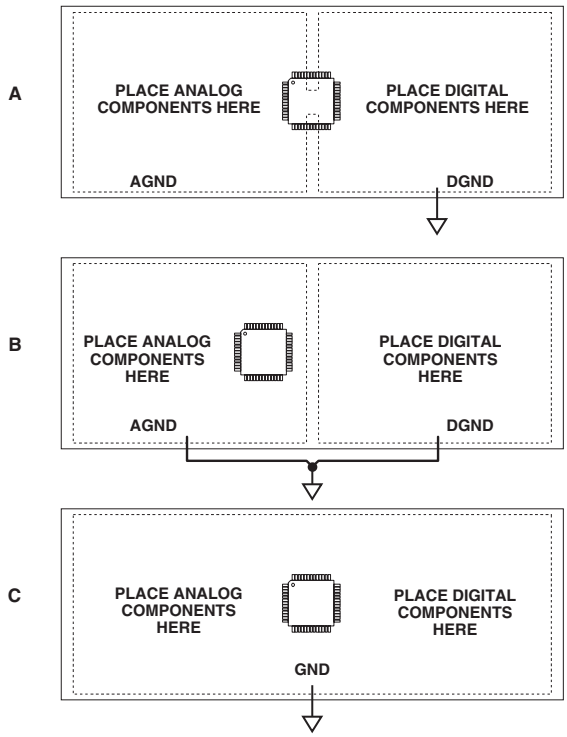

Figure 52. System Grounding Schemes

In all of these scenarios, and in more complicated real-life applications, keep in mind the flow of current from the supplies and back to ground. Make sure the return paths for all currents are as close as possible to the paths the currents took to reach their destinations. For example, do not power components on the analog side of Figure 52b with DV_{DD} since that would force return currents from DV_{DD} to flow through AGND. Also, try to avoid digital currents flowing under analog circuitry, which could happen if the user placed a noisy digital chip on the left half of the board in Figure 52c. Whenever possible, avoid large discontinuities in the ground plane(s) (such as are formed by a long trace on the same layer), since they force return signals to travel a longer path. And of course, make all connections to the ground plane directly, with little or no trace separating the pin from its via to ground.

If the user plans to connect fast logic signals (rise/fall time < 5 ns) to any of the ADuC824's digital inputs, add a series resistor to each relevant line to keep rise and fall times longer than 5 ns at the ADuC824 input pins. A value of 100 Ω or 200 Ω is usually sufficient to prevent high-speed signals from coupling capacitively into the ADuC824 and affecting the accuracy of ADC conversions.

ADuC824 System Self-Identification

In some hardware designs it may be an advantage for the software running on the ADuC824 target to identify the host MicroConverter. For example, code running on the ADuC824 may be used at future date to run on an ADuC816 MicroConverter host and the code may be required to operate differently.

The CHIPID SFR is a read-only register located at SFR address C2 hex. The top nibble of this byte is set to '0' to designate an ADuC824 host. For an ADuC816 host, the CHIPID SFR will contain the value '1' in the upper nibble.

OTHER HARDWARE CONSIDERATIONS

To facilitate in-circuit programming, plus in-circuit debug and emulation options, users will want to implement some simple connection points in their hardware that will allow easy access to download, debug, and emulation modes.

In-Circuit Serial Download Access

Nearly all ADuC824 designs will want to take advantage of the in-circuit reprogrammability of the chip. This is accomplished by a connection to the ADuC824's UART, which requires an external RS-232 chip for level translation if downloading code from a PC. Basic configuration of an RS-232 connection is illustrated in Figure 53 with a simple ADM202-based circuit. If users would rather not design an RS-232 chip onto a board, refer to the application note "uC006–A 4-Wire UART-to-PC Interface"[1] for a simple (and zero-cost-per-board) method of gaining in-circuit serial download access to the ADuC824.

Note
[1]Application note uC006 is available at www.analog.com/microconverter

In addition to the basic UART connections, users will also need a way to trigger the chip into download mode. This is accomplished via a 1 kΩ pull-down resistor that can be jumpered onto the $\overline{PSEN}$ pin, as shown in Figure 53. To get the ADuC824 into download mode, simply connect this jumper and power-cycle the device (or manually reset the device, if a manual reset button is available) and it will be ready to receive a new program serially. With the jumper removed, the device will come up in normal mode (and run the program) whenever power is cycled or RESET is toggled.

Note that $\overline{PSEN}$ is normally an output (as described in the External Memory Interface section) and it is sampled as an input only on the falling edge of RESET (i.e., at power-up or upon an external manual reset). Note also that if any external circuitry unintentionally pulls $\overline{PSEN}$ low during power-up or reset events, it could cause the chip to enter download mode and therefore fail to begin user code execution as it should. To prevent this, ensure that no external signals are capable of pulling the $\overline{PSEN}$ pin low, except for the external $\overline{PSEN}$ jumper itself.

Embedded Serial Port Debugger

From a hardware perspective, entry to serial port debug mode is identical to the serial download entry sequence described above. In fact, both serial download and serial port debug modes can be thought of as essentially one mode of operation used in two different ways.

Note that the serial port debugger is fully contained on the ADuC824 device, (unlike "ROM monitor" type debuggers) and therefore no external memory is needed to enable in-system debug sessions.

Single-Pin Emulation Mode

Also built into the ADuC824 is a dedicated controller for single-pin in-circuit emulation (ICE) using standard production ADuC824 devices. In this mode, emulation access is gained by connection to a single pin, the $\overline{EA}$ pin. Normally, this pin is hardwired either high or low to select execution from internal or external program memory space, as described earlier. To enable single-pin emulation mode, however, users will need to pull the $\overline{EA}$ pin high through a 1 kΩ resistor as shown in Figure 53. The emulator will then connect to the 2-pin header also shown in Figure 53. To be compatible with the standard connector that

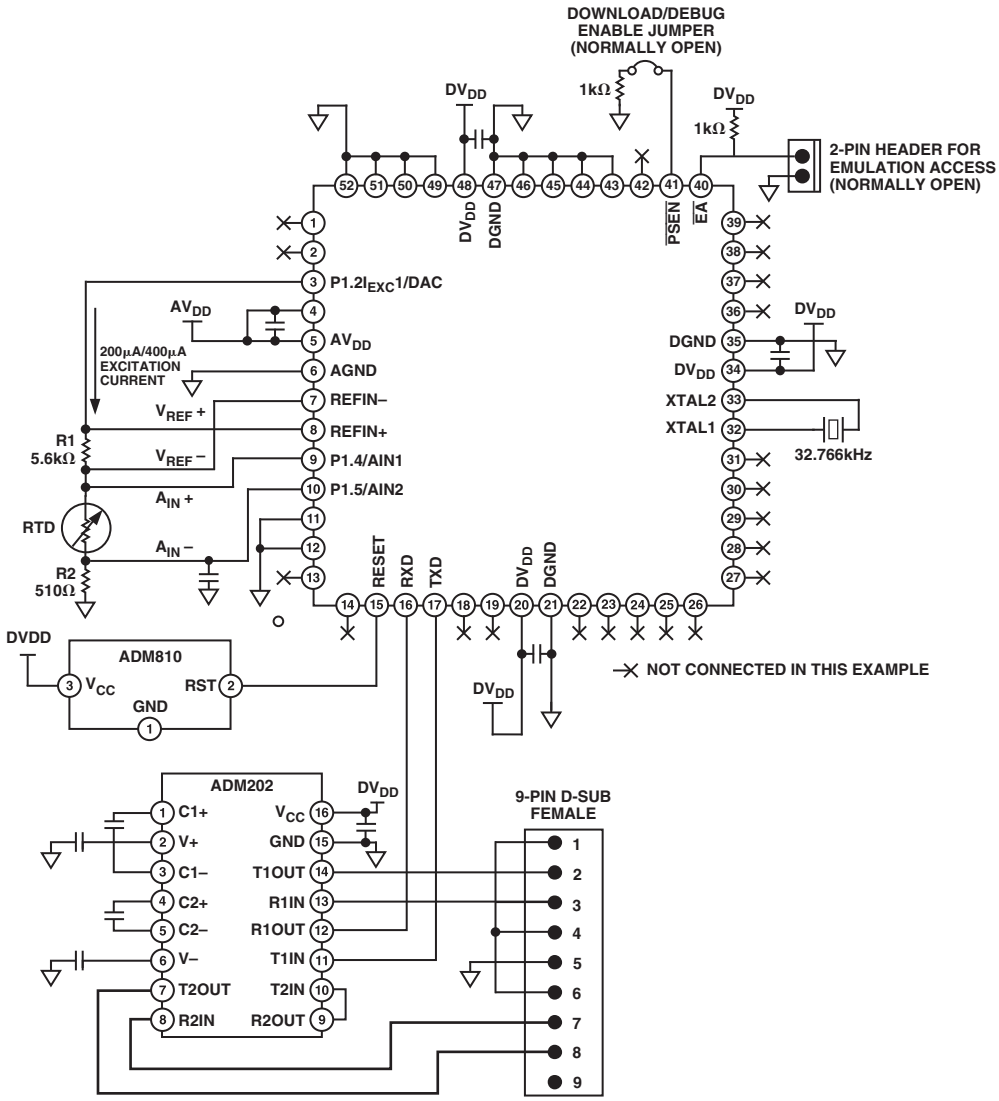

Figure 53. Typical System Configuration

comes with the single-pin emulator available from Accutron Limited (www.accutron.com), use a 2-pin 0.1-inch pitch "Friction Lock" header from Molex (www.molex.com) such as their part number 22-27-2021. Be sure to observe the polarity of this header. As represented in Figure 53, when the Friction Lock tab is at the right, the ground pin should be the lower of the two pins (when viewed from the top).

Enhanced-Hooks Emulation Mode

ADuC824 also supports enhanced-hooks emulation mode. An enhanced-hooks-based emulator is available from Metalink Corporation (www.metaice.com). No special hardware support for these emulators needs to be designed onto the board since these are "pod-style" emulators where users must replace the chip on their board with a header device that the emulator pod plugs into. The only hardware concern is then one of determining if adequate space is available for the emulator pod to fit into the system enclosure.

Typical System Configuration

A typical ADuC824 configuration is shown in Figure 53. It summarizes some of the hardware considerations discussed in the previous paragraphs.

Figure 53 also includes connections for a typical analog measurement application of the ADuC824, namely an interface to an RTD (Resistive Temperature Device). The arrangement shown is commonly referred to as a 4-wire RTD configuration.

Here, the on-chip excitation current sources are enabled to excite the sensor. An external differential reference voltage is generated by the current sourced through resistor R1. This current also flows directly through the RTD, which generates a differential voltage directly proportional to temperature. This differential voltage is routed directly to the positive and negative inputs of the primary ADC (AIN1, AIN2 respectively). A second external resistor, R2, is used to ensure that absolute analog input voltage on the negative input to the primary ADC stays within that specified for the ADuC824, i.e., AGND + 100 mV.

It should also be noted that variations in the excitation current do not affect the measurement system as the input voltage from the RTD and reference voltage across R1 vary ratiometrically with the excitation current. Resistor R1 must, however, have a low temperature coefficient to avoid errors in the reference voltage over temperature.

QUICKSTART DEVELOPMENT SYSTEM

The QuickStart Development System is a full featured, low cost development tool suite supporting the ADuC824. The system consists of the following PC-based (Windows-compatible) hardware and software development tools.

Hardware:	ADuC824 Evaluation Board, Plug-In Power Supply and Serial Port Cable
Code Development:	8051 Assembler C Compiler (2 Kcode Limited)
Code Functionality:	ADSIM, Windows MicroConverter Code Simulator
In-Circuit Code Download:	Serial Downloader
In-Circuit Debugger:	Serial Port Debugger
Misc. Other:	CD-ROM Documentation and Two Additional Prototype Devices

Figures 54 shows the typical components of a QuickStart Development System while Figure 55 shows a typical debug session. A brief description of some of the software tools' components in the QuickStart Development System is given below.

Figure 54. Components of the QuickStart Development System

Download—In-Circuit Serial Downloader

The Serial Downloader is a software program that allows the user to serially download an assembled program (Intel Hex format file) to the on-chip program FLASH memory via the serial COM1 port on a standard PC. An Application Note (uC004) detailing this serial download protocol is available from www.analog.com/microconverter.

DeBug—In-Circuit Debugger

The Debugger is a Windows application that allows the user to debug code execution on silicon using the MicroConverter UART serial port. The debugger provides access to all on-chip peripherals during a typical debug session as well as single-step and break-point code execution control.

ADSIM—Windows Simulator

The Simulator is a Windows application that fully simulates all the MicroConverter functionality including ADC and DAC peripherals. The simulator provides an easy-to-use, intuitive, interface to the MicroConverter functionality and integrates many standard debug features; including multiple breakpoints, single stepping; and code execution trace capability. This tool can be used both as a tutorial guide to the part as well as an efficient way to prove code functionality before moving to a hardware platform.

The QuickStart development tool-suite software is freely available at the Analog Devices MicroConverter Website www.analog.com/microconverter.

Figure. 55. Typical Debug Session

OUTLINE DIMENSIONS

Dimensions shown in inches and (mm).

52-Lead MQFP (S-52)

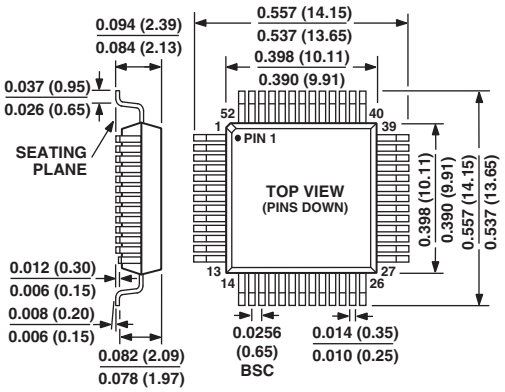

ADuC824–Revision History

Location	Page
Data sheet changed from REV. 0 to REV. A.	
Change to RESET description	19
Change (24-BIT to 16-BIT) in Figure 12	21

C02345–0–3/01 (A)

PRINTED IN U.S.A.