Downloaded from SAE International by Ian Soule, Monday, November 06, 2023

SURFACE VEHICLE RECOMMENDED PRACTICE	J1383™	MAY2018
	Issued 1985-04 Revised 2018-05 Superseding J1383 MAY2010	
(R) Performance Requirements for Motor Vehicle Headlamps		

RATIONALE

Added Table of Contents.

2.1, 2.2 – Revised reference information.

3.4, 3.7, 3.8, 3.10, 3.12, 3.13, 3.17, 3.18, 3.20 – Removed definitions which are currently in SAE J387.

2.2.1 – Added section; moved SAE J387 and SAE J2442 from 2.1.1. Added SAEJ2560, SAE J2650, and SAE J3069 references.

4.2.1 through 4.2.5 – Updated for modern technology and added provisions to ensure legibility.

5. – Clarified test voltage to be used.

5.1.1.1 – Added note for aiming of ADB system types.

Figure 5, Figure 6 – Changes made to improve pedestrian and obstacle detection.

6.8.5.1 – Clarified aim method to be used in the case of a headlamp incorporating ADB.

7.1 – Deleted “glass cover” and substituted “transparent cover” due to common use of other materials, moved to 6.9.

7.4, 7.4.1.3 – replaced “bulbs” with “light sources” due to new technology.

7.5 – Note added for stop-start system performance.

VWGoA EX1065
VWGoA v. Spero
IPR2023-00197

Downloaded from SAE International by Ian Soule, Monday, November 06, 2023

TABLE OF CONTENTS

1. SCOPE 4

2. REFERENCES 4
2.1 Applicable Documents 4
2.1.1 SAE Publications 4
2.2 Related Documents 4
2.2.1 SAE Publications 4
2.2.2 Federal Publications 5
2.2.3 ASTM Publications 5

3. DEFINITIONS 5

4. LIGHTING IDENTIFICATION CODE, MARKINGS AND NOTICES 6
4.1 SAE J759 Lighting Identification Code 6
4.1.1 Replaceable Bulb 6
4.1.2 Integral Beam 6
4.1.3 Combination Headlamp 6
4.2 Headlamp Marking Requirements 6
4.3 Headlamp Aim-Type Code 7
4.3.1 Mechanical Aim Headlamp 7
4.3.2 Visual/Optical Aim Headlamp 9
4.3.3 VHAD Aim Headlamp 9
4.4 Replacement Component Marking 9
4.5 Optical Axis Marking 9

5. TESTS 10
5.1 SAE J575 Tests for Motor Vehicle Lighting Devices and Components 10
5.2 Color Test 11
5.3 Plastic Materials 11
5.4 Aiming Adjustment Test 11
5.5 Aim Range Test 11
5.6 Inward Force Test 11
5.7 Torque Deflection Test 12

6. PERFORMANCE REQUIREMENTS 12
6.1 SAE J575 Test Requirements 12
6.2 Color Requirement 15
6.3 Plastic Materials Requirements 15
6.4 Aiming Adjustment Requirement 15
6.5 Aim Range Requirements 16
6.6 Inward Force Requirements 16
6.7 Torque Deflection Requirement 16
6.8 Headlamp Aim Requirements 16
6.9 Installation Requirements 21

7. GUIDELINES 21
7.1 Headlamp Design Requirements 21
7.2 Fixed Horizontal Aim Guideline 21
7.3 High beam hotspot design guideline 21
7.4 Out-of-Focus Test 21
7.5 Start-Stop 21

8. NOTES 22
8.1 Revision Indicator 22

Downloaded from SAE International by Ian Soule, Monday, November 06, 2023

Figure 1 Dimensional specifications for location of aiming pads on headlamps 7
Figure 2 Detail example of aiming pad 8
Figure 3 Dimensional specifications for location of aiming pads on headlamp units 8
Figure 4 Inward force tester 12
Figure 5 Low beam headlamp photometric requirement luminous intensity (cd) 13
Figure 6 High beam headlamp photometric requirement luminous intensity (cd) 14
Figure 7 "3 line" horizontal aim VOLH2 19
Figure 8 "0.2 D" horizontal aim VORH or VOLH1 20
Figure 9 "0.2 D" horizontal aim VORH or VOLH1 20

Table 1 Dimensional specifications for location of aiming pads on headlamp units 9
Table 2 Combinations of aim mechanisms and aim tolerance allowed 20

Downloaded from SAE International by Ian Soule, Monday, November 06, 2023

1. SCOPE

This SAE Recommended Practice is intended as a guide toward standard practice and is subject to change to keep pace with experience and technical advances. This document establishes performance requirements for headlamps.

2. REFERENCES

2.1 Applicable Documents

The following publications form a part of this specification to the extent specified herein. Unless otherwise indicated, the latest issue of SAE publications shall apply.

2.1.1 SAE Publications

Available from SAE International, 400 Commonwealth Drive, Warrendale, PA 15096-0001, Tel: 877-606-7323 (inside USA and Canada) or +1 724-776-4970 (outside USA), www.sae.org.

SAE J575 Test Methods and Equipment for Lighting Devices for Use on Vehicles Less than 2032 mm in Overall Width

SAE J576 Plastic Material or Materials for Use in Optical Parts Such as Lenses and Reflex Reflectors of Motor Vehicle Lighting Devices

SAE J578 Color Specification

SAE J599 Lighting Inspection Code

SAE J600 Headlamp Aim Test Machines

SAE J602 Headlamp Aiming Device for Mechanically Aimable Headlamp Units

SAE J759 Lighting Identification Code

SAE J2560 Forward Lighting Halogen Bulb Performance Requirements for Motor Vehicles

SAE J2595 Performance Requirements for Sealed Beam Motor Vehicle Headlamps

SAE J2650 Performance Requirements for Light Emitting Diode (LED) Road Illumination Devices

2.2 Related Documents

The following publications are provided for information purposes only and are not a required part of this SAE Technical Report.

2.2.1 SAE Publications

Available from SAE International, 400 Commonwealth Drive, Warrendale, PA 15096-0001, Tel: 877-606-7323 (inside USA and Canada) or +1 724-776-4970 (outside USA), www.sae.org.

SAE J387 Terminology – Motor Vehicle Lighting

SAE J2442 Harmonized Provisions for Installation of Exterior Lamps and Retro-Reflecting Devices on Road Vehicles Except Motorcycles

SAE J2592 Limited Adaptive Forward Lighting System

SAE J2838 Full Adaptive Forward Lighting systems

SAE J3069 Adaptive Driving Beam

Downloaded from SAE International by Ian Soule, Monday, November 06, 2023

2.2.2 Federal Publications

Available from the Superintendent of Documents, U. S. Government Printing Office, Mail Stop: SSOP, Washington, DC 20402-9320 or at: http://www.gpo.gov/fdsys/browse/collectionCfr.action?collectionCode=CFR

CFR Title 49 Part 571.108 Lamps, Reflective Devices and Associated Equipment (FMVSS 108)

2.2.3 ASTM Publications

Available from ASTM International, 100 Barr Harbor Drive, P.O. Box C700, West Conshohocken, PA 19428-2959, Tel: 610-832-9585, www.astm.org.

ASTM E308-85 Standard Method for Computing the Color of Objects by Using the CIE System

3. DEFINITIONS

3.1 HEADLAMP

A lighting device providing a high and/or a low beam designed to provide illumination forward of the vehicle.

3.2 REPLACEABLE LIGHT SOURCE

A light source with related envelope and mounting base which is removable from the headlamp for the purpose of replacement.

3.3 MECHANICALLY AIMABLE HEADLAMP

A headlamp having three pads on the lens, forming an aiming plane or an aiming ring, the aiming plane or aiming ring being used for laboratory photometric testing and for inspecting the aim of the headlamp when installed on the vehicle.

3.4 HEADLAMP OPTICAL AXIS

The line formed by the intersection of a horizontal and a vertical plane through the light source parallel to the longitudinal axis of the vehicle. If the optical axis of the headlamp is not at the geometric center of the lens or multiple light sources are used, then the location will be indicated by the manufacturer on the headlamp.

3.5 SEASONING - FILAMENT BULBS

Process of energizing the filament of a bulb at design voltage for a period of time equal to 1% of design life or 10 h, whichever is shorter

3.6 HEADLAMP TEST FIXTURE

Device specifically designed to support a headlamp in the test position during laboratory testing. Mounting hardware and components shall be representative of those necessary to operate the headlamp in its normal manner.

3.7 VEHICLE HEADLAMP AIMING DEVICE (VHAD)

An aiming device incorporated in the headlamp system which allows for inspection and adjustment of headlamp aim without the use of aim measuring equipment external to the vehicle.

3.8 HIGH BEAM FILAMENT SOURCE(S)

Filament coil designed to provide high beam function.

Downloaded from SAE International by Ian Soule, Monday, November 06, 2023

3.9 LOW BEAM FILAMENT SOURCE(S)

Filament coil designed to provide low beam function.

3.10 AIMING REFERENCE PLANE

A plane which is perpendicular to the longitudinal axis of the vehicle and tangent to the forward most aiming pad on the headlamp or, where such a plane would intersect the surface of the lens between the aiming pads, a plane which is perpendicular to the longitudinal axis of the vehicle and is located forward of and as close to the lens as possible without causing interference.

3.11 VISUALLY/OPTICALLY AIMABLE HEADLAMP

A headlamp which is designed to be visually/optically aimable.

3.12 INTEGRAL BEAM HEADLAMP

A headlamp, other than a standardized sealed beam headlamp or a replaceable bulb headlamp, comprising an integral and indivisible optical assembly including lens, reflector, and light source.

3.13 COMBINATION HEADLAMP

A headlighting system comprised of two different headlamp types, each of which shall be either a sealed beam headlamp, an integral beam headlamp, or a replaceable bulb headlamp.

3.14 REPLACEABLE LIGHT SOURCE HEADLAMP

A headlamp utilizing a replaceable light source(s) to provide illumination.

4. LIGHTING IDENTIFICATION CODE, MARKINGS AND NOTICES

4.1 SAE J759 Lighting Identification Code

4.1.1 Replaceable Bulb

Headlamps meeting the requirements herein for replaceable bulb headlamps shall be identified by the code “HR” in accordance with SAE J759.

4.1.2 Integral Beam

Headlamps meeting the requirements herein for integral beam headlamps shall be identified by the code “HI” in accordance with SAE J759.

4.1.3 Combination Headlamp

Headlamps meeting the requirements herein for combination headlamps shall be identified by the codes of the headlamp types incorporated in the headlamp system in accordance with SAE J759.

4.2 Headlamp Marking Requirements

Headlamps shall be permanently marked with the following markings:

4.2.1 Name and/or trademark of the manufacturer, importer, or vehicle manufacturer shall be readily legible when the headlamp is installed on the vehicle.

4.2.2 Except on sealed beam headlamps, design voltage and replaceable light source type designator(s) shall be readily legible when the headlamp is installed on the vehicle. On sealed beam headlamps, design voltage and part number or trade number shall be readily legible when the sealed beam is installed and/or removed from the vehicle.

Downloaded from SAE International by Ian Soule, Monday, November 06, 2023

4.2.3 Aim markings specified in 4.3 of this document shall be readily legible when the headlamp is installed on the vehicle.

4.2.4 Any markings molded onto the outer surface of the lens shall protrude not more than 0.5 mm from the lens surface.

4.2.5 Letters, numbers, and other symbols in markings shall be not less than 3 mm in height.

4.3 Headlamp Aim-Type Code

4.3.1 Mechanical Aim Headlamp

4.3.1.1 The lens shall have three aiming pads which meet the requirements of Figures 1 to 4, which detail the dimensional specifications for the location of aiming pads on replaceable bulb headlamps. The aiming pads need not be centered at the geometric center of the lens, or on the optical axis. Except as provided in 4.3.1.2, a whole number, which represents the distance in tenths of an inch (i.e., 0.3 inch = 3) from the aiming reference plane to the respective aiming pads which are not in contact with that plane, shall be inscribed adjacent to each respective aiming pad on the lens. The height of these numbers shall be not less than 0.157 inch (4 mm). If there is interference between the plane and the area of the lens between the aiming pads, the whole number represents the distance to a secondary plane. The secondary plane shall be located parallel to the aiming reference plane and as close to the lens as possible without causing interference.

4.3.1.2 If the forward aiming pad is the lower inboard aiming pad, then the dimensions may be placed anywhere on the lens. The dimension for the outboard aiming pad (Dimension F in Table 1) shall be followed by the letter “H” and the dimension for the center aiming pad shall be followed by the letter “V.” The dimensions shall be expressed in tenths of an inch.

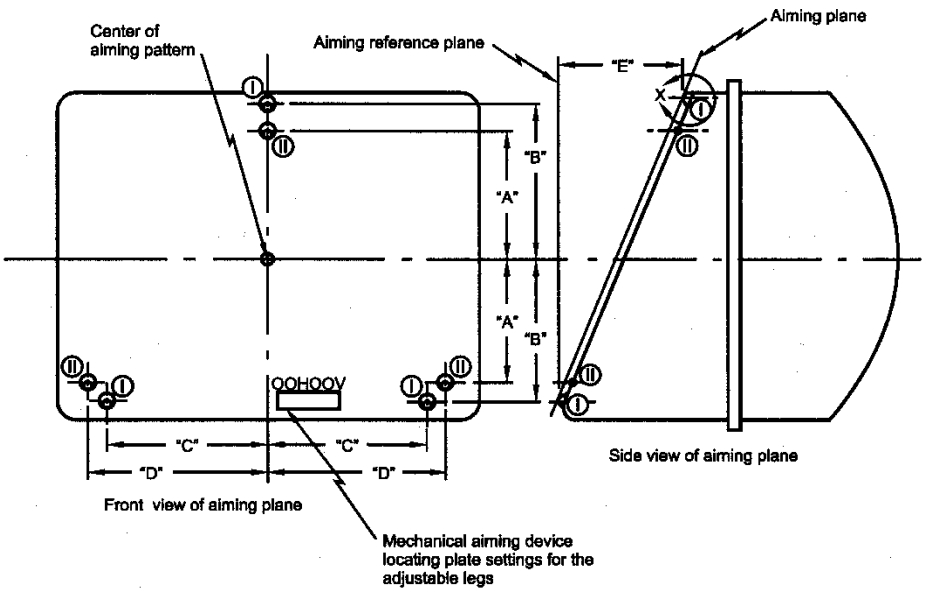

Figure 1 - Dimensional specifications for location of aiming pads on headlamps

Downloaded from SAE International by Ian Soule, Monday, November 06, 2023

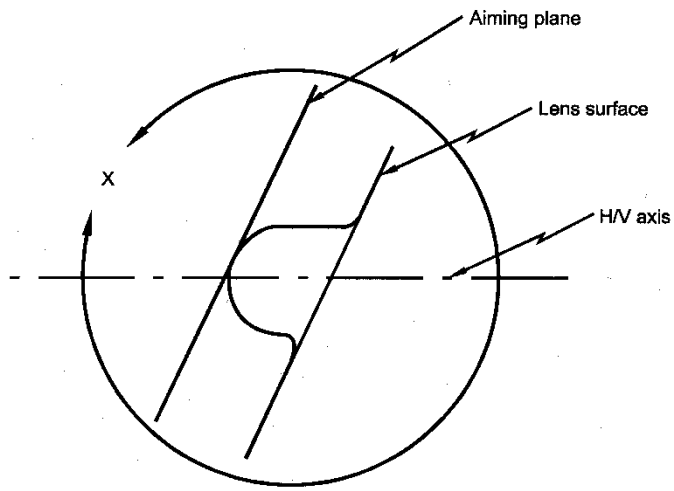

Figure 2 - Detail example of aiming pad

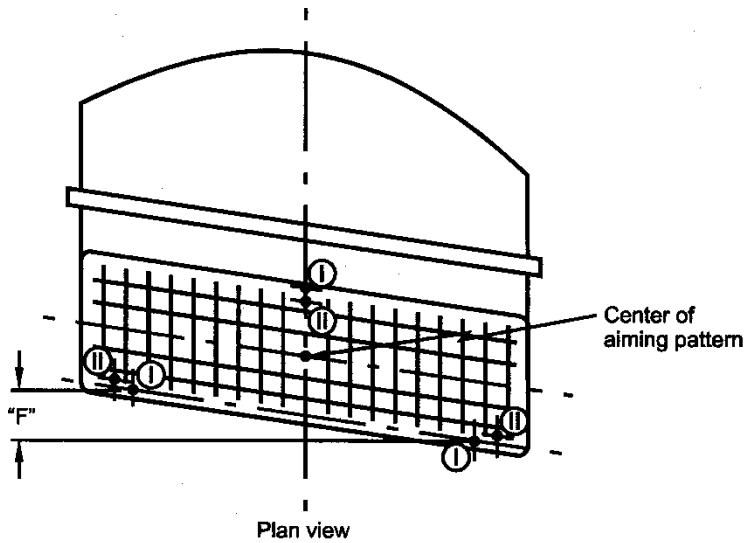

Notes:

- Group I or Group II aiming pad locations may be used.
- Group I aiming pad location (front view) is that prescribed for 2B1 sealed beam units.
- Group II aiming pad location (front view) is that prescribed for 1A1and 2A1 sealed beam units.

Figure 3 - Dimensional specifications for location of aiming pads on headlamp units

Downloaded from SAE International by Ian Soule, Monday, November 06, 2023

Table 1 - Dimensional specifications for location of aiming pads on headlamp units

Dimension	Millimeters	Inches
A	42.16 ± 0.25	1.660 ± 0.010
B	60.05 ± 1.00	2.364 ± 0.039
C	64.0 ± 1.00	2.520 ± 0.039
D	68.58 ± 0.51	2.700 ± 0.020
E	Mechanical aiming device locating plate setting for the vertical adjustable leg. (Millimeters)	
F	Mechanical aiming device locating plate setting for the horizontal adjustable leg. (Millimeters)	

4.3.2 Visual/Optical Aim Headlamp

4.3.2.1 Vertically Aimed Headlamp

4.3.2.1.1 Headlamps intended to be aimed vertically using the left side of the low beam pattern shall be marked “VOL.”

4.3.2.1.2 Headlamps intended to be aimed vertically using the right side of the low beam pattern shall be marked “VOR.”

4.3.2.2 Vertically and Horizontally Aimed Headlamp (see 6.8.5.1.4)

4.3.2.2.1 Headlamps intended to be aimed horizontally using a 0.2D scan and be aimed vertically via the right side of the low beam pattern shall be marked “VORH1.”

4.3.2.2.2 Headlamps intended to be aimed horizontally using a 0.2D scan and be aimed vertically via the left side of the low beam pattern shall be marked “VOLH1.”

4.3.2.2.3 Headlamps intended to be aimed horizontally using a 3-line scan shall be aimed vertically via the left side of the low beam pattern and shall be marked “VOLH2.”

4.3.2.3 High Beam Headlamp

4.3.2.3.1 Headlamps intended to be aimed via the high beam pattern shall be marked “VO.”

4.3.3 VHAD Aim Headlamp

VHAD aim headlamps do not require any aim-type code markings.

4.4 Replacement Component Marking

4.4.1 Replaceable lens headlamps shall have the manufacturer’s name and/or trademark identification permanently marked on the lens and housing. In addition, a replacement component shall be marked with all markings that appear on the original equipment component that it replaces except that the name of the manufacturer may be different. Replacement components must be marked with the name of the manufacturer or importer of the component.

4.5 Optical Axis Marking

To assure proper horizontal and vertical alignment of the aiming screen or optical aiming equipment, the optical axis location shall be indicated. The mark or markings may be on the interior or exterior of the lens or indicated by a mark or central structure on the interior or exterior of the headlamp.

Downloaded from SAE International by Ian Soule, Monday, November 06, 2023

5. TESTS

Test voltage application shall be per SAE J575, 4.1.2.1. The test procedures and test requirements specified in this document were developed emphasizing extreme conditions in the headlamp environment. Separate headlamps shall be used for each test. Unless otherwise indicated, all drain holes, breathing devices or other openings or vents of headlamp units under test shall be in their normal operating condition.

Light Sources - Unless otherwise specified, light sources used in the tests shall be representative of light sources in regular production.

5.1 SAE J575 Tests for Motor Vehicle Lighting Devices and Components

The following tests are applicable with the modifications as indicated.

5.1.1 Photometry

5.1.1.1 Headlamp Photometric Aim

5.1.1.1.1 Mechanically aimable headlamps shall be aimed with the aiming plane at the design angle(s) to the photometer axis and the headlamp optical axis coincident with the photometer axis.

5.1.1.1.2 VHAD aimable headlamps shall be aimed to the zero indication of the VHAD.

5.1.1.1.3 On headlamps with visual/optical aim, photometric tests shall be performed with the aim set vertically by the gradient value as described in 6.8.5.1. Aim is then to be set horizontally by the appropriate means according to the lamp design.

5.1.1.1.3.1 Adjust the horizontal VHAD to “0,” or

5.1.1.1.3.2 Aim the horizontal gradient value if the lamp has a horizontal adjustment mechanism without a VHAD, or

5.1.1.1.3.3 Mount the headlamp assembly to the test fixture in its design mounting position in the vehicle if it does not have a horizontal adjustment mechanism.

5.1.1.1.3.4 If the system provides ADB according to SAE J3069, aim according to the instructions provided by the manufacturer

5.1.2 Vibration Test

5.1.3 Humidity

5.1.4 Dust Test – Integral beam headlamps are not subject to this test.

The headlamp shall be seasoned and photometered to the test points in Figure 5 and/or Figure 6 as applicable before and after the dust test. If no dust is visible inside the headlamp after the dust test, the headlamp does not need to be photometered after the dust test.

5.1.5 Corrosion Test

5.1.6 Corrosion Resistance of Reflectors of Replaceable Lens Headlamps

5.1.7 Chemical Resistance Test

5.1.8 Chemical Resistance of Reflectors of Replaceable Lens Headlamps

5.1.9 Thermal Cycle Test

5.1.10 Internal Heat Test

Downloaded from SAE International by Ian Soule, Monday, November 06, 2023

5.1.11 Impact Test

5.1.12 Abrasion Test of Plastic Headlamp Lens Material

5.2 Color Test

SAE J578 is a part of this report.

5.3 Plastic Materials

SAE J576 is a part of this report except for Luminous Transmittance Test.

5.4 Aiming Adjustment Test

5.4.1 When making the aiming adjustment test, an accurate measurement technique shall be used. This may consist of:

5.4.1.1 Attaching a device such as a spot projector to the headlamp, or

5.4.1.2 Replacing the replaceable bulb with a mirror along with a separate light source, or

5.4.1.3 Other equally accurate means.

5.4.2 When conducting the test, the headlamp shall be mounted initially in the design position with the unit at nominal aim (0,0).

5.4.3 The vertical aiming screw shall be turned to the upper and lower extremes of its range as defined in 6.4 and the vertical angle between the mechanical and H-V axes shall be measured in each position. Any change in horizontal angle throughout the vertical aim range shall also be recorded.

5.4.4 The horizontal aiming screw shall be turned to the left and right extremes of its range as defined in 6.4 and the horizontal angle between the mechanical and H-V axes shall be measured in each position. Any change in vertical angle throughout the horizontal aim range shall also be recorded.

5.5 Aim Range Test

For headlamps aimed by moving the reflector relative to the lens and headlamp housing or vice versa.

5.5.1 Test the photometry per 5.1.1 with the lens at any position relative to the reflector within the range limits as specified in 6.4.

5.6 Inward Force Test

For mechanically aimable headlamps.

The headlamp assembly, including the aiming adjusters, shall be subjected to an inward force of 222 N directed normal to the headlamp aiming plane and symmetrically about the center of the headlamp assembly face (Figure 4).

Downloaded from SAE International by Ian Soule, Monday, November 06, 2023

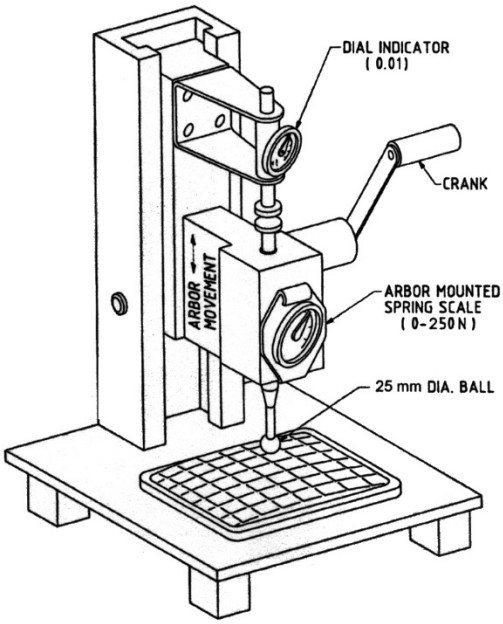

Figure 4 - Inward force tester

5.7 Torque Deflection Test

For mechanically aimable headlamps.

5.7.1 The headlamp assembly to be tested shall be mounted in design vehicle position and set at nominal aim (0,0).

5.7.2 Replaceable bulb headlamps shall be equipped with an appropriate fixture which mates to one of the deflectors shown in SAE J2595 on the face of the lens with an applied torque of 222 N acting parallel to the aiming reference plane and in a downward direction. The force shall be applied through the aiming pads.

5.7.3 The torque shall be applied to the headlamp assembly through the deflectometer and a reading on the thumbwheel shall be taken. The torque shall then be removed and a second reading on the thumbwheel shall be taken.

6. PERFORMANCE REQUIREMENTS

A headlamp, when tested in accordance with the test procedures specified in Section 5, shall meet the following requirements:

6.1 SAE J575 Test Requirements

6.1.1 Photometric Performance Requirement

Headlamps shall be designed to conform to the photometric requirements of Figures 5 and 6.

Downloaded from SAE International by Ian Soule, Monday, November 06, 2023

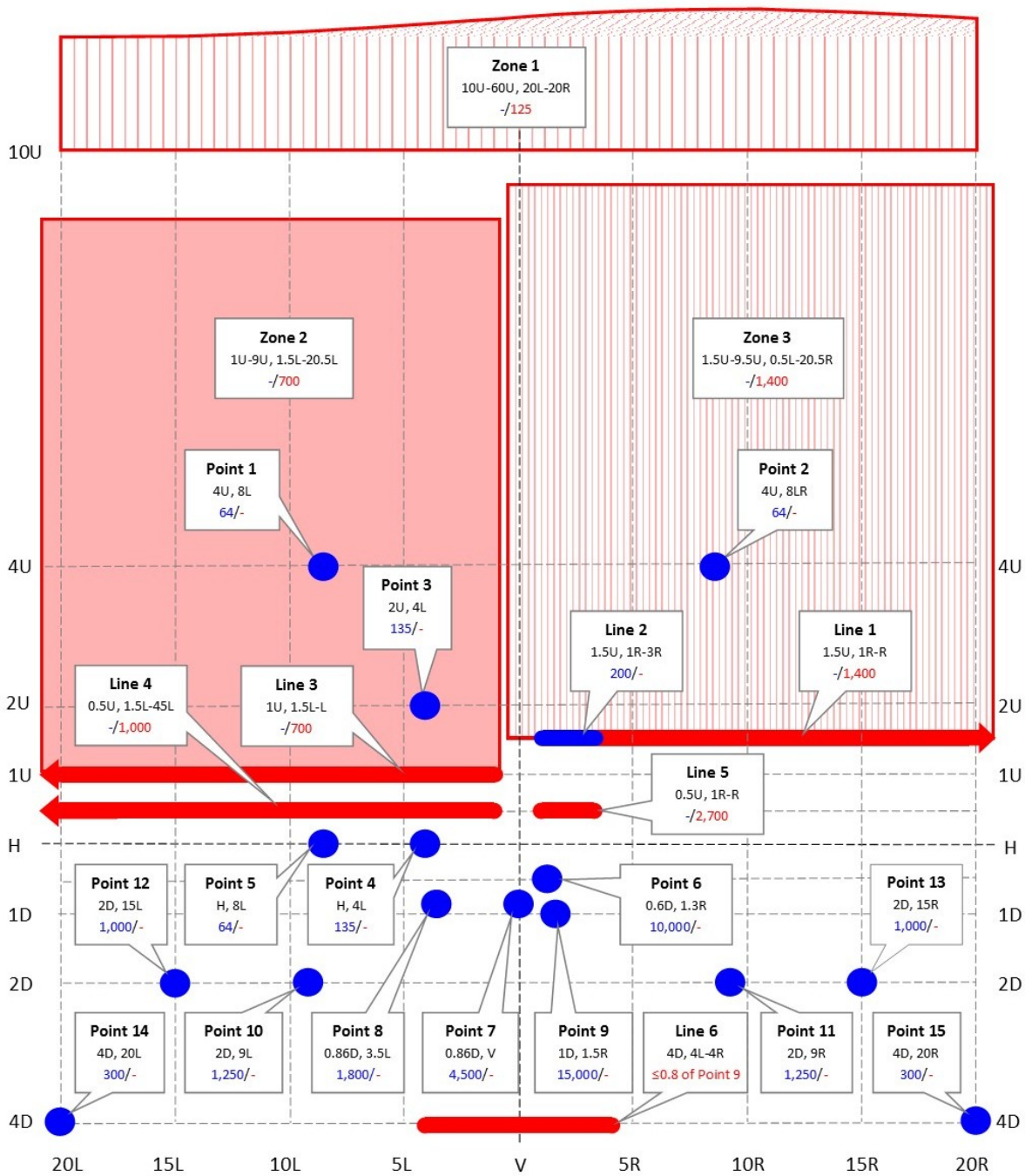

1. A tolerance of ±0.25 degrees in location is allowed at any test point or line except as noted in the footnotes below.
2. Zone 1 shall be photometrically tested in 1 degree increments from 20 degrees left to 20 degrees right and 10 degrees up to 60 degrees up forming a grid of points totaling 2,091 test points. The photometric values measured at each increment shall be recorded. Photometric values at each increment (test point) that exceed 125 cd are permissible provided that no more than 105 test points (5% of the total test points) exceed 125 cd and none of these test points shall exceed 550cd. Note: 0.25 degree re-aim is not permitted at test points for this test.
3. Zone 2 shall be photometrically tested in 1 degree increments from 20.5 degrees left to 1.5 degrees left and 1 degree up to 9 degrees up forming a grid of points totaling 180 test points. The photometric values measured at each increment shall be recorded. Photometric values at each increment (test point) that exceed 700 cd are permissible provided that no more than 18 test points (10% of the total test points) exceed 700 cd and no test points shall exceed 1,000 cd. Note: 0.25 degree re-aim is not permitted at test points for this test.
4. Zone 3 shall be photometrically tested in 1 degree increments from 0.5 degrees left to 20.5 degrees right and 1.5 degrees up to 9.5 degrees up forming a grid of points totaling 189 test points. The photometric values measured at each increment shall be recorded. Photometric values at each increment (test point) that exceed 1,400 cd are permissible provided that no more than 19 test points (10% of the total test points) exceed 1,400 cd and no test points shall exceed 2,000 cd. Note: 0.25 degree re-aim is not permitted at test points for this test.

Figure 5 - Low beam headlamp photometric requirement luminous intensity (cd)

Downloaded from SAE International by Ian Soule, Monday, November 06, 2023

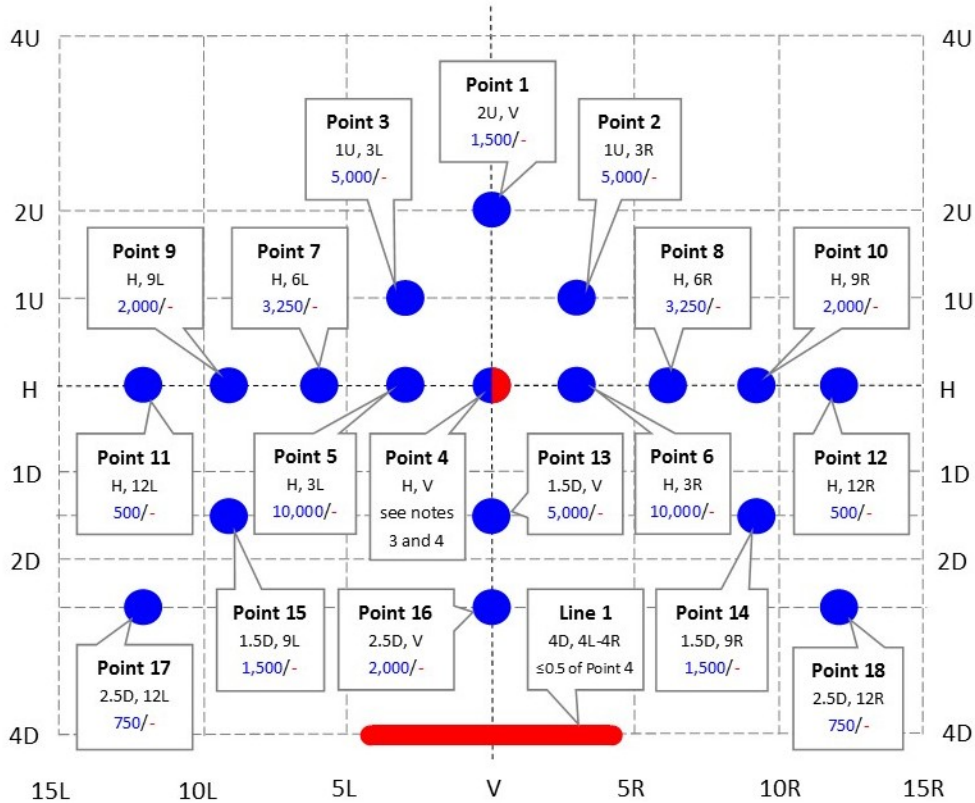

1. A tolerance of ±0.25 degrees in location is allowed at any test point or line.
2. The peak intensity is the maximum candela value found anywhere in the beam pattern.
3. The intensity at Point 4 shall be equal to or greater than 80% of the peak intensity.
4. The peak intensity anywhere in the beam shall be ≥40,000 cd; the maximum intensity H (horizontal) and above shall be 215,000 cd.

Figure 6 - High beam headlamp photometric requirement luminous intensity (cd)

6.1.1.1 In Figures 5 and 6, the minimum photometric requirements, in cd, are shown on the left of each text box describing the Point, Line or Zone and the maximum photometric requirements, in cd, are shown on the right of each text box describing the Point, Line or Zone separated by '/'. Where there is a dash (-), it signifies there is no requirement. Each text box for Points, Lines and Zones gives the location of the Point, Line, or Zone as well. For example, Point 1 in Figure 5 describes a Point located at 4 degrees Up and 8 degrees Left with a minimum photometric requirement of 64 cd and no maximum photometric requirement.

6.1.1.2 A tolerance of 0.25 degrees is permitted during photometric tests for Low Beam and High Beam at any test point or line except as noted in the footnotes for Figure 5.

6.1.1.3 The peak intensity for the High Beam is the maximum candela value found anywhere in the beam pattern.

6.1.1.4 The intensity at Point 4 in Figure 6 (High Beam) shall be equal to or greater than 80% of the peak intensity.

6.1.2 Vibration Requirement

6.1.3 Humidity Performance Requirement

6.1.4 Dust Requirement

6.1.5 Corrosion Requirement

Downloaded from SAE International by Ian Soule, Monday, November 06, 2023

6.1.6 Corrosion Resistance of Reflectors of Replaceable Lens Headlamps Requirements

6.1.7 Chemical Resistance Requirement

6.1.8 Chemical Resistance of Reflectors of Replaceable Lens Headlamps Requirements

6.1.9 Thermal Cycle Requirement

6.1.10 Internal Heat Requirement

6.1.11 Impact Requirement

6.1.12 Abrasion of Plastic Headlamp Lens Material Requirements

6.2 Color Requirement

The color of the emanating light produced by a headlamp shall be white per SAE J578.

6.3 Plastic Materials Requirements

Headlamps shall meet the material requirements of SAE J576, except Luminous Transmittance.

6.4 Aiming Adjustment Requirement

When tested in accordance with 5.4, the headlamp shall meet the following requirements:

6.4.1 When a headlamp system is tested in a laboratory, the range of its vertical aim shall not be less than ±4.0 degrees in the vertical plane from the nominal correct aim position or the full range of pitch of the vehicle on which the headlamp system is installed [from empty to full rated Gross Vehicle Weight].

6.4.2 A minimum aiming adjustment of ±2.5 degrees from the nominal correct aim position shall be provided in the horizontal plane for headlamp assemblies that have a horizontal adjuster.

6.4.3 When tested in the laboratory, adjustment of one aim axis through its full on-vehicle range (specified in 6.4.1 and 6.4.2) shall not cause the aim of the other axis to deviate more than ±0.76 degrees.

6.4.3.1 If the aim mechanism does not meet the requirements of 6.4.3, a cautionary label shall be placed adjacent to the mechanism stating the caution and including either the reason for the caution or the corrective action necessary. Each such label shall also refer the reader to the vehicle operator's manual for complete instructions. Each such vehicle shall be equipped with an operator's manual containing the complete instructions appropriate for the mechanism installed.

6.4.4 On headlamps with a vertical VHAD tested in the laboratory, the headlamp shall be able to indicate variations in vertical aim within a range extending from 1.2 degrees above to at least 1.2 degrees below a longitudinal horizontal plane through the center of the headlamp system.

6.4.5 On headlamps with a horizontal VHAD tested in the laboratory, the headlamp shall be able to indicate variations in horizontal aim within a range extending from 0.76 degrees left to at least 0.76 degrees right of a longitudinal vertical plane through the center of the headlamp system.

6.4.6 The self-locking devices used to hold aiming screws in position shall continue to operate satisfactorily for a minimum of 20 adjustments on each screw, over a length of screw thread of not less than 3 mm.

6.4.6.1 When a headlamp system is installed on a motor vehicle, it shall be aimable with at least one of the following: An externally applied aiming device, an on-vehicle headlamp aiming device (VHAD) installed by the vehicle or lamp manufacturer, or by visual/optical means.

NOTE: Paragraphs 6.4.3, 6.4.4 and 6.4.5 are not applicable to headlamps with ball and socket or equivalent adjusting means.

Downloaded from SAE International by Ian Soule, Monday, November 06, 2023

6.5 Aim Range Requirements

Headlamps shall be designed to conform to the photometric requirements of Figure 5 and/or Figure 6 as applicable when tested within the limits defined in 6.4.

6.6 Inward Force Requirements

When subjected to the tests in 5.6, the headlamp shall meet the following requirements:

6.6.1 The headlamp shall not permanently recede by more than 2.5 mm.

6.6.2 The aim of the headlamp shall not permanently deviate in any direction by more than 32 mm at a distance of 7.6 m (equivalent to 0.25 degree).

6.7 Torque Deflection Requirement

When subjected to the tests in 5.7, the difference between the two readings shall not exceed 0.30 degree.

6.8 Headlamp Aim Requirements

6.8.1 Dimensions for Mechanical Aiming of Headlamps

Headlamps shall meet the following requirements to assure compatibility with mechanical aimers.

6.8.1.1 Aiming pad design may vary but shall meet the limiting dimensions as shown in Figures 1 to 4.

6.8.1.2 Except as provided in 6.8.1.4, a whole number, which represents the distance in tenths of an inch (i.e., 0.3 inch = 3) from the aiming reference plane to the respective aiming pads which are not in contact with that plane, shall be inscribed adjacent to each respective aiming pad on the lens.

6.8.1.3 The height of these numbers shall not be less than 4 mm.

6.8.1.4 If the most forward aiming pad is the lower inboard aiming pad, then the numbers may be placed anywhere on the lens.

6.8.1.5 The number for the outboard aiming pad shall be followed by the letter “H” and the number for the center aiming pad shall be followed by the letter “V.”

6.8.2 Headlamps when mounted on a vehicle shall meet the aimer compatibility requirements described in 6.8.3, or the Vehicle Headlamp Aiming Device (VHAD) requirements described in 6.8.4, or the Visual/Optical Aim requirements described in 6.8.5.

6.8.3 Aimer Compatibility

Mechanically aimable headlamps shall be designed and installed so that they may be inspected and aimed by mechanical aimers as specified in SAE J602 without the removal of any ornamental trim rings or other parts.

6.8.4 A Vehicle Headlamp Aim Device (VHAD) shall meet the requirements specified as follows:

6.8.4.1 Aim

The VHAD shall provide for headlamp aim inspection and adjustment in the vertical and/or horizontal directions.

6.8.4.2 Vertical Aim

The VHAD shall include the necessary references and scales relative to the horizontal plane to assure correct vertical aim for photometry and on-vehicle usage. An off-vehicle measurement of the angle of the plane of the ground is permitted. In addition, an equal number of graduations from the “0” position representing angular changes in the axis in the upward and downward directions shall be provided. The “0” position shall be marked “0” and shall be accurate to within ±0.1 degree.

Downloaded from SAE International by Ian Soule, Monday, November 06, 2023

6.8.4.2.1 Each graduation shall represent a change in the vertical angle not larger than 0.19 degree. Graduations shall provide for variations in aim at least 1.2 degrees above and below the horizontal axis. For each graduation, the angle indicated by the mark or number shall be accurate to within ±0.1 degree of the actual angle between the mark and the horizontal axis.

6.8.4.2.2 Graduations on the VHAD scale shall be spaced a minimum of 1.27 mm (0.05 inch) apart. If a direct reading analog indicator is provided, it shall represent the actual aim movement in a clear, understandable format.

6.8.4.2.3 The graduations shall be legible at a distance of 0.3 m under an illumination of 30 fc maximum, measured at the top of the radiator, by an observer having 20/20 vision (Snellen).

6.8.4.3 Horizontal Aim

The VHAD shall include references and scales relative to the longitudinal axis of the vehicle necessary to assure correct horizontal aim for photometry and on-vehicle usage. A mark shall be used to indicate alignment of the headlamps relative to the longitudinal axis of the vehicle. The mark shall consist of the symbol “0” and shall be accurate to within ±0.2 degree. In addition, an equal number of graduations representing equal angular changes in the leftward and rightward directions relative to the vehicle longitudinal axis shall be provided.

6.8.4.3.1 Each graduation shall represent a change in the horizontal angle not greater than 0.38 degree to the left and right of the longitudinal axis of the vehicle and shall have an accuracy relative to the zero mark of equal to or better than ±0.1 degree.

6.8.4.3.2 The graduations shall be legible at a distance of 0.3 m under an illumination of 30 fc maximum, measured at the top of the radiator, by an observer having 20/20 vision (Snellen).

6.8.4.3.3 The horizontal indicator shall perform through a minimum range of 0.76 degrees left and right; however, the indicator itself shall be capable of recalibration over an angular range of ±2.5 degrees relative to the longitudinal axis of the vehicle to accommodate any adjustment necessary for recalibrating the indicator.

6.8.5 Visual Optical Aim lamps shall meet requirements as follows:

6.8.5.1 Visual/Optical Aiming

Each visually/optically aimable headlamp shall be designed to conform to the following requirements (except when it is combined with ADB according to SAE J3069 where the aiming instructions as provided by the manufacturer shall be followed):

6.8.5.1.1 Vertical aim, low beam. Each low beam headlamp, designed to be visually/optically aimed, shall have a horizontal cutoff in the beam pattern. It may be either on the left side or on the right side of a vertical line through the optical axis. The minimum gradient of the cutoff shall be not less than 0.13 when measured as described in 6.8.5.1.3.

6.8.5.1.1.1 For a headlamp designed with the cutoff on the left side of the vertical line, the headlamp shall be aimed vertically so that the cutoff on the left side shall be positioned at 0.4 degree down from the H-H line when the cutoff is measured at 2.5°L of the vertical.

6.8.5.1.1.2 For a headlamp designed with the cutoff on the right side of the vertical line, the headlamp shall be aimed vertically so that the cutoff on the right side shall be positioned at the H-H line when the cutoff is measured at 2.0°R of the vertical.

6.8.5.1.1.3 The horizontal width of the cutoff used for vertical aim shall be not less than 2 degrees, with not less than 2 degrees of its actual width centered at either 2.5°L or 2.0°R. The vertical location of the highest gradient at the ends of the minimum width shall be within ±0.2 degree of the vertical location of the maximum gradient measured at the appropriate vertical line (at either 2.5°L for a left side cutoff or 2.0°R for a right-side cutoff).

Downloaded from SAE International by Ian Soule, Monday, November 06, 2023

6.8.5.1.2 Horizontal Aim, Low Beam

There shall be no adjustment of the horizontal aim unless the lamp is equipped with a horizontal VHAD meeting the requirements of 6.8.4.3 or unless the lamp meets the requirements of Visual/Optical Horizontal Aim in 6.8.5.1.2.1.

6.8.5.1.2.1 Each low beam headlamp that is equipped with a horizontal adjuster and no VHAD shall have a vertical or angled cutoff in the beam pattern. The manufacturer may specify one of 2 horizontal aim methods. If the “3 line” method (Figure 7) is used, 3 vertical lines shall be scanned at 1R, 2R, and 3R after the lamp is aimed vertically. The maximum gradient found on the 2R line shall be not less than 0.08. If the “0.2D line” method (Figures 9 and 10) is used, a single horizontal line shall be scanned. The maximum gradient found on the 0.2D line shall be not less than 0.08. The scan shall be performed as described in 6.8.5.1.4 and shall be positioned as described in 6.8.5.1.5.

6.8.5.1.3 To measure the low beam vertical aim cutoff parameter, the headlamp shall be mounted on a fixture which simulates its actual design location on a vehicle. The fixture shall be attached to the goniometer table such that the fixture alignment axes are coincident with the goniometer axes. The headlamp shall be energized at the specified photometric test voltage.

The headlamp beam pattern shall then be aimed with the cutoff at the H-H axis if the cutoff is to the right of the vertical and with the cutoff at 0.4 degree below the H-H axis if the cutoff to the left of the vertical. If there is a horizontal VHAD it shall be adjusted to zero. If the headlamp is designed with Visual/Optical Horizontal aim, the horizontal position shall be adjusted to position the beam pattern close to the final aim position.

A vertical scan of the beam pattern shall be conducted for a headlamp with a left side gradient by aligning the goniometer on a vertical line at 2.5°L and scanning from 1.5°U to 1.5°D. For a headlamp with a right side gradient, a vertical scan of the beam pattern shall be conducted by aligning the goniometer on a vertical line at 2.0°R and scanning from 1.5°U to 1.5°D. Determine the maximum gradient within the range of the scan by using the formula:

$$G = \log E(a) - \log E(a+0.1) \qquad \text{(Eq. 1)}$$

where:

G = gradient

E = illumination

a = vertical angular position

The maximum value of the gradient "G" determines the vertical angular location of the cutoff. Perform vertical scans at 1.0 degree left and right of the measurement point of the maximum gradient to determine the inclination.

6.8.5.1.4 To measure the low beam horizontal aim cutoff parameter, the headlamp shall be mounted on a fixture which simulates its actual design location on a vehicle. The fixture shall be attached to the goniometer table such that the fixture alignment axes are coincident with the goniometer axes. The headlamp shall be energized at the specified test voltage.

The headlamp beam pattern shall then be aimed vertically per 6.8.5.1.1 with the horizontal aim reference at the V-V axis.

Downloaded from SAE International by Ian Soule, Monday, November 06, 2023

When using the "3 line" method (Figure 7), 3 vertical lines shall be scanned from 2°U to 2°D at 1R, 2R, and 3R after the lamp is aimed vertically. Determine the maximum gradient by using the formula:

$$G = \log E(a) - \log E(a+0.1) \qquad \text{(Eq. 2)}$$

where:

G = gradient

E = illumination

a = vertical angular position

The maximum gradient positions found on the 3 lines shall be used to construct the cutoff line using the “least squares” method.

The headlamp shall be aimed horizontally in such a way that the line found will intersect the V line at 0.4 D.

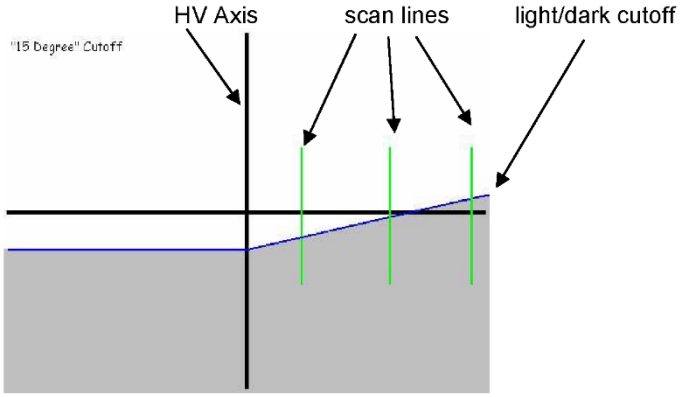

Figure 7 - "3 line" horizontal aim VOLH2

When using the "0.2D line" method (Figures 9 and 10), a single horizontal line at 0.2°D shall be scanned from 5L to 5R after the lamp is aimed vertically. Determine the maximum gradient by using the formula:

$$G = \log E(a) - \log E(a+0.1) \qquad \text{(Eq. 3)}$$

where:

G = gradient

E = illumination

a = horizontal angular position

The maximum gradient positions found on the 0.2D line shall be placed on the V line.

Downloaded from SAE International by Ian Soule, Monday, November 06, 2023

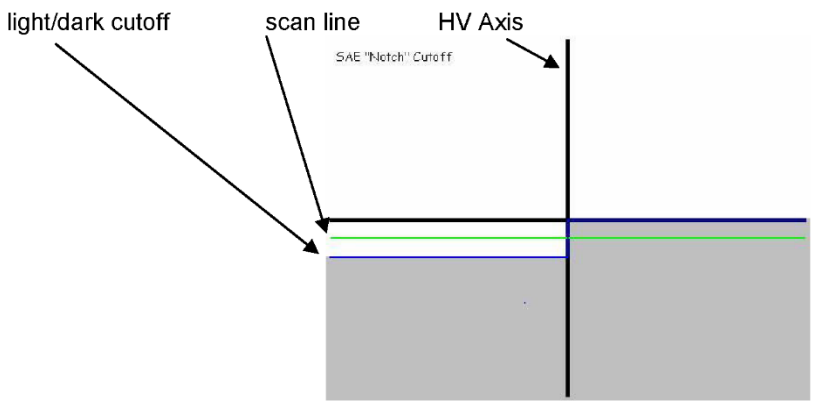

Figure 8 - "0.2 D" horizontal aim VORH or VOLH1

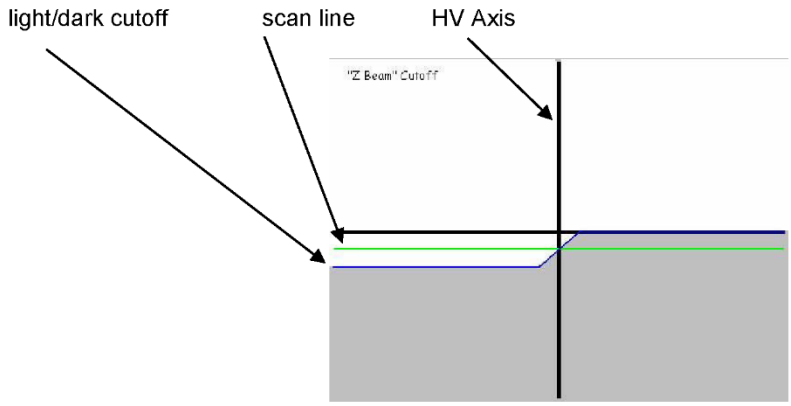

Figure 9 - "0.2 D" horizontal aim VORH or VOLH1

6.8.5.1.5 If the lamp does not pass photometry in the aim position found by the methods in 6.8.5.1 it may be re-aimed vertically within ±0.25 degree if it is a VOR or VOL lamp. If the lamp does not pass photometry in the aim position found by the above methods it may be re-aimed vertically within ±0.25 degree and horizontally within ±1.0 degree if it is a VORH, VOLH1, or VOLH2 lamp. See Table 2.

Table 2 - Combinations of aim mechanisms and aim tolerance allowed

Vertical	Horizontal	Aim Tolerance(1)
Aim Pads	Aim Pads	None
VHAD	VHAD	None
VOL	None	V Only
VOL	VHAD	V Only
VOLH1	VOLH1	V and H
VOLH2	VOLH2	V and H
VOR	None	V Only
VOR	VHAD	V Only
VORH	VORH	V and H

(1) See 6.8.5.1.5 for tolerance amount.

Downloaded from SAE International by Ian Soule, Monday, November 06, 2023

6.8.5.1.6 If the high beam is combined in a headlamp with a low beam, the low beam vertical aim shall be used in testing the photometry of the high beam. If the high beam is not combined in a headlamp with a low beam, the vertical aim of the high beam shall be adjusted so that the maximum beam intensity is located on the H-H axis.

6.8.5.1.7 If the high beam is combined in a headlamp with a low beam, the low beam horizontal aim shall be used in testing the photometry of the high beam. If the high beam is not combined in a headlamp with the low beam and has fixed horizontal aim, there shall be no adjustment of the horizontal axis. If there is a horizontal VHAD it shall be adjusted to zero. If there is a horizontal adjustment that is not a VHAD, the horizontal aim of the high beam shall be adjusted so that the maximum beam intensity is located on the V-V axis.

6.9 Installation Requirements

6.9.1 See SAE J2442 for installation requirements.

6.9.2 A headlamp shall not have any styling ornament or other feature, such as a transparent cover or grille, in front of the lens unless the headlamp meets the requirements of SAE J1383 with the styling ornament or feature in place.

7. GUIDELINES

7.1 Headlamp Design Requirements

Headlamps shall be designed to conform to the photometric requirements applicable to their design.

7.2 Fixed Horizontal Aim Guideline

If horizontal aim adjusting screws are provided on fixed horizontal aim headlamps, they shall be of a tamper-proof design or the end user shall not be able to access the adjuster when the headlamp is installed in the vehicle.

7.3 High beam hotspot design guideline

Peak intensity should be located in the area of 1U to 1D and 2L to 2R.

7.4 Out-of-Focus Test

This test may be conducted on headlamps with replaceable light sources. In place of this test, a computer simulation of the test may also be used.

7.4.1 Out-of-Focus Procedure

7.4.1.1 The headlamp shall be mounted in the goniometer with the mechanical axis coincident with the photometer axis.

7.4.1.2 The headlamp shall be photometered at the appropriate test points listed in Figure 5 and/or Figure 6 as applicable.

7.4.1.3 Intensity measurements shall be made at six out-of-focus positions with the filament (or light emitting surfaces) located at 2/3 of the light source design tolerance contained in SAE J2560.

7.4.2 Out-of-Focus Requirement

At each test point in Figure 5 and/or Figure 6 as applicable, the intensity shall be at least 80% of any required minimum intensity and no more than 120% of any required maximum intensity with a 1/2 degree re-aim allowed at each test point for each of the out-of-focus test positions.

7.5 Start-Stop

Headlights should not turn off during warm engine cranking associated with engine start-stop systems.

Downloaded from SAE International by Ian Soule, Monday, November 06, 2023

8. NOTES

8.1 Revision Indicator

A change bar (l) located in the left margin is for the convenience of the user in locating areas where technical revisions, not editorial changes, have been made to the previous issue of this document. An (R) symbol to the left of the document title indicates a complete revision of the document, including technical revisions. Change bars and (R) are not used in original publications, nor in documents that contain editorial changes only.

PREPARED BY THE SAE ROAD ILLUMINATION DEVICES COMMITTEE OF
THE SAE LIGHTING SYSTEMS GROUP