Volkswagen Group of America, Inc. & Porsche Cars North America, Inc.
v.
Yechezkal Evan Spero

IPR2023-00197, IPR2023-00328, IPR2023-00335
IPR2023-01231, IPR2023-01320, and IPR2023-01321

U.S. Patent No. 10,894,503

VOLKSWAGEN

GROUP OF AMERICA

VWGoA EX1072
VWGoA v. Spero
IPR2023-00197

Petitioner's Demonstratives

Volkswagen Group of America, Inc. & Porsche Cars North America, Inc.
v.
Yechezkal Evan Spero

IPR2023-00197, IPR2023-01231
U.S. Patent No. 10,894,503

VOLKSWAGEN

GROUP OF AMERICA

Petitioner's Demonstratives

IPR2023-00197: Instituted Grounds

IPR2023-00197 ('503 Patent)			
Grounds based on Karlsson-Harbers		**Grounds based on Beam-Thominet**	
References	**Claims**	**References**	**Claims**
Karlsson-Harbers	20, 24-25, 59, 63, 64	Beam-Thominet	20, 24-25
		Beam-Thominet-Stam	59, 63-64
Karlsson-Harbers-Gotou	21-23, 60-62	Beam-Thominet-Kobayashi	21-23
		Beam-Thominet-Stam-Kobayashi	60-62

IPR2023-00197: Agenda (Independent Claims 20/59)

1. A POSA would have been motivated to combine: 1) Harbers's curved LED substrate with Karlsson; and 2) Thominet's curved LED substrate with Beam.
2. Karlsson-Harbers and Beam-Thominet disclose a headlight system that determines:
   - a first subsection including a detected vehicle [20.9]/[59.7],
   - a second subsection not including the detected vehicle [20.10].
3. Beam-Thominet-Stam discloses a headlight system that determines a light output for the first subsection "substantially resulting in light below a predefined illuminance in the first subsection" [59.8-59.9].
4. The Karlsson-Harbers and Beam-Thominet grounds render obvious all dependent claims:
   - Reflector/lens claims, and
   - Road curvature claims.
5. Dr. Turk's testimony should be excluded.

IPR2023-00197: ’503 Patent – Independent Claim 20

Issued Claim 20	Limitation	Issued Claim 20	Limitation
20.P	A vehicle headlight system, comprising:	20.7	defined as pertinent to determining illumination output from the one or more headlamps and
20.1	one or more headlamps affixed to a vehicle,	20.8	communicating the sensed information to a processor as sensor data;
20.2	each headlamp including at least three directional light sources aimed at different angles relative to the vehicle,	**20.9**	the processor, in communication with at least the sensors and the control circuitry, configured to: process the sensor data to determine, within a field of-view, at least a first subsection including a detected vehicle and
20.3	the light sources configured to have one or more controllable light characteristics,	**20.10**	at least a second subsection not including the detected vehicle,
20.4	wherein a first light source of the more than one light sources at a first angle is less visually disturbing to traffic than a second light source of the more than one light sources aimed at a second angle, different from the first angle;	20.11	determine optimal use of the differently aimed directional light sources to maximize vehicle operator visibility in at least the second subsection,
20.5	control circuitry configured to adjust the at least one light characteristic of at least one of the directional light sources;	20.12	while minimizing a disturbing effect, resulting from the illumination output, on the vision of other traffic in at least the first subsection
20.6	one or more sensors configured to sense information:	20.13	direct the control circuitry to adjust the directional light sources to achieve the determined optimal use.

Pet., pp. 33-49, 87-105.

IPR2023-00197: ’503 Patent – Independent Claim 59

Issued Claim 59	Limitation	Issued Claim 59	Limitation
59.P	A vehicle headlight system, comprising:	**59.7**	wherein the at least one processor is configured to: process the sensor data to identify a first subsection, of a field of view, that includes at least a portion of the second vehicle
59.1	one or more headlamps affixed to a first vehicle,	**59.8**	determine light output for the headlight system that aims illumination at the first subsection,
59.2	each headlamp including at least three directional light sources having different aimings relative to the first vehicle,	**59.9**	the illumination aimed at the first subsection substantially resulting in light below a first predefined illuminance in the first subsection, and
59.3	the light sources having one or more controllable illumination characteristics;	59.10	that aims illumination at one or more second subsections of the field of view to either side of the first subsection,
59.4	one or more sensors configured to sense information:	59.11	the illumination aimed at the one or more second subsections substantially resulting in light above the first predefined illuminance in the one or more second subsections; and
59.5	at least a portion of the sensed information indicating a second vehicle, and	59.12	instruct adjustment of one or more of the light sources to achieve the determined output.
59.6	communicate sensor data reflecting the sensed information to at least one processor;		

Pet., pp. 55-64, 87-11.

Grounds Based on Karlsson and Harbers

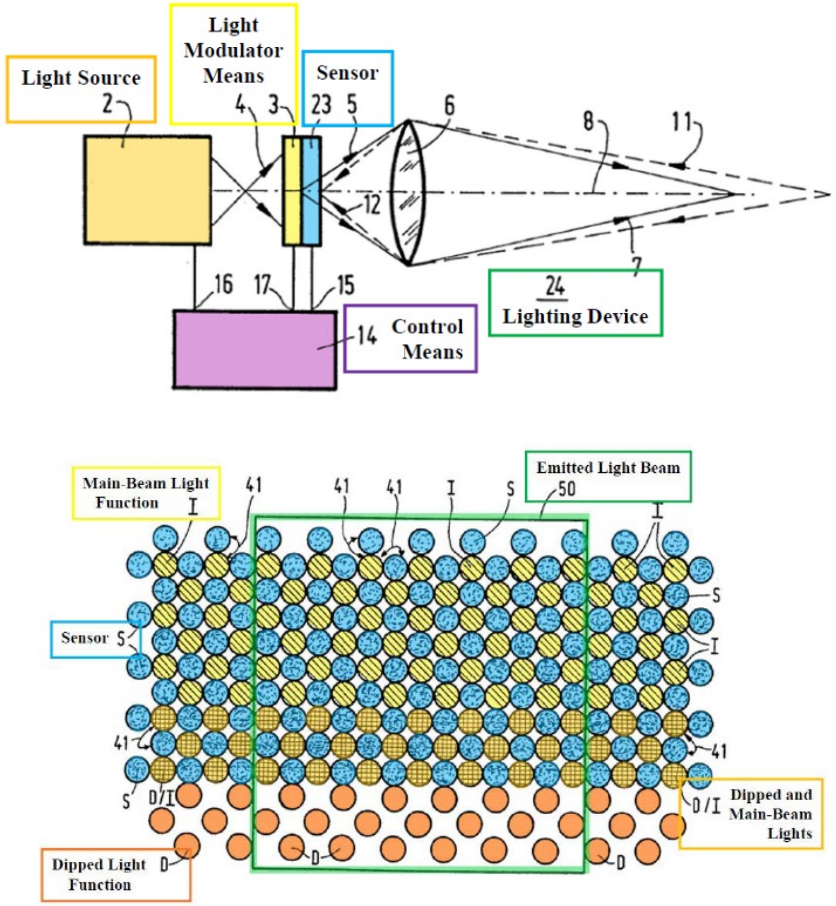

Karlsson, EX1010, FIG. 3, FIG. 14 (annotated).

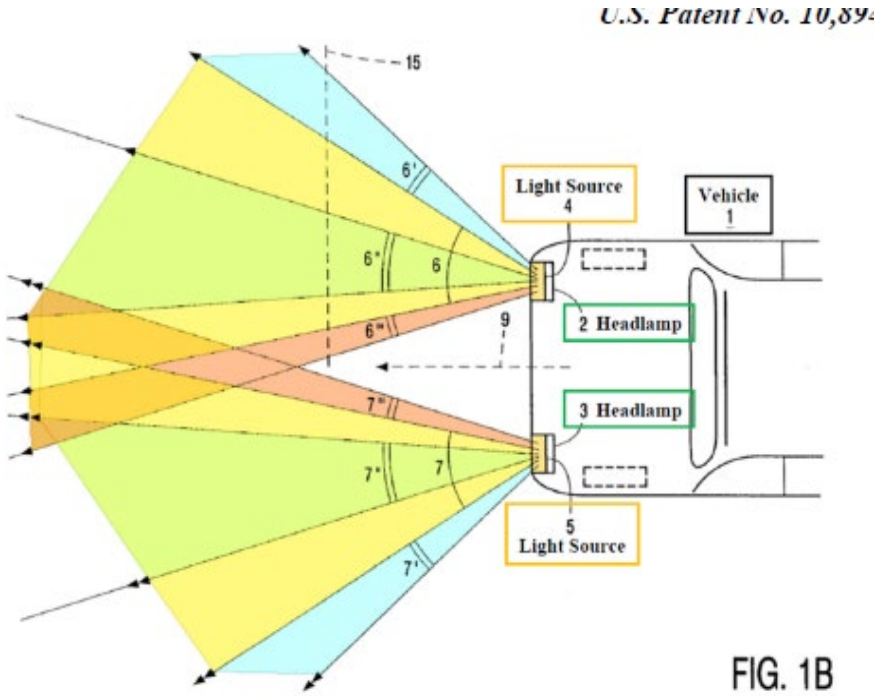

Harbers, EX1011, FIG. 1B (annotated).

Pet., pp. 18-48; Jiao First Dec., EX1003, ¶¶99-108, 332-418.

Karlsson's Headlamps Control Multiple Light Beam Subsections

When the lighting device 1 is used as a headlight in a car, the pattern and the intensity of the light beam 7 are, for example, controlled in such a manner that no light at all or light having a low intensity is emitted in those directions from which light is detected by the light-sensitive sensor 9. In this manner glaring or blinding of oncoming traffic is effectively prevented, for example, whereby the lighting means 2, 3 can operate with a light intensity and with a light beam which are optimally adapted to the road and to the ambient light, which will significantly increase the driving comfort and the road safety.

Karlsson, EX1010, 9:19-26.

The emitted light beam 50 is represented as a window which can shift in the plane of the drawings from the left to the right and from the top to the bottom, if desired, and vice versa, and which may vary as regards its shape and dimension in dependence on the desired pattern and direction of the beam.

Karlsson, EX1010, 19:29-34.

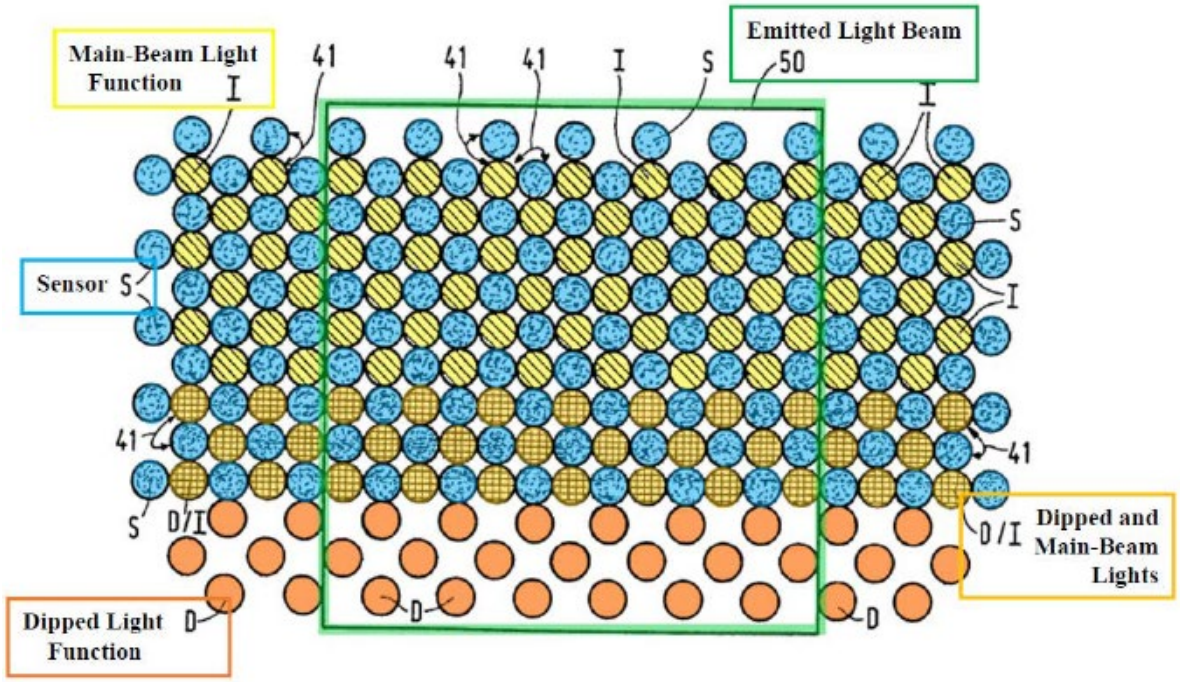

Karlsson, EX1010, FIG. 14 (annotated).

Pet., pp. 18-20, 76-79, 99-111; Jiao First Dec., EX1003, ¶¶99-104, 333-342, 407-418.

Harbers's System Uses an LED Array on Curved Substrate to Generate Headlights with Multiple Beam Segments

14 in light source 4 does not have to be equal to that in light source 5. The array of opto-electronic elements 11; 12; 13; 14 does not have to be provided on a flat substrate, it may alternatively be provided on a curved substrate. The shape of the substrate on which the array of opto-electronic elements 11; 12; 13; 14 is provided is determined to a substantial degree by the desired direction of the light beams emitted by the various opto-electronic elements 11; 12; 13; 14.

Harbers, EX1011, 7:26-33.

The light beams may also be composed of more than four beam segments, for example five or more beam segments having different spatial distributions and/or different spectral characteristics. In general, the light originating from two or more beam segments demonstrates an overlap. Partly because of the generally diverging character of the light beams, overlap between the various beam segments 6, 6', 6", 6'"; 7, 7', 7", 7'" is unavoidable.

Harbers, EX1011, 7:15-19.

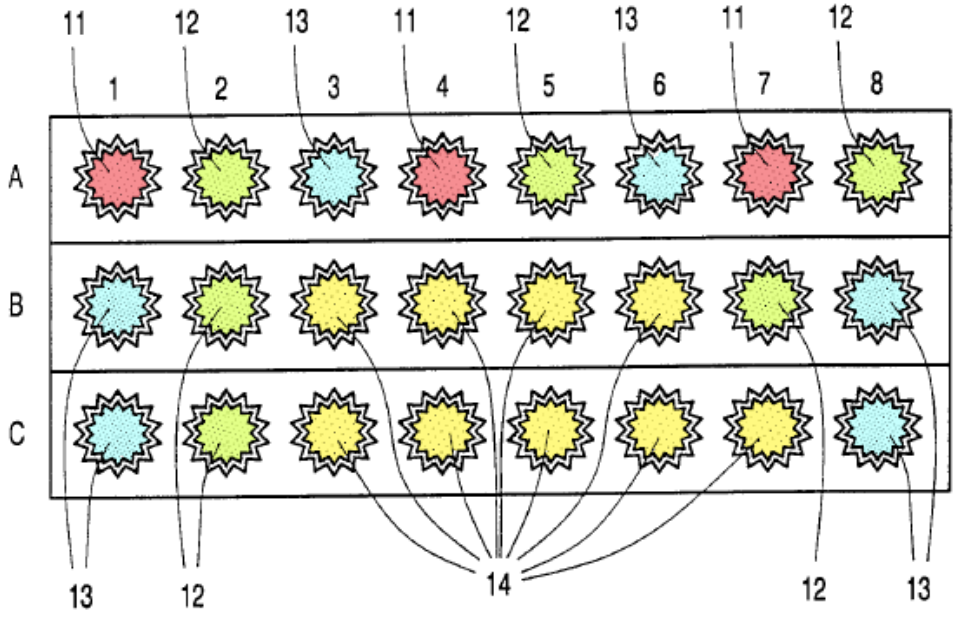

Harbers, EX1011, FIG. 2 (annotated).

Pet., pp. 21, 80-87, 88-92; Jiao First Dec., EX1003, ¶¶137-143.

IPR2023-00197: Harbers Discloses Light Sources Aimed at Different Angles ([20.2]/[59.2])

IPR2023-00197	
[20.2]: "each headlamp including at least three **directional light sources aimed at different angles** relative to the vehicle"	**[59.2]:** "each headlamp including at least three **directional light sources having different aimings** relative to the first vehicle"

Pet., pp. 34-36, 56, 88-91; POR, pp. 65-67; Pet. Reply, pp. 6-8.

Motivation to Combine Harbers's Curved Substrate with Karlsson

Harbers discloses an array of opto-electronic elements 11-14 on a curved substrate that emits light beam segments 6-6'-6"-6'", 7-7'-7"-7'" with different angles/aimings relative to longitudinal direction 9 for different functions. EX1011, 5:14-26, 6:1-7, 6:27-7:19, FIGS. 1B-2, 7:27-32 ("*curved substrate…determined* to a substantial degree by the *desired direction* of the light beams emitted"), 7:1-17;

Petition, p. 90.

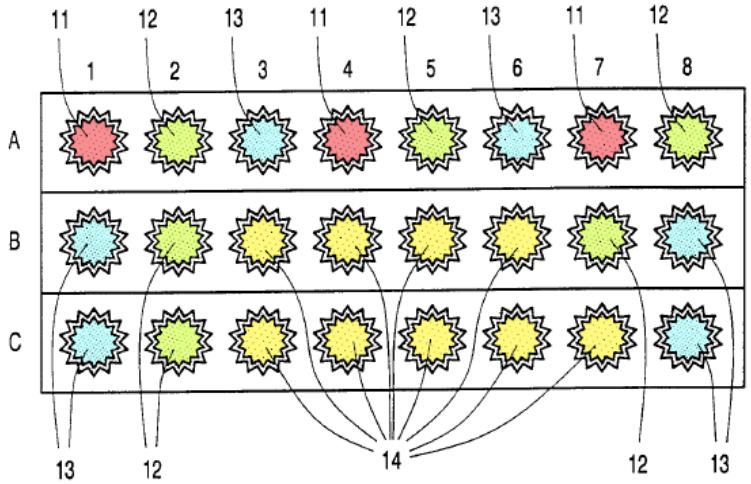

Harbers, EX1011, FIG. 2 (annotated).

354. *Second*, additionally or alternatively, a POSA would have sought to incorporate *known components* (hardware implementation) of Harbers's opto-electronic elements 11-14 on a "curved substrate" (with differently angled/aimed opto-electronic elements 11-14 relative to the vehicle, *see* EX1011, 5:14-26, 6:1-7, 6:27-7:32, FIGS. 1B, 2) into Karlsson's system (with lighting means 2, 3). Again, this would have, like Harbers, provided different spatial distributions for different driving situations (e.g., off-axis viewing, bends, narrow roads, motorways, etc.), improving visibility and thereby safety. This is a simple hardware implementation.

Jiao First Dec., EX1003, ¶354.

Pet., pp. 80-87, 90-92; Jiao First Dec., EX1003, ¶¶343-359, 373-392; Pet. Reply, pp. 9-10; Jiao Second Dec., EX1051, ¶¶146-150.

Motivation to Combine Harbers's Curved Substrate with Karlsson

As detailed with respect to sub-ground 1E, *supra*, for Beam-Thominet, a POSA would understand that the addition of Harbers' curved substrate alone, is of no more use than Thominet's substrate. (§VIII.A.2.e(2), *supra*.)

Patent Owner's Argument
POR, p. 62.

149. Rearranging Karlsson's LEDs on a curved surface, as taught in Harbers, would have yielded the predictable result of providing different spatial distributions for different driving situations. EX1003, ¶354. In doing so, Beam-Thominet's headlight systems would "improve[e] visibility and thereby safety." EX1003, ¶¶354-359, 384-389.

150. In response to Dr. Turk's unsupported argument (EX2006, ¶¶142-147, 206), a POSA seeking to improve driver visibility by modifying headlights—as explained in my First Declaration—would have readily known that curved substrates enhance the headlight's optical performance. As I explained above in §VI.C, a POSA would have understood that using angular-sectional beam contributors, such Harbers's curved LED arrangement, simplifies the optical element design for headlights by reducing aberration. Thus, a POSA would have preferred using a curved substrate over a flat substrate for a vehicle headlight. As I

Jiao Second Dec., EX1051, ¶¶149-150.

Pet., pp. 80-87; Jiao First Dec., EX1003, ¶¶343-359, 373-392; POR, p. 62; Pet. Reply, pp. 9-10; Jiao Second Dec., EX1051, ¶146-150.

"Separate" Motivation Is Not Required for the Hardware Modification

And contrary to the Board's suggestion, Intel never had to show that replacing Kabemoto's secondary cache with Bauman's secondary cache was an "improvement" in a categorical sense. *See Final Written Decision*, 2021 WL 3503434, at *11. Intel just had to show that Bauman's secondary cache was a "suitable option" to replace Kabemoto's secondary cache. *Intel*, 21 F.4th at 800 (emphasis omitted).

Intel Corp. v. PACT XPP Schweiz AG, 61 F.4th 1373, 1381 (Fed. Cir. 2023).

the secondary references' curved substrate. The parties may also wish to address whether the law requires a specific or separate motivation to include what may be an optional aspect of the secondary references.

Inst. Decision, p. 20.

Here, Thominet and Harbers each described two known techniques—flat/curved substrate—for generating headlight beams with different spatial distributions. Because Thominet's/Harbers's curved substrates are both suitable options, the Petition's explanation is sufficient. Pet., 30-33, 85-87; EX1003, ¶135-141, 164-170, 354-359, 384-389; EX1051, ¶¶84, 146.

Pet. Reply, p. 10.

Pet. Reply, pp. 10-11; Jiao Second Dec., EX1051, ¶¶84, 146-147.

IPR2023-00197: First Subsection Including a Detected Vehicle and Second Subsection Not Including a Detected Vehicle ([20.9]-[20.10]/[59.7])

IPR2023-00197	
[20.9]-[20.10]: "the processor …configured to: process the sensor data to determine, within a field-of-view, at least **a first subsection including a detected vehicle** and at least **a second subsection not including the detected vehicle**"	**[59.7]:** "processor is configured to: process the sensor data to **identify a first subsection**, of a field of view, **that includes at least a portion of the second vehicle**"

Pet., pp. 43-46; POR, pp. 48-49; Pet. Reply, pp. 18-20.

Karlsson's Headlight System Determines a First Subsection Including a Detected Vehicle ([20.9]-[20.10]/[59.7])

Karlsson discloses "incident light 11 on the light-sensitive sensor 9…is processed into an electric control signal on input 15 of the control means 14." EX1010, 9:9-17, FIGS. 3, 14-15, 5:16-23 ("detecting…oncoming traffic as a parameter"), 2:7-9 ("part of the light beam…is automatically suppressed"), 3:27-31 ("field of view"), 5:28-32, 9:18-26, 20:12-32, 21:36-22:4, 14:26-30; EX1003, ¶¶407-408. Thus, the processor processes the inputted incident light data, determines/identifies a vehicle within the headlight's field-of-view, and determines/identifies an area to be suppressed within a subsection of the field-of-view (shaded area of no intensity). EX1010, 9:9-17, 12:19-24, FIGS. 14-15; EX1003, ¶¶408-409.

Petition, p. 99.

In the case of sensor means used for detecting ambient light and light from oncoming traffic as a parameter to which the pattern of the emitted light beam is to be adjusted, a preferred embodiment of the invention comprises spotlight sensors in the form of, for example, photosensitive diodes, photo transistors or other light-sensitive semiconductor components, which are spatially distributed in a predetermined manner or at random so as to be capable of detecting light from desired directions or from all directions.

Karlsson, EX1010, 5:16-23.

When the lighting device 1 is used as a headlight in a car, the pattern and the intensity of the light beam 7 are, for example, controlled in such a manner that no light at all or light having a low intensity is emitted in those directions from which light is detected by the light-sensitive sensor 9. In this manner glaring or blinding of oncoming traffic is effectively prevented, for example, whereby the lighting means 2, 3 can operate with a light intensity and with a light beam which are optimally adapted to the road and to the ambient light, which will significantly increase the driving comfort and the road safety.

Karlsson, EX1010, 9:18-26.

Pet., pp. 99-100; POR, p. 70; Pet. Reply, pp. 24-25; Jiao Second Dec., EX1051, ¶¶139-144.

Karlsson's Headlight System Determines a First Subsection Including a Detected Vehicle ([20.9]-[20.10]/[59.7])

As such, Karlsson, like Beam, is agnostic to the source of the incoming light and does not disclose any processing of the spotlight sensor signals to determine whether the source is a vehicle, house light, interior light, streetlight, or another light source. (Ex.2006, ¶227.) Rather, Karlsson simply adjusts intensity of one or more spotlight beams associated with the spotlight sensors that detect incoming light. (*Id.*.) Accordingly, for the same reasons detailed in Ground 1B, Ground 5B

Patent Owner's Argument
POR, pp. 70-71.

Pet., pp. 99-100; POR, p. 70; Pet. Reply, pp. 24-25; Jiao Second Dec., EX1051, ¶¶139-144.

The Claims Do Not Recite How The Vehicle Is Detected

PO/Dr. Turk impermissibly add limitations absent from the '503 patent claims, arguing that "Beam lacks any specific way to differentiate between different sources of incoming light." POR, 49; EX2006, ¶163. This is not required

Pet. Reply, p. 18.

Based on my review of the claim language, claim element [20.9] is generic to how the processor determines the first subsection—it does not recite any features specifying how the processor uses the sensor data to detect a vehicle.

Jiao Second Dec., EX1051, ¶73.

Q. Claim 20 does not recite that the processor detects the vehicle; is that correct?

MR. TURNER: Objection. Vague.

THE WITNESS: Well, it says a detected vehicle. I don't think there's anything in this claim that specifies how that vehicle was detected.

BY MR. FITZSIMMONS:

Q. And claim 20 does not specify any particular type of sensor data that is required to determine a detected vehicle; is that correct?

A. I think that's correct.

Turk Depo. Transcript, EX1052, 40:8-18.

Pet. Reply, pp. 18-20, 24-25; Jiao Second Dec., EX1051, ¶¶71-77, 139-144; POR, pp. 49, 70; Turk Second Dec., EX2006, ¶¶163, 227.

Karlsson's Headlight System Determines a First Subsection Including a Detected Vehicle ([20.9]-[20.10]/[59.7])

Karlsson Detects a Vehicle Using the Same Technique Described in the '503 Patent

143. Second, PO's and Dr. Turk's alleged distinctive feature of claims 20 and 59—using pattern recognition to detect vehicles for anti-glare control—is not commensurate with the vehicle detection methods described in '503 patent specification for anti-glare control. POR, 70; EX2006, ¶227; EX1001, 50:35-58, 52:66-53:2. Karlsson's detection of vehicle headlights to determine the position of an oncoming vehicle relative to the headlight is consistent with the methods described in the '503 patent. *Compare* EX1001, 50:53-58, 52:66-53:2 *with* EX1010, 9:9-25.

Jiao Second Dec., EX1051, ¶143.

off time is not part of the lifetime). The multiple light-source, digital device, is an electronic headlight which provides the driver with the correct aiming, illumination level and distribution (e.g. parking lights, low beam, high beam, lighting around curves and corners) based on input from the vehicle's speed, steering wheel position, turn signal indicator and detection of approaching headlights. These

'503 Patent, EX1001, 50:53-58.

Analysis by a detector or an imaging system of the oncoming vehicles position (using its headlights for example) can be used to determine which exact aiming is the maximum allowable for any given traffic situation and road layout.

'503 Patent, EX1001, 52:66-53:2.

Pet., pp. 99-100; POR, p. 70; Pet. Reply, pp. 24-25; Jiao Second Dec., EX1051, ¶¶139-144.

Grounds Based on Beam and Thominet

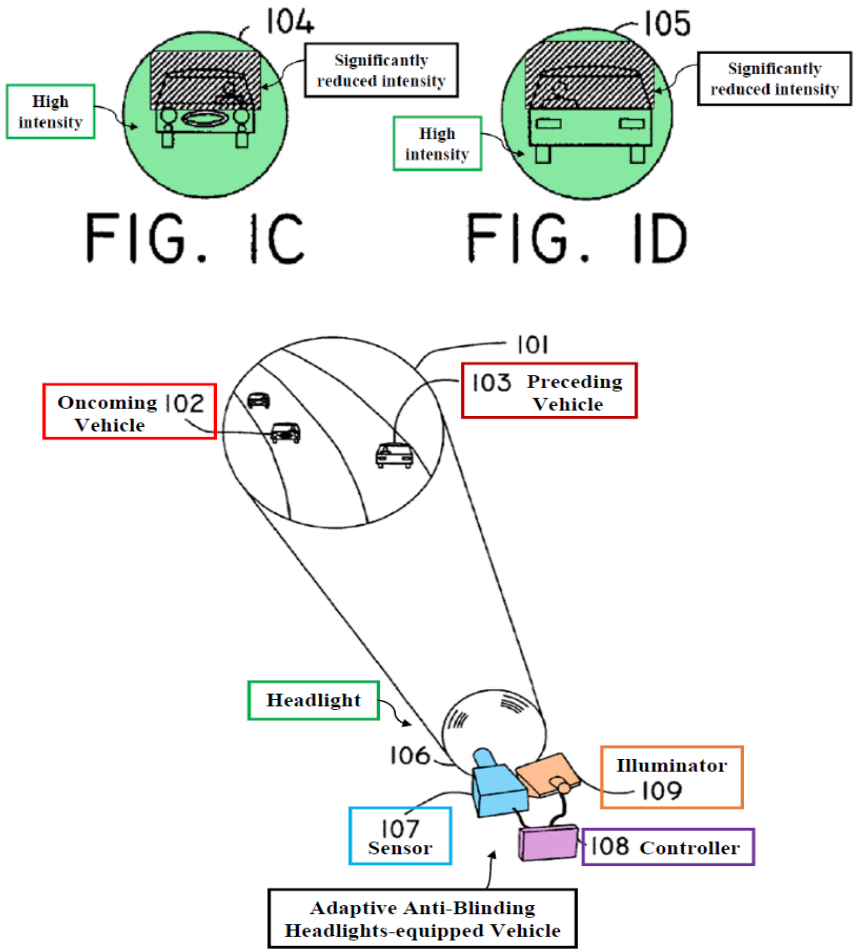

Beam, EX1005, FIGs. 1, 1C, 1D (annotated).

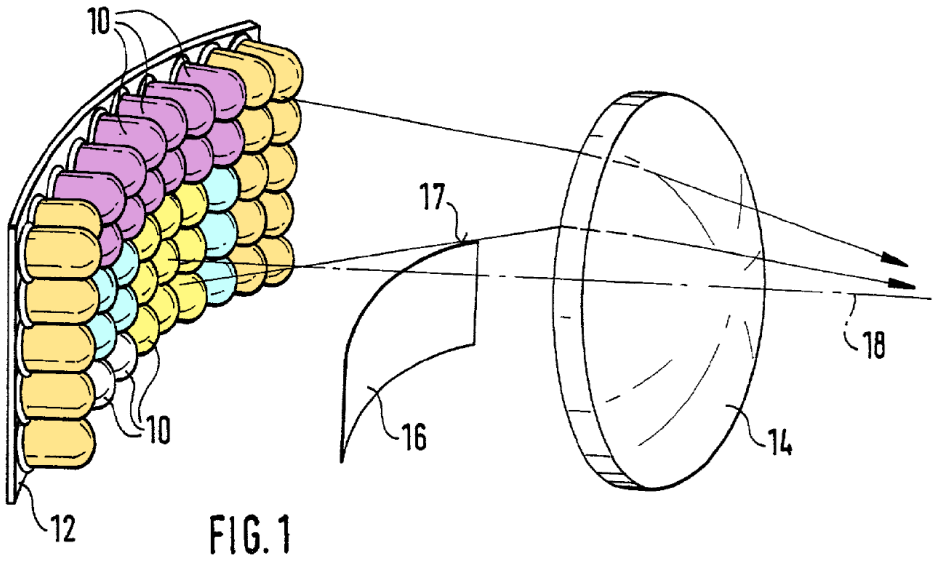

Thominet, EX1006, FIG. 1 (annotated).

Pet., pp. 12-16, 25-49; Jiao First Dec., EX1003, ¶¶74-87, 117-193.

Beam's Headlamps Control Multiple Light Beam Subsections Using LEDs and SLMs Together

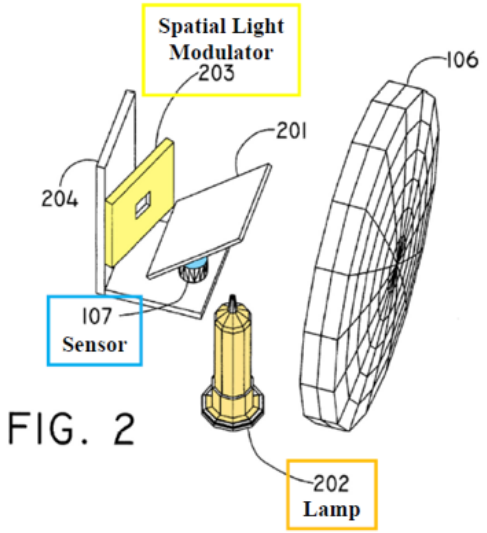

FIG. 2

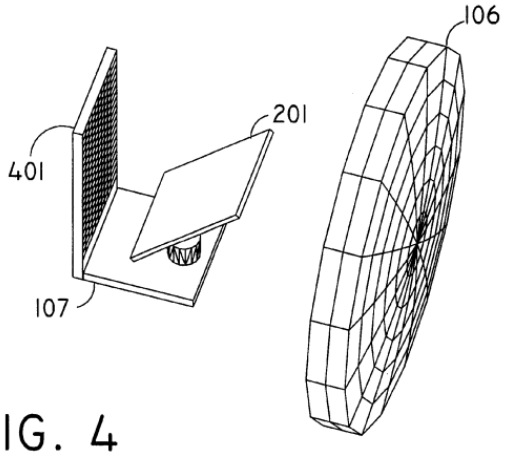

FIG. 4

Beam, EX1005, FIGs. 2, 4.

This invention relates to the production of a beam of light comprised of many microbeams, controlled by incoming radiation, employing a sensor to determine the location of light sources forward of the apparatus and using that information to control the intensity, and/or the angular position, of one or more narrow-angle microbeams, which are part of a large number of beams comprising the overall output beam.

Beam, EX1005, Abstract.

19 Therefore, my understanding of figure 4
20 is -- is the same illustration for Beam's disclosure
21 where 401 is replaced of 202 in figure 2 and 203
22 function as micro- -- microbeam sources. The POSA
1 would understand reading Beam's and 401 cannot be
2 only emitters because emitter has no directionality
3 and micro -- microbeam sources as directional is
4 narrow-angle direction; therefore, the 401 is the
5 combination of the emitter and spatial light
6 modulator.

Jiao Depo. Transcript, EX2026, 74:19-75:6.

Pet., pp. 12-14, 33-49; Jiao First Dec., EX1003, ¶¶74-82.

Even Dr. Turk Agrees Beam Uses LEDs and SLMs together

4. The anti-blinding illumination system as set forth in claim **1** wherein said light source includes an array of individual, independently controllable microbeam sources selected from the group consisting of light-emitting diodes, lasers, incandescent lamps, arc lamps and electroluminescent lamps, and a spatial light modulator selected from the group consisting of digital mirror devices, liquid crystal devices, and grating light valves for selectively controlling the intensity of individual microbeam sources in said array.

Beam, EX1005, claim 4.

Q. Let's go to the claims of Beam. If you go toward the end of the document. Have you seen column 8, claim 4 of the Beam patent?

A. Yes.

Q. Claim 4 recites, "Said light source includes an array of individual independently controllable microbeam sources," correct?

A. Yes.

Q. And claim 4 recites that those microbeam sources can be light-emitting diodes, correct?

A. It says that, yes.

Q. Claim 4 also recites a spatial light modulator, correct?

A. Yes.

Turk Depo. Transcript, IPR2022-01586, EX1054, 89:13-90:1.

Pet. Reply, pp. 28-29; Jiao Second Dec., EX1051, ¶¶54-57.

Thominet's System Uses an LED Array on Curved Substrate

conventional headlights. The illumination device has a plurality of semiconductor sources **10** which are distributed in a matrix. A support element **12** can be provided, on which the semiconductor light sources **10** are held and electrically contacted.

Thominet, EX1006, ¶17.

[**0018**] The semiconductor light sources **10** can be arranged approximately in one plane, or can be distributed over a concavely curved surface or a stepped surface. The surface for example can have a substantially spherical curvature. In a path of rays of the light emitted by the

Thominet, EX1006, ¶18.

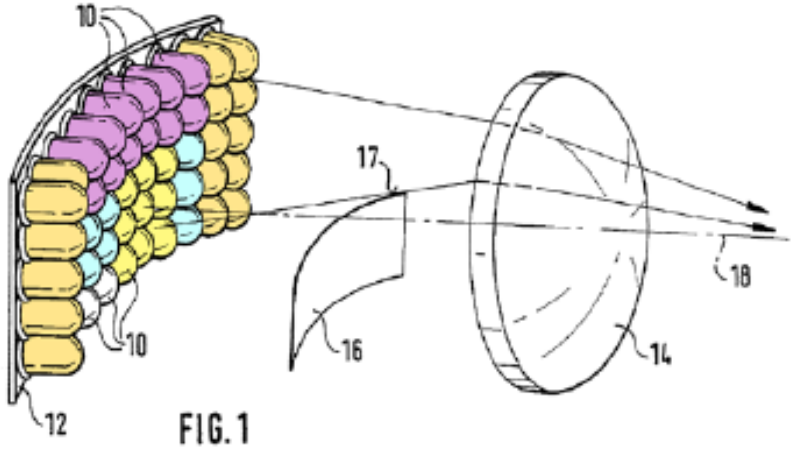

Thominet, EX1006, FIG. 1 (annotated).

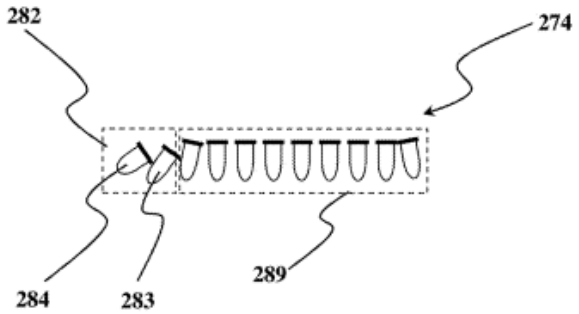

'503 Patent, EX1001, FIG. 15.

Pet., pp. 9, 15, 25-33; Jiao First Dec., EX1003, ¶¶83-87.

Thominet's System Controls Multiple Beam Segments

are arranged. The semiconductor light sources **10** arranged in the different partial regions are actuatable independently from the semiconductor sources **10** arranged in the remaining partial regions. It can be provided that the semiconductor

Thominet, EX1006, ¶20.

[**0026**] By operation of the light sources **10** of the corresponding partial region **22, 24, 26, 28** in a simple manner it is possible to switch over between the above mentioned different light functions. Such a switchover can be performed manually by the vehicle driver or automatically by a control device depending on the operational parameters of the vehicle, such as for example the speed and/or the steering wheel action and/or depending on other parameters such as for example the wiper and/or sensor system, such as for example for recognizing a counter traffic. The switching over of the operation of the semiconductor sources **10** of the partial region **22, 24, 26, 28** to the operation of the semiconductor light sources of another partial region can be performed with continuous or abrupt transition.

Thominet, EX1006, ¶18.

[**0004**] Accordingly, it is an object of the present invention to provide an illumination device for a vehicle which has the advantage that by the operation of different partial numbers of semiconductor sources, the characteristic of the light beam exiting the illumination device can be changed so that it can be used for different functions.

Thominet, EX1006, ¶4.

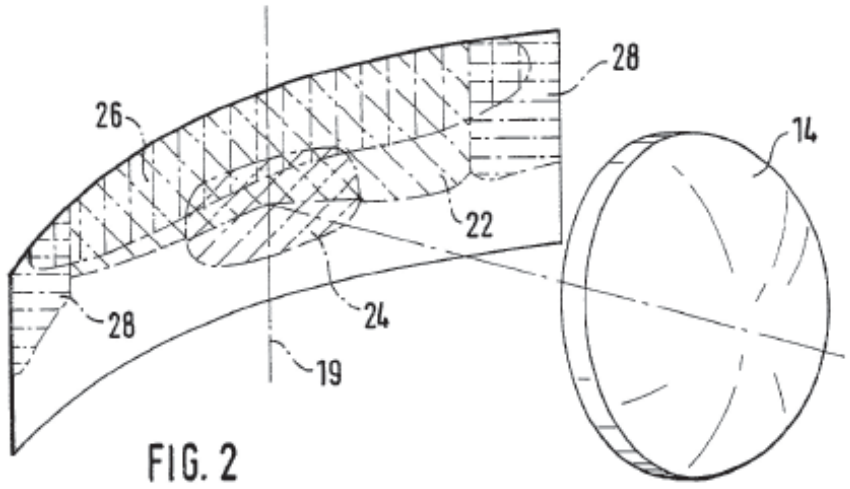

FIG. 2

Thominet, EX1006, FIG. 2.

Pet., pp. 15, 25-33; Jiao First Dec., EX1003, ¶¶83-87, 128-134.

IPR2023-00197: Light Sources Aimed at Different Angles ([20.2]/[59.2])

IPR2023-00197	
[20.2]: "each headlamp including at least **three directional light sources aimed at different angles** relative to the vehicle"	**[59.2]:** "each headlamp including at least three directional **light sources having different aimings** relative to the first vehicle"

Pet., pp. 34-36, 56, 88-92; POR, pp. 65-67; Pet. Reply, pp. 6-8.

Motivation to Combine Thominet's Curved Substrate with Beam

Thominet's headlights include directional, independently controllable semiconductor light sources 10 (e.g., LEDs) arranged on curved surface 12 to provide beam regions 22, 24, 26, 28 with different angles/aimings for different functions. EX1006, ¶¶17-18, 21-26, FIGS. 1-2; EX1003, ¶151. For example,

Petition, p. 35.

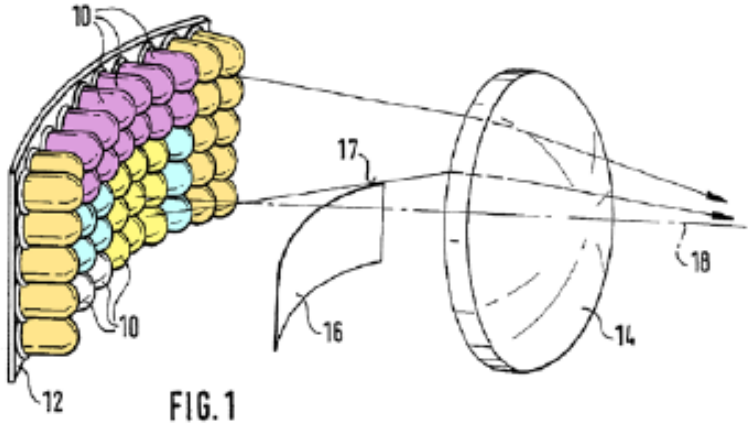

Thominet, EX1006, FIG. 1 (annotated).

164. *Second*, additionally or alternatively, a POSA would have sought to incorporate *known components* (hardware implementation) of Thominet's semiconductor light sources 10 on curved surface 12 (with differently angled/aimed semiconductor light sources 10 relative to the vehicle, *see* EX1006, ¶¶17-20, 23-26, FIGS. 1-2, 5-7) into Beam's system (with flat array of light sources 401). Again, this would have, like Thominet, provided different spatial distributions for different driving situations (e.g., low visibility, low/high speeds, recognizing a counter traffic, curves, etc.), improving visibility and thereby safety. This is a simple hardware combination.

Jiao First Dec., EX1003, ¶164.

Pet., pp. 25-35; Jiao First Dec., EX1003, ¶¶123-141, 153-170; Pet. Reply, pp. 9-11; Jiao Second Dec., EX1051, ¶¶84-87.

Motivation to Combine Thominet's Curved Substrate with Beam

Here, neither the Petition nor the accompanying Jiao Declaration offer any evidence as to why in the "hardware combination" of Grounds 1D-1E, a POSA would have even a general motivation to combine Thominet's curved hardware with the Beam system. (Ex.2006, ¶142.) Indeed, rather than providing a

Patent Owner's Argument
POR, p. 41.

86. Indeed, rearranging Beam's LEDs on a curved surface, as taught in Thominet, would have yielded the predictable result of providing different spatial distributions for different driving situations. EX1003, ¶¶138. In doing so, Beam-Thominet's headlight systems would "improve[e] visibility and thereby safety." EX1003, ¶¶135-141, 164-170. In Thominet's disclosure, the LEDs are "LED packages" that include optical elements as the secondary optics (lens), which have the equivalent function of the SLM (directional, aimable). To modify Beam's hardware, a POSA would simply need to arrange Beam's light sources 401 on a curved surface, as in Thominet. This combination is rather simple for a POSA.

Jiao Second Dec., EX1051, ¶87.

Pet., pp. 25-35; Jiao First Dec., EX1003, ¶¶123-141, 153-170; POR, p. 39; Pet. Reply, pp. 9-11; Jiao Second Dec., EX1051, ¶¶84-87.

IPR2023-00197: First Subsection Including a Detected Vehicle and Second Subsection Not Including the Detected Vehicle ([20.9]/[59.7]/[59.10])

IPR2023-00197	
[20.9]-[20.10]: "the processor …configured to: process the sensor data to determine, within a field-of-view, at least **a first subsection including a detected vehicle** and at least **a second subsection not including the detected vehicle**"	**[59.7], [59.10]:** "processor is configured to: process the sensor data to identify **a first subsection**, of a field of view, **that includes at least a portion of the second vehicle**; … [and] aims illumination at **one or more second subsections** of the field of view to either side of the first subsection"

Pet., pp. 43-45; POR, pp. 48-49; Pet. Reply, pp. 18-21.

Beam's Headlight System Determines a First Subsection Including a Detected Vehicle ([20.9]/[59.7])

Beam discloses "*spatial scene data* from sensor 107…becomes the input to *a processor 1105*" and "*[p]rocessor 1105* uses appropriate algorithms on the incoming data to *determine the locations to be blanked*…outputs *blanking signals*…*commands* the appropriate pixels to be *reduced in intensity*." EX1005, 5:34-36, 5:46-54, FIGS. 1, 1C-1D, 7, Abstract, 6:14-16 ("headlight's *field-of-view*"), 5:65-6:2 ("a *dimmed area*…based on input to the sensor"); EX1003, ¶184. Thus, the processor processes the inputted spatial sensor data, determines/identifies a vehicle within the field-of-view, and determines/identifies an area to be dimmed within a subsection of the field-of-view (shaded area based on blanking signals). EX1005, 6:12-27, FIGS. 1C-1D, 5:33-54 ("*blanking* signals"), 6:24-27 ("blanked area *tracks* the location of the *oncoming vehicle*"); EX1003, ¶¶184-185.

Petition, p. 43.

The controller module uses the sensor spatial data (video) to determine whether there are illumination sources (headlights or tail lights) present in the headlight's field-of-view, determines their location relative to the Adaptive Anti-Blinding Headlights beam, and uses these data to control the Illuminator. When an oncoming vehicle's headlights are detected

Beam, EX1005, 6:14-19.

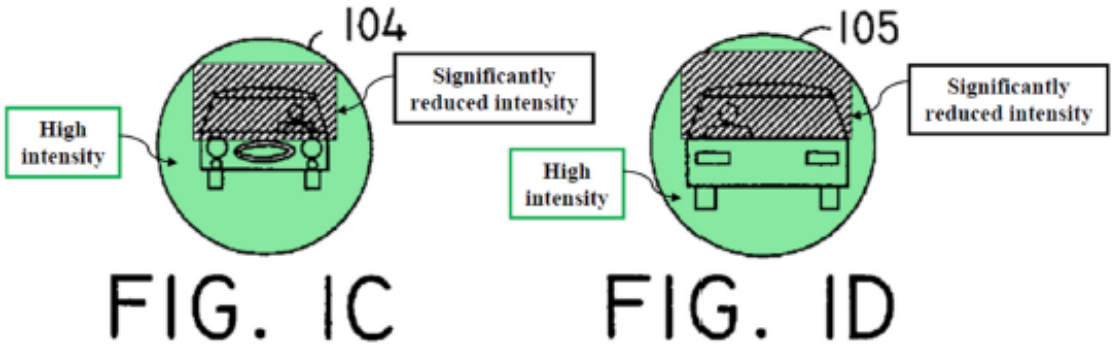

Beam, EX1005, FIGs. 1C, 1D (annotated).

Pet., pp. 43-46; POR, p. 49; Turk Second Dec., EX2006, ¶¶162-163; Pet. Reply, pp. 18-20; Jiao Second Dec., EX1051, ¶¶71-77.

Beam's Headlight System Determines a First Subsection Including a Detected Vehicle ([20.9]/[59.7])

Beam detects vehicles via thresholding light input

Beam's AABH system is agnostic to whether the incoming light is from a vehicle, a streetlight or another light source; it simply blanks all LEDs correlated with the position of incoming light, regardless of the classification of the light source. (Ex.2006, ¶163.) Thus, Beam lacks any specific way to differentiate between different sources of incoming light. (*Id.*) Beam's generalized, more simplistic solution is devoid of a machine vision system or pattern recognition system for detecting a vehicle. (*Id.*, ¶91.) As such, it is incapable of detecting and segmenting the field of view based on the location of the detected vehicle, as required by the [20.9] limitations.

Patent Owner's Argument
POR, p. 49.

77. Third, a POSA would have understood that Beam's system distinguishes between light sources when determining the presence of a vehicle based at least in part on the detected vehicle's headlights. Beam's system determines a location of the other traffic (via headlights or taillights) using the coordinate-specific information (the video data from the camera). EX1005, 4:29-30, 6:11-15. In Beam, "[t]he spatial scene data from sensor 107 is thresholded to eliminate weak signals and becomes the input to a processor 1105." EX1005, 5:34-36. This filtering technique described in Beam means that lights detected by the sensor are separated into two classes: those that reflect or emit light above the threshold, and those that do not reflect or emit sufficient light. EX1003, ¶184. In

Jiao Second Dec., EX1051, ¶77.

Pet. Reply, pp. 19-20; Jiao Second Dec., EX1051, ¶77.

Beam's Headlight System Determines a Second Subsection Not Including the Detected Vehicle ([20.9]-[20.10])

detected vehicle" (shaded area). *Supra* Section VI.B.10; EX1003, ¶184. Conversely, Beam's processor determines an area to *not* be dimmed within a second subsection of the field-of-view (non-shaded area based on non-blanking signals). EX1005, 6:12-27, FIGS. 1C-1D, 7, 5:33-54 (each pixel of the X-Y matrix is evaluated by the line clock and dot clock to either be blanking or non-blanking), 4:45-48; EX1003, ¶184. Thus, Beam discloses determining "a second subsection not including the detected vehicle" (non-shaded area). EX1003, ¶187.

Petition, pp. 45-46.

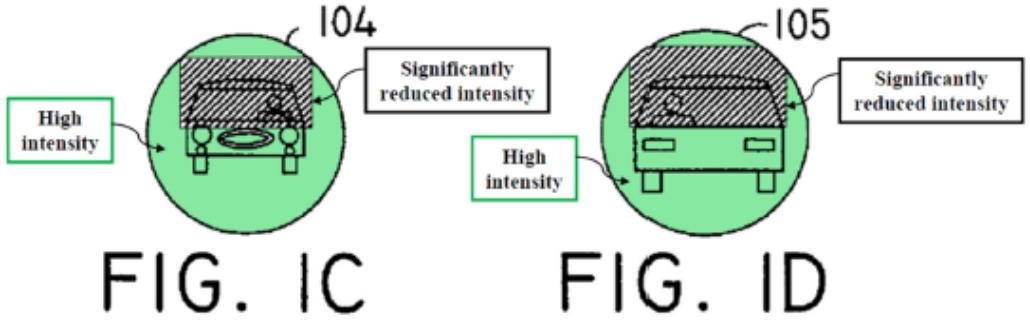

Beam, EX1005, FIGs. 1C, 1D (annotated).

processor **1105** via a bus **1112**. Processor **1105** uses appropriate algorithms on the incoming data to determine the locations to be blanked, and stores them in memory **1106**. While the next frame of data is being acquired, processor **1105** retrieves the location data and outputs blanking signals at the appropriate times, based on the contents of dot counter **1103** and line counter **1104**. The blanking signals are carried on blanking bus **1115** to spatial light modulator **203**. This commands the appropriate pixels to be reduced in intensity.

Beam, EX1005, 5:46-54.

Pet., pp. 43-46; POR, pp. 53; Turk Second Dec., EX2006, ¶¶173-174; Pet. Reply, pp. 20-21; Jiao Second Dec., EX1051, ¶¶78-83.

Beam's Headlight System Determines a Second Subsection Not Including the Detected Vehicle ([20.9]-[20.10])

Petitioner's [20.9] proofs for the second subsection also fail. With Annotated Figures 1C and 1D from Beam, Petitioner identifies what it considers to be the claimed second subsection. (Pet., 26; Ex.2006, ¶173.)

•••

Significantly, the "2nd subsection" identified in **both** annotated pictures, **plainly includes the second vehicle,** thus failing to meet the *at least a second subsection of the field-of-view* ***not including the other vehicle*** limitation in [20.9]. (Ex.2006, ¶174.) This failure cuts across **all** sub-grounds, 1A-1E, rendering Petitioner's proof of Claim 20 deficient for every sub-ground.

Patent Owner's Argument
POR, p. 53.

Pet., pp. 43-46; POR, p. 53; Turk Second Dec., EX2006, ¶¶173-174; Pet. Reply, pp. 20-21; Jiao Second Dec., EX1051, ¶¶78-83.

Beam's Headlight System Determines a Second Subsection Not Including the Detected Vehicle ([20.9]-[20.10])

78. Claim 20 recites a "second subsection not including the detected vehicle," without further specifying the boundary of the second subsection with respect to the first subsection of the field of view. EX1001, 98:10-14. A POSA would have understood from the plain language of claim 20 that the "second subsection" does not correspond to the remaining area of the field of view outside of the "first subsection."

Jiao Second Dec., EX1051, ¶78.

reproduced below. EX2006, ¶¶173-174. Dr. Turk mischaracterizes (presumably through lack of understanding) my annotated versions of Beam's Figures 1C and 1D by equating the remainder of the field of the view outside of the "reduced intensity" section to the recited "second subsection." EX2006, ¶174. My annotated Figures 1C-1D of Beam, however, show areas outside of the "reduced intensity" subsection (the first subsection) that do not include the vehicle.

Jiao Second Dec., EX1051, ¶80.

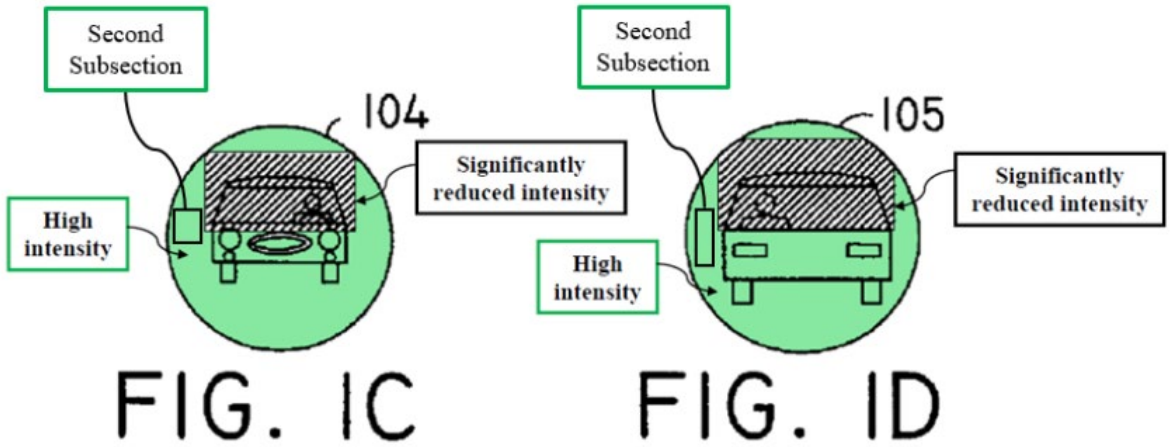

Beam, EX1005, FIGs. 1C, 1D
(annotations from p. 21 of Pet. Reply).

Pet. 43-46; POR, pp. 53; Turk Second Dec., EX2006, ¶¶173-174; Pet. Reply, pp. 20-21; Jiao Second Dec., EX1051, ¶¶78-83.

IPR2023-00197: Determining Light Output [59.8-59.9]

Beam-Thominet-Stam

IPR2023-00197
[59.8]-[59.9]: "**determine light output** for the headlight system **that aims illumination at the first subsection** … resulting in **light below a first predefined illuminance in the first subsection**"

Pet., pp. 58-61; POR, p. 52; Pet. Reply, pp. 21-22.

Beam's Headlight System Determines Light Output [59.8]

9. [59.8]

Beam discloses illumination in shaded areas is "*significantly less* than with current *low beams*." EX1005, 6:30-33, 2:59-3:3, FIGS. 1, 1C-1D, 7, Abstract, 4:20-25 ("*shaded areas* being *reduced significantly*"), 3:8-23; EX1003, ¶¶251-252. This "aims illumination at the first subsection" (shaded area) to prevent glare to other traffic. EX1003, ¶251.

Petition, p. 58.

equipped vehicle, and detected by a sensor **107**. Data from sensor **107** are input to a controller **108**, which uses them to determine which microbeams must be reduced in intensity to protect the other drivers. These data are used to control an

Beam, EX1005, 4:16-19.

cal system **106** to illuminate an area shown as **101**. The vehicles shown in various circles **104** and **105** correspond to the vehicles in circles **102** and **103** with the illumination in the shaded areas being reduced significantly to protect the vision of the oncoming drivers.

Beam, EX1005, 4:21-25.

While the next frame of data is being acquired, processor **1105** retrieves the location data and outputs blanking signals at the appropriate times, based on the contents of dot counter **1103** and line counter **1104**. The blanking signals are carried on blanking bus **1115** to spatial light modulator **203**. This commands the appropriate pixels to be reduced in intensity.

Beam, EX1005, 5:45-54.

Pet., pp. 51-52, 58-61; Jiao First Dec., EX1003, ¶253-254; POR, pp. 52, 57; Turk Second Dec., EX2006, ¶172; Pet. Reply, pp. 21-23; Jiao Second Dec., EX1051, ¶¶114-117.

Beam's Headlight System Determines Light Output [59.8]

subsection. (Pet., at 43; Ex.2006, ¶161.) Beam's pixel evaluation **determines whether to blank** the light source, which is distinct from **determining illumination**. (Ex.2006, ¶172.) By definition, the absence of light, is not illumination. The plain meaning of illumination is "the action of illuminating or

Patent Owner's Argument
POR, p. 52.

incorrect, failing to fully understand the teachings of Beam. When choosing to dim an area that includes the detected vehicle (the first subsection), Beam's controller 108 still determines a light output for the first subsection. EX1005, 5:33-6:9; EX1003, ¶¶253-254. Specifically, Beam's controller 108 determines to illuminate the first subsection at a level significantly less than current low beams. EX1005,

Jiao, Second Dec., EX1051, ¶115.

Pet., pp. 58-61; Jiao First Dec., EX1003, ¶¶253-254; POR, pp. 52, 57; Turk Second Dec., EX2006, ¶172; Pet. Reply, pp. 21-23; Jiao Second Dec., EX1051, ¶¶114-117.

Beam-Thominet-Stam's Headlight System Aims Light Below a First Predefined Illuminance at the First Subsection [59.9]

Beam discloses a "*default* illumination level will be the equivalent of today's *low beams*." EX1005, 6:30-33. Thus, Beam's system includes a "predefined" illuminance—a "low beam" illuminance. EX1003, ¶203. Further, illumination in shaded areas is "*significantly less* than with current *low beams*" (significantly reduced intensity in shaded area is *below* Beam's predefined *low beam* illuminance: shaded illuminance < low beam illuminance); and illumination in non-shaded areas is "at *maximum* intensity" and "like having bright *high beams*" (high intensity in non-shaded area is *above* Beam's predefined *low beam* illuminance: non-shaded illuminance > low beam illuminance). EX1005, 6:30-33, 2:59-3:3, 6:11-12, 6:40-44, FIGS. 1, 1C-1D; EX1003, ¶¶204-205.

Petition, pp. 51-52 (element [59.9]).

If Patent Owner argues, incorrectly, that Beam-Thominet does not disclose [59.9], Stam does. EX1003, ¶255.

Stam discloses laws and regulations limit the amount of glare experienced by drivers (a glare tolerance level or "perceived brightness") and "to *avoid* an illuminance of *0.1 foot candles (fc)* incident on another vehicle…high beam headlamps should be *dimmed within 700 feet* of another vehicle." EX1007, 1:27-32, Abstract, 1:14-31, 9:12-10:8, FIG. 11; EX1003, ¶256. Thus, Stam defines a "predefined" (dimmed) illuminance value: 0.1 fc within 700 ft (1.1 lux within 700 ft), corresponding to the "predefined illuminance." EX1003, ¶¶256-259. And a POSA would have been motivated to combine Stam with Beam-Thominet with a reasonable expectation of success. *Supra* Section VII.A; EX1003, ¶¶260-269.

Petition, p. 60 (element [59.9]).

Pet., pp. 51-52, 58-61; Jiao First Dec., EX1003, ¶¶253-254; POR, pp. 52, 57; Turk Second Dec., EX2006, ¶172; Pet. Reply, pp. 21-23; Jiao Second Dec., EX1051, ¶¶114-117.

Beam-Thominet-Stam's Headlight System Aims Light Below a First Predefined Illuminance at the First Subsection [59.9]

subsection" is actually determined. Beam, which utilizes a blanking strategy, provides no illumination directed at the "blanked area" because it either blocks lamp 202 emission towards that area via the SLM or changes LEDs responsible for that area to a non-emitting state. (Ex.1005, 4:36-40, 5:65-66; Ex.2006, ¶188.)

Patent Owner's Argument
POR, p. 57.

116. Furthermore, Dr. Turk's assertion that Beam's blanking strategy "provides no illumination directed at the 'blanked area'" is inaccurate and contradicted by Beam's disclosure. EX2006, ¶188. Dr. Turk fails to recognize that the blanked area corresponding to the detected vehicles is still illuminated but at "reduced significantly" compared to the remaining areas of the headlights' field-of-view. EX1005, 4:19-25. Beam describes that "the area of the beam that would

Jiao Second Dec., EX1051, ¶116.

Pet., pp. 58-61; Jiao First Dec., EX1003, ¶¶253-254; POR, pp. 52, 57; Turk Second Dec., EX2006, ¶172; Pet. Reply, pp. 21-23; Jiao Second Dec., EX1051, ¶¶114-117.

Motivation to Combine Stam with Beam-Thominet [59.8-59.9]

A POSA would have understood that a predefined value for Beam-Thominet's controller/illuminator based on Stam's predefined dimmed illuminance (0.1 fc within 700 ft), would have provided greater illumination control *referenced to* a predefined value to prevent glare and increase illumination to other areas, thereby improving driver safety. *Id.*, ¶266. This would have merely been applying

Petition, p. 54.

266. A POSA would have understood that additional control for Beam-Thominet's controller/illuminator from Stam's predefined dimmed illuminance, would have enhanced Beam-Thominet's system by providing more accurate illumination control referenced to a predefined value to prevent glare, thereby improving driver safety. Doing so would have merely been applying Stam's known

Jiao First Dec., EX1003, ¶266.

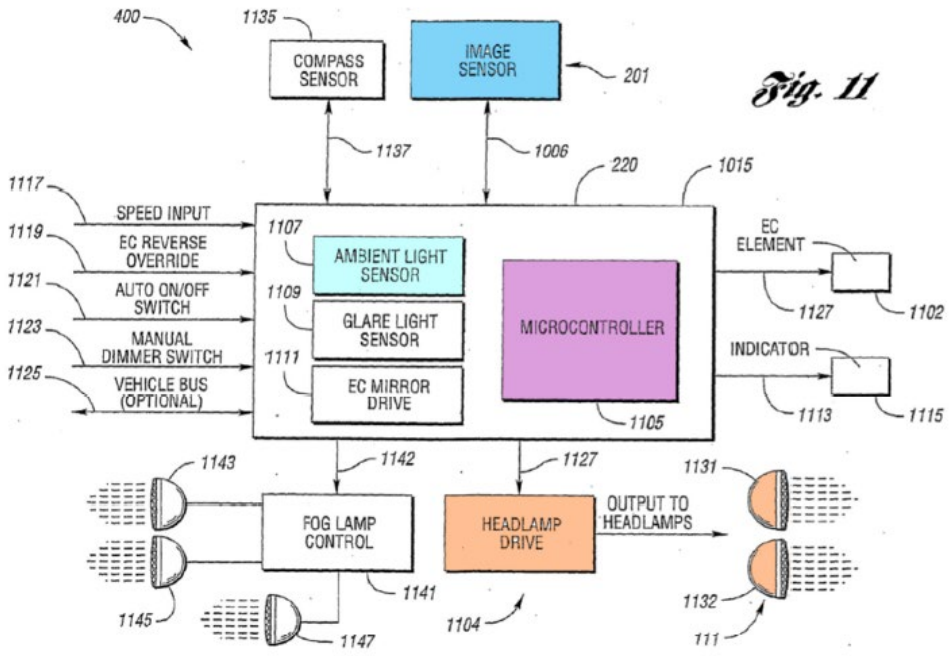

Stam, EX1007, FIG. 11 (annotated).

Pet., pp. 16, 52-55; Jiao First Dec., EX1003, ¶¶209-210, 262-270.

Motivation to Combine Stam with Beam-Thominet [59.8-59.9]

illuminance." (Ex.2006, ¶185.) By Petitioner's own admission, Beam alters the illumination pattern to blank or prevent illumination — mooting the purported need for Stam, as blanking is necessarily below a predefined illuminance. (Ex. 2006, ¶185.) Under the same rationale, because the first subsection is blanked,

Patent Owner's Argument
POR, p. 56.

117. Dr. Turk alleges that there would have been no motivation to combine Stam's predefined threshold with Beam's headlight system because Beam's blanking strategy eliminates the need for Stam's predefined illuminance. EX2006, ¶185. Dr. Turk again bases his argument on the inaccurate characterization that Beam's controller solely blanks microbeams without determining an illumination output for the area corresponding to the detected vehicle. But as I explained above in §VII.A, Beam's blanking of microbeams to prevent glare toward drivers includes the preceding processing steps of detecting vehicles and determining an area to be illuminated below low beam. A POSA would have understood that implementing clarified or quantitative predefined dimmed illuminance level in the combined Beam-Thominet system, as in Stam, would ensure that the light output remains lower, furthering Beam's goal of reducing glare.

Jiao Second Dec., EX1051, ¶117.

Pet., pp. 58-61; Jiao First Dec., EX1003, ¶253-254; POR, pp. 52, 57; Turk Second Dec., EX2006, ¶172; Pet. Reply, pp. 21-22; Jiao Second Dec., EX1051, ¶¶114-117.

IPR2023-00197: Reflectors or Lenses (Claims 25/64)

IPR2023-00197			
Claim	Language	Claim	Language
25	wherein at least one of the one or more headlamps further includes at least one of **reflectors**, refractors, **or lenses** usable to alter emitted light from at least one of the light sources.	**64**	wherein at least one of the one or more headlamps further includes at least one of **reflectors**, refractors, **or lenses** usable to alter the light emitted from at least one of the light sources **as part of the instructed adjustment**.

Pet., pp. 50-51, 64, 112-113; POR, pp. 26-30, 54; Pet. Reply, pp. 28-29.

Karlsson Discloses Reflectors or Lens (Claims 25/64)

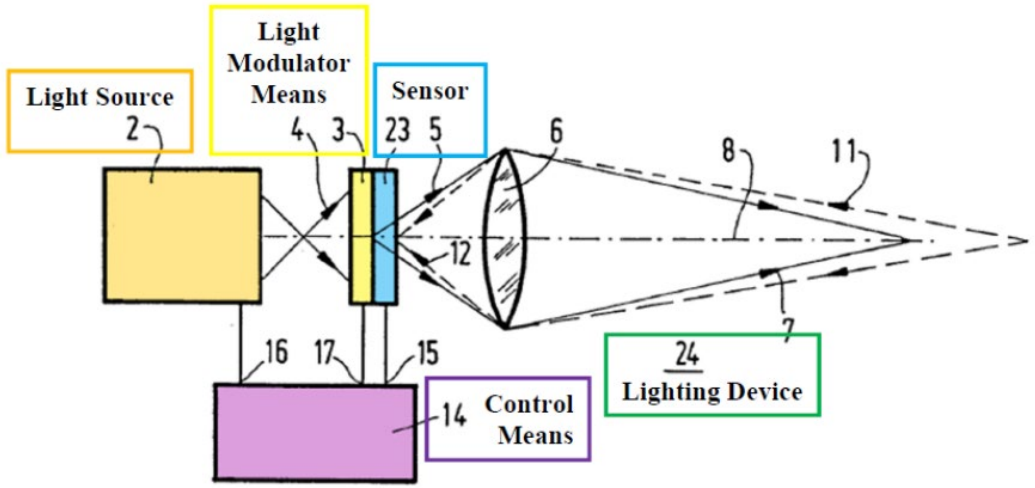

Karlsson, EX1010, FIG. 3 (annotated).

Karlsson discloses "light modulator means…of a type which *reflects light… 'Micro Mirrors'*." EX1010, 5:7-15, FIGS. 1, 3, 8:15-17 ("a *lens 6*, which forms light 5 into a desired emitted light beam 7"), 8:27-35 ("*lenses 6, 10*"), Abstract, 5:11-15, 9:3-33, 10:32-11:1, 11:7-28; EX1003, ¶¶435-438.

Petition, p. 112.

According to the invention, the spotlight beams may also be advantageously made up of light modulator means, which are spatially distributed in such a manner that spotlight beams are formed from the light received by the light modulator means. The light modulator means, which may be of a type which transmits light or of a type which reflects light, are switched in such a manner during operation that the desired beam pattern is obtained.

Karlsson, EX1010, 5:4-10.

Pet., p. 112-113; POR, pp. 26-29; Pet. Reply, pp. 28-30; Jiao Second Dec., EX1051, ¶169.

Beam Discloses Reflectors or Lens (Claims 25/64)

Beam discloses "a *spatial light modulator*…digital mirror devices" and "an optical system 106" (e.g., a bi-convex lens). EX1005, 8:4-12, FIGS. 2, 5, 1:63-65 ("a *reflector* or *lens*"), 4:10-59 ("*reflected* by a *beamsplitter 201*"), 5:17-21; EX1003, ¶¶199-201.

Petition, pp. 50-51.

51; Ex.2006, ¶178.) Petitioner's arguments regarding claim 25 fails for at least two reasons: 1) as explained in Grounds 1A-1E of Section VI.A and contrary to Petitioner's assertions, none of the LED combinations include an SLM; and 2) beamsplitter 201 does not output reflected light, but rather prevents certain microbeams from exiting the headlamp to facilitate blanking. (Ex. 2006, ¶179.)

Patent Owner's Argument, POR, pp. 53-54.

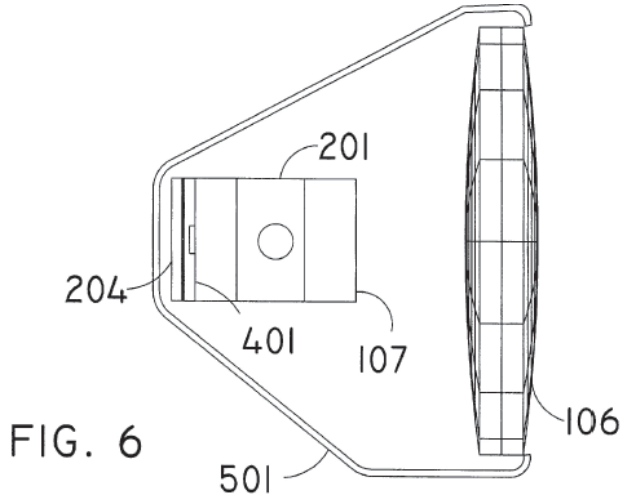

FIG. 6

4. The anti-blinding illumination system as set forth in claim **1** wherein said light source includes an array of individual, independently controllable microbeam sources selected from the group consisting of light-emitting diodes, lasers, incandescent lamps, arc lamps and electroluminescent lamps, and a spatial light modulator selected from the group consisting of digital mirror devices, liquid crystal devices, and grating light valves for selectively controlling the intensity of individual microbeam sources in said array.

Beam, EX1005, FIG. 6, claim 4.

Pet. Pet., pp. 50-51, 64; POR, pp. 53-54; Pet. Reply, pp. 28-29; Jiao Second Dec., EX1051, ¶¶50-57, 108-109.

IPR2023-00197: Road Curvature Claims (Claims 21-23/60-62)

IPR2023-00197			
Claim	Language	Claim	Language
21	wherein the processor is further configured to determine at least a road curvature …and to direct the control circuitry to adjust the directional light sources to **increase illumination in a direction of the road curvature**.	**60**	wherein at least one of the at least one processors is further configured to determine at least a road curvature … and to determine light output that **aims illumination in a direction of the road curvature**.
22/23	wherein the processor is further configured to determine at least a planned upcoming turn … and to direct the control circuitry to **increase illumination illuminating the turn.**	**61/62**	wherein at least one of the at least one processors is further configured to determine at least a planned upcoming turn … and to determine light output that **illuminates the turn**.

Pet., pp. 64-76, 113-126; POR, pp. 58-61; Pet. Reply, pp. 25-26.

IPR2023-00197: Road Curvature Claims (Claims 21-23/60-62)

Kobayashi (combined with Beam et al.) and Gotou (combined with Karlsson et al.) both disclose increasing illumination in a direction of a road curvature / turn

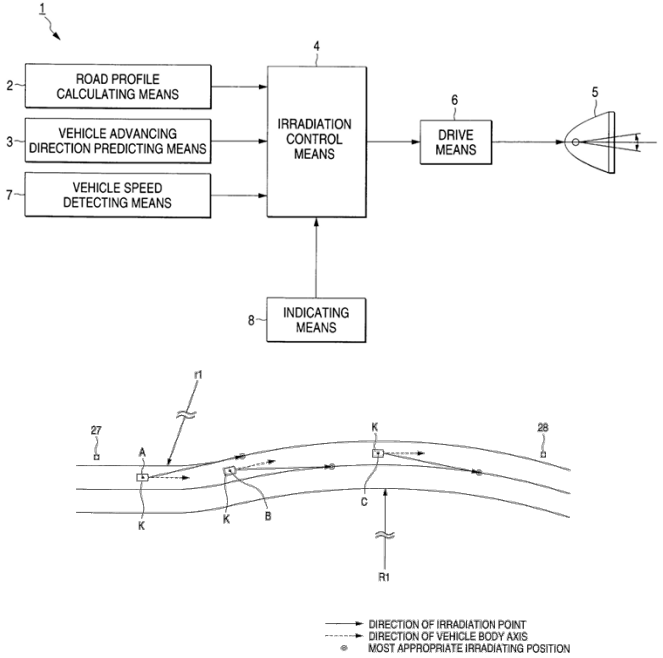

Kobayashi, EX1008, FIGs. 1, 10.

FIG. 8

FIG. 9

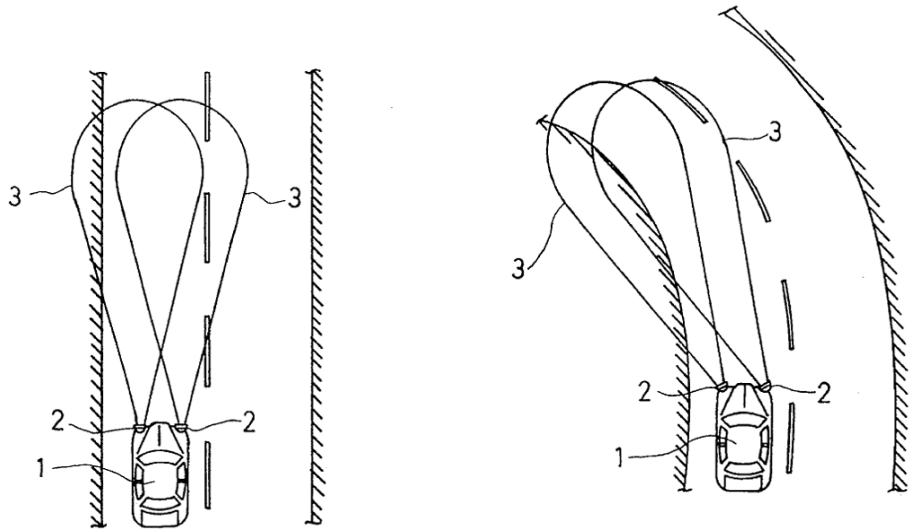

Gotou, EX1012, FIGs. 8, 9.

Pet., pp. 64-76, 113-126; Jiao First Dec., EX1003, ¶¶296-331, 439-469; POR, pp. 59-60, 73; Pet. Reply, pp. 25-27.

Dr. Turk Is Indisputably Not a POSA: Motion to Exclude

The Federal Circuit's *Kyocera* Precedent Is Directly on Point Here

Dr. Turk's "expert testimony on issues from the vantage point of an ordinarily skilled artisan" must be excluded because Dr. Turk does not "possess ordinary skill in the art." *Kyocera*, 22 F.4th at 1377. The Federal Circuit's decision in *Kyocera* illustrates this principle and governs the outcome here.

Pet. Motion to Exclude, p. 12.

Pet. MTE, pp. 1-15; Pet. Reply, pp. 2-5; Jiao Second Dec., EX1051, ¶¶10-49.

The Parties Agreed on the POSA Definition

The Board adopted the POSA definition in this case requires "2 years of industry experience **in the area of automotive lighting and lighting-control systems.**"

Petition, p. 9 (annotated).

For the '503 patent, a POSA at the time[3] of the alleged invention would have had a bachelor's degree (B.S.) in mechanical engineering, electrical engineering, optical engineering, applied physics, or an equivalent field, as well as at least 2 years of industry experience in the area of automotive lighting and lighting-control systems. The POSA may work as part of a team, for example, with computer engineers to integrate, program, etc., controllers and various control inputs to affect control of a given light source. EX1003, ¶¶42-44.

POR, p. 14 (annotated).

IV. Level of ordinary skill

Patent Owner does not dispute the Board's reframing of Petitioner's proposed level of ordinary skill; the modification should have no effect on the analysis. (*See* Pet. at 9.)

Pet. MTE, pp. 1-15; Pet. Reply, pp. 2-5; Jiao Second Dec., EX1051, ¶¶10-49; PO Sur-Reply, pp. 1-3.

Dr. Jiao and Dr. Turk Agreed on the POSA Definition

Everyone agrees that the POSA definition in this case requires "2 years of industry experience **in the area of automotive lighting and lighting-control systems.**"

Jiao First Dec., EX1003, ¶42.

42. In my opinion, a POSA in the context of the '503 patent as of July 12, 2002 (the earliest possible priority date of the '503 patent)[2] would have had a bachelor of science (B.S.) degree in mechanical engineering, electrical engineering, optical engineering, applied physics, or an equivalent field, as well as at least 2 years of industry experience in the area of automotive lighting and lighting-control systems. The POSA may work as part of a team, for example, with computer engineers to integrate, program, etc., controllers and various control inputs to affect control of a given light source.

Turk Dep., EX1052, 21:14-23.

Q. That's fair. Let me phrase it this way: Is the level of ordinary skill in paragraph 57 the level of skill that you applied when analyzing and understanding the '503 patent claims and the prior art applied in the three proceedings that we're discussing today?

A. Yes.

Q. And you agree that is the appropriate level of ordinary skill?

A. For this IPR case, yes.

Pet., p. 9; Pet. MTE, pp. 1-15; Pet. Reply, pp. 2-5; Jiao Second Dec., EX1051, ¶¶10-49; PO Sur-Reply, pp. 1-3.

Dr. Turk Is Not a POSA

Dr. Turk does not have "2 years of industry experience
in the area of automotive lighting and lighting-control systems."

POSA mirrors Dr. Jiao. Through the lens of this narrow interpretation, Petitioner dismisses the impact of Dr. Turk's PhD, 20+ years of experience with optics and sensing/imaging, and three years of experience designing an autonomous vehicle system where vehicle lighting and lighting control systems played "an important part." (Ex.1054, 53:4-54:8.) Under Petitioner's *full* POSA definition, Dr. Turk is, without question, a POSA.

Patent Owner's Argument,
PO Sur-Reply, p. 2 (annotated).

Pet. MTE, pp. 1-15; Pet. Reply, pp. 2-5; Jiao Second Dec., EX1051, ¶¶10-49; PO Sur-Reply, pp. 1-3.

Dr. Turk Is Not a POSA

28. These incorrect statements and misunderstandings in Dr. Turk's declarations and depositions, along with the dearth of experience in the field reflected on his CV, convince me that he is not a POSA, and does not understand fundamentals in automotive lighting and lighting control with no knowledge of basic concepts, lighting principles, lighting metrics and measurements, lighting regulations and standards, which a POSA would have. The examples include the basic terms of "intensity," "brightness," high beam, low beam, and other automotive lighting devices and their well-defined functions and requirements, how those lighting devices are optically combined, and other basic and commonly used terms that a POSA would readily understand. He does not understand how a POSA would go about measuring such lighting quantities (e.g., in development or under certain regulations, EX1054, 103:22-108:14, 150:23-156:3), or what a POSA would have found obvious to combine with respect to the applied references discussed here and in my First Declaration, EX1003.

Jiao Second Dec., EX1051, ¶28.

Tellingly, Dr. Turk also admitted that he has no experience in the field of automotive lighting, lighting control, general lighting, light measurements, and lighting device development, design, process, testing, standard, and regulation compliance. EX1054, 52:18-53:1. He never worked for a vehicle headlamp company, never worked for an LED (or any other light source) company or for a general lighting company, never designed a vehicle forward lighting system, and has no patents, awards, or papers for any vehicle forward lighting. *Id.*, 54:24-56:12. The record demonstrates that Dr. Turk lacks the knowledge that a POSA with two years of industry experience in the area of automotive lighting and lighting-control systems would have, so his declarations should be excluded.

Pet. MTE, p. 8.

Pet. MTE, pp. 1-15; Pet. Reply, pp. 2-5; Jiao Second Dec., EX1051, ¶¶10-49; PO Sur-Reply, pp. 1-3.

Dr. Turk Is Not a POSA

Dr. Turk does not have "2 years of industry experience
in the area of automotive lighting and lighting-control systems."

Q. Did you personally work on the illumination portion of that project?

A. I did at times.

Q. And what did you specifically work on with regards to the illumination?

A. It was a long time ago and I don't remember too much detail about it, but certainly an important question was how much and what kind of illumination was necessary to be able to do what we needed to do.

Turk Dep., EX1054, 54:9-15.

1984-87	**Martin Marietta Denver Aerospace**	Denver, CO
	Senior Engineer Research in vision algorithm development and implementation for mobile robot navigation (DARPA Autonomous Land Vehicle program).	

Turk CV, EX2002, pp. 3-4.

Pet. MTE, pp. 1-15; Pet. Reply, pp. 1-5; Jiao Second Dec., EX1051, ¶¶10-49; PO Sur-Reply, pp. 1-3.

Motion to Exclude: Dr. Turk Is Not a POSA

Dr. Turk does not have "2 years of industry experience
in the area of automotive lighting and lighting-control systems."

1984-87 **Martin Marietta Denver Aerospace** Denver, CO

Senior Engineer
Research in vision algorithm development and implementation for mobile robot navigation (DARPA Autonomous Land Vehicle program).

Turk CV, EX2002, pp. 3-4.

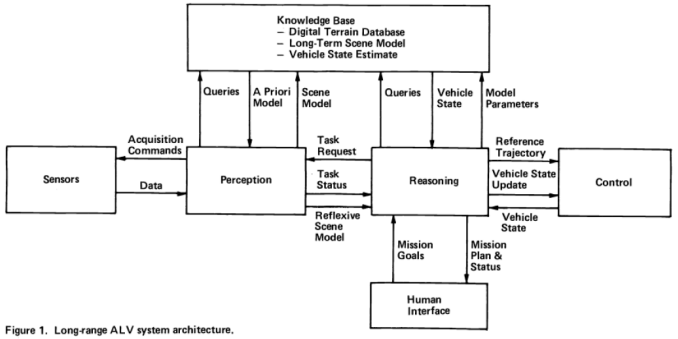

Figure 1. Long-range ALV system architecture.

EX1064, FIG. 1.

43. Indeed, a paper co-authored by Dr. Turk shows a figure of the project installed over "a drive chassis supplied by Standard Manufacturing," and notes that "[t]his physical platform is considered to be sufficient to support the electronics for all projected demonstrations and experiments." EX1064, 338.

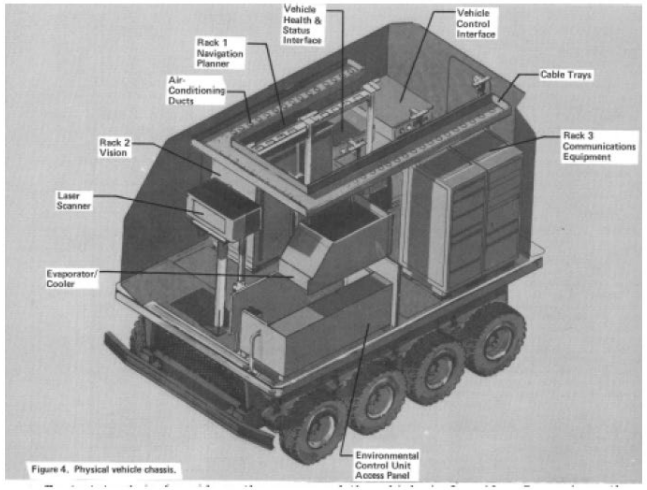

Figure 4. Physical vehicle chassis.

EX1064, FIG. 4.

EX1051, ¶43.

Pet. MTE, pp. 1-15; Pet. Reply, pp. 1-5; Jiao Second Dec., EX1051, ¶¶10-49; PO Sur-Reply, pp. 1-3.

Motion to Exclude: Dr. Turk Is Not a POSA

Petitioner:

D. Level of Ordinary Skill in the Art

For the '503 patent, a POSA at the time[3] of the alleged invention would have had a bachelor's degree (B.S.) in mechanical engineering, electrical engineering, optical engineering, applied physics, or an equivalent field, as well as at least 2 years of industry experience in the area of automotive lighting and lighting-control systems. The POSA may work as part of a team, for example, with computer engineers to integrate, program, etc., controllers and various control inputs to affect control of a given light source. EX1003, ¶¶42-44.

Petition, p. 9.

Kyocera:

I. Dr. Pratt's Testimony

During claim construction, the ALJ adopted Koki's definition of a skilled artisan:

> A person of ordinary skill in the art relevant to the Asserted Patents would have either (i) a Master's Degree in mechanical engineering with at least two years of *experience in power nailer design*; (ii) a Bachelor's Degree in mechanical engineering with at least five years of *experience in powered nailer design*; or, (iii) ten or more years of *experience in powered nailer design*. This experience in powered nailer design would include mechanical design, tool design, manufacturing, mechanics of materials, stress analysis, ergonomics, and human factors.

J.A. 1476 (emphases added). That definition requires, at minimum, two years' experience designing power nailers. In

Kyocera Senco Indus. Tools Inc. v. Int'l Trade Comm'n, 22 F.4th 1369, 1375-76 (Fed. Cir. 2022).

Pet. MTE, pp. 1-15; PO Opp. to MTE, pp. 1-2.

Motion to Exclude: Dr. Turk Is Not a POSA

Dr. Turk's testimony demonstrates his lack of knowledge of common terms and concepts in the art. For example, during deposition for this proceeding, Dr. Turk was unfamiliar with how headlight beam patterns are adjusted according to different driving conditions—common concepts that would have been readily known by a POSA. *See* EX1052, 108:5-11, 113:15-114:1, 114:24-115:14, 126:6-15. Indeed, he even stated that, *in general*, he does not know what a person of ordinary skill in the art wants to do—the inquiry could end there:

Pet. MTE, pp. 8-9.

Q. Would a person skilled in the art want to adapt the light intensity of the headlamp on an illuminated urban road differently from an unilluminated country road?

MR. TURNER: Objection. Vague. Calls for speculation. Incomplete hypothetical.

THE WITNESS: In general, I don't know what a person of ordinary skill in the art wants to do, so that question seems too broad for me to address.

Turk Depo. Transcript, EX1052, 126:6-15.

Pet. MTE, pp. 1-15; PO Opp. to MTE, pp. 1-2.

Volkswagen Group of America, Inc. & Porsche Cars North America, Inc.
v.
Yechezkal Evan Spero

IPR2023-00328, IPR2023-01320
U.S. Patent No. 10,894,503

VOLKSWAGEN

GROUP OF AMERICA

Petitioner's Demonstratives

IPR2023-00328: Agenda (Independent Claims 26/65)

1. A POSA would have been motivated to combine: 1) Harbers's curved substrate with Karlsson; and 2) Thominet's curved substrate with Beam.
2. Beam-Thominet discloses a headlight system that determines illumination "for at least a second subsection of the field-of-view not including the other vehicle." [26.5]
3. **Karlsson-Harbers** and Beam-Thominet-Stam disclose a headlight system that determines an illumination level that "substantially illuminates the first subsection below a predefined illuminance." [26.4-26.6]/[65.3-65.6]
4. The Karlsson-Harbers and Beam-Thominet grounds render obvious all dependent claims:
   - Road curvature claims,
   - **Yellowish/blueish illumination and fog/snow claims, and**
   - **Third subsection/spotlighting for pedestrian/sign claims.**

POR, pp. 20-77.

IPR2023-00328: ’503 Patent – Independent Claim 26

Issued Claim 26	Limitation	Issued Claim 26	Limitation
26.P	A method for generating a headlight beam in an adaptive headlight system that provides illumination to at least a portion of a field-of-view, comprising:	**26.6**	determining a control strategy for controlling one or more directional light clusters in a headlight assembly to create an output headlight beam meeting the determined illumination requirements,
26.1	utilizing one or more sensors of a vehicle including the adaptive headlight system to obtain and provide data	26.7	the headlight beam spatial light distribution shaped to provide high beam illumination for a driver of the vehicle, in at least the second subsection,
26.2	predefined as relevant to a determination of illumination requirements for the field-of-view, the data including data indicative of at least one of one or more other vehicles or a pedestrian;	26.8	while mitigating glaring light illuminating at least the first subsection including detected other vehicles or pedestrians;
26.3	determining illumination requirements for the field-of-view based on the data sensed by the sensors,	26.9	sending control signals implementing the control strategy to an electronic control circuitry configured to operate the light-clusters; and
26.4	including determining illumination for at least a first subsection of the field-of-view including the other vehicle or pedestrian, as indicated by the sensor data, and including determining illumination for at least a first subsection of the field-of-view including the other vehicle or pedestrian, as indicated by the sensor data, and	26.10	controlling the light clusters via the electronic control circuitry to collectively emit the headlight beam meeting the determined illumination requirements.
26.5	for at least a second subsection of the field-of-view not including the other vehicle or pedestrian;		

Pet., pp. 17-35, 86-106.

IPR2023-00328: ’503 Patent – Independent Claim 65

Issued Claim 65	Limitation	Issued Claim 65	Limitation
65.P	A method for generating a headlight beam in an adaptive headlight system that provides illumination to at least a portion of a field-of-view, comprising:	**65.6**	that substantially illuminates the first subsection below a predefined illuminance, and
65.1	utilizing one or more sensors of a first vehicle to obtain and provide data,	65.7	determining an illumination level for the one or more second subsections
65.2	the data including data indicating at least a second vehicle;	65.8	that substantially illuminates the one or more second subsections above the predefined illuminance;
65.3	determining illumination for at least a first subsection including the second vehicle and	65.9	determining control instructions for controlling one or more directional light sources included in the adaptive headlight system to achieve the determined illumination levels for at least the first and one or more second subsections; and
65.4	at least one or more second subsections, to either side of the first subsection,	65.10	controlling the light sources to emit the headlight beam in accordance with the control instructions.
65.5	including determining an illumination level for the first subsection		

Pet., pp. 42-52, 86-106.

IPR2023-00328: Motivation to Combine Karlsson-Harbers and Beam-Thominet

Karlsson-Harbers and Beam-Thominet are combined for at least the same reasons as applied in the -197 proceeding.

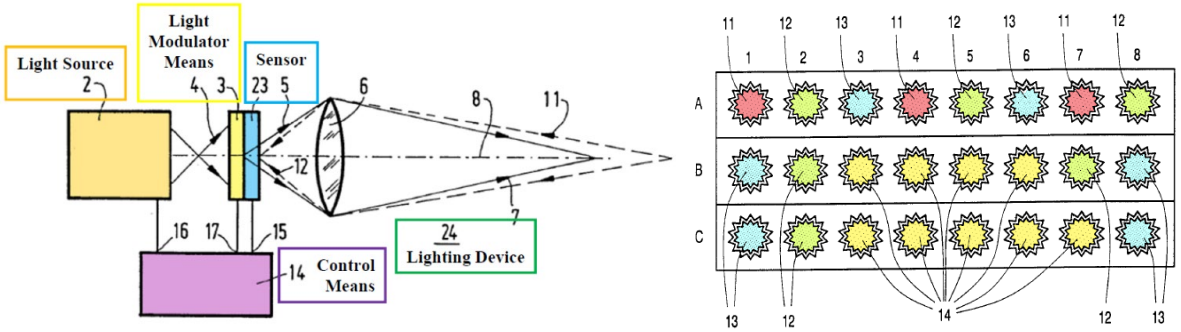

Karlsson, EX1010, FIG. 3, (annotated).
Harbers, EX1011, FIG. 2 (annotated).

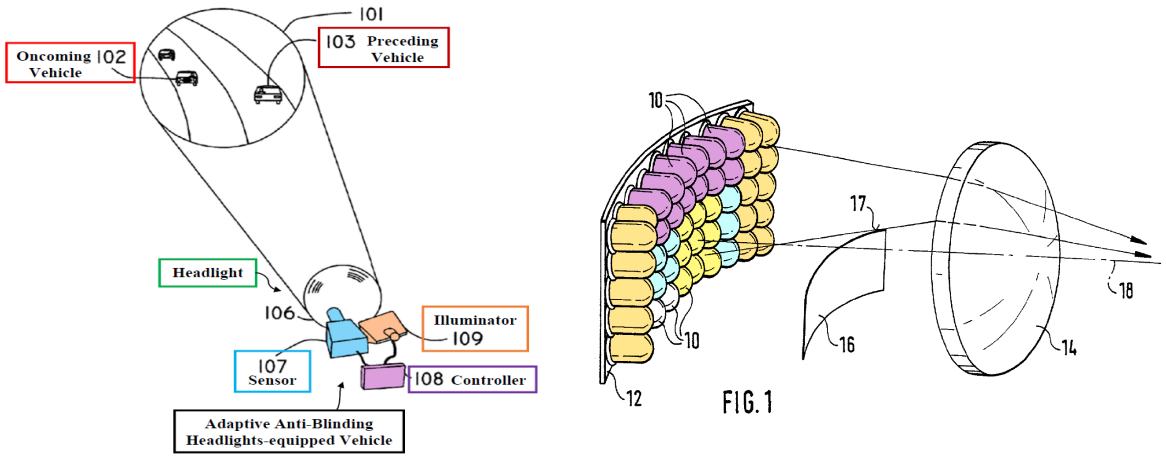

Beam, EX1005, FIG. 1 (annotated).
Thominet, EX1006, FIG. 1 (annotated).

Pet., pp. 10-17, 81-86; Jiao First Dec., EX1003, ¶¶121-139, 445-460; POR, pp. 22-39; Pet. Reply, pp. 12-18; Jiao Second Dec., EX1051, ¶¶75-95, 135-148.

IPR2023-00328: One or More Directional Light Clusters/Sources ([26.6]/[65.9])

IPR2023-00197		IPR2023-00328	
[20.2]: "each headlamp including at least **three directional light sources aimed at different angles** relative to the vehicle"	**[59.2]:** "each headlamp including at least three directional **light sources having different aimings** relative to the first vehicle"	**[26.6]**: "determining a control strategy for controlling **one or more directional light clusters** in a headlight assembly to create an output headlight beam …"	**[65.9]**: "determining control instructions for controlling **one or more directional light sources** included in the adaptive headlight system to achieve the determined illumination levels …"

Pet., pp. 23-25, 49, 78, 96-102, 115-117; Jiao First Dec., EX1003, ¶¶157-165, 489-496.

IPR2023-00328: One or More Directional Light Clusters/Sources ([26.6]/[65.9])

Karlsson-Harbers and Beam-Thominet disclose directional light clusters/sources for the same reasons as applied to claim element [20.2] in the -197 proceeding.

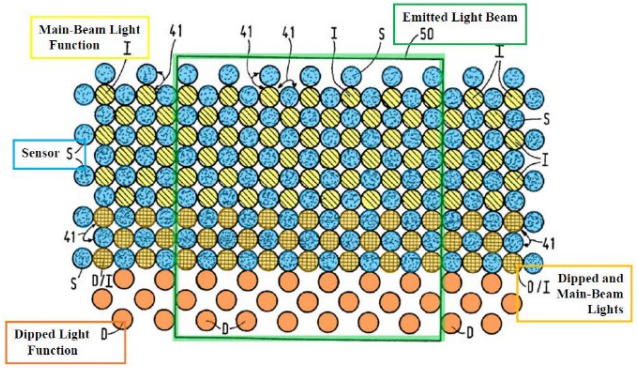

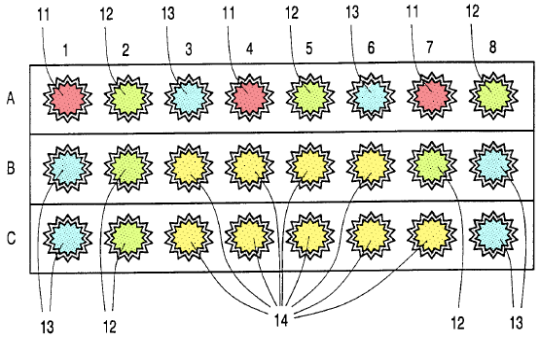

Karlsson, EX1010, FIG. 14 (annotated).
Harbers, EX1011, FIG. 2 (annotated).

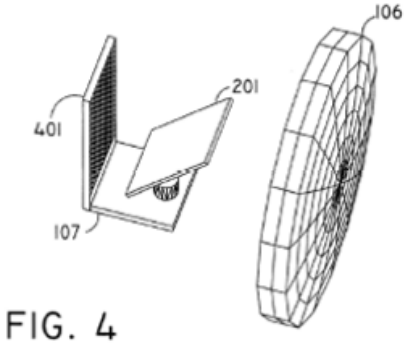

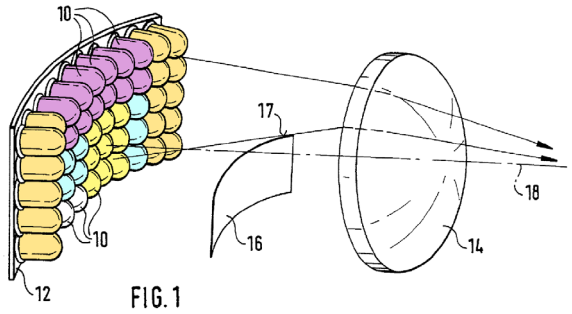

Beam, EX1005, FIG. 4.
Thominet, EX1006, FIG. 1 (annotated).

Pet., pp. 27-31, 49, 78, 96-102, 115-117; Jiao First Dec., EX1003, ¶¶157-165, 489-496.

IPR2023-00328: Second Subsection Not Including the Detected Vehicle ([26.4]-[26.5])

IPR2023-00197	IPR2023-00328
[20.9]-[20.10]: "the processor …configured to: process the sensor data to determine … at least **a second subsection not including the detected vehicle**"	**[26.4]-[26.5]**: "determining illumination … for at least **a second subsection of the field-of-view not including the other vehicle**,"

Pet., pp. 23-27; POR, pp. 41; Pet. Reply, pp. 7-8.

IPR2023-00328: Second Subsection Not Including the Detected Vehicle ([26.4]-[26.5])

Beam-Thominet discloses the second subsection for the same reasons as applied to claim elements [20.9]-[20.10] in the -197 proceeding.

Beam discloses determining illumination for a second subsection (without the vehicle) by providing "*higher brightness beam* in the areas which *do not dazzle* the drivers ahead" and "the area…that would dazzle the driver will be darkened, *while maintaining f[u]ll intensity elsewhere*." EX1005, 3:19-24, 2:59-3:3, FIGS. 1, 1C-1D, 7, 6:40-44, 6:11-12, 1:5-18; EX1003, ¶¶154-156.

Petition, p. 25.

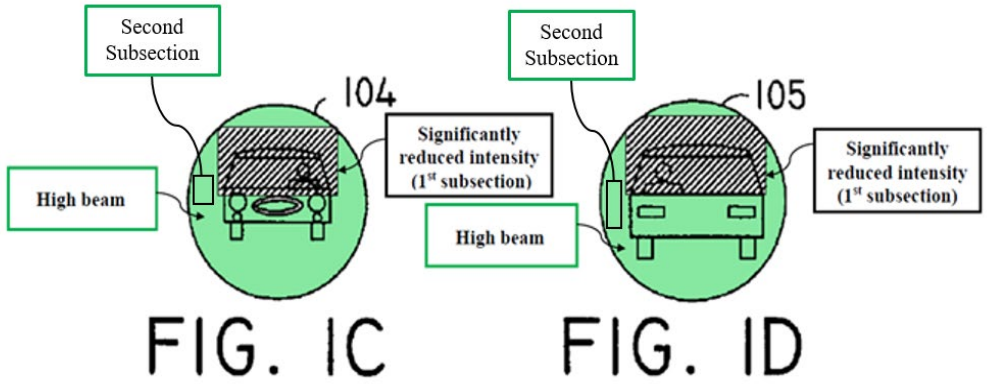

Beam, EX1005, FIGs. 1C, 1D (annotations from Pet. Reply, p. 8)

PO/Dr. Turk ignore the areas that *do not include a vehicle*, as explained in the Petition. *Compare* EX2006, ¶¶175-176; POR, 41 *with* Pet., 25-26; EX1003, ¶¶154-156; EX1005, 6:12-27. That is, any area *within* the green-highlighted section that does *not* include a vehicle corresponds to a "second subsection" (examples below). EX1051, ¶71.

Pet. Reply, p. 8.

Pet., pp. 23-27; POR, p. 41; Turk Second Dec., EX2006, ¶¶175-176; Pet. Reply, pp. 7-8; Second Jiao Dec., EX1051, ¶¶66-71.

IPR2023-00328: Determining Illumination for a First Subsection to Meet Illumination Requirements ([26.4]-[26.6]) and to Illuminate Below a Predefined Illuminance ([65.3]-[65.6])

IPR2023-00197	IPR2023-00328	
[59.8]-[59.9]: "**determine light output** for the headlight system that aims illumination at the first subsection … resulting in **light below a first predefined illuminance in the first subsection**"	**[26.4]-[26.6]**: "including **determining illumination** for at least **a first subsection** of the field-of-view including the other vehicle … **create an output headlight beam meeting the determined illumination requirements**"	**[65.3]-[65.6]**: "determining illumination for at least a first subsection including … **determining an illumination level** for the first subsection that substantially **illuminates the first subsection below a predefined illuminance**,"

Pet., pp. 23-31, 43, 91-102; POR, pp. 40, 58-64; Pet. Reply, pp. 6-7, 10-12.

Karlsson's Headlight System Determines Illumination for a First Subsection ([26.4]/[65.3])

The features of [65.3] are included in [26.4]. EX1003, ¶¶478-480. Karlsson discloses "*incident light 11* on the *light-sensitive sensor 9*…[is] input 15 of the *control means 14*" and "light beam 7…controlled in such a manner that *no light at all or light having a low intensity* is emitted in…directions from which light is detected." EX1010, 9:6-26, FIGS. 3, 14-15, 23:17-22, 5:16-23, 5:28-32, 2:7-9, 3:27-31, 14:26-30, 17:21-24, 20:12-32, 21:36-22:4; EX1003, ¶481. Thus, the processor processes the inputted incident light data, identifies a vehicle within the headlight's field-of-view, and determines an area to be suppressed within a subsection of the field-of-view (e.g., shaded area with no intensity). EX1010, 9:9-17, 12:19-24, FIGS. 14-15; EX1003, ¶¶481-482.

Petition, pp. 92-93.

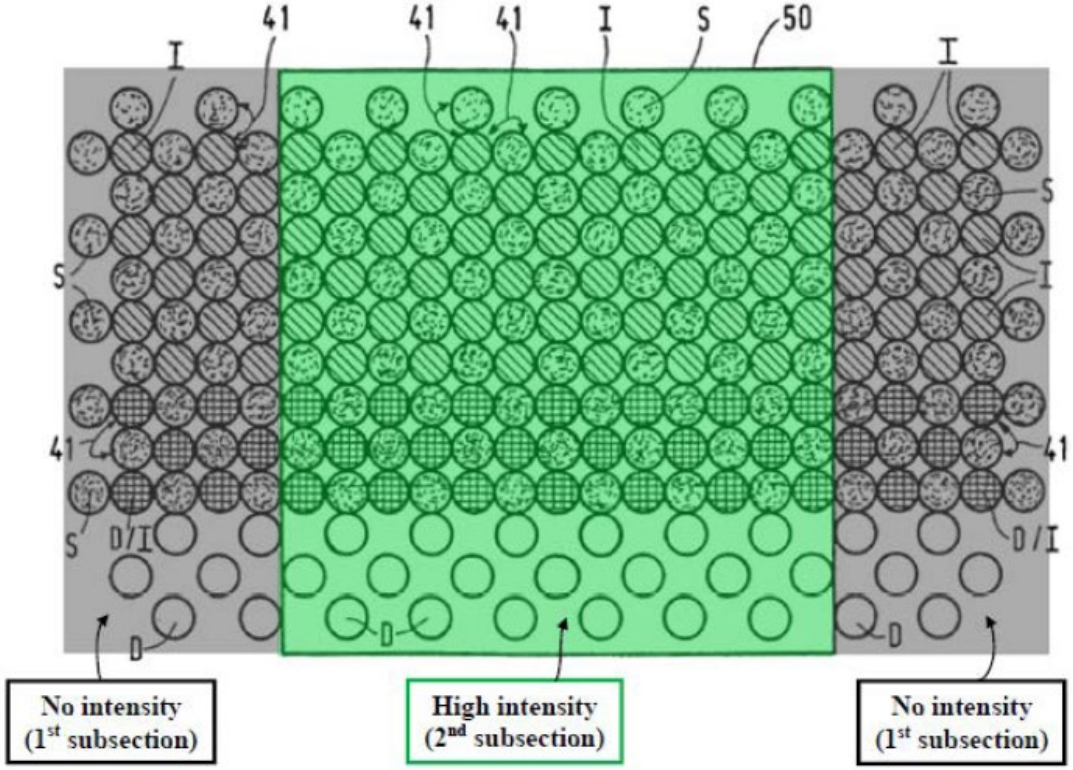

Karlsson, EX1010, FIG. 14 (annotated).

Pet., pp. 91-102; Jiao First Dec., EX1003, ¶¶478-495; POR, pp. 58-64; Turk Second Dec., ¶¶259-279; Pet. Reply, pp. 10-12; Jiao Second Dec., EX1051, ¶¶124-129.

Karlsson's Headlight System Illuminates the First Subsection to Meet Illumination Requirements ([26.6]) and Below a Predefined Illuminance ([65.6])

7. [26.6]

Karlsson discloses [26.6]. *Supra* Sections XII/XII.A/XII.B.5/XII.B.6; EX1003, ¶¶488-489. Karlsson's control means determines a control strategy (e.g., control signal) to "selectively adjust the light *intensity* of a respective spotlight beam 34, in response to a *control signal* from sensor means 23, so as to provide a desired lighting pattern." EX1010, 14:26-30, FIGS. 3, 14-15, 9:6-26, 23:17-22, 5:28-32, 17:21-24, 20:12-32, 21:36-22:4, 2:7-9, 3:27-31; EX1003, ¶489. Thus, Karlsson's controller determines a control strategy for controlling the direction and illumination of spotlight beams to "create an output headlight beam meeting the determined illumination requirements." EX1010, 9:9-17, 12:19-24, FIGS. 14-15; EX1003, ¶489.

Petition, p. 96.

2. [65.6]

Karlsson discloses [65.6]. *Supra* Section XII; EX1003, ¶¶528-529; EX1010, 19:24-27, 1:27-29, 9:9-26, 2:7-9, 14:26-30, 5:16-32, 20:12-32, 21:36-22:4, Abstract, FIGS. 3, 14-15. A POSA would have understood that Karlsson's headlight includes a "predefined" illuminance, for example, a "dipped" illuminance. EX1003, ¶529.

The first subsection (shaded area, e.g., outside emitted light beam 50) is illuminated "below a first predefined illuminance" because it receives "no light at all or light having a low intensity," which is *below* the dipped illuminance. EX1003, ¶¶530-531; EX1010, 9:19-26, FIG. 14.

Petition, p. 109.

Pet., pp. 91-102; Jiao First Dec., EX1003, ¶¶478-495; POR, pp. 58-64; Turk Second Dec., ¶¶259-279; Pet. Reply, pp. 10-12; Jiao Second Dec., EX1051, ¶¶124-129.

Karlsson's Headlight System Determines Illumination for a First Subsection to Meet Illumination Requirements ([26.4]-[26.6]) and to Illuminate Below a Predefined Illuminance ([65.3]-[65.6])

260. Petitioner contends that Fig. 14 is a functional representation of the actual operation of Karlsson in the presence of detected light, stating that "the shaded subsections below are "no/low intensity" sections **that correspond to detected light**. (Petition, 80.) That is, these are not merely electively unused areas, they are, by Petitioner's contention, "shaded areas (outside emitted light beam 50) – [where] 'no light or light having a low intensity is emitted **in those directions from which light is detected**.'" (*Id.*) Karlsson, however, does not actually say this with respect to Fig. 14.

Patent Owner's Argument,
Turk Second Dec., EX2006, ¶¶260-261.

The emitted light beam 50 is represented as a window which can shift in the plane of the drawings from the left to the right and from the top to the bottom, if desired, and vice versa, and which may vary as regards its shape and dimension in dependence on the desired pattern and direction of the beam.

Karlsson, EX1010, 19:29-34.

126. Karlsson's controller 14 of the headlamp system receives an input 15 from light-sensitive sensor 9 corresponding to detection of incident light 11. EX1010, 9:9-18. Karlsson's sensor 9 detects "light from oncoming traffic as a parameter to which the pattern of the emitted light beam is to be adjusted." EX1010, 5:16-19. Karlsson describes that light beam 7 is "controlled in such a manner that … light having a low intensity is emitted in those directions from which light is detected by the light-sensitive sensor" such that "glaring or blinding of oncoming traffic is effectively prevent." EX1010, 9:22-25.

Jiao Second Dec., EX1051, ¶124.

128. Using this illumination scheme, Karlsson's headlight system determines an illumination for a "first subsection" and a "second subsection," as shown above in Petitioner's annotated version of Figure 14. Pet., 95-102; EX1003,

Jiao Second Dec., EX1051, ¶128.

Pet., pp. 91-102; Jiao First Dec., EX1003, ¶¶478-495; POR, pp. 58-64; Turk Second Dec., ¶¶259-279; Pet. Reply, pp. 10-12; Jiao Second Dec., EX1051, ¶¶124-129.

Beam's Headlight System Determines Illumination ([26.4]-[26.6]/[65.3]-[65.6])

Beam-Thominet discloses claim elements [26.4]-[26.6] and Beam-Thominet-Stam discloses claim elements [65.3]-[65.6] for similar reasons as applied to claim elements [59.8]-[59.9] in the -197 proceeding.

7. [26.6]

Beam discloses [26.6]. *Supra* Sections V/V.A/V.B.5/V.B.6; EX1003, ¶157. Beam's controller/processor determines a control strategy (e.g., feedback) to "cause the *intensity* of the selected microbeams to be reduced…illumination beam having a *high level of illumination*…with only selected portions…being *reduced*" to output illumination in the first subsection (with the vehicle) and the second subsection (without the vehicle). EX1005, 7:30-36, FIGS. 1, 1C-1D, 7, Abstract, 1:5-18, 2:59-3:24, 4:10-25, 5:13-6:4, 6:11-19, 6:40-48, 8:23-38; EX1003, ¶158. Beam also discloses "controller module uses the *sensor spatial data (video)*…to *control the Illuminator*" and "*processor*…outputs *blanking signals*…*command[ing] the appropriate pixels to be reduced*." EX1005, 5:34-54, FIGS. 1, 1C-1D, 7, 8:35-38,

Petition, p. 27, *see also* p. 45.

cal system **106** to illuminate an area shown as **101**. The vehicles shown in various circles **104** and **105** correspond to the vehicles in circles **102** and **103** with the illumination in the shaded areas being reduced significantly to protect the vision of the oncoming drivers.

Beam, EX1005, 4:21-25.

While the next frame of data is being acquired, processor **1105** retrieves the location data and outputs blanking signals at the appropriate times, based on the contents of dot counter **1103** and line counter **1104**. The blanking signals are carried on blanking bus **1115** to spatial light modulator **203**. This commands the appropriate pixels to be reduced in intensity.

Beam, EX1005, 5:45-54.

Pet., pp. 23-31, 43; POR, pp. 40; Pet. Reply, pp. 6-7; Jiao Second Dec., EX1051, ¶¶63-65.

IPR2023-00328: Road Curvature Claims (Claims 32-36, 70)

IPR2023-00328			
Claim	**Language**	**Claim**	**Language**
32	wherein the determining illumination requirements further includes determining illumination for an upcoming curve … wherein the determining the control strategy further comprises … controlling the directional light clusters to create **an output headlight beam that illuminates around the curve**.	**33/35**	wherein the determining illumination requirements further includes determining illumination for an upcoming turn … wherein the determining the control strategy further comprises … controlling the directional light clusters to create **an output headlight beam that illuminates the turn**.
34/36	wherein the determining illumination further includes … **increases illumination of an upcoming turn** … wherein the determining the control instructions further comprises … controlling one or more of the directional light sources to **achieve illumination of the turn**.	**70**	wherein the determining illumination further includes … **increases illumination of an upcoming curve** … wherein the determining the control instructions further comprises … controlling one or more of the directional light sources to **achieve illumination around the curve**.

Pet., pp. 53-62, 125-134; POR, pp. 46-50, 68-69; Pet. Reply, pp. 19-24.

IPR2023-00328: Road Curvature Claims (Claims 32-36, 70)

Karlsson-Harbers-Gotou and Beam-Thominet-Kobayashi disclose the road curvature claims for the same reasons as applied in the -197 proceeding.

FIG.8

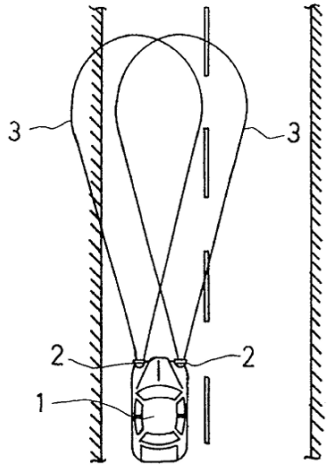

FIG.9

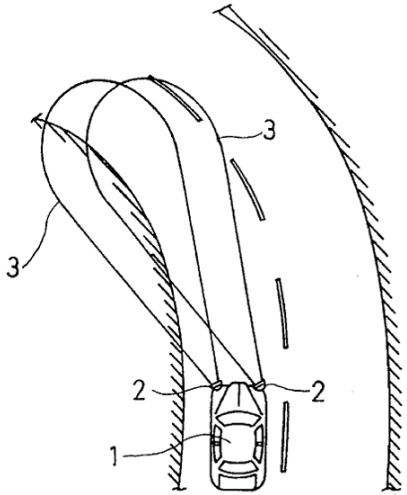

Gotou, EX1012, FIGs. 8, 9.

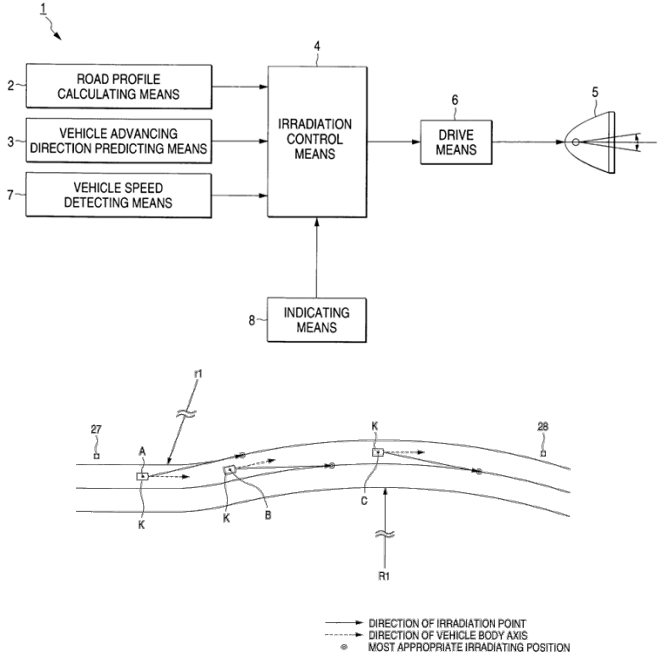

Kobayashi, EX1008, FIGs. 1, 10.

Pet., pp. 53-62; Jiao First Dec., EX1003, ¶¶310-351, 623-649; POR, pp. 46-50, 68-69; Turk Second Dec., EX2006, ¶¶206-211; Pet. Reply, pp. 19-24; Jiao Second Dec., EX1051, ¶¶100-109.

IPR2023-00328: Yellowish/Blueish Illumination (Claims 28/68)

IPR2023-00328			
Claim	Language	Claim	Language
28	wherein the illumination requirements accommodate peripheral night vision of the driver, by **defining bluish headlamp illumination** along a side of a road, while **defining yellow tinted illumination** along the road.	**68**	wherein the determining illumination further includes determining a **yellowish illumination color** for illumination illuminating a road within the field-of-view and a **blueish illumination color** for illumination illuminating areas off-road within the field-of-view.

Pet., pp. 67-73, 119-122, POR, pp. 52-53, 65; Pet. Reply, pp. 27-28.

IPR2023-00328: Yellowish/Blueish Illumination (Claims 28/68)

Patent Owner Contests the Motivation to Combine Harbers's Colored Beam Segments

Karlsson-Harbers

Ground 8D is the only sub-ground where the colored LEDs of Harbers, relied on in Petitioner's explanation of claims 28/68, exist in the combination. That combination, however, suffers from the issues noted with respect to using singularly colored LEDs to achieve a color shifting. (§VII.I.2, *supra*; Ex.2006, ¶285.)

Accordingly, the sub-ground 8D constitutes a ground that no POSA would have been motivated to create or use in the manner proposed. For at least these

Patent Owner's Argument
POR, p. 65.

Beam-Thominet-Harbers

LED. Thus, regardless of whether the color comes from Thominet or Harbers, this creates the unaddressed color-shifting issue noted above as a problem with Karlsson-Harbers, *mutatis mutandis*. (§VII.A.2.c, *supra*; Ex.2006, ¶232.) Beam, which selectively blanks illumination, will, similar to Karlsson, unpredictably blank sections of the LED array (now including color) and will therefore produce an unpredictably color-changing forward beam, as various different colored LEDs are blanked or illuminated. (expert.). Thus, the argument against adding colored

Patent Owner's Argument
POR, p. 53.

Pet., pp. 67-74, 119-122; Jiao First Dec., EX1003, ¶¶379-408, 584; POR, pp. 52-53, 65; Turk Second Dec., EX2006, ¶¶231, 284; Pet. Reply, pp. 27-28; Jiao Second Dec., EX1051, ¶¶110-113.

Harbers Discloses Yellowish/Blueish Illumination (Claims 28/68)

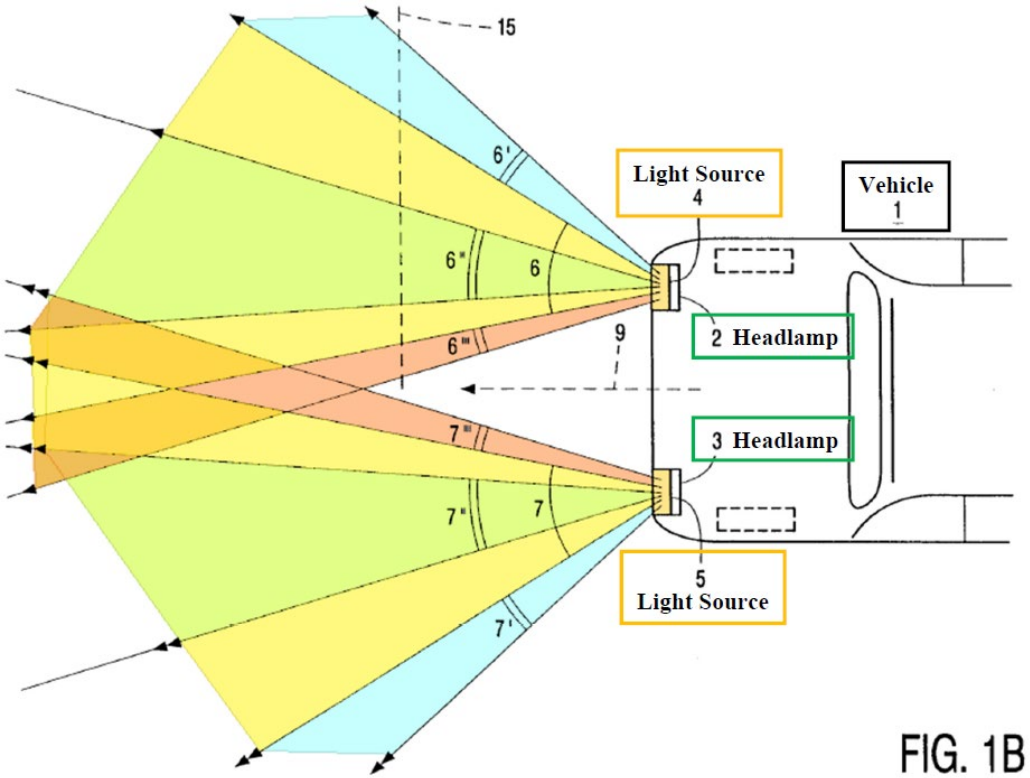

Harbers, EX1011, FIG. 1B (annotated).

Harbers discloses "*on-axis* part…is adapted to…*green-yellow light*…*off-axis* parts…is adapted to…*blue-green light*." EX1011, 6:3-7, FIGS. 1B-2; *id.*, 9:1-10:5, 9:28-10:5, 5:21-26; EX1003, ¶¶575-576. Thus, Harbers's independently controllable, colored directional light beam segments 6-6'-6"-6''', 7-7'-7"-7''' provide "peripheral night vision" with "blueish…illumination along a side of a road…[and] yellow tinted illumination along the road" (claim 28), and "yellowish illumination…illuminating a road…and a blueish illumination…illuminating areas off-road" (claim 68). EX1003, ¶576.

Petition, p. 120.

blue-green light. On the one hand, in the on-axis part of the light beam (the first beam segment) a spectral characteristic of the light is presented which is adapted to the photopic eye-sensitivity curve, i.e. rich in green-yellow light. On the other hand, in the off-axis parts of the light beam (the second beam segment) a spectral characteristic of the light is presented which is adapted to the scotopic eye-sensitivity curve, i.e. rich in blue-green light.

Harbers, EX1011, 6:3-7.

Pet., pp. 67-74, 119-122; Jiao First Dec., EX1003, ¶¶379-408, 584; POR, pp. 52-53, 65; Turk Second Dec., EX2006, ¶¶231, 284; Pet. Reply, pp. 27-28; Jiao Second Dec., EX1051, ¶¶110-113.

Harbers's Colored LEDs are Compatible with Karlsson

119. First, a POSA would have understood how to implement Harbers's colored-LEDs into Beam-Thominet's system to provide a dynamic light beam with desirable color output. EX1011, 4:10-14, 8:31-34, 10:6-10, 10:26-28. Specifically, a POSA would have understood how to arrange the different color-LEDs in Beam's modified headlamps to reduce "possible color effects … for an observer looking into the light emitted by the vehicle headlamp." EX1011, 8:30-33. A POSA would have also understood how to configure the optical system in Beam-Thominet-Harbers/Beam-Thominet-Stam-Harbers's system to "effectively mix the colors originating from the LEDs" to prevent any undesirable color-shifts. EX1011, 8:32-34; *see also* EX1006, ¶5 "[L]ight of different colors is emitted and the partial quantities of the semiconductor light sources are operatable for producing a predetermined color of the light beam exiting the illumination device.")

-328 Jiao Second Dec., EX1051, ¶119.

Dr. Turk's new, baseless assertion that Karlsson's system "creates a color-shifting problem" demonstrates his lack of understanding of the claimed headlight technology. EX2006, ¶206; EX1051, ¶¶58-60, 162.

Pet. Reply, p. 17.

120. Second, a POSA would have understood that forward illumination of Beam's/Thominet's/Harbers's headlights would be within a range of (well standardized and regulated) white color that would not result in the "color-shifting issue" purported by Dr. Turk. EX2006, ¶232; EX1069, 5-6. While Harbers teaches to provide different colored-LEDs, the headlight beams generated from each colored light source have "a more or less 'white' appearance." EX1011, 5:27-30. Thus, Dr. Turk's speculations of unpredictable color usage are wrong.

-328 Jiao Second Dec., EX1051, ¶120.

-197 POR, Paper 18, pp. 62-63, 74; -328 POR, Paper 20, pp. 34-37; -335 POR, Paper 19, pp. 81-82.; -197 Pet. Reply, Paper 22, pp. 17-18; -197 Jiao Second Dec., EX1051, ¶¶58-60, 162; -328 Pet. Reply, Paper 25, pp. 17-18, 30; -328 Jiao Second Dec., EX1051, ¶¶119-120, 146-148; -335 Pet. Reply, Paper 24, pp. 25-26; -335 Jiao Second Dec., EX1051, ¶¶151-153.

IPR2023-00328: Motivation to Combine Harbers with Beam-Thominet-Stam

379. As described in Section X.A, a POSA would have been motivated to combine Beam-Thominet. A POSA would have been further motivated to modify Beam-Thominet to adjust light based on multiple colored directional illumination for different functions, as in Harbers, to further control Beam-Thominet's adaptive headlamps to illuminate a roadway, thereby improving visibility and driver safety—an express purpose of Beam-Thominet. EX1005, 3:29-44 ("*manually*

Jiao First Dec., EX1003, ¶379.

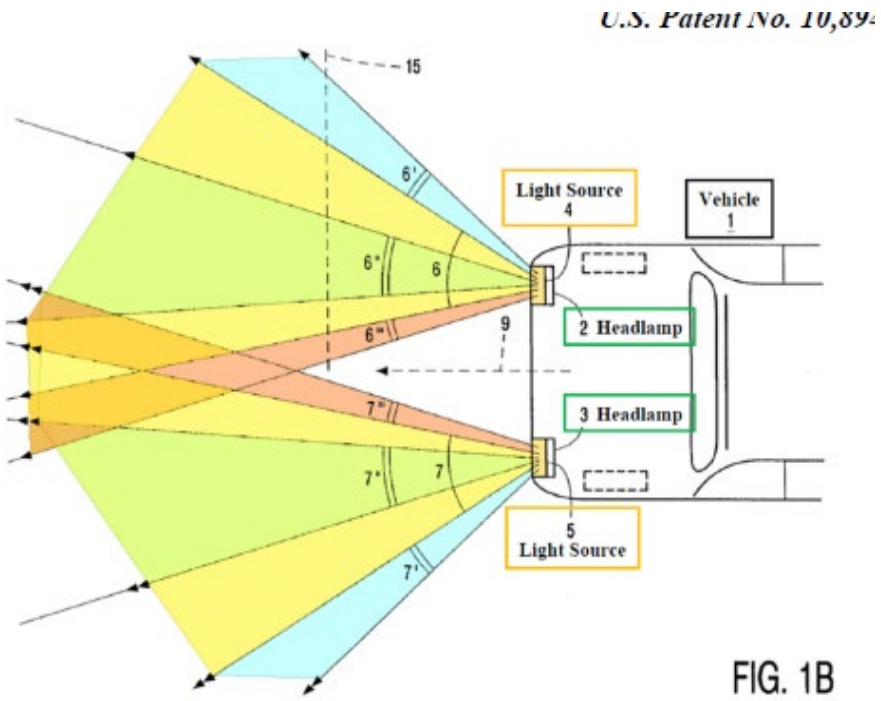

Harbers, EX1011, FIG. 1B (annotated).

Pet., pp. 67-73; Jiao First Dec., EX1003, ¶¶379-391; POR, pp. 53-54; Turk Second Dec., EX2006, ¶¶232-233; Pet. Reply, pp. 27-28; Jiao Second Dec., EX1051, ¶¶111-113.

Harbers's Colored LEDs are Compatible with Beam-Thominet and Beam-Thominet-Stam

384. A POSA would have had a reasonable expectation of success combining Beam-Thominet and Harbers, for example, by simply modifying software instructions in memory of Beam's controller/processor to organize Beam's array of microbeams into multiple colored directional beam segments for different functions. Overall, this is a simple software implementation. This would have been routine and well within a POSA's skill due to the similarities in Beam-Thominet's and Harbers's adaptive systems—their common components were well known and there would have been no limitations for a POSA to make such modification.

Jiao First Dec., EX1051, ¶384.

112. My First Declaration was clear how the teachings of Harbers's multi-colored beam segments would be implemented in Beam-Thominet. EX1003, ¶¶379-391, 427. In combining the teachings of Harbers's multi-colored beam segments with Beam's modified systems, a POSA would have understood to use colored light sources to generate the light beam. EX1003, ¶¶379-391, 427. A POSA would have sought to incorporate *known components* of Harbers's opto-electronic elements 11-14 on a "curved substrate" (with differently colored opto-electronic EX1011, 5:14-26, 6:1-7, 6:27-7:32, FIGS. 1B-2. A POSA would have understood to "incorporate known components," such as colored LEDs, and "simply modify[] software instructions in memory of Beam's controller" to direct "Beam's array of microbeams into multiple colored directional beam segments." EX1003, ¶¶384-385.

Jiao Second Dec., EX1051, ¶112.

Pet., pp. 67-74, 119-122; Jiao First Dec., EX1003, ¶¶379-408, 584; POR, pp. 52-53, 65; Turk Second Dec., EX2006, ¶¶231, 284; Pet. Reply, pp. 27-28; Jiao Second Dec., EX1051, ¶¶110-113.

IPR2023-00328: Yellowish Beam for Fog/Snow (Claims 29/69)

IPR2023-00328			
Claim	Language	Claim	Language
29	wherein the illumination requirements **accommodate sensed fog or snow** environmental conditions by defining a shift of at least a portion of the **headlight beam towards yellow**.	**69**	wherein the data includes **data indicating fog or snow** environmental conditions and the determining illumination includes determining a shift of at least a portion of the light output from the **headlight system towards yellow**.

Pet., pp. 75-77, 122-124, POR, pp. 54, 56, 66-67; Pet. Reply, pp. 28-29.

Harbers Discloses Yellowish Beam for Fog/Snow (Claims 29/69)

Patent Owner alleges that Harbers does not disclose sensed fog/snow

Karlsson-Harbers

Additionally, Petitioner never proves the presence of "**sensed** fog or snow," or any sensor capable of creating "[sensor] data including data indicating fog or snow." Merely noting that certain beams of Harbers are created for use in fog or snow is insufficient to prove that any processor is determining illumination requirements that accommodate sensed fog or snow (claim 29) or that any sensor data indicates fog or snow (claim 69). These separate limitations are not argued differently, another fatal failure by Petitioner in failing to note the different requirements of the claims. (Ex.2006, ¶290.)

Patent Owner's Argument
POR, p. 66.

Beam-Thominet-Harbers

processor as claimed. (Ex.1005, 3:34-36.) Petitioner further cites Harbers. (Petition, 76; Ex.1011, 10:6-14.) This teaching cited merely notes that "the spectral composition of the light beams generated by the light source can be adapted…;" there is no teaching of automatic adaptation and still no teaching of "**sensed** fog or snow" as claimed. (Ex.2006, ¶235.)

•••

Just as Petitioner failed to show that there was "*sensed fog or snow*" in claim 29, here Petitioner, in rejecting by analogy, also fails to even note or show the specific requirement that the "*data*" (sensor data of claim 65) "*includes data indicating fog or snow*." This element is simply missing from the analysis, because Petitioner never explained how this element was inconsequentially different from the elements of claim 29. This fatal defect renders the argument for claim 69

Patent Owner's Argument
POR, p. 54-56.

Pet., pp. 75-77, 122-124; Jiao First Dec., EX10003, ¶¶379-432, 588-602; POR, pp. 54, 56, 66-67; Turk Second Dec., EX2006, ¶¶235-236; Pet. Reply, pp. 28-29; Jiao Second Dec., EX1051, ¶¶114-117.

Harbers Discloses Yellowish Beam for Fog/Snow (Claims 29/69)

Harbers discloses "[u]nder unfavorable weather conditions, in particular *fog and snow…a relatively wide beam 16* is obtained which is substantially composed of *yellow light*." EX1011, 10:6-14, FIGS. 1B, 2, 4A, 9:23-25, 4:17-21; EX1003, ¶¶410-411.

Petition, p. 76.

410. Beam-Thominet does not disclose shifting a portion of the beam towards yellow, but this feature was well known in the prior art, e.g., as explicitly disclosed by Harbers. *See also* EX1009, 25:20-25 ("headlights 101 and 102 are

Jiao First Dec., EX1003, ¶410.

Under unfavorable weather conditions, in particular fog and snow, when visibility is reduced by backscattering caused by fog or snow particles, both the configuration and the spectral composition of the light beams generated by the light source 4; 5 can be adapted by activating different combinations of LEDs and by changing the output levels of the various LEDs. As a result of these adaptations, the spatial and/or spectral distribution of the light is changed. An example of such an adaptation is shown in Fig. 4A, wherein a relatively wide beam 16 is obtained which is substantially composed of yellow light. The absence of the blue component in the visible light causes the effect of backscattering to be substantially reduced.

Harbers, EX1011, 10:6-14.

In some embodiments of the present invention, headlights 101 and 102 are programmed to detect atmospheric effects that reduce roadway visibility and adjust roadway illumination provided by the headlight accordingly. For example, in accordance with an embodiment of the present invention, headlights 101 and 102 are programmed to detect fog and adjust light provided by their respective illuminators 116 to provide light appropriate for driving in fog. Fog is detected, in accordance with an embodiment of the present invention, by measuring back-scatter from light provided by headlights 101 and/or 102. Controller 118

Braun, EX1009, 25:20-25.

Pet., pp. 75-77, 122-124; Jiao First Dec., EX10003, ¶¶379-432, 588-602; POR, pp. 54, 56, 66-67; Turk Second Dec., EX2006, ¶¶235-236; Pet. Reply, pp. 28-29; Jiao Second Dec., EX1051, ¶¶114-117.

IPR2023-00328: Third Subsection/Spotlighting (Claims 66/67)

IPR2023-00328			
Claim	Language	Claim	Language
66	wherein the data includes **data indicating a pedestrian** and wherein the determining illumination includes **determining an illumination level, for at least a third subsection** including the pedestrian.	**67**	wherein the data includes **data indicating a road-sign** wherein the determining illumination includes **determining an illumination level, for at least a third subsection** including the road-sign.

Pet., pp. 62-66, 134-140; POR, pp. 50-51; Pet. Reply, pp. 24-26.

Braun Discloses Pattern Recognition for Spotlighting (Claims 66/67)

In accordance with an embodiment of the present invention, 3D range-cameras 112 (Fig. 5) image the roadway scene and determine distances to objects and features in the scene. The pattern recognition application processes the images of the roadway scene and identifies roadway signs 121 and 122. Controller 118 optionally controls luxels in illuminators 116 of headlights 101 and 102 to provide light beams 103 and 104 that spotlight roadway signs 121 and 122 respectively. Since road sign 102 is further from vehicle 100 than is road sign 101, controller 118 controls luxels in headlight 102 that illuminate roadway sign 122 to provide light at intensity greater than light provided by luxels in headlight 101 that illuminate roadway sign 121. In some embodiments of the present invention, intensity of light provided by luxels that illuminate each roadway sign 121 and 122 is proportional to D^2 where D is the distance of the roadway sign from vehicle 100.

Braun, EX1009, 24:3-12.

Other functions and variations of functions of headlights 101 and 102 and variations thereof, in accordance with embodiments of the present invention will occur to persons of the art. For example, headlights 101 and 102 might "pattern recognize" presence of people in a road in front of vehicle 100 and spotlight the people to alert the driver to their presence.

Braun, EX1009, 26:31-35.

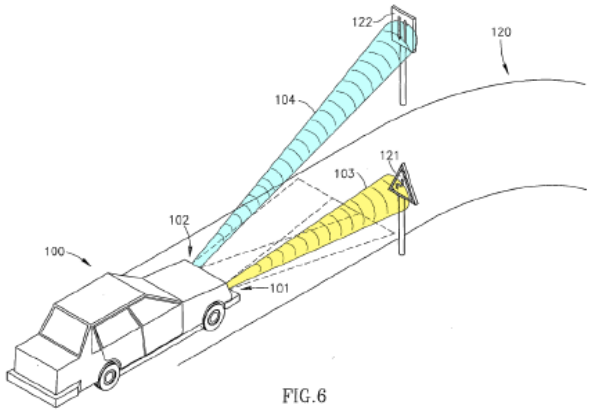

FIG.6

Braun, EX1009, FIG. 6 (annotated).

Pet., pp. 62-66, 134-140; Jiao First Dec., EX1003, ¶¶355-378, 650-676; POR, pp. 50-51, 73-77; Turk Second Dec., EX2006, ¶¶223-227, 317-324; Pet. Reply, pp. 24-26; Jiao Second Dec., EX1051, ¶¶177-190.

Motivation to Combine Braun for Spotlighting (Claims 66/67)

Karlsson-Harbers

Including an additional control technique (software implementation) for Karlsson-Harbers's controller—Braun's *known technique* of pattern recognition—would have enhanced Karlsson-Harbers by identifying and illuminating objects of interest in a scene, increasing visibility and safety. EX1009, 5:27-31, 14:21-30,

Petition, p. 134.

to combine Karlsson-Harbers. A POSA would have been further motivated to modify Karlsson-Harbers to adjust light based on pattern recognition (e.g., identifying pedestrians, road signs, obstacles, etc.), as in Braun (EX1009, 5:27-31, 14:21-30, 22:19-23, 23:28-24:27, 26:29-27:2, FIGS. 1, 5-6), to further control Karlsson's directional spotlight beams to illuminate objects, thereby improving visibility and driver safety—an express purpose of Karlsson. EX1010, 1:16-26,

Jiao First Dec., EX1003, ¶650.

Beam-Thominet-Stam

The additional control of having pattern recognition as in Braun, implemented with Beam's controller 108/illuminator 109 (including SLM 203), would have enhanced Beam-Thominet-Stam's system by identifying and illuminating objects of interest, capturing the driver's attention and/or alerting the driver to the danger of the objects. EX1003, ¶360. This would have merely been applying Braun's known

Petition, pp. 62-63.

motivated to combine Beam-Thominet-Stam. A POSA would have been further motivated to modify Beam-Thominet-Stam to adjust light based on pattern recognition (e.g., identifying pedestrians, road-signs, obstacles, etc.), as in Braun (EX1009, 5:27-31, 14:21-30, 22:19-23, 23:28-24:27, 26:29-27:2, FIGS. 1, 5-6), to further control Beam's directional microbeams to illuminate objects, thereby improving visibility and driver safety—an express purpose of Beam. EX1005, 3:8-14, 3:37-44, 5:33-54, 7:1-13.

Jiao First Dec., EX1003, ¶370.

Pet., pp. 62-67, 134-140; Jiao First Dec., EX1003, ¶¶355-378, 650-676; POR, pp. 50-51, 73-77; Turk Second Dec., EX2006, ¶¶223-227, 317-324; Pet. Reply, pp. 24-26; Jiao Second Dec., EX1051, ¶¶177-190.

Motivation to Combine Braun for Spotlighting (Claims 66/67)

Karlsson-Harbers

Once again, Petitioner fails to note, let alone address, which control function, Karlsson, Harbers or Braun, would be given primacy, as with Beam-Thominet-Braun or how the three control functions would otherwise interact in scenarios where at least two control functions demanded contradictory results. (§VII.A.2.a, *supra*.) Nor does Petitioner, in this case, describe which functions are controlling which of the two (LED array 2, modulator 3) controllable light-related systems of the proposed combination. (§VII.A.3, *supra*; Ex.2006, ¶321.)

Patent Owner's Argument
POR, p. 75.

189. Karlsson's grid of individually controlled spotlight sources allows the headlight system to perform two or more control functions simultaneously. Because Karlsson's emitted beam consists of a high number of spotlight beams (EX1010, 13:30-14:5), Karlsson's grid of spotlight sources are configured to direct spotlight beams at a detected object, such as a pedestrian or sign, while dimming spotlight beams directed a detected vehicle, as explained in my First Declaration. EX1003, ¶¶650-656. Karlsson specifically states that its lighting means can "be composed of a plurality of light sources and/or light modulators." EX1010, 21:13-15; *see* EX1003, ¶¶107-109. A POSA would have understood that the use of "and/or" means that Karlsson is explicitly teaching that both a plurality of light sources (e.g., the LEDs Karlsson discloses) *and* a light modulator can be included in the same embodiment. Thus, Karlsson's headlight system can control the directionality of each individual light source to perform the spotlight techniques described in Braun.

Jiao Second Dec., EX1051, ¶189.

Pet., pp. 62-66, 134-140; Jiao First Dec., EX1003, ¶¶355-378, 650-676; POR, pp. 50-51, 73-77; Turk Second Dec., EX2006, ¶¶223-227, 317-324; Pet. Reply, pp. 24-26; Jiao Second Dec., EX1051, ¶¶177-190.

Motivation to Combine Braun for Spotlighting (Claims 66/67)

Beam-Thominet-Stam

First, for the reasons presented with respect to claim 34, there is no un-used illumination of the Beam-Thominet-Stam combination to use to "spotlight" anything – rendering the addition of Braun for this function also superfluous. (§VII.D.3, *supra*; Ex.2006, ¶223.) Braun's teachings are cited for "spotlighting", an impossibility for a system already maximally using its emitters. (Petition, 66; Ex.2006, ¶223.)

For at least this reason, there is no motivation to add Braun to Beam-Thominet-Stam and Petitioner thus fails to prove unpatentability of claims 66-67.

Patent Owner's Argument
POR, pp. 50-51.

181. First, a POSA would have understood that Beam controls intensity and angular position of its directional and aimable microbeams, in a given desired direction, to form a maximum desired distribution, namely a beam pattern, not merely "full blast" everywhere at all times. *See supra* §VI.D.1. Beam's system "control[s] the intensity, and/or the angular position, of one or more" LEDs. EX1005, Abstract. Beam controls intensity including angular position to a maximum desired *in a given direction*. So, what Beam discloses to a POSA is that Beam determines a light change, and adapts the headlamps' light beam pattern in both intensity *and* spatial (angular) distribution as in the '503 patent's claims. Thus, Beam's headlight system controls *directional* microbeams to illuminate objects to execute the techniques taught in Braun. EX1003, ¶370.

Jiao Second Dec., EX1051, ¶181.

Pet., pp. 62-66, 134-140; Jiao First Dec., EX1003, ¶¶355-378, 650-676; POR, pp. 50-51, 73-77; Turk Second Dec., EX2006, ¶¶223-227, 317-324; Pet. Reply, pp. 24-26; Jiao Second Dec., EX1051, ¶¶177-190.

Volkswagen Group of America, Inc. & Porsche Cars North America, Inc.
v.
Yechezkal Evan Spero

IPR2023-00335, IPR2023-01321
U.S. Patent No. 10,894,503

VOLKSWAGEN

GROUP OF AMERICA

Petitioner's Demonstratives

IPR2023-00335: Agenda (Independent Claims 1/37)

1. A POSA would have been motivated to combine: 1) Harbers's curved substrate with Karlsson; and 2) Thominet's curved substrate with Beam.
2. Karlsson-Harbers discloses a headlight system that determines subsections, including at least one second subsection, in response to sensor data [1.4]/[37.6].
3. Karlsson-Harbers and Beam-Thominet-Stam disclose a headlight system that determines an illumination for a first subsection resulting in light below a predefined threshold [1.8]-[1.10]/[37.7]-[37.8].
4. Karlsson-Harbers discloses a headlight system that Illuminates at least one or more second subsections above a predefined threshold value **to either side of the first subsection [37.9].**
5. The Karlsson-Harbers and Beam-Thominet grounds render obvious all dependent claims:
   - Reflectors/light modifying element claims,
   - Road curvature claims,
   - **Colored beam segments claims,**
   - **Vehicle identification/position claims,**
   - **Camera sensor claims, and**
   - **IR/UV wavelength output claims.**

POR, pp. 33-87.

IPR2023-00335: ’503 Patent – Independent Claim 1

Issued Claim 1	Limitation	Issued Claim 1	Limitation
1.P	A vehicle headlight system comprising	1.6	one or more sensors configured to obtain and provide the sensor data predefined as pertinent to illumination requirements for the field-of-view; and
1.1	one or more headlamps and a vehicle structure, arranged for affixing components of the system to the vehicle;	1.7	a logical controller including a processor, the processor in communication with a memory storing one or more algorithms, with the sensors, and with the control circuitry,
1.2	a plurality of light clusters, arranged in each of the one or more of the one or more headlamps,	**1.8**	wherein the processor is configured to process the one or more algorithms and the sensor data to determine an illumination for at least two of the sub-sections,
1.3	the headlamps capable of projecting light so as to illuminate a plurality of sub-sections of a field-of-view with different illumination characteristics,	**1.9**	that reduces illumination to reduce glare in at least a first of the at least two subsections and
1.4	the subsections determined in response to sensor data, wherein the light clusters operate to create a headlight beam;	**1.10**	adapt the light emitted from one or more of the light-clusters so as to create the headlight beam that provides the determined illumination.
1.5	electronic control circuitry configured to independently operate the light clusters;		

Pet., pp. 15-32, 100-120.

IPR2023-00335: ’503 Patent – Independent Claim 37

Issued Claim 37	Limitation	Issued Claim 37	Limitation
37.P	A vehicle headlight system comprising	37.6	at least a portion of the sensor data indicating a second vehicle within the field-of-view; and
37.1	one or more headlamps affixable to a first vehicle;	37.7	at least one processor configured to: receive the sensor data; process the sensor data to determine a light distribution pattern for an adaptive headlight beam,
37.2	a plurality of light clusters arranged in each of the one or more of the headlamps and	37.8	such that a headlight beam adapted to the pattern substantially illuminates a first subsection of the field-of-view including at least a portion of the second vehicle with an illuminance below a predefined threshold value,
37.3	capable of illuminating sub-sections of a field-of-view with different illumination characteristics,	37.9	while the beam substantially illuminates at least the one or more second subsections of the field-of-view to either side of the first subsection with an illuminance above the predefined threshold value; and
37.4	wherein at least two of the light clusters operate to create a headlight beam;	37.10	instruct operation of at least two of the light clusters to create the adapted headlight beam.
37.5	one or more sensors configured to obtain and provide sensor data,		

Pet., pp. 58-63, 100-120.

IPR2023-00335: Motivation to Combine: Karlsson-Harbers and Beam-Thominet

Karlsson-Harbers and Beam-Thominet are combined for the same reasons as applied in the -197 proceeding.

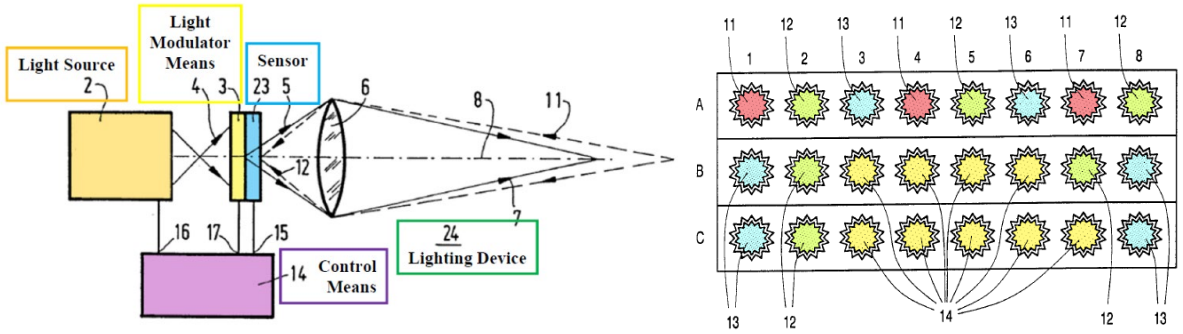

Karlsson, EX1010, FIG. 3, (annotated).
Harbers, EX1011, FIG. 2 (annotated).

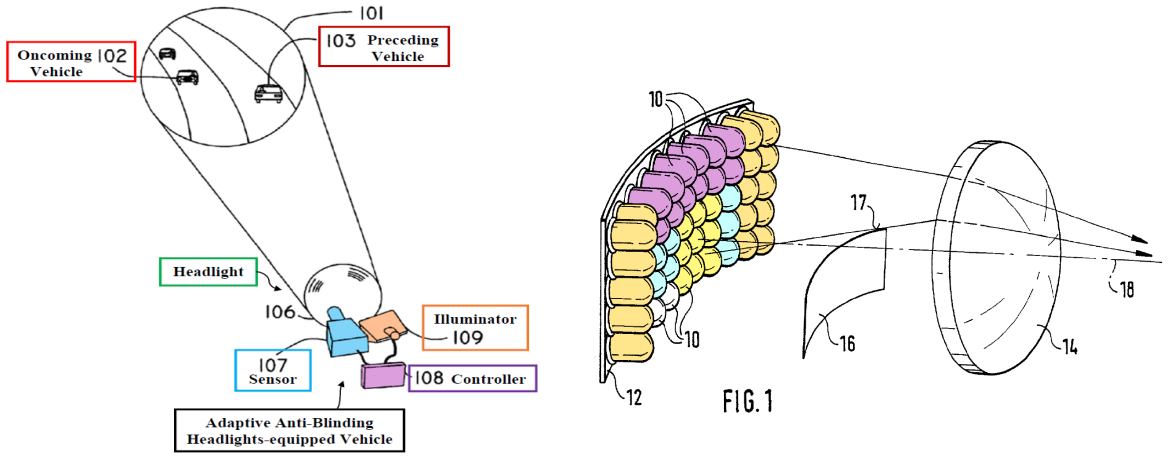

Beam, EX1005, FIG. 1 (annotated).
Thominet, EX1006, FIG. 1 (annotated).

Pet., pp. 10-15, 96-100; Jiao First Dec., EX1003, ¶¶121-139, 549-564; Pet. Reply, pp. 8-12, 22-26; Jiao Second Dec., EX1051, ¶¶70-93, 139-149.

IPR2023-00335: Plurality of Light Clusters ([1.2]/[37.2])

IPR2023-00197		IPR2023-00328		IPR2023-00335	
[20.2]: "each headlamp including at least **three directional light sources aimed at different angles** relative to the vehicle"	**[59.2]:** "each headlamp including at least three directional **light sources having different aimings** relative to the first vehicle"	**[26.6]**: "determining a control strategy for controlling **one or more directional light clusters** in a headlight assembly to create an output headlight beam …"	**[65.9]**: "determining control instructions for controlling **one or more directional light sources** included in the adaptive headlight system …"	**[1.2]**: "**a plurality of light clusters**, arranged in each of the one or more of the one or more headlamps,"	**[37.2]: "a plurality** of **light clusters** arranged in each of the one or more of the headlamps"

Pet., pp. 16-18, 58 102-106.

IPR2023-00335: Plurality of Light Clusters ([1.2]/[37.2])

Karlsson-Harbers and Beam-Thominet disclose a plurality of light clusters

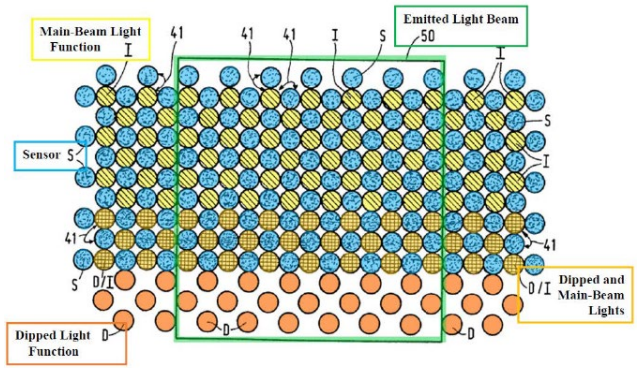

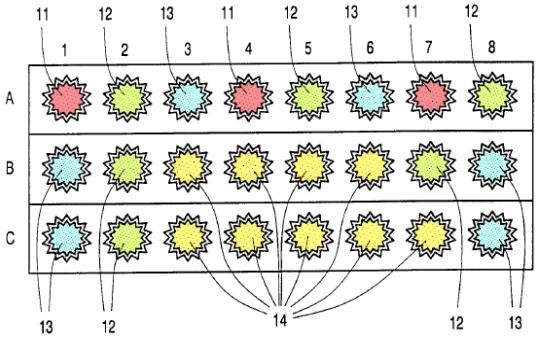

Karlsson, EX1010, FIG. 14 (annotated).
Harbers, EX1011, FIG. 2 (annotated).

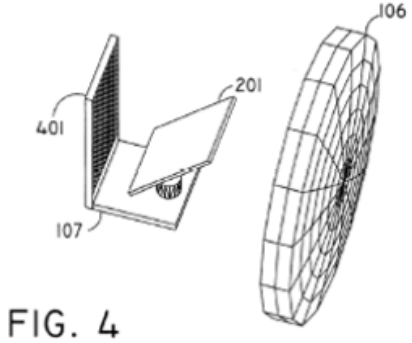

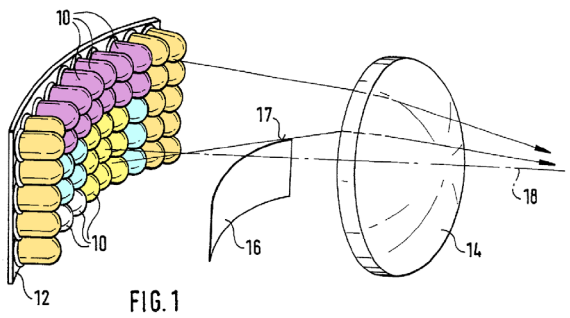

Beam, EX1005, FIG. 4.
Thominet, EX1006, FIG. 1 (annotated).

Pet., pp. 15-18, 58, 101-106.

IPR2023-00335: Sensor Data Used to Determine Subsections ([1.4]/[37.6])

IPR2023-00197		IPR2023-00328		IPR2023-00335	
[20.9]-[20.10]: "the processor …configured to: **process the sensor data to determine**, within a field-of-view, at least **a first subsection** including a detected vehicle and at least **a second subsection** not including the detected vehicle"	**[59.7]:** "processor is configured to: **process the sensor data to identify a first subsection**, of a field of view, that includes at least a portion of the second vehicle"	**[26.4]-[26.6]**: "determining illumination for at least **a first subsection** of the field-of-view including the other vehicle … and for at least **a second subsection** .. not including the other vehicle"	**[65.3]-[65.4]**: "determining illumination for at least **a first subsection** including the second vehicle and at least **one or more second subsections**"	**[1.4]:** "the **subsections determined in response to sensor data**, wherein the light clusters operate to create a headlight beam;"	**[37.6]:** "at least a portion of the **sensor data indicating a second vehicle** within the field-of-view,"

Pet., pp. 20-22, 59, 108-110; POR, pp. 66-68.

IPR2023-00335: Sensor Data Used to Determine Subsections ([1.4]/[37.6])

Karlsson-Harbers discloses using sensors to determine subsections [1.4]/[37.6] for the same reasons as applied in the -197 and -328 proceedings.

In the case of sensor means used for detecting ambient light and light from oncoming traffic as a parameter to which the pattern of the emitted light beam is to be adjusted, a preferred embodiment of the invention comprises spotlight sensors in the form of, for example, photosensitive diodes, photo transistors or other light-sensitive semiconductor components, which are spatially distributed in a predetermined manner or at random so as to be capable of detecting light from desired directions or from all directions.

Karlsson, EX1010, 5:16-23.

to be emitted. In the preferred embodiment of the invention, the light-sensitive sensors 9 and 23 are preferably designed to be capable of precisely determining the direction and the intensity of the detected light 11. They may for example be comprised of a matrix of photo diodes or in the case of a light-sensitive sensor 23, a photo-sensitive plate as used in modern video cameras.

Karlsson, EX1010, 12:19-24.

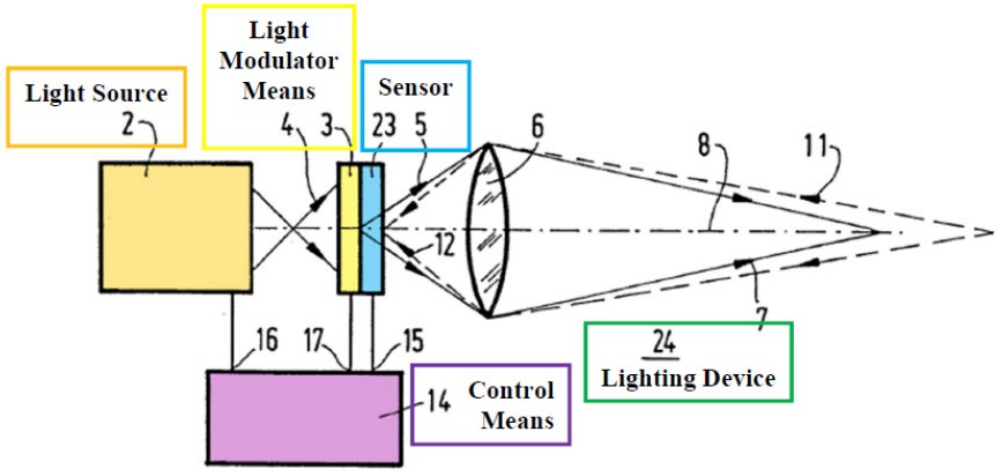

Karlsson, EX1010, FIG. 3 (annotated).

Pet., pp. 108-110; POR, pp. 66-68; Pet. Reply, pp. 20-21; Jiao Second Dec., EX1051, ¶¶130-31.

IPR2023-00335: Determining Light Output/Illumination ([1.8]-[1.10]/[37.7]-[37.8])

IPR2023-00197	IPR2023-00328		IPR2023-00328	
[59.8]-[59.9]: "**determine light output** for the headlight system that aims illumination at the first subsection … resulting in **light below a first predefined illuminance in the first subsection**"	**[26.4]-[26.6]**: "**determining illumination** for at least **a first subsection** of the field-of-view including the other vehicle … **create an output headlight beam meeting the determined illumination requirements**"	**[65.3]-[65.6]**: "… **determining an illumination level** for the first subsection that substantially **illuminates the first subsection below a predefined illuminance**"	**[1.8]-[1.10]**: "processor is configured to … **determine an illumination for at least two of the sub-sections** … adapt the light emitted from one or more of the light-clusters … that **provides the determined illumination**"	**[37.7]-[37.8]:** "processor configured to: … **determine a light distribution pattern** … such that a headlight beam adapted to the pattern **substantially illuminates a first subsection** of the field-of-view … with **an illuminance below a predefined threshold value**"

Pet., pp. 28-34, 115-122; POR, pp. 33-35, 64-66.; Pet. Reply, pp. 6-7, 18-20.

IPR2023-00335: Determining Light Output/Illumination ([1.8]-[1.10]/[37.7]-[37.8])

Karlsson-Harbers and Beam-Thominet disclose claim elements [1.8]-[1.10]/[37.7]-[37.8] for the same reasons as applied in the -197 and -328 proceedings.

9. [1.8]/[37.7]

Karlsson's "*incident light 11* on the *light-sensitive sensor 9*…is *processed* into an *electric control signal* on input 15 of the *control means 14*." EX1010, 9:9-17, FIGS. 3, 14-15, 5:16-23, 2:7-9, 3:27-31, 5:28-32, 9:18-26, 20:12-32, 21:36-22:4, 14:26-30; EX1003, ¶¶627-630. Thus, Karlsson's processor processes the data, and uses memory (with algorithms) to "determine an illumination for at least two of the subsections" (shaded area of no intensity/non-shaded area of high intensity). EX1010, 9:9-17, 12:19-24, FIGS. 14-15; EX1003, ¶¶631-632.

Petition, pp. 115-116 (Karlsson-Harbers).

9. [1.8]

Beam's "*[p]rocessor 1105* uses appropriate *algorithms*…to *determine the locations to be blanked*…and outputs *blanking signals*…*command[ing]* the appropriate pixels to be *reduced*." EX1005, 5:34-36, 5:46-54, FIGS. 1, 1C-1D, 7; Abstract, 6:14-19, 5:65-6:2; EX1003, ¶¶191-192. Beam's processor is also used in "*determining*…*the shape, size and location of an area to be darkened*." EX1005, 8:23-38, FIGS. 1, 1C-1D, 7; 1:5-18, 2:59-3:3, 4:10-25, 5:13-15, 5:33-54; EX1003, ¶193.

Thus, Beam's processor processes "algorithms" and sensor data to "determine an illumination for at least two of the subsections" (shaded area of reduced intensity/non-shaded area of high intensity). EX1005, 5:33-6:27, FIGS. 1C-1D; EX1003, ¶¶194-195.

Petition, p. 28 (Beam-Thominet).

Pet., pp. 28-34, 115-122; POR, pp. 33-35, 64-66.; Pet. Reply, pp. 6-7, 18-20; Jiao Second Dec., EX1051, ¶¶62-65, 122-129.

IPR2023-00335: At Least One Second Subsection to Either Side of the First Subsection Above the Threshold [37.9]

IPR2023-00335
[37.9]: "while **the beam substantially illuminates at least the one or more second subsections** of the field-of-view **to either side of the first subsection** with an illuminance **above the predefined threshold value**"

Pet., pp. 125-128; POR, pp. 67-68.; Pet. Reply, pp. 21-22.

Karlsson's Headlight System Illuminates at Least One Second Subsection Above Threshold [37.9]

2. [37.9]

See supra Sections XI/XI.A; EX1003, ¶¶537-563, 652-653. The second subsections (emitted light beam 50) are illuminated "above the predefined threshold" because the illuminance in those areas is "*higher* than that of conventional *dipped* headlights"—*above* a dipped beam threshold. *Supra* Section XI; EX1003, ¶653; EX1010, Abstract, FIG. 14.

•••

Thus, Karlsson's system would illuminate the second subsection (non-shaded area) "above the predefined threshold." *Supra* Section XI.A; EX1003, ¶¶653-657.

Petition, pp. 125-128.

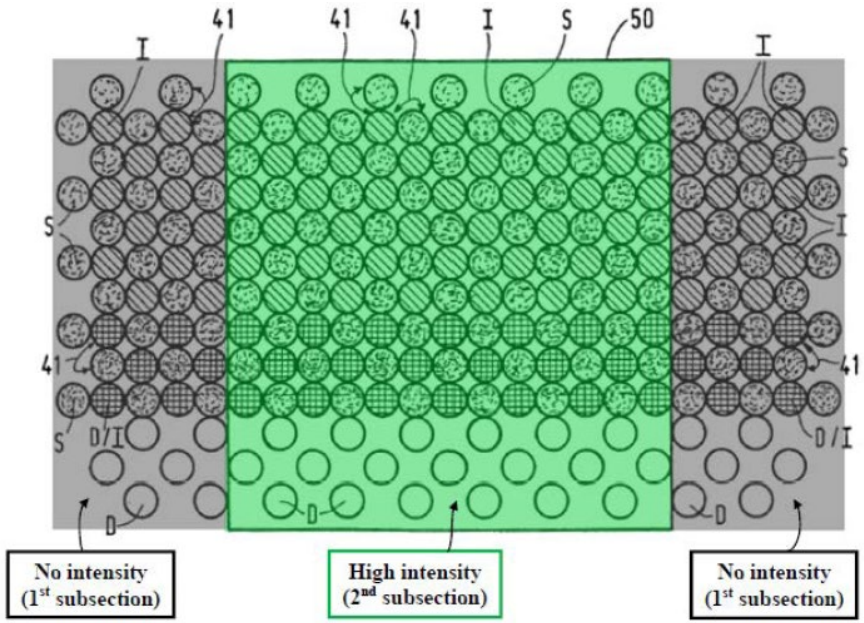

Karlsson, EX1010, FIG. 14 (annotated).

Pet., pp. 125-128; POR, pp. 67-68.; Pet. Reply, pp. 21-22; Jiao Second Dec., EX1051, ¶¶132-133.

Karlsson's Headlight System Illuminates at Least One Second Subsection Above Threshold [37.9]

Also, claim 37 requires "the beam substantially illuminates at least the one or more second subsections of the field-of-view **to either side of the first subsection** with an illuminance above the predefined threshold value." Petitioner's proffered proof, annotated Fig. 14, does not show this. (Petition, 127.) Petitioner continually states "the second subsections" (plural) but also explains those "sections" as the emitted light beam 50. (*Id.*, 125.) That beam 50 does not encompass plural sections or sections to either side of the first subsections as claimed. No explanation is given as to how this would be true, and Petitioner does

Patent Owner's Argument
POR, pp. 67-68.

at least one processor configured to:
receive the sensor data;
process the sensor data to determine a light distribution pattern for an adaptive headlight beam, such that a headlight beam adapted to the pattern substantially illuminates a first subsection of the field-of-view including at least a portion of the second vehicle with an illuminance below a predefined threshold value, while the beam substantially illuminates at least the one or more second subsections of the field-of-view to either side of the first subsection with an illuminance above the predefined threshold value; and

'503 Patent, Claim 37, EX1001, 100:15-26.

threshold value." EX1001, 100:23-28. Claim 37 does *not* require illuminating *at least two* "second subsections" located on separate sides of the "first subsection." EX1051, ¶132.

Pet. Reply, p. 21.

Pet., pp. 125-128; POR, pp. 67-68.; Pet. Reply, pp. 21-22; Jiao Second Dec., EX1051, ¶¶132-133.

Karlsson's Headlight System Illuminates at Least One Second Subsection Above Threshold [37.9]

subsection. POR, 68. My annotated version of Figure 14, however, shows emitted beam 50 (green—a second subsection) located to a side of dimmed spotlights (gray—a first subsection). EX1003, ¶¶653-657. Thus, my annotated version of Figure 14 confirms that Karlsson clearly meets the plain language of claim 37. Furthermore, my annotated version of Karlsson's Figure 14 shows one example of how the emitted light beam 50 can be adaptively shaped. A POSA would have understood that beam 50 can also include some dimmed subsections for glare prevention (e.g., on either side of the non-dimmed subsection) based on Karlsson's individually and group controllable LEDs. EX1010, 13:24-14:4.

Jiao Second Dec., EX1051, ¶133.

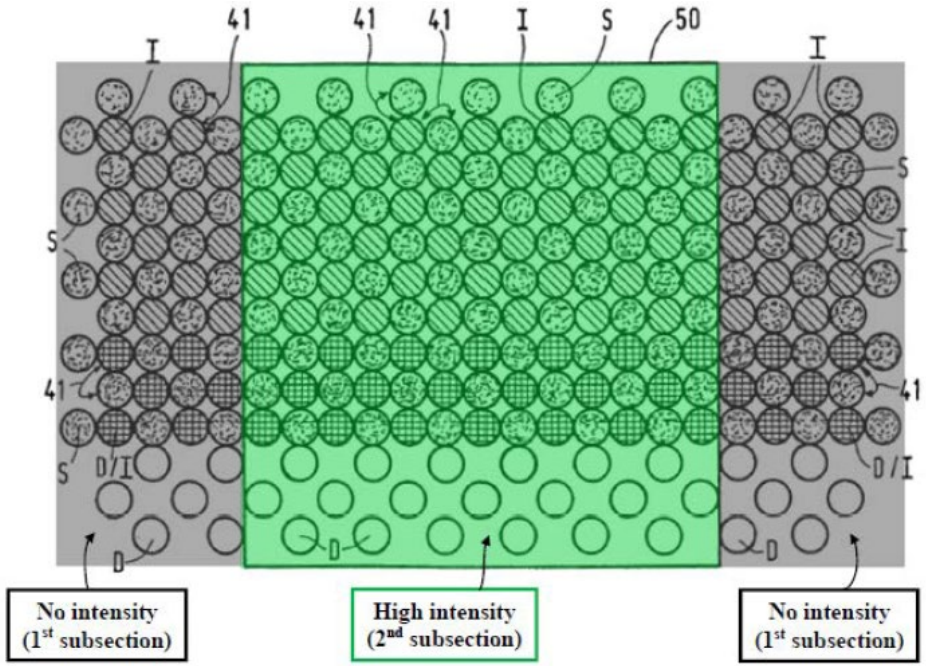

Karlsson, EX1010, FIG. 14 (annotated).

POR, pp. 68.; Pet. Reply, pp. 21-22; Jiao Second Dec., EX1051, ¶¶132-133.

IPR2023-00335: Reflectors/Light Modifying Elements (Claims 2-4, 19, 42-44, 58)

IPR2023-00335			
Claim	**Language**	**Claim**	**Language**
2	"one or more **light modifying elements** provided in the path of light emitted from at least one of the sources, further controlling the light-source characteristics"	**42**	"one or more **light modifying elements** provided in a path of light emitted from at least one of the light sources, further controlling at least one light characteristic of the at least one of the light source"
3	"said **light modifying element** comprising at least one of reflectors or refractors, and wherein variable light modifier control circuitry is configured to control the light-cluster light characteristic **by altering the light modifying elements"**	**43**	"wherein the one or more **light modifying elements** comprises at least one of reflectors or refractors, and wherein at least one of the at least one processors is configured to instruct **control of at least one light modifying element** resulting in a change to the light-source light characteristic"
4	"wherein the **light modifying element** further comprises at least one of **lenses**, diffractors, **optical devices**, … or optical switches"	**44**	"wherein the **light modifying element** further comprises at least one of **lenses**, diffractors, **optical devices**, … or optical switches."
19	"wherein at least one of the one or more headlamps further includes at least one of **reflectors**, refractors, or lenses usable to alter emitted light from at least one of the light clusters."	**58**	"wherein at least one of the one or more headlamps further includes at least one of **reflectors**, refractors, or lenses usable to alter emitted light from at least one of the light clusters as part of the instructed operation."

Pet., pp. 34-43, 53, 74, 128-135, 148; POR, pp. 35-36, 54-55, 69; Pet. Reply, pp. 12-13, 26.

IPR2023-00335: Reflectors/Light Modifying Elements (Claims 2-4, 19, 42-44, 58)

Karlsson-Harbers and Beam-Thominet disclose the light modifying elements/reflectors/lens for the same reasons as applied in the -197 proceeding.

F. Claims 4/44[13]

Karlsson's "*light modulator means*…[includes] '*Micro Mirrors*'." EX1010, 4:25-5:15, FIGS. 3, 6, 11:25-28, 14:1-15, 19:29-33; EX1003, ¶¶684-686. Thus, Karlsson's light modulator 3 includes "optical devices." EX1010, 5:7-15; EX1003, ¶¶685-686. Karlsson's lenses 6, 10 include "lenses." EX1010, 8:15-18, 8:31-35, 10:18-25, 11:2-15, FIGS. 1, 3; EX1003, ¶¶687-688.

Petition, p. 135.

E. Claim 4

Beam's "*spatial light modulator*…[includes] *digital mirror devices*… *light valves*." EX1005, 8:4-34, FIGS. 2, 4-6, 4:26-52, Abstract, 5:61-65, 7:25-29, 3:62-64, 5:3-16. EX1003, ¶219. Thus, Beam's SLM 203 includes "optical devices." EX1005, 8:4-18, EX1003, ¶¶219-220. Beam's optical system 106 (bi-convex lens) and/or Beam-Thominet's lens 43, 46 includes "lenses" or "optical devices." EX1005, 1:61-65, 4:10-59, 5:3-21, FIGS. 2-6; EX1006, ¶¶19, 29-31, FIGS. 1, 5-7; EX1003, ¶¶221-222.

Petition, p. 42.

Pet., pp. 34-43, 53, 74, 128-135, 148; POR, pp. 35-36, 54-55, 69; Pet. Reply, pp. 12-13, 26; Jiao Second Dec., EX1051, ¶¶94-95, 154-156.

IPR2023-00335: Road Curvature Claims (Claims 15-17, 54-56)

IPR2023-00335			
Claim	Language	Claim	Language
15	wherein the logical controller is further configured to determine at least a road curvature … and wherein the required illumination includes **increasing illumination in a direction of the road curvature**.	**54**	wherein … the at least one processors is further configured to determine at least a road curvature … and to determine a second illumination pattern defining **increased illumination in a direction of the road curvature**.
16/17	wherein the logical controller is further configured to determine at least a planned upcoming turn … and wherein the required illumination includes **increasing illumination illuminating the turn**.	**55/56**	wherein … the at least one processors is further configured to determine at least a planned upcoming turn … and to determine a third illumination pattern defining **increased illumination illuminating the turn**.

Pet., pp. 74-87, 159-167; POR, pp. 57-60, 83; Pet. Reply, pp. 16-17, 29-30.

IPR2023-00335: Road Curvature Claims (Claims 15-17, 54-56)

Karlsson-Harbers-Gotou and Beam-Thominet-Kobayashi disclose the road curvature claims for the same reasons as applied in the -197 and -328 proceedings.

FIG.8

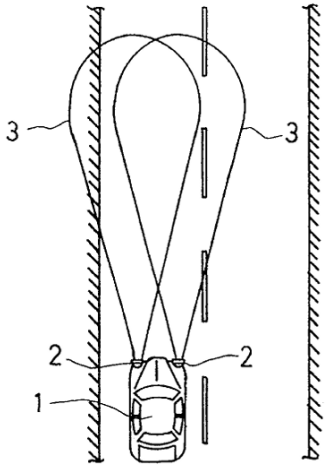

FIG.9

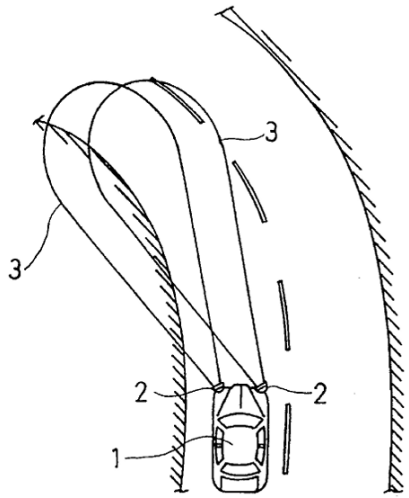

Gotou, EX1012, FIGs. 8, 9.

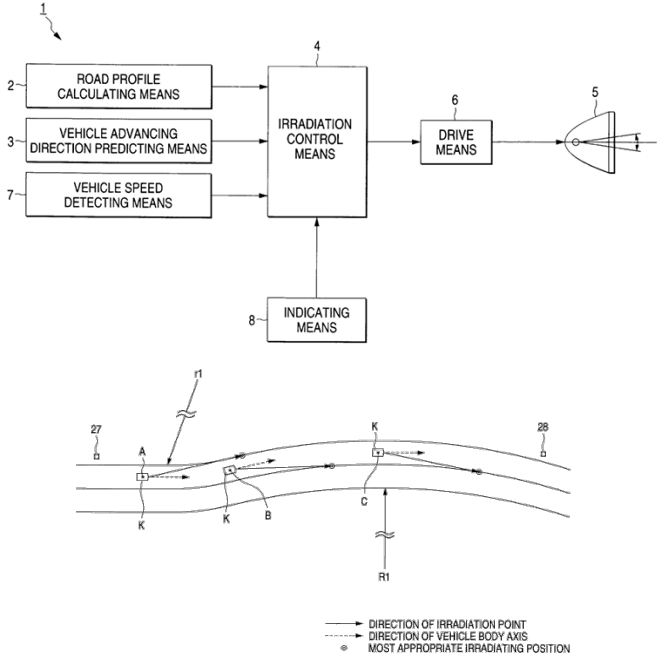

Kobayashi, EX1008, FIGs. 1, 10.

Pet., pp. 74-87, 159-167; POR, pp. 57-60, 83; Pet. Reply, pp. 16-17, 29-30; Jiao Second Dec., EX1051, ¶¶110-117.

IPR2023-00335: Colored Beam Segments (Claims 5/45)

IPR2023-00335			
Claim	Language	Claim	Language
5	a plurality of light sources, wherein one or more of the plurality of light sources comprises at least one of multiple light-emitting-diodes (LEDs) or organic light-emitting-diodes, each light source having a spectral power distribution characteristic and wherein the control circuitry is configured to alter the overall light-cluster spectral power distribution to illuminate **at least one of the at least two sub-sections of the field-of-view with a different color of light** from another of the at least two sub-sections	**45**	a plurality of light sources, wherein one or more light sources of the plurality of light sources comprise at least one of light-emitting-diodes (LEDs) or organic light-emitting-diodes, each light source having a spectral power distribution characteristic alterable, at least responsive to instructions from at least one of the at least one processors, by modifying power to the one or more light sources of the plurality of light sources, resulting in **a color change to projected light from the at least one light-cluster illuminating at least one sub-section** of the field-of-view.

Pet., pp. 43, 71, 136-138; POR, pp. 36-37, 56-57; Pet. Reply, pp. 13-14.

Beam-Thominet Discloses Colored Beam Segments (Claims 5/45)

Thominet's semiconductor light sources 10 are arranged in different beam regions 22, 24, 26, 28 (clusters) for different situations. EX1006, ¶¶7-8, 17-18, 21-29, FIGS. 1-3; EX1003, ¶225. Thominet's "different partial regions [22, 24, 26, 28] emit light of *different colors*" and/or "a *mixture of the colors*." EX1006, ¶¶5, 26-29, claim 3, FIGS. 1B-2; EX1003, ¶225.

Thus, Beam-Thominet's LEDs each have "a spectral power distribution characteristic" (color) and that Beam-Thominet's controller provides different colors to different subsections. EX1006, ¶¶2-5, 26-29, FIGS. 1B-2; EX1005, 3:62-64, 5:3-16, FIGS. 2, 4-6; EX1003, ¶¶226-227.

Petition, pp. 43-44.

226. A POSA would have understood Beam-Thominet's LEDs each have "a spectral power distribution characteristic" (color) and that Beam-Thominet's controller provides different colors to different subsections. EX1006, ¶¶2-5, 26-29, FIGS. 1B-2; EX1005, 3:62-64, 5:3-16, FIGS. 2, 4-6. A spectral power distribution (SPD) is a pictorial representation of the radiant power emitted by a light source at each wavelength expressed in units of W/nm. Thus, different colors (e.g., red, green, blue) have different SPDs (as a function of wavelength) and a mixture of colors alters the overall SPD of the illumination.

231. A POSA would have sought to incorporate *known components* (hardware implementation) of Thominet's colored semiconductor light sources 10 on curved surface 12 (arranged in different beam regions 22, 24, 26, 28, *see* EX1006, ¶¶17-20, 23-26, FIGS. 1-2, 5-7) into Beam's system (with flat array of light sources 401). This would have, like Thominet, provided different colored spatial and spectral distributions for different driving situations (e.g., low visibility,

Jiao First Dec., EX1003, ¶¶226, 231.

Pet., pp. 43-44, 71, 136-138; POR, pp. 36-37, 56-57; Pet. Reply, pp. 13-14; Jiao Second Dec., EX1051, ¶¶96-98.

Beam-Thominet Discloses Colored Beam Segments (Claims 5/45)

(Ex.2006, ¶145.) Even if colored LEDs were included, Beam would, at most, accidentally control them in some situations, but given that this would be entirely unpredictable, no POSA would make this combination in any event.

The Beam+Thominet Combinations do not teach "*illuminat[ing] . . . with a different color of light*," and claim 5 is patentable over the combinations. (Ex.2006, ¶146.)

Patent Owner's Argument, POR, p. 37.

in different driving situations." EX1003, ¶¶229-231; Pet., 43-44. Beam-Thominet's headlight system includes multi-colored LEDs selectively controlled to *illuminate two-subsections* with a different color "for improved visibility in different driving situations." EX1003, ¶229; EX1051, ¶¶96-98; Pet., 43-44.

Pet. Reply, pp. 13-14.

43-44; EX1003, ¶225. A POSA would have sought to incorporate "Thominet's colored semiconductor light sources 10" into Beam's system "to automatically provide different colored spatial distributions for improved visibility in different driving situations." EX1003, ¶¶229-231; Pet., 43-44. As explained in my First Declaration, the combined teachings of Beam and Thominet would have suggested a headlight system including multi-colored LEDs that are selectively controlled to illuminate two-subsections with a different color "for improved visibility in different driving situations." EX1003, ¶229.

Jiao Second Dec., EX1051, ¶98.

Pet., pp. 43, 71, 136-138; POR, pp. 36-37, 56-57; Pet. Reply, pp. 13-14; Jiao Second Dec., EX1051, ¶¶96-98.

IPR2023-00335: Vehicle Identification (Claims 11/50)

IPR2023-00335			
Claim	Language	Claim	Language
11	a computer vison processing unit configured to use the sensor data and one or more of the algorithms to **identify entities including at least one of** beings, **vehicles**, roadway, or street signs and wherein the logical controller is further configured to modify the headlight beam to change illumination of the identified entity.	**50**	a computer vision processing unit configured to use the sensor data to **identify entities including** at least one of beings, **vehicles**, roadway, or street signs, and wherein the processor is further configured to determine modification of the headlight beam to change illumination of the identified entity.

Pet., pp. 47, 72, 141-143; POR, pp. 52, 70-71; Pet. Reply, pp. 14, 28.

Karlsson's Headlight System Identifies Vehicles (Claims 11/50)

Karlsson's controller is "a logical controller." *Supra* Section XI.B.8; EX1003, ¶¶622-626, 719-720. Karlsson identifies "*oncoming traffic*" as it "determin[es] the *direction* and the *intensity* of the detected light 11." EX1010, 2:2-4, Abstract, 12:19-24, FIGS. 3, 14, 3:17-31, 5:16-32; EX1003, ¶721. Karlsson controls its light to emit "a *desired pattern* and a *desired intensity*," and "*memory 51*…may be used for *storing* and recording the *various adjustments*." EX1010, 9:9-17, 21:36-22:4, FIGS. 3, 14-15, 20:1-32; EX1003, ¶722. Thus, Karlsson's processor includes "a computer vis[i]on processing unit" because Karlsson's processor uses incident light data and "one or more…algorithms" to modify illumination to an identified vehicle. EX1010, 2:4-9, 9:9-17, 12:19-24, 20:12-15, FIGS. 14-15; EX1003, ¶¶723-726; EX1001, 63:37-45 ("computer vision methodologies *known in the art*").

Petition, pp. 141-142.

The '503 Patent admits pattern recognition techniques are known in the art

for image processing. The processor based control system for illumination has stored data and programs for driving the LEDs at the correct levels in order illuminate according to recommended lighting practice and stored algorithms which it uses to process pattern recognition, image recognition and other computer vision methodologies known in the art to recognize a particular object, surface or individual as well as distances to surfaces, their color, reflectance and the geometry of the environmental surround. The same image recog-

'503 Patent, EX1001, 63:37-45.

Pet., pp. 141-143; POR, pp. 70-71; Pet. Reply, pp. 28; Jiao Second Dec., EX1051, ¶¶159-160.

Karlsson's Headlight System Identifies Vehicles (Claims 11/50)

Petitioner's proof for identification of oncoming traffic is also flawed, as Petitioner's evidence is literally that Karlsson "determine[s] the direction and intensity of detected light 11." (Petition, 112.) Since it is not an inherent truth that this equates to determining or identifying a vehicle, more explanation needs to be provided, and none is. The proffered evidence of light detection is insufficient on its face to prove "identification of oncoming traffic" as Petitioner contends, and absent in requisite explanation.

Patent Owner's Argument, POR, pp. 70-71.

160. Karlsson's controller distinguishes between "ambient light and light from oncoming traffic." EX1010, 5:16-33. Karlsson's sensor 9 detects "light from oncoming traffic as a parameter to which the pattern of the emitted light beam is to be adjusted." EX1010, 5:16-19. Karlsson describes that light beam 7 is "controlled in such a manner that … light having a low intensity is emitted in those directions from which light is detected by the light-sensitive sensor" such that "glaring or blinding of oncoming traffic is effectively prevent." EX1010, 9:22-25. A POSA would have understood that Karlsson filters between received ambient light and vehicle light to effectively reduce glare for oncoming traffic. By distinguishing between ambient light and light from oncoming traffic, Karlsson's controller identifies vehicles.

Jiao Second Dec., EX1051, ¶160.

Pet., pp. 141-143; POR, pp. 70-71; Pet. Reply, p. 28; Jiao Second Dec., EX1051, ¶¶159-160.

Beam's Headlight System Identifies Vehicles (Claims 11/50)

I. Claim 11

Beam's controller is "a logical controller." *Supra* Section V.B.8; EX1003, ¶¶ 187-190, 246. Beam's processor qualifies as/includes "a computer vis[i]on processing unit" because Beam's processor uses the sensor data and appropriate algorithms to identify vehicles. EX1005, 4:10-25, 5:33-54, 6:12-27, FIGS. 1C-1D; EX1003, ¶¶246-249; EX1001, 63:37-45 ("computer vision methodologies *known in the art*"). Beam's *sensor 107* detects headlights/taillights of an oncoming/preceding *vehicle* 102, 103, thereby identifying it via processor 1105, and "*[p]rocessor 1105* uses appropriate *algorithms* on the incoming data to *determine the locations to be blanked,*" thereby changing illumination of the identified vehicle. EX1005, 4:10-25, 5:33-6:19, FIGS. 1, 1C-1D, 7, Abstract; EX1003, ¶¶246-250.

Petition, pp. 47-48.

The controller module uses the sensor spatial data (video) to determine whether there are illumination sources (headlights or tail lights) present in the headlight's field-of-view, determines their location relative to the Adaptive Anti-Blinding Headlights beam, and uses these data to control the Illuminator. When an oncoming vehicle's headlights are detected (whether or not it is equipped with the AABH system), an area slightly wider than the headlight spacing and approximately six feet high, and whose bottom edge is centered on the oncoming headlights, is dimmed in the beam-bundle of the vehicle equipped with the AABH system. As the positions of both vehicles move, the blanked area tracks the location of the oncoming vehicle, dynamically varying in position and in size. Multiple vehicles (light sources) are

Beam, EX1005, 6:16-27.

Pet., pp. 47-49, 72; POR, pp. 52; Pet. Reply, pp. 14; Jiao Second Dec., EX1051, ¶¶100.

Beam's Headlight System Identifies Vehicles (Claims 11/50)

position and in size." (*Id.*, 6:24-27.) Beam has no ability to associate detected light with a particular target. Beam simply detects illumination sources within the field-of-view and blanks all microbeams associated with the illumination sources. Each subsequent detection of light is performed anew, with no relationship to a prior detection and thus the Beam+Thominet Combination does not "*identify . . . vehicles*" as claimed. (Ex.2006, ¶¶151-152.)

The Beam and Beam+Thominet Combinations do not teach all claim limitations, and claim 11 is patentable over the combinations.

Patent Owner's Argument, POR, p. 38.

FIG. **7** is a block diagram of the electronics portion of controller **108**. The spatial scene data from sensor **107** is thresholded to eliminate weak signals and becomes the input to a processor **1105**. A clock generator **1102** produces a line

Beam, EX1005, 5:45-54.

100. A POSA would have understood Beam's controller does distinguish between light sources, filtering weak signals. EX1005, 5:34-36 (explaining spatial scene data is "thresholded" to eliminate weak signals and becomes the processor input). Beam's system determines a location of the other traffic (via headlights or taillights) using the coordinate-specific information (the video data from the camera). EX1003, ¶¶184-185. In Beam, "[t]he spatial scene data from sensor 107

Jiao Second Dec., EX1051, ¶100.

Pet., pp. 47, 72; POR, pp. 52; Pet. Reply, pp. 14; Jiao Second Dec., EX1051, ¶¶100.

IPR2023-00335: Determine Vehicle Position (Claims 7/8)

IPR2023-00335			
Claim	**Language**	**Claim**	**Language**
7	wherein at least one of the sensors is a **camera-sensor configured to image** at least **lights indicative of oncoming vehicles** … and wherein the logical controller …is configured to use one or more of the **algorithms to determine a position of the oncoming vehicle**, **based on the position of the lights as indicated by the data**, relative to the vehicle headlight system and responsively adapt the headlight beam to decrease at least one vision-disturbing characteristic to the oncoming vehicle driver	**8**	wherein at least one of the sensors is a **camera-sensor configured to image** at least **lights indicative of preceding vehicles** … and where the logical controller upon receiving data, indicating a position of the lights, from the camera-sensor, is configured to use one or more of the **algorithms to determine a position of the preceding vehicle**, **based on the position of the lights** as indicated by the data, relative to the vehicle headlight system and responsively adapt the headlight beam to decrease at least one vision-disturbing characteristic to the driver of the preceding vehicle

Pet., pp. 44-46, 138-140; POR, pp. 69-71 Pet. Reply, pp. 27-28.

Karlsson's Headlight System Determines a Vehicle Position (Claims 7/8)

H. Claims 7/8[15]/47[16]/48[17]

Karlsson's controller is "a logical controller." *Supra* Section XI.B.8; EX1003, ¶¶622-626, 707-710. Karlsson's "light-sensitive sensor" is a video camera sensor, that "determin[es] the *direction* and the *intensity* of the detected light," for example, "light from *oncoming traffic*." EX1010, 2:2-4, Abstract, 12:19-24, FIGS. 3, 14, 3:17-20, 5:16-32, 3:27-31; EX1003, ¶711. Thus, Karlsson determines a vehicle position based on imaged incident light, which includes an oncoming/preceding vehicle. EX1010, 2:2-4, Abstract, 8:19-24, 9:9-26, 11:18-28, 12:19-24, 15:17-22, 17:21-31, FIGS. 3, 14; EX1003, ¶712.

Petition, pp. 138-139.

In the case of sensor means used for detecting ambient light and light from oncoming traffic as a parameter to which the pattern of the emitted light beam is to be adjusted, a preferred embodiment of the invention comprises spotlight sensors in the form of, for example, photosensitive diodes, photo transistors or other light-sensitive semiconductor components, which are spatially distributed in a predetermined manner or at random so as to be capable of detecting light from desired directions or from all directions.

Karlsson, EX1010, 5:16-23.

to be emitted. In the preferred embodiment of the invention, the light-sensitive sensors 9 and 23 are preferably designed to be capable of precisely determining the direction and the intensity of the detected light 11. They may for example be comprised of a matrix of photo diodes or in the case of a light-sensitive sensor 23, a photo-sensitive plate as used in modern video cameras.

Karlsson, EX1010, 12:19-24.

Pet., pp. 138-140; POR, pp. 69-71; Pet. Reply, pp. 27-28; Jiao Second Dec., EX1051, ¶¶157-158.

IPR2023-00335: Camera Sensor (Claims 14/53)

IPR2023-00335	
Claim	**Language**
14/53	wherein the one or more sensors further includes at least one of **a camera**, a microphone, an ultrasonic transducer and receiver, or an electromagnetic radiation source and detector including any of IR, UV, laser, or light.

Pet., pp. 52, 74, 147; POR, pp. 71-75; Pet. Reply, pp. 28-29.

Karlsson Discloses a Camera Sensor (Claims 14/53)

M. Claim 14/53[19]

Karlsson's *sensor 9, 23* is a "video camera[]." EX1010, 12:19-24, FIGS. 3, 14, 21:30-35, 19:18-20:5, 2:2-4, Abstract, 5:16-32; EX1003, ¶¶734-737.

Petition, p. 147.

161. In his Second Declaration of the related '551 proceeding (IPR2023-00315), Dr. Turk admitted that Karlsson's sensor 23 is a camera. EX1070, ¶173

Jiao Second Dec., EX1051, ¶161.

to be emitted. In the preferred embodiment of the invention, the light-sensitive sensors 9 and 23 are preferably designed to be capable of precisely determining the direction and the intensity of the detected light 11. They may for example be comprised of a matrix of photo diodes or in the case of a light-sensitive sensor 23, a photo-sensitive plate as used in modern video cameras.

Karlsson, EX1010, 12:19-24.

173. The alternative embodiments notably rely on different sensors: a "matrix of photo diodes <u>or</u> in the case of a light-sensitive sensor 23, a photo-sensitive plate as used in modern video cameras." (Ex. 1010, 12:22-24.) Only the light modulator embodiment includes a camera. Karlsson illustrates the light-sensitive sensor 23 adjacent to the light modulator 3 in Figures 3, 5a, 7, 10.

Turk's Admission
IPR2023-00315 Turk Dec., EX1070, ¶173.

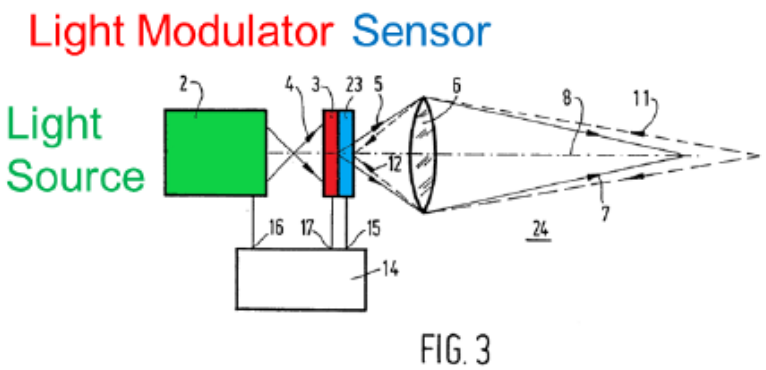

(Ex.1010, Fig. 3; Petition, 67, Annotated)

Turk Second Dec., EX2006, ¶288.

Pet., pp. 147; POR, pp. 71-75; Pet. Reply, pp. 28-29; Jiao Second Dec., EX1051, ¶¶161.

IPR2023-00335: IR/UV Wavelength Light Output (Claims 6/46)

IPR2023-00335			
Claim	Language	Claim	Language
6	wherein the headlight beam further comprises light in at least one of **infra-red (IR)** or **ultra-violet (UV) wavelengths**.	**46**	wherein the light output from at least one headlamp further comprises at least one of **infrared or ultraviolet wavelengths**.

Pet., 87-93, 167-171; POR, pp. 61-63, 86-87; Pet. Reply, pp. 17, 30.

Braun Discloses IR/UV Wavelength Light Output (Claims 6/46)

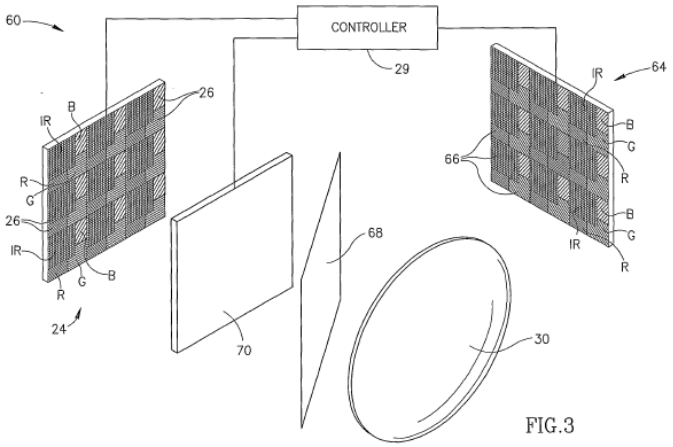

FIG.3

In some embodiments of the present invention, luxels 26 are "color" luxels, for which spectrum and intensity of light provided by the luxels can be controlled to provide different color light. For example, in some embodiments of the present invention, luxels 26 are "RGB" luxels controllable to provide different combinations of R, G and B light so as to control hue, saturation and intensity of light illuminating a scene. In some embodiments of the present invention, luxels 26 are "gray level" luxels that provide light having a fixed spectrum and for which only intensity of light provided by the pixels is varied. In some embodiments of the invention the luxels may comprise binary "on-off" light sources. In some embodiments of the present invention light provided by luxels 26 is not limited to the visible spectrum but may, for example, comprise infrared or ultraviolet light.

Braun, EX1009, 14:21-30, FIG. 3.

Braun's luxels include IR/UV light. EX1009, 14:21-30, 5:22-25, FIGS. 2-3, 5-6, 18:13-14; EX1003, ¶519.

Petition, p. 91.

combine Beam-Thominet. A POSA would have been further motivated to modify Beam-Thominet to include infrared (IR)/ultraviolet (UV) wavelengths, as in Braun (EX1009, 3:4-8, 3:26-27, 8:4-5, 9:23-28, 14:21-30, 18:13-14, 19:9-21, 20:25-21:16, FIGS. 3-6), to further control Beam-Thominet's adaptive headlamps to illuminate a roadway, thereby improving visibility and driver safety—an express

Jiao First Dec., EX1003, ¶¶506, 865 (Karlsson-Harbers).

Pet., 87-93, 167-173; Jiao First Dec., EX1003, ¶506-536, 849-876; POR, pp. 61-63, 86-87; Pet. Reply, pp. 17, 30; Jiao Second Dec., EX1051, ¶¶118-121, 172-175.

Braun Discloses IR/UV Wavelength Light Output (Claims 6/46)

Petitioner does not explain how Beam's LED arrays and Braun's luxels would have been combined, or what additional changes would be needed to combine or substitute the light sources. LED headlamps were in their infancy in the early 2000's, therefore there were no "predictable solutions," nor was there a "reasonable expectation of success." Designing an LED Headlamp for a vehicle application requires consideration and tradeoffs involving complex and interrelated optics, heat management, white LED lumen output, packaging, and cost issues. (Ex.2006, ¶¶29-38, 240.)

Patent Owner's Argument
POR, p. 62.

119. Dr. Turk shows his lack of understanding of the art in asserting that "there were no 'predictable solutions'" for combining Braun's luxels with Beam's modified headlight system. EX2006, ¶240.

•••

¶515. Beam-Thominet and Braun are from the same field—controllable headlamps with dynamic illumination—and include the same building blocks (e.g., light sources, sensors, controllers). EX1005, 3:8-45, 6:53-7:13, 1:54-59, 4:48-59; EX1009, 21:1-4, 21:9-12, 22:19-23, 6:4-51, 5:27-31, 11:26-30 ("*maximize visibility*"), 26:29-27:4, 22:24-25; EX1003, ¶507. Braun's luxels and Beam's light sources are both LEDs. EX1003, ¶515. Notably, Braun's luxels were already implemented in a glare-preventing "adaptive illumination" headlight system. EX1003, ¶528; EX1009, 6:4-8.

Jiao Second Dec., EX1051, ¶¶119-120.

Pet., pp. 87-93, 167-171; Jiao First Dec., EX1003, ¶506-536, 849-876; POR, pp. 61-63, 86-87; Pet. Reply, pp. 17, 30; Jiao Second Dec., EX1051, ¶¶118-121, 172-175.

Appendix

Karlsson Discloses Light Sources Aimed at Different Angles ([20.2]/[59.2])

The spotlight beams 34 may also be made up of suitable modulator means, for example light modulator means which are built up of a grid of light modulators which can be switched individually, which light modulators can be controlled to transmit light, to block light and/or to reflect light, depending on the type that is used. In the simplest

Karlsson, EX1010, 14:5-9.

in my First Declaration, a POSA would have understood that Karlsson's grid of modulators allow light to be aimed at different angles by reflecting light. EX1003, ¶¶368-369; EX1010, 14:9-15. Karlsson describes its modulators are "controlled to transmit light to a specified degree, so that a desired light intensity can be adjusted for each individual spotlight beam 34." EX1010, 4:1-15.

-197 Jiao Second Dec., EX1051, ¶134.

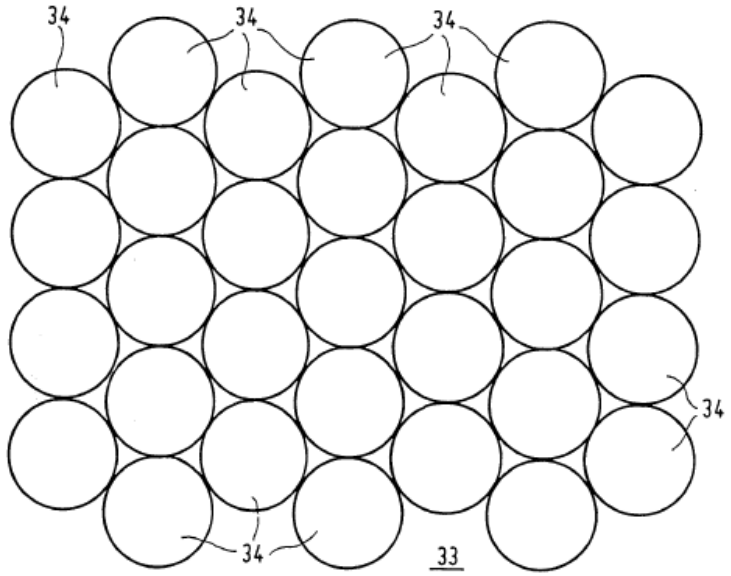

Karlsson, EX1010, FIG. 6.

-197 Pet., Paper 1, pp. 77; -197 Jiao First Dec., EX1003, ¶¶368-369; -197 Pet. Reply, Paper 22, p. 8; -197 Jiao Second Dec., EX1051, ¶¶132-135.

Motivation to Combine Harbers's Beam Segments with Karlsson

346. *First*, including an additional or alternative control technique (software implementation) for Karlsson—Harbers's *known technique* of using multiple directional beam segments for different functions—would have added more control methods for different functions to Karlsson's visibility for different driving situations, thereby increasing safety. This is a simple software combination.

-197 Jiao First Dec., EX1003, ¶346.

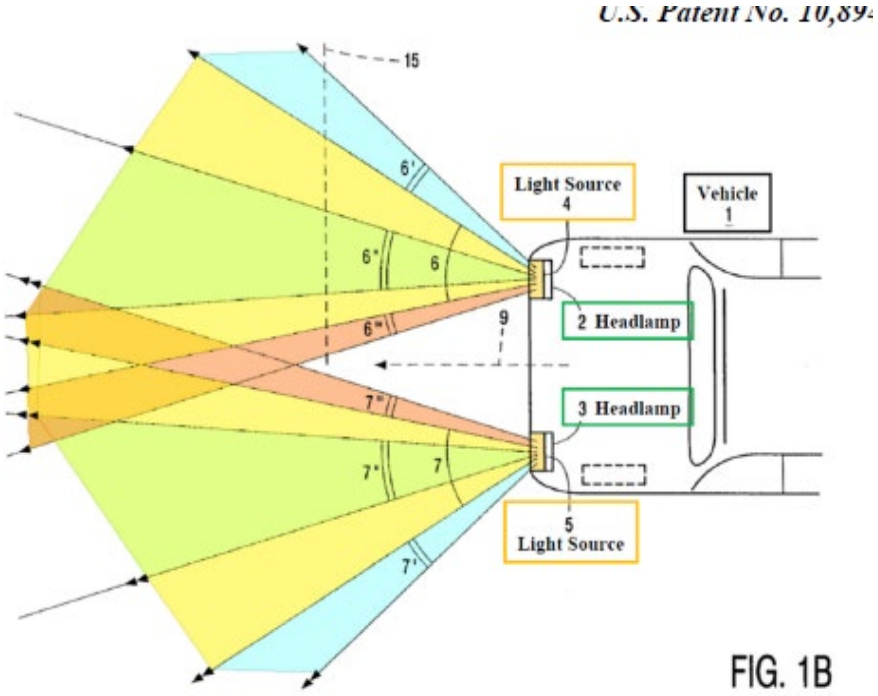

Harbers, EX1011, FIG. 1B (annotated).

-197 Pet., Paper 1, pp. 80-87; -328 Pet., Paper 2, pp. 81-86; -335 Pet., Paper 2, pp. 81-86; -197 Jiao First Dec., EX1003, ¶¶343-359; -328 Jiao First Dec., EX1003, ¶¶445-460; -335 Jiao First Dec., EX1003, ¶¶549-564.

Karlsson's/Harbers's Headlight Systems Are Fully Compatible

Karlsson's Adaptive LED Array Does Not Default to "all LEDs on"

The emitted light beam 50 is represented as a window which can shift in the plane of the drawings from the left to the right and from the top to the bottom, if desired, and vice versa, and which may vary as regards its shape and dimension in dependence on the desired pattern and direction of the beam.

Karlsson, EX1010, 19:29-33.

156. The annotation demonstrates the variability of Karlsson's spotlight beam. Karlsson expressly states that "[t]he *emitted light beam 50 is represented as*

-197 Jiao Second Dec., EX1051, ¶156.

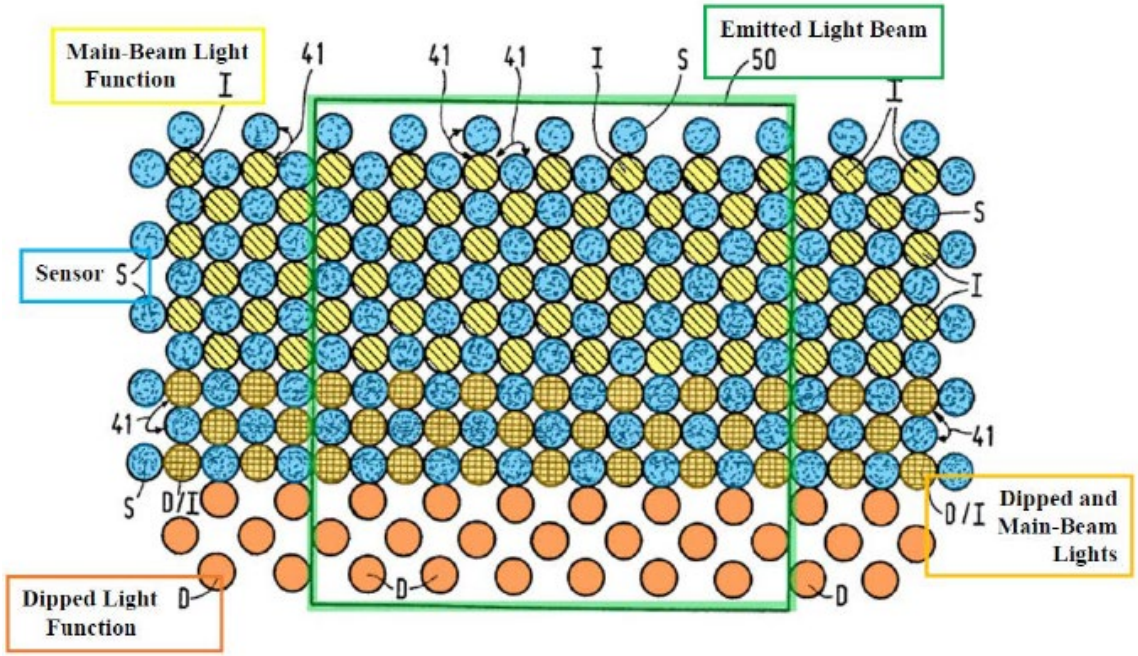

Karlsson, EX1010, FIG. 14 (annotated).

-197 Pet. Reply, Paper 22, pp. 15-17; -197 Jiao Second Dec., EX1051, ¶¶154-161; -328 Pet. Reply, Paper 25, pp. 15-17; -328 Jiao Second Dec., EX1051, ¶¶138-145; -335 Pet. Reply, Paper 24, pp. 23-25; -335 Jiao Second Dec., EX1051, ¶¶142-149.

Karlsson's Headlight Beam Includes a Second Subsection Not Including a Detected Vehicle [20.10]/[26.5]/[65.4]

subsections where vehicle headlights are detected. EX1003, ¶¶478-482. Karlsson's

Beam 50 corresponds to a subsection where vehicle headlights are *not* detected.

EX1003, ¶¶483-486.

-328 Jiao Second Dec., EX1051, ¶128.

When the lighting device 1 is used as a headlight in a car, the pattern and the intensity of the light beam 7 are, for example, controlled in such a manner that no light at all or light having a low intensity is emitted in those directions from which light is detected by the light-sensitive sensor 9. In this manner glaring or blinding of

Karlsson, EX1010, 9:18-22.

A desired pattern and/or a desired intensity of the light beam 33 to be emitted can be simply effected by switching one or more of the spotlight beams 34 on and/or off, or by adapting the intensity of the light emitted by a spotlight beam 34.

Karlsson, EX1010, 13:33-36.

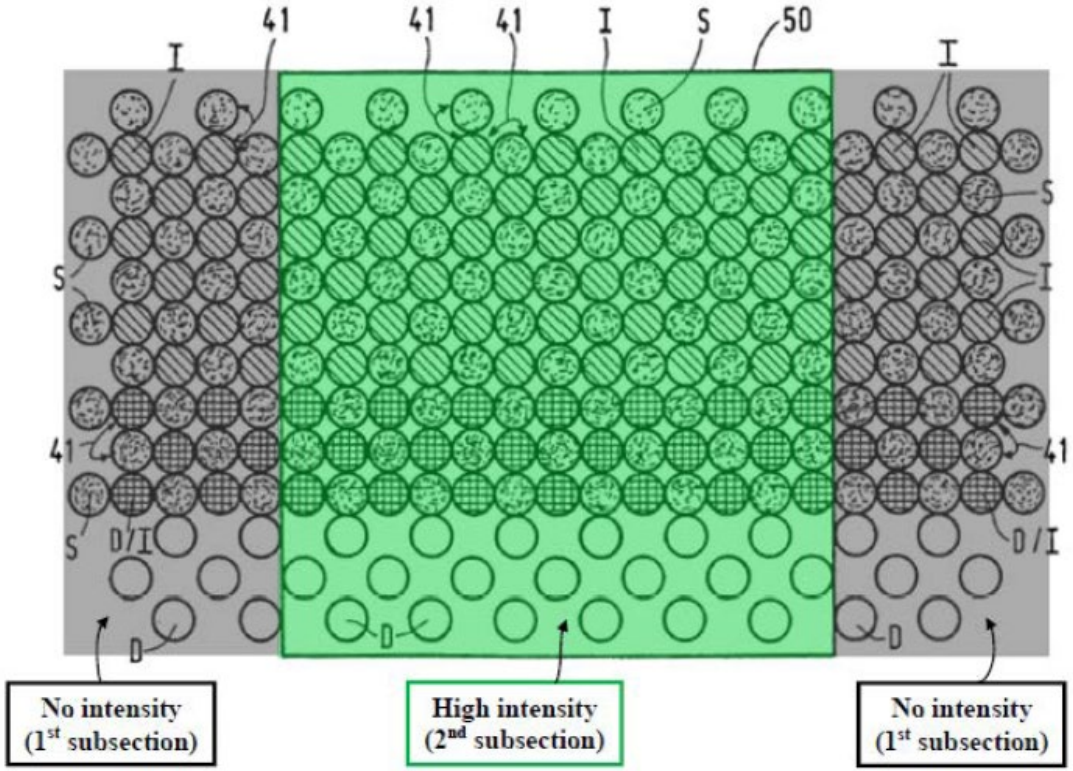

Karlsson, EX1010, FIG. 14 (annotated).

-328 Pet., Paper 2, pp. 91-102; -328 Jiao First Dec., EX1003, ¶¶478-495; -328 POR, Paper 20, pp. 58-64; -328 Turk Second Dec., ¶¶259-279; -328 Pet. Reply, Paper 25, pp. 10-12; -328 Jiao Second Dec., EX1051, ¶¶124-129.

Beam Discloses Light Sources Aimed at Different Angles ([20.2]/[59.2])

Beam's headlight includes three directional light sources aimed at different angles with its lamp 202/LEDs 401 (emitter) and spatial-light-modulator (SLM)

-197 Pet. Reply, Paper 22, p. 6.

19 Therefore, my understanding of figure 4
20 is -- is the same illustration for Beam's disclosure
21 where 401 is replaced of 202 in figure 2 and 203
22 function as micro- – microbeam sources. The POSA
1 would understand reading Beam's and 401 cannot be
2 only emitters because emitter has no directionality
3 and micro -- microbeam sources as directional is
4 narrow-angle direction; therefore, the 401 is the
5 combination of the emitter and spatial light
6 modulator.

Jiao Dep. Transcript, EX2026, 74:19-75:6.

66. A POSA would have understood that Beam's microbeam sources include both an emitter and an optical element to control the intensity and the angular position of the microbeams. *See* EX1003, ¶70 ("Therefore, in my opinion, a POSA would have understood that 'light sources" includes … *the combination of light sources and spatial light modulators*, for example, *microbeam sources* and spotlight beam sources.") This is consistent with what is recited in the claims. Claim element [20.2] recites "*directional* light sources." In order to be "directional," a POSA would have understood that the emitter of the light source is combined with an optical element. For example, combining an emitter, such as Beam's lamp or LEDs, with SLM outputs a directed "narrow beam." A POSA would have understood that a light emitter, without an optical element to collect and collimate light, will not be directional. Indeed, for any type of light emitting source, including incandescent filament, high-intensity discharge arc, LED die, etc., without optical control element, the light emission is omnidirectional.

-197 Jiao Second Dec., EX1051, ¶66.

-197 Pet., Paper 1, pp. 23-25; -197 Pet. Reply, Paper 22, pp. 6-7; -197 Jiao First Dec., EX1003, ¶¶70, 147; -197 Jiao Second Dec., EX1051, ¶¶50-57, 61-68.

Motivation to Combine Thominet's Beam Segments with Beam

155. *First*, including an additional or alternative control technique (software implementation) for Beam—Thominet's *known technique* of using multiple directional beam regions for different functions—would have added more control methods for different functions to Beam's visibility for different driving situations, increasing safety. This is a simple software combination. Beam discloses "[t]he *angular* position" of each microbeam can be set by controller 108, which commands SLM 203 in illuminator 109, to reduce glare. EX1005, 4:26-59, 5:3-21, FIGS. 1-2, 5; EX1005, Abstract, 8:4-17.

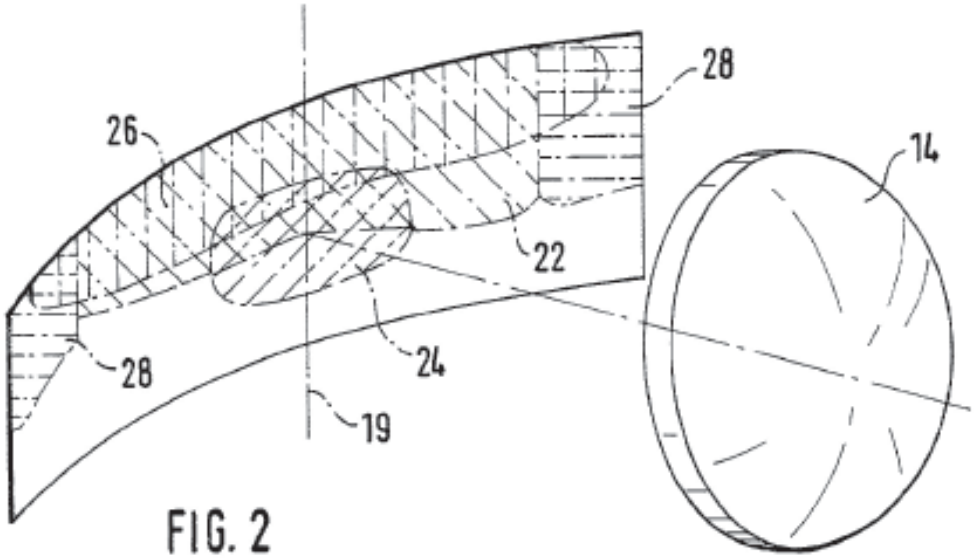

Thominet, EX1006, FIG. 2 (annotated).

-197 Pet., Paper 1, pp. 25-33; -328 Pet., Paper 2, pp. 10-17; -335 Pet., Paper 2, pp. 10-15; -197 Jiao First Dec., EX1003, ¶¶123-141; -328 Jiao First Dec., EX1003, ¶¶121-139; -335 Jiao First Dec., EX1003, ¶¶121-139.

PO is Wrong about Beam's "Maximum Intensity" Statements

In response to these prior art problems, Beam's solution is to provide "the equivalent of high beam headlights or brighter on at all times, greatly enhancing the ability to see at night" (*Id.*, 6:53-56) except for areas where incoming light is detected. (Ex.2006, ¶155.) Since Beam is already putting maximum intensity light everywhere it can, there is no light left to place or move or add; thus there would be no reason to provide the ability to change the direction of microbeams in the AABH system or point or direct light in any particular direction. (Ex.2006, ¶155.)

Patent Owner's Argument
-197 POR, Paper 18, p. 46.

15. But in the automotive lighting context, a POSA would have readily understood that "intensity" refers to luminous intensity measured in the unit candela (cd) in the International System of Units. EX1041, 18. The candela value is a measurement of luminous flux per unit solid angle emitted by a light source *in a particular (or a given) direction*. It is a quantitative measurable widely known and regularly used by a POSA in the field of lighting including automotive lighting. It is not, contrary to Dr. Turk's misunderstanding, similar to or synonymous with "brightness," which is a human perception measurement. *See*

-197 Jiao Second Dec., EX1051, ¶15.

-197 Pet. Reply, Paper 22, pp. 12-15; -197 Jiao Second Dec., EX1051, ¶¶90-107; -328 Pet. Reply, Paper 25, pp. 12-15; -328 Jiao Second Dec., EX1051, ¶¶77-95; -335 Pet. Reply, Paper 24, pp. 8-10; -335 Jiao Second Dec., EX1051, ¶¶76-93.

Beam's/Thominet's Headlight Systems Are Fully Compatible

Beam controls the angular position of microbeams

This invention relates to the production of a beam of light comprised of many microbeams, controlled by incoming radiation, employing a sensor to determine the location of light sources forward of the apparatus and using that information to control the intensity, and/or the angular position, of one or more narrow-angle microbeams, which are part of a large number of beams comprising the overall output beam.

Beam, EX1005, Abstract.

-197 Pet. Reply, Paper 22, pp. 12-15; -197 Jiao Second Dec., EX1051, ¶¶90-107; -328 Pet. Reply, Paper 25, pp. 12-15; -328 Jiao Second Dec., EX1051, ¶¶77-95; -335 Pet. Reply, Paper 24, pp. 8-10; -335 Jiao Second Dec., EX1051, ¶¶76-93.

Beam-Thominet's Headlight Provides Sufficient Forward Illumination

The use of Thominet's clustered regions for predefined functions, when coupled with Beam's LED array, would compromise the ability of the combined system to deliver forward illumination. Because groupings of LEDs would be assigned to predefined functions, e.g., to produce light of different colors (for a signal function and a headlight), a concentric high beam, a horizontally dispersed light beam with wider front illumination or to provide "one-side oriented light", in operation, entire LED clusters would be unavailable to provide forward illumination. Considering the relevant state of the art, and limitations surrounding

Patent Owner's Argument
-197 POR, Paper 18, p. 44.

"aimed at different angles." Combining Thominet with Beam would have made Beam's system more direct, or active, or specifically aimed for different functions than prior systems, as Beam seeks to do (*see* EX1005, 2:15-22), and further achieves Beam's purpose of improving driver safety.

-197 Jiao First Dec., EX1003, ¶128.

102. Adding Thominet's multiple directional beam regions "would have provided Beam's system with different spatial distributions for different driving situations beyond reducing glare for drivers." EX1003, ¶160. In doing so, Beam-Thominet's light beam would have been spatially distributed to where illumination is desired for the driver according to the particular driving function. EX1003, ¶128. Thus, Beam-Thominet's LED/SLM headlight system provides *sufficient forward illumination* for each particular driving situation.

-197 Jiao Second Dec., EX1051, ¶102.

-197 Pet. Reply, Paper 22, pp. 12-15; -197 Jiao Second Dec., EX1051, ¶¶90-107; -328 Pet. Reply, Paper 25, pp. 12-15; -328 Jiao Second Dec., EX1051, ¶¶77-95; -335 Pet. Reply, Paper 24, pp. 8-10; -335 Jiao Second Dec., EX1051, ¶¶76-93.

Beam Discloses Illuminance Below a Predefined Threshold ([59.9]/[65.6]/[37.8])

188. Moreover, there is a **determination** of this illumination, it is not the result of spillover illumination from a high-beam region, because the illumination that "illuminates the first subsection" is actually determined. Beam, which utilizes a blanking strategy, provides no illumination directed at the "blanked area" because it either blocks lamp 202 emission towards that area via the SLM or changes LEDs responsible for that area to a non-emitting state. (Ex. 1005, 4:36-40,

Patent Owner's Argument
Turk Second Dec., EX2006, ¶188.

Q. So what does "attenuation" mean in this context?

MS. SHAH: Objection. Asked and answered.

THE WITNESS: Generally, it means decreased.

EX1054, 95:6-23 (Dr. Turk acknowledging that Beam's "attenuation" is a decrease of light).

Beam's first subsections are not completely darkened.

74. Dr. Turk fails to recognize that the blanked area corresponding to the detected vehicles is still illuminated but at "reduced significantly" compared to the remaining areas of the headlamps' field-of-view. EX1005, 4:19-25. Beam describes that "the area of the beam that would dazzle the driver will be darkened," not completely darkened. EX1005, 2:60-61. Thus, Beam's headlamp system does determine to illuminate a first subsection below a predefined illuminance, as

Jiao Second Dec., EX1051, ¶74.

cal system **106** to illuminate an area shown as **101**. The vehicles shown in various circles **104** and **105** correspond to the vehicles in circles **102** and **103** with the illumination in the shaded areas being reduced significantly to protect the vision of the oncoming drivers.

Beam, EX1005, 4:21-25.

-197 POR, Paper 18, pp. 52; -328 POR, Paper 20, pp. 43; -335 POR, Paper 19, pp. 51-52.; -197 Pet. Reply, Paper 22, pp. 21-23; -197 Jiao Second Dec., EX1051, ¶¶114-116; -328 Pet. Reply, Paper 25, pp. 9; -328 Jiao Second Dec., EX1051, ¶¶72-74; -335 Pet. Reply, Paper 24, pp. 7-8, 12-13; -335 Jiao Second Dec., EX1051, ¶¶66-68.

Stam Discloses a Predefined Illuminance/Threshold

Known vehicle high beam headlamp emissions in accordance with the DOT regulations limit the intensity to 40,000 cd at 0°, 10,000 cd at 3°, 3250 cd at 6°, 1500 cd at 9°, and 750 cd at 12°. An example of an emission pattern meeting this regulation is illustrated in Fig. 1 of U.S. Patent No. 5,837,994, entitled CONTROL SYSTEM TO AUTOMATICALLY DIM VEHICLE HEADLAMPS, issued to Joseph Scott Stam et al. on Nov. 17, 1998. In order to avoid an illuminance of 0.1 foot candles (fc) incident on another vehicle at these angles, the vehicle high beam headlamps should be dimmed within 700 feet of another vehicle if the vehicles are at an angle of 0°, within 350 feet of another vehicle if the vehicles are at a horizontal position of 3°, and 200 feet of the other vehicle if the position of the other vehicle is at an angle of 6° to the longitudinal axis of the controlled vehicle. It can thus be seen that a preceding vehicle directly in front of the

Stam, EX1007, 1:14-31.

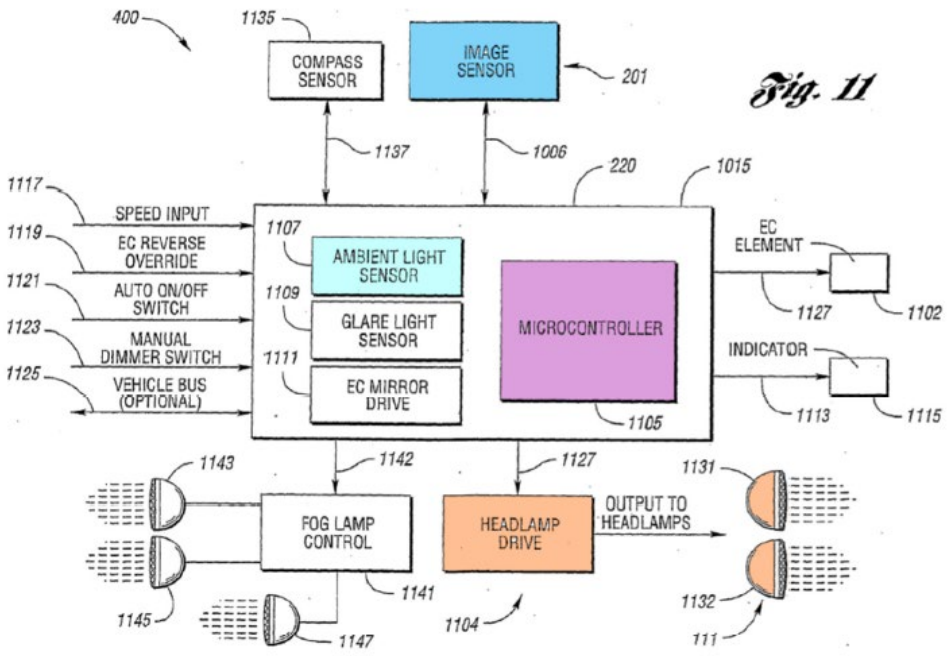

Stam, EX1007, FIG. 11 (annotated).

-197 Pet., Paper 1, pp. 16, 53-55, 63; -328 Pet., Paper 2, pp. 40-42, 46, 49; -335 Pet., Paper 2, pp. 55-58, 61; -197 Jiao First Dec., EX1003, ¶¶275-287; -328 Jiao First Dec., EX1003, ¶¶240-256, 263-268; -335 Jiao First Dec., EX1003, ¶¶333-349.

Kobayashi Discloses Road Curvature Limitations (21-23/60-62)

A lighting device in which the vehicle advancing direction at which a driver aims is predicted, and the irradiating direction and irradiating range of a lighting device are controlled by comparing the result of the prediction to the information of the profile of a road on which the vehicle is running at present. The lighting device (1) includes a road

Kobayashi, EX1008, Abstract.

combine Beam-Thominet. A POSA would have been further motivated to modify Beam-Thominet to adjust light based on map data, including road curvature as in Kobayashi, to further control Beam's directional microbeams to illuminate roadway curves, thereby improving driver safety—an express purpose of Beam/

Motivation to Combine Kobayashi with Beam-Thominet
-197 Jiao First Dec., EX1003, ¶296.

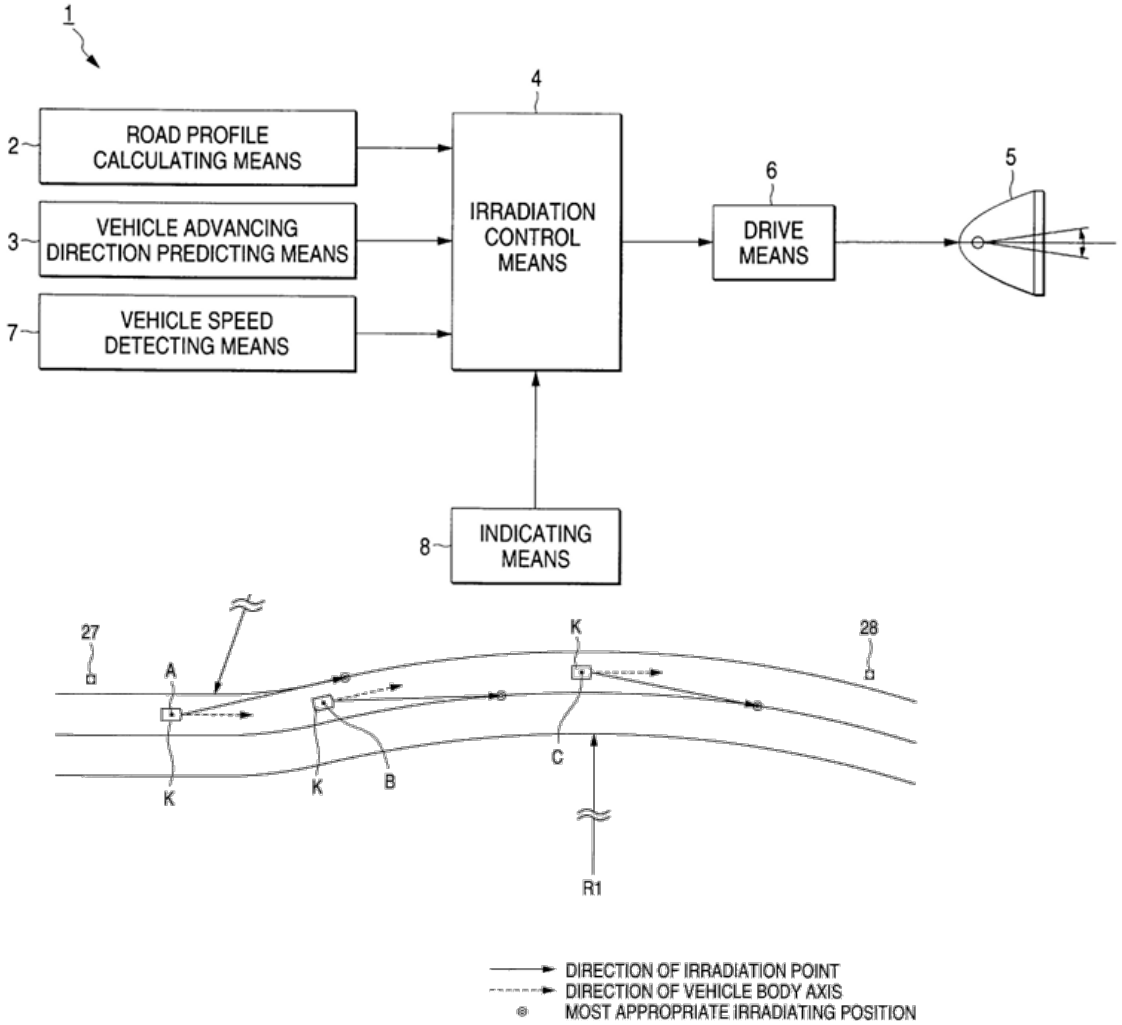

Kobayashi, EX1008, FIGs. 1, 10.

-197 Pet., Paper 1, pp. 64-76; Jiao First Dec., EX1003, ¶¶296-331; -197 POR, Paper 18, pp. 59-60; -197 Pet. Reply, Paper 22, pp. 25-26.

Motivation to Combine Kobayashi with Beam-Thominet

A POSA would have been motivated to combine Kobayashi because Beam's microbeams can change direction.

(citing EX1005, 6:30-33). Beam's microbeams *must* be able to change direction in order to achieve at least the high beam and low beam functions that a POSA would have readily understood. Beam does not, however, disclose to a POSA that it is unable to *increase light in a direction* by virtue of its "maximum intensity"—which is not "maximum brightness." A POSA would have well understood that the term "maximum intensity" is related to the light intensity level that varies in different angles for different headlight functions (such as high beam or low beam).

-197 Jiao Second Dec., EX1051, ¶123.

through beamsplitter **201** and out optical system **106**. Thus we produce an overall beam pattern comprising many (in this embodiment, ~300 000) individual narrow-angle microbeams of light, as contrasted with conventional headlights, which produce only a single beam. These microbeams are arranged in an X-Y matrix. The angular position or attenuation of each of these microbeams is independently set by the controller **108**. Controller **108** selectively commands

5. The anti-blinding illumination system as set forth in claim **1** wherein said light source includes an array of individual independently controllable microbeam sources selected from the group consisting of light-emitting diodes, lasers, incandescent lamps, arc lamps and electroluminescent lamps.

Beam, EX1005, 4:41-48, claim 5.

-197 POR, Paper 18, pp. 59-60; -328 POR, Paper 20, pp. 46-50; -335 POR, Paper 19, pp. 16-17.; -197 Pet. Reply, Paper 22, pp. 13, 25-26; -197 Jiao Second Dec., EX1051, ¶¶120-123; -328 Pet. Reply, Paper 25, pp. 19-21; -328 Jiao Second Dec., EX1051, ¶¶100-107; -335 Pet. Reply, Paper 24, pp. 9; -335 Jiao Second Dec., EX1051, ¶¶110-117.

Gotou Discloses Road Curvature Limitations (21-23/60-62)

A head lamp device for a vehicle in which a lighting region in front of the vehicle in a traveling direction can be adjusted in rightward and leftward directions comprises: a direction

Gotou, EX1012, Abstract.

combine Karlsson-Harbers. A POSA would have been further motivated to modify Karlsson-Harbers to adjust light based on map data including road curvature, as in Gotou, to further control Karlsson-Harbers's directional spotlight beams to illuminate roadway curves, thereby improving driver safety—an express purpose of Karlsson. EX1010, 1:16-26, 4:17-21, 9:18-26.

Motivation to Combine Gotu with Karlsson-Harbers
-197 Jiao First Dec., EX1003, ¶439.

FIG.8

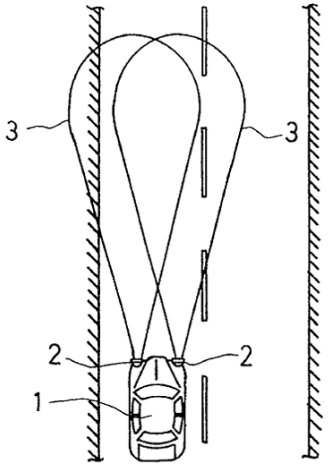

FIG.9

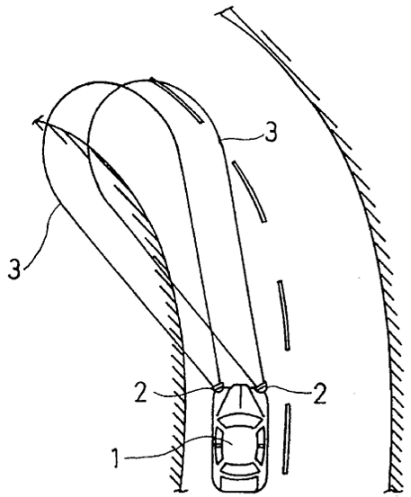

Gotou, EX1012, FIGs. 8, 9.

-197 Pet., Paper 1, pp. 113-125; -197 Jiao First Dec., EX1003, ¶¶439-469; -197 POR, Paper 18, p. 73; -197 Pet. Reply, Paper 22, pp. 26-27.

Motivation to Combine Gotou with Karlsson-Harbers

A POSA would have been motivated to combine Gotou because Karlsson's spotlights can change direction.

It is unclear that Karlsson's hardware could achieve Gotou's desired change, lacking directional control because the modulator merely controls intensity. (Ex. 1010, 14:12-15; Ex.2006, ¶237.) Moreover, the control is explained as nothing

Patent Owner's Argument,
-197 POR, Paper 18, p. 73.

174. A POSA would have understood that Karlsson-Harbers-Gotou beam patterns—like known adaptive beam patterns at the time—would vary in direction, length, and width (angular distribution) from a bird's eye view, or driver's view with varying intensity points along a projected distance. EX1051, ¶¶156-157;

-197 Pet. Reply, Paper 22, p. 26.

-197 POR, Paper 18, pp. 73; -328 POR, Paper 20, pp. 68-69; -335 POR, Paper 19, pp. 83.; -197 Pet. Reply, Paper 22, pp. 26-27; -197 Jiao Second Dec., EX1051, ¶¶173-178; -328 Pet. Reply, Paper 25, pp. 21-24; -328 Jiao Second Dec., EX1051, ¶¶156-164; -335 Pet. Reply, Paper 24, pp. 29-30; -335 Jiao Second Dec., EX1051, ¶¶162-171.

IPR2023-00197: Claims 60-62 Are Patentably Indistinct from Claims 21-23

Claim	Language	Claim	Language
21	wherein the processor is further configured to determine at least a road curvature …and to **direct the control circuitry** to adjust the directional light sources to increase illumination in a direction of the road curvature.	**60**	wherein at least one of the at least one processors is further configured to determine at least a road curvature … and to **determine light output** that aims illumination in a direction of the road curvature.
22/23	wherein the processor is further configured to determine at least a planned upcoming turn … and to **direct the control circuitry** to increase illumination illuminating the turn	**61/62**	wherein at least one of the at least one processors is further configured to determine at least a planned upcoming turn … and to **determine light out**put that illuminates the turn.

are not patentably indistinct from their respective referential claim. Referential claims 21-23 and 25 provide an instruction for the control circuitry; by contrast, claims 60-62 and 64 require the processor to **determine light output** — the claims have material differences on their face, differences *completely unaddressed* by Petitioner.

Patent Owner's Argument,
-197 POR, Paper 18, p. 29.

equates to increasing illumination in a direction of the road curvature. A POSA would have also understood that directing control circuitry to increase illumination would include determining a light output to illuminate the turn. Specifically, a POSA would have understood an automotive headlight controller would determine a light output before commanding the light source to emit a light beam.

-197 Jiao Second Dec., EX1051, ¶129.

-197 POR, Paper 18, pp. 26-29; -197 Pet. Reply, Paper 22, pp. 29-30; -197 Jiao Second Dec., EX1051, ¶¶128-129.