> exclusively from animal sources and its intake has been shown to have a positive correlation with iron status (p. 1520/Results and Discussion). Proulx et al. teach that the incorporation of animal sourced heme iron is often unfeasible because of economic costs and because cultural and religious barrier forbid the consumption of meat (p. 1520-1521/Results and Discussion).

(OA at pages 8-9). In essence, the Office has defined a problem (iron deficiency as a major nutritional problem) and points to Proulx as motivation (i.e., a solution) to add leghemoglobin to any and every food composition, regardless of 1) which food types might benefit from iron fortification and 2) the matrix of the food to be fortified. This broad application of Proulx goes too far. Proulx does not mention or provide any relevant data for meat analogs which might benefit from iron fortification, and certainly never discusses fortifying any type of meat analog or meat alternative (variously referred to as meat substitutes, meat replicas and/or protein-based non-meat alternatives). "Defining the problem in terms of its solution reveals improper hindsight in the selection of the prior art relevant to obviousness." *Monarch Knitting Machinery Corp. v. Sulzer Morat GmbH*, 139 F.3d 877, 881 (Fed.Cir.1998).

Moreover, one of ordinary skill would understand from Proulx's own later teachings that the inclusion of iron can cause changes in the organoleptic qualities of a food, including causing the food to taste bad through oxidative rancidity. For example, the Proulx Thesis discloses that "[i]ron compounds should be added to the level *up to which they do not change the organoleptic qualities* of the food, usually between 20 ppm and 40 ppm" (see page 29; emphasis added). In addition, the Proulx Thesis states that "[f]ortification [with] iron has *a potential negative effect on organoleptic quality* of maize products, in that soluble forms of iron can cause *oxidative rancidity*" (see page 20; emphasis added). In sum, Proulx does not provide any instructions or guide posts for one of ordinary skill in the art to add the Proulx heme-containing protein to a meat analog, but instead implicitly cautions those skilled in the art against doing so.

C. <u>The prior art does not recognize there is a problem of iron deficiency in of meat analogs or other meat alternatives.</u>

At the time the present application was filed, iron supplementation of meat analogs or meat alternatives was not a recognized problem in the art. As shown above, Hsieh and Proulx are silent with respect to either the problems of iron deficiency or the need for iron supplementation or fortification in meat analogs. Other published literature, as discussed below,

confirms the conclusion that iron supplementation of meat analogs or meat alternatives was not a recognized problem to the skilled artisan.

Asgar et al. (2010, *Comprehensive Rev. Food Sci. Food Safety*, 9:513-29; hereafter "Asgar"), which provides a self-described "comprehensive" review (see the "Acknowledgments" section on page 525) of non-meat protein sources that can be used in meat extenders and meat analogs, contains no mention of a need for iron supplementation, not even in the section entitled "Advantages and disadvantages of nonmeat protein" (*see* page 516). Significantly, Asgar never mentions including iron or a heme-containing protein in a meat analog, for any reason. In fact, Table 3, which provides "typical meat analog ingredients and their purpose," (page 522 of Asgar; originally from Egbert and Borders 2006) and includes both flavors and coloring agents, does *not* include any sources of iron, let alone mention a heme-containing protein.

Van den Briel et al. (EP 1759593; hereafter "Van den Briel") describes a minced meat analog that includes fibers made with proteins and cross-linked polysaccharides; some of which are white-colored and others of which are coated with a fat that includes a red coloring substance (*see*, for example, paragraphs [0008], [0009], [0014] and [0019]). Van den Briel is completely silent with respect to iron supplementation. Significantly, Van den Briel describes the desirability of the red coloring substance to "discolour when subjected to severe heating conditions, such as those employed in shallow frying, deep frying or roasting" (*see* paragraph [0021]) and, in the same paragraph, describes that a "particularly suitable red colouring substance that exhibits this kind of discolourisation behavior is betanin" in the form of beet extract (see paragraph [0021]). While clearly demonstrating the desirability of including a colorant in the compositions that would change upon cooking, Van den Briel nevertheless does not disclose using iron or heme proteins as potential meat colorants.

Further, Rolan et al. (US 2008/0268112; hereafter "Rolan") is directed toward a "Ground Meat and Meat Analog Compositions Having Improved Nutritional Properties" (*see* the title). Although clearly focused on providing ground meat and meat analog compositions having improved nutritional properties, Rolan is silent with respect to the desirability of including an iron supplement in a meat analog, and is similarly silent regarding the issue of iron bioavailability in a meat analog or meat alternative, despite the fact that Rolan discusses various other nutritional aspects of meat and meat analogs. *See*, for example, paragraphs [0038], [0092]

and [0100] in Rolan. Indeed, according to Rolan, "the ground meat compositions of the invention have improved nutritional properties, such as reduced fat and cholesterol, without sacrificing the flavor, texture, mouth feel, and aroma of ground animal meat" (paragraph [0017]), yet the desirability of including an iron source for any purpose, such as for its nutritional supplementation value, for flavor, or for coloring is not discussed.

II. The Office has not met its *prima facie* burden of establishing a reasonable expectation of success in modifying Hsieh with Proulx.

The Office has not met its burden in establishing that the skilled artisan would have a reasonable expectation of success in using a heme-containing protein to achieve iron supplementation of a consumable product as presently claimed. In fact, a skilled artisan would not have had a reasonable expectation of success in modifying the meat analog of Hsieh to include the leghemoglobin of Proulx at least because a skilled artisan would have understood:

A. The effect of the food matrix on the bioavailability of iron was unpredictable; and

B. The effect of a heme-containing protein on the organoleptic properties of a food product was unpredictable, if not expected to be likely negative.

A. The effect of the food matrix on the bioavailability of iron was unpredictable.

The Office-cited reference, Hsieh, as well as a number of Applicants-cited references, including Asgar, Van den Briel and Rolan, all are silent with respect to the desirability of including an iron supplement in a meat analog or meat alternative, and all are similarly silent regarding the issue of iron bioavailability in a meat analog or meat alternative, despite the fact that each of those references discuss various nutritional aspects of meat and meat analogs. *See*, for example, paragraph bridging pages 513-514 in Asgar; paragraph [0002] in Van den Briel; and paragraphs [0038], [0092] and [0100] in Rolan.

Proulx does not cure these deficiencies of Hsieh; similarly, Proulx does not cure the deficiencies of Asgar, Van den Briel, or Rolan. As discussed herein, the particular type of food (*e.g.*, the food matrix) is an important factor in determining the bioavailability of iron. Accordingly, it would not have been reasonably predictable to the skilled artisan from Hsieh (or Asgar, Van den Briel or Rolan) that the leghemoglobin of Proulx would effectively function as an iron fortificant in any food product, much less the meat analog of Hsieh. Thus, the skilled

artisan would have not had a reasonable expectation of success in so modifying the meat analog of Hsieh for the purpose of supplementing its iron content.

The Office has failed to provide a specific or credible explanation as to why a person of ordinary skill would have reasonably expected the leghemoglobin disclosed in Proulx to be bioavailable in the food matrix described by Hsieh (e.g., a meat analog). In particular, the Office has dismissed, or selectively ignored, Proulx's own admission that "the bioavailability of iron fortificants is often decreased due to the presence of inhibitors within the food matrix" and the consequent effect of such a statement on the understanding and motivation of a person of ordinary skill in the art (see page 1518, first paragraph of the Introduction).

Even more importantly, Applicants note that the *same* author, in a *later* publication, expressed doubt as to whether leghemoglobin would perform efficiently as a fortificant in other food matrices. For example, the Proulx Thesis states that there is "*no consensus* regarding best practices in fortification, especially in maize. This lack of consensus is based on the *lack of food matrix characterization and its effect on fortification*" (page 19) (emphasis added). According to the Proulx Thesis, "[i]ron has a complex absorption pathway confounded by extraneous factors in the diet" (page 5). The Proulx Thesis also states that, "[o]f all the nutrients used for maize fortification, none provides as much *challenge* for success as iron" (page 19) (emphasis added). Indeed, according to the Proulx Thesis:

> The challenge of iron fortification, as in many fortification interventions, is the optimization of the fortification scheme in terms of bioavailability, acceptability and cost. Iron compounds have a variety of issues in regards to all of the above criteria, and *particularly with respect to bioavailability in that it is highly variable based on the solubility of the iron itself, and is compounded by interactions with fiber, phytate and proteins in the food matrix, all of which inhibit the absorption of the iron*. On the other hand, food matrix interactions may enhance iron availability through chelating agents, protein binding, and pH effects.

Paragraph bridging pages 19-20 (citations omitted) (emphasis added).

Further, Uauy et al. (2002, J. Nutr. 132:849S-52S; hereafter "Uauy;" copy enclosed), which is a lengthy discussion of the technical and practical barriers to iron fortification, indicates that the "most absorbable iron compounds are most reactive with the food matrix [which] limits the amount of iron added to foods and determines in practice their potential biological impact"

(*see* the right column on page 849S). With respect to iron fortification of condiments and sauces, Uauy indicates that the use of "high bioavailability iron compounds is limited by the matrix" (top of right column on page 850S) and, with respect to iron fortification of cereals, Usuy indicates that there are "two major technical constraints when cereals are selected as vehicles: high levels of phytic acid and the extreme sensitivity of unsaturated fat to oxidation during storage in the presence of highly reactive forms of iron (ferrous sulfate or fumarate)" (right column on page 850S under the "Complementary foods" heading).

Thus, neither the cited references nor contemporaneous art related to iron supplementation provided a reasonable expectation of success to the skilled artisan that modifying the meat analog of Hsieh with the leghemoglobin of Proulx would have increased the bioavailability of iron in the final product. This is particularly true, when, based on Proulx's *own words*, the skilled artisan would have understood there to be a *lack of a consensus* in the art on iron fortification practices due to a lack of an understanding of any particular food matrix's effect on fortification.

B. The effect of a heme-containing protein on the organoleptic properties of a food product was unpredictable, if not expected to be likely negative.

A person having ordinary skill in the art would not have had a reasonable expectation of success that inclusion of leghemoglobin in any of the meat analogs or meat alternatives of the cited prior art would have resulted in a food product having acceptable organoleptic properties. A skilled artisan would have known that "iron is the most problematic mineral to add to foods" and that "[m]any of the compounds used as iron fortificants cause unacceptable color and flavor changes in the foods that are being fortified" (Richins et al., 2008, Cereal Chem., 85:561-5; second full paragraph; copy enclosed).

As discussed, above, the Office acknowledged that Hsieh is silent with respect to a heme-containing protein. In fact, Hsieh is silent with respect to *any* heme-containing protein. With respect to altering organoleptic properties, Hsieh simply discloses lists of flavoring agents that can be included in a meat analog (*see* paragraph [0090]), coloring agents that can be included in a meat analog (*see* paragraphs [0086] – [0087]), and vitamins and minerals as well as "additional ingredients" that can be included in a meat analog (see paragraphs [0059] – [0062] and [0092]). Notably, none of these lists includes iron in any form, let alone in a heme-containing protein.

The cited Proulx reference is silent regarding any predictable effect of leghemoglobin on the organoleptic properties of any given food matrix, particularly that of a meat analog of Hsieh or a consumable food product as claimed herein. The Proulx Thesis, however, discloses that "[i]ron compounds should be added to the level *up to which they do not change the organoleptic qualities* of the food, usually between 20 ppm and 40 ppm" (see page 29; emphasis added). In addition, the Proulx Thesis states that "[f]ortification [with] iron has *a potential negative effect on organoleptic quality* of maize products, in that soluble forms of iron can cause *oxidative rancidity*" (see page 20; emphasis added). Accordingly, given such statements, particularly when taken in context with the above Proulx statements regarding the lack of consensus on the effects of a food matrix on bioavailability of iron, a skilled artisan would not have been motivated to include leghemoglobin in a food product with any reasonable expectation of success that the organoleptic properties of the food product would not be adversely affected.

Indeed, a person having ordinary skill in the art would understand that heme iron has been associated in the art with oxidation and off-flavors in meat. Also as discussed above, Calkins et al. discloses that "[o]ff-flavor intensity [ ] was significantly related to pH and heme iron". Yancey et al. discloses that their results "suggest that livery flavor may be related to total iron content in the *gluteus medius*, and to myoglobin concentration in the *infraspinatus*, *psoas major*, and *gluteus medius* muscles." And Brewer discloses that "[h]eme iron facilitates lipid oxidation producing peroxides which are enzymatically decomposed by catalase producing a variety of compounds, some of which contribute off-flavors" ((2006, "The Chemistry of Beef Flavor – Executive Summary," National Cattlemen's Beef Association, #12814), *see* page 10).

Given the above art related to the negative organoleptic properties that are associated with heme-containing proteins, including oxidation, rancidity, and the production of off-flavors, a person of ordinary skill in the art would not have had a reasonable expectation of success that including a heme-containing protein in a meat analog or meat alternative would result in a food product having an acceptable organoleptic profile. In fact, a skilled artisan more likely would have been concerned that including a heme-containing protein would result in the production of undesired organoleptic properties.

Summary

As described in the present application, Applicants have discovered that the addition of a plant heme-iron-containing protein to a non-animal-based meat replica provides several unexpected advantages including, for example, imparting, after cooking, a beef-like flavor. Prior to the present application, a skilled artisan would have had no expectation that the addition of a heme-iron-containing protein to a non-animal-based meat replica would result in this beneficial characteristics. In fact, as discussed above, a person of ordinary skill, based on the prior art, would not only have had no motivation to add such a heme-iron containing protein to a meat replica, but also would have had no reasonable expectation of success in so doing, because he/she would have understood that such a heme-iron containing protein would 1) likely adversely impact the organoleptic properties of the meat replica; and 2) not predictably result in bioavailable iron in a meat replica matrix.

For these reasons at least, a *prima facie* case of obviousness has not been made. Accordingly, Applicants respectfully request that the rejection of the pending claims under 35 U.S.C. § 103 be withdrawn.

CONCLUSION

In light of the arguments made herein, Applicants submit that the pending claims are patentable and request early and favorable action thereon. If the Examiner feels it would further prosecution of the present case, he is invited to telephone the undersigned at (617) 956-5972.

Applicants do not concede any positions of the Office that are not expressly addressed above, nor do applicants concede that there are not other good reasons for patentability of the presented claims or other claims. Specifically, applicants do not concede that the cited references disclose the limitations of the independent or dependent claims.

The fees for extensions of time for three months are being paid with this reply on the Electronic Filing System. Apply those fees and any other necessary charges or credits to Deposit Account 06-1050, referencing the above attorney docket number.

Respectfully submitted,

Date: January 12, 2017

/Ian J.S. Lodovice, Reg. No. 59,749/
Ian J. Lodovice
Reg. No. 59,749

Customer Number 26191
Fish & Richardson P.C.
Telephone: (617) 956-5972
Facsimile: (877) 769-7945

61344888.doc

Electronic Patent Application Fee Transmittal

Application Number:	14796970
Filing Date:	10-Jul-2015
Title of Invention:	METHODS AND COMPOSITIONS FOR CONSUMABLES
First Named Inventor/Applicant Name:	Marija Vrljic
Filer:	Ian J.S. Lodovice/Judith Witzel
Attorney Docket Number:	38767-0010001

Filed as Large Entity

Filing Fees for Utility under 35 USC 111(a)

Description	Fee Code	Quantity	Amount	Sub-Total in USD($)
Basic Filing:				
Pages:				
Claims:				
Miscellaneous-Filing:				
Petition:				
Patent-Appeals-and-Interference:				
Post-Allowance-and-Post-Issuance:				
Extension-of-Time:				

Description	Fee Code	Quantity	Amount	Sub-Total in USD($)
Extension - 3 months with $0 paid	1253	1	1400	1400
Miscellaneous:				
		Total in USD ($)		**1400**

Electronic Acknowledgement Receipt

EFS ID:	28050089
Application Number:	14796970
International Application Number:	
Confirmation Number:	8501
Title of Invention:	METHODS AND COMPOSITIONS FOR CONSUMABLES
First Named Inventor/Applicant Name:	Marija Vrljic
Customer Number:	26191
Filer:	Ian J.S. Lodovice/Judith Witzel
Filer Authorized By:	Ian J.S. Lodovice
Attorney Docket Number:	38767-0010001
Receipt Date:	12-JAN-2017
Filing Date:	10-JUL-2015
Time Stamp:	16:32:29
Application Type:	Utility under 35 USC 111(a)

Payment information:

Submitted with Payment	yes
Payment Type	DA
Payment was successfully received in RAM	$1400
RAM confirmation Number	011317INTEFSW00003392061050
Deposit Account	
Authorized User	
The Director of the USPTO is hereby authorized to charge indicated fees and credit any overpayment as follows:	

File Listing:

Document Number	Document Description	File Name	File Size(Bytes)/ Message Digest	Multi Part /.zip	Pages (if appl.)
1		Response.pdf	199411 e97e3de8edc2b181a6a984b79b951f0a30853b44	yes	20
	Multipart Description/PDF files in .zip description				
	Document Description		**Start**	**End**	
	Amendment/Req. Reconsideration-After Non-Final Reject		1	1	
	Claims		2	7	
	Applicant Arguments/Remarks Made in an Amendment		8	20	
Warnings:					
Information:					
2	Fee Worksheet (SB06)	fee-info.pdf	31180 0a5e345aa4caff7dbbd9db5a7f04ab99d6beacaf	no	2
Warnings:					
Information:					
		Total Files Size (in bytes):	230591		

This Acknowledgement Receipt evidences receipt on the noted date by the USPTO of the indicated documents, characterized by the applicant, and including page counts, where applicable. It serves as evidence of receipt similar to a Post Card, as described in MPEP 503.

New Applications Under 35 U.S.C. 111
If a new application is being filed and the application includes the necessary components for a filing date (see 37 CFR 1.53(b)-(d) and MPEP 506), a Filing Receipt (37 CFR 1.54) will be issued in due course and the date shown on this Acknowledgement Receipt will establish the filing date of the application.

National Stage of an International Application under 35 U.S.C. 371
If a timely submission to enter the national stage of an international application is compliant with the conditions of 35 U.S.C. 371 and other applicable requirements a Form PCT/DO/EO/903 indicating acceptance of the application as a national stage submission under 35 U.S.C. 371 will be issued in addition to the Filing Receipt, in due course.

New International Application Filed with the USPTO as a Receiving Office
If a new international application is being filed and the international application includes the necessary components for an international filing date (see PCT Article 11 and MPEP 1810), a Notification of the International Application Number and of the International Filing Date (Form PCT/RO/105) will be issued in due course, subject to prescriptions concerning national security, and the date shown on this Acknowledgement Receipt will establish the international filing date of the application.

PTO/SB/06 (09-11)
Approved for use through 1/31/2014. OMB 0651-0032
U.S. Patent and Trademark Office; U.S. DEPARTMENT OF COMMERCE
Under the Paperwork Reduction Act of 1995, no persons are required to respond to a collection of information unless it displays a valid OMB control number.

PATENT APPLICATION FEE DETERMINATION RECORD Substitute for Form PTO-875	Application or Docket Number 14/796,970	Filing Date 07/10/2015	☐ To be Mailed

ENTITY: ☒ LARGE ☐ SMALL ☐ MICRO

APPLICATION AS FILED – PART I

FOR	(Column 1) NUMBER FILED	(Column 2) NUMBER EXTRA	RATE ($)	FEE ($)
☐ BASIC FEE (37 CFR 1.16(a), (b), or (c))	N/A	N/A	N/A	
☐ SEARCH FEE (37 CFR 1.16(k), (i), or (m))	N/A	N/A	N/A	
☐ EXAMINATION FEE (37 CFR 1.16(o), (p), or (q))	N/A	N/A	N/A	
TOTAL CLAIMS (37 CFR 1.16(i))	minus 20 =	*	X $ =	
INDEPENDENT CLAIMS (37 CFR 1.16(h))	minus 3 =	*	X $ =	
☐ APPLICATION SIZE FEE (37 CFR 1.16(s))	If the specification and drawings exceed 100 sheets of paper, the application size fee due is $310 ($155 for small entity) for each additional 50 sheets or fraction thereof. See 35 U.S.C. 41(a)(1)(G) and 37 CFR 1.16(s).			
☐ MULTIPLE DEPENDENT CLAIM PRESENT (37 CFR 1.16(j))				
* If the difference in column 1 is less than zero, enter "0" in column 2.			TOTAL	

APPLICATION AS AMENDED – PART II

AMENDMENT 01/12/2017	(Column 1) CLAIMS REMAINING AFTER AMENDMENT		(Column 2) HIGHEST NUMBER PREVIOUSLY PAID FOR	(Column 3) PRESENT EXTRA	RATE ($)	ADDITIONAL FEE ($)
Total (37 CFR 1.16(i))	* 33	Minus	** 30	= 3	X $80 =	240
Independent (37 CFR 1.16(h))	* 3	Minus	***4	= 0	X $420 =	0
☐ Application Size Fee (37 CFR 1.16(s))						
☐ FIRST PRESENTATION OF MULTIPLE DEPENDENT CLAIM (37 CFR 1.16(j))						
					TOTAL ADD'L FEE	**240**

AMENDMENT	(Column 1) CLAIMS REMAINING AFTER AMENDMENT		(Column 2) HIGHEST NUMBER PREVIOUSLY PAID FOR	(Column 3) PRESENT EXTRA	RATE ($)	ADDITIONAL FEE ($)
Total (37 CFR 1.16(i))	*	Minus	**	=	X $ =	
Independent (37 CFR 1.16(h))	*	Minus	***	=	X $ =	
☐ Application Size Fee (37 CFR 1.16(s))						
☐ FIRST PRESENTATION OF MULTIPLE DEPENDENT CLAIM (37 CFR 1.16(j))						
					TOTAL ADD'L FEE	

* If the entry in column 1 is less than the entry in column 2, write "0" in column 3.
** If the "Highest Number Previously Paid For" IN THIS SPACE is less than 20, enter "20".
*** If the "Highest Number Previously Paid For" IN THIS SPACE is less than 3, enter "3".
The "Highest Number Previously Paid For" (Total or Independent) is the highest number found in the appropriate box in column 1.

LIE
/POLIN ANG/

This collection of information is required by 37 CFR 1.16. The information is required to obtain or retain a benefit by the public which is to file (and by the USPTO to process) an application. Confidentiality is governed by 35 U.S.C. 122 and 37 CFR 1.14. This collection is estimated to take 12 minutes to complete, including gathering, preparing, and submitting the completed application form to the USPTO. Time will vary depending upon the individual case. Any comments on the amount of time you require to complete this form and/or suggestions for reducing this burden, should be sent to the Chief Information Officer, U.S. Patent and Trademark Office, U.S. Department of Commerce, P.O. Box 1450, Alexandria, VA 22313-1450. DO NOT SEND FEES OR COMPLETED FORMS TO THIS ADDRESS. **SEND TO: Commissioner for Patents, P.O. Box 1450, Alexandria, VA 22313-1450.**
If you need assistance in completing the form, call 1-800-PTO-9199 and select option 2.

Document code: WFEE

United States Patent and Trademark Office
Sales Receipt for Accounting Date: 02/08/2017

PANG11 SALE #00000002 Mailroom Dt: 01/12/2017 061050 14796970
01 FC : 1202 240.00 DA

Attorney Docket No.: 38767-0010001 / M2CON-Track 1

IN THE UNITED STATES PATENT AND TRADEMARK OFFICE

First Named Inventor	:	Marija Vrljic	Art Unit	:	1791
Serial No.	:	14/796,970	Examiner	:	Elizabeth A. Gwartney
Filed	:	July 10, 2015			
			Conf. No.	:	8501
Title	:	METHODS AND COMPOSITIONS FOR CONSUMABLES			

MAIL STOP AMENDMENT
Commissioner for Patents
P.O. Box 1450
Alexandria, VA 22313-1450

INFORMATION DISCLOSURE STATEMENT

Please consider the reference listed on the enclosed PTO-1449 Form. Non-patent literature is enclosed.

This statement is being filed after a first Office Action on the merits, but before receipt of a Final Office Action or a Notice of Allowance. A submission fee in the amount of $180 as required under 37 CFR § 1.17(p) is being paid with this statement. Please apply any other charges, or credits, to Deposit Account No. 06-1050, referencing the above-indicated Attorney Docket Number.

Please contact the undersigned if there are any questions regarding this statement.

Respectfully submitted,

Date: /January 19, 2017/

/M. Angela Parsons/
M. Angela Parsons, Ph.D.
Reg. No. 44,282

Customer Number 26191
Fish & Richardson P.C.
Telephone: (612) 335-5070
Facsimile: (877) 769-7945

61425973.doc

Sheet 1 of 1

Substitute Disclosure Form	U.S. Department of Commerce Patent and Trademark Office	Attorney Docket No. 38767-0010001	Application No. 14/796,970
Information Disclosure Statement by Applicant (Use several sheets if necessary)		Applicant Impossible Foods Inc.	
(37 CFR §1.98(b))		Filing Date July 10, 2015	Group Art Unit 1791

U.S. Patent Documents

Examiner Initial	Desig. ID	Document Number	Publication Date	Patentee	Class	Subclass	Filing Date If Appropriate

Foreign Patent Documents or Published Foreign Patent Applications

Examiner Initial	Desig. ID	Document Number	Publication Date	Country or Patent Office	Class	Subclass	Translation Yes	Translation No

Other Documents (include Author, Title, Date, and Place of Publication)

Examiner Initial	Desig. ID	Document
	1.	Cott et al., "The 'Impossible' Veggie Burger: A Tech Industry Answer to the Big Mac," Business Day, January 13, 2017, retrieved on 01/17/2017, <https://mobile.nytimes.com/2017/01/13/business/veggie-burger-impossible-burger.html?referer=http://www.drudgereport.com/>, 7 pages

Examiner Signature	Date Considered
EXAMINER: Initials citation considered. Draw line through citation if not in conformance and not considered. Include copy of this form with next communication to applicant.	

Substitute Disclosure Form

Electronic Patent Application Fee Transmittal

Application Number:	14796970
Filing Date:	10-Jul-2015
Title of Invention:	METHODS AND COMPOSITIONS FOR CONSUMABLES
First Named Inventor/Applicant Name:	Marija Vrljic
Filer:	M. Angela Parsons/Shannon Glaeser
Attorney Docket Number:	38767-0010001

Filed as Large Entity

Filing Fees for Utility under 35 USC 111(a)

Description	Fee Code	Quantity	Amount	Sub-Total in USD($)
Basic Filing:				
Pages:				
Claims:				
Miscellaneous-Filing:				
Petition:				
Patent-Appeals-and-Interference:				
Post-Allowance-and-Post-Issuance:				
Extension-of-Time:				

Description	Fee Code	Quantity	Amount	Sub-Total in USD($)
Miscellaneous:				
Submission- Information Disclosure Stmt	1806	1	180	180
		Total in USD ($)		**180**

Electronic Acknowledgement Receipt

EFS ID:	28104959
Application Number:	14796970
International Application Number:	
Confirmation Number:	8501
Title of Invention:	METHODS AND COMPOSITIONS FOR CONSUMABLES
First Named Inventor/Applicant Name:	Marija Vrljic
Customer Number:	26191
Filer:	M. Angela Parsons/Shannon Glaeser
Filer Authorized By:	M. Angela Parsons
Attorney Docket Number:	38767-0010001
Receipt Date:	19-JAN-2017
Filing Date:	10-JUL-2015
Time Stamp:	11:56:02
Application Type:	Utility under 35 USC 111(a)

Payment information:

Submitted with Payment	yes
Payment Type	DA
Payment was successfully received in RAM	$180
RAM confirmation Number	011917INTEFSW00011244061050
Deposit Account	
Authorized User	
The Director of the USPTO is hereby authorized to charge indicated fees and credit any overpayment as follows:	

File Listing:

Document Number	Document Description	File Name	File Size(Bytes)/ Message Digest	Multi Part /.zip	Pages (if appl.)
1	Information Disclosure Statement (IDS) Form (SB08)	Transmittal.pdf	70292 311107de05c4aea2d3f8dc7eaaa85aea234a05af	no	1
Warnings:					
Information:					
This is not an USPTO supplied IDS fillable form					
2	Information Disclosure Statement (IDS) Form (SB08)	1449.pdf	121889 ccbebcd5f9cd33d876ba8ca4a53244bf01e74cfc	no	1
Warnings:					
Information:					
This is not an USPTO supplied IDS fillable form					
3	Non Patent Literature	Cott_2017.pdf	1529112 0b1c2aeb0d196de1168e72e6075717b5995245db	no	7
Warnings:					
Information:					
4	Fee Worksheet (SB06)	fee-info.pdf	30810 e36bd82e9402f3b0f8edc5b108bb5d1148471b1d	no	2
Warnings:					
Information:					
		Total Files Size (in bytes):	1752103		

This Acknowledgement Receipt evidences receipt on the noted date by the USPTO of the indicated documents, characterized by the applicant, and including page counts, where applicable. It serves as evidence of receipt similar to a Post Card, as described in MPEP 503.

New Applications Under 35 U.S.C. 111
If a new application is being filed and the application includes the necessary components for a filing date (see 37 CFR 1.53(b)-(d) and MPEP 506), a Filing Receipt (37 CFR 1.54) will be issued in due course and the date shown on this Acknowledgement Receipt will establish the filing date of the application.

National Stage of an International Application under 35 U.S.C. 371
If a timely submission to enter the national stage of an international application is compliant with the conditions of 35 U.S.C. 371 and other applicable requirements a Form PCT/DO/EO/903 indicating acceptance of the application as a national stage submission under 35 U.S.C. 371 will be issued in addition to the Filing Receipt, in due course.

New International Application Filed with the USPTO as a Receiving Office
If a new international application is being filed and the international application includes the necessary components for an international filing date (see PCT Article 11 and MPEP 1810), a Notification of the International Application Number and of the International Filing Date (Form PCT/RO/105) will be issued in due course, subject to prescriptions concerning national security, and the date shown on this Acknowledgement Receipt will establish the international filing date of the application.

Attorney Docket No.: 38767-0010001 / M2CON-Track 1

IN THE UNITED STATES PATENT AND TRADEMARK OFFICE

First Named Inventor	:	Marija Vrljic	Art Unit	:	1791
Serial No.	:	14/796,970	Examiner	:	Elizabeth A. Gwartney
Filed	:	July 10, 2015			
			Conf. No.	:	8501
Title	:	METHODS AND COMPOSITIONS FOR CONSUMABLES			

MAIL STOP AMENDMENT
Commissioner for Patents
P.O. Box 1450
Alexandria, VA 22313-1450

INFORMATION DISCLOSURE STATEMENT

Please consider the references listed on the enclosed PTO-1449 Form. A non-patent literature reference is enclosed.

This statement is being filed after a first Office Action on the merits, but before receipt of a Final Office Action or a Notice of Allowance. A submission fee in the amount of $180 as required under 37 CFR § 1.17(p) is being paid with this statement. Please apply any other charges, or credits, to Deposit Account No. 06-1050, referencing the above-indicated Attorney Docket Number.

Please contact the undersigned if there are any questions regarding this statement.

Respectfully submitted,

Date: /February 7, 2017/

/M. Angela Parsons/
M. Angela Parsons, Ph.D.
Reg. No. 44,282

Customer Number 26191
Fish & Richardson P.C.
Telephone: (612) 335-5070
Facsimile: (877) 769-7945

61434576.doc

Sheet _1_ of _1_

Substitute Disclosure Form U.S. Department of Commerce Patent and Trademark Office	Attorney Docket No. 38767-0010001	Application No. 14/796,970
Information Disclosure Statement by Applicant (Use several sheets if necessary)	Applicant Impossible Foods Inc.	
(37 CFR §1.98(b))	Filing Date July 10, 2015	Group Art Unit 1791

U.S. Patent Documents

Examiner Initial	Desig. ID	Document Number	Publication Date	Patentee	Class	Subclass	Filing Date If Appropriate
	--	--	--				

Foreign Patent Documents or Published Foreign Patent Applications

Examiner Initial	Desig. ID	Document Number	Publication Date	Country or Patent Office	Class	Subclass	Translation Yes	Translation No
	--	--	--					

Other Documents (include Author, Title, Date, and Place of Publication)

Examiner Initial	Desig. ID	Document
	1.	Lombardi et al., "Total Heme and Non-heme Iron in Raw and Cooked Meats," Journal of Food Science, 67(5):1738-1741 (2002)

Examiner Signature	Date Considered
EXAMINER: Initials citation considered. Draw line through citation if not in conformance and not considered. Include copy of this form with next communication to applicant.	

Substitute Disclosure Form

Electronic Patent Application Fee Transmittal

Application Number:	14796970
Filing Date:	10-Jul-2015
Title of Invention:	METHODS AND COMPOSITIONS FOR CONSUMABLES
First Named Inventor/Applicant Name:	Marija Vrljic
Filer:	M. Angela Parsons/Shannon Glaeser
Attorney Docket Number:	38767-0010001

Filed as Large Entity

Filing Fees for Utility under 35 USC 111(a)

Description	Fee Code	Quantity	Amount	Sub-Total in USD($)
Basic Filing:				
Pages:				
Claims:				
Miscellaneous-Filing:				
Petition:				
Patent-Appeals-and-Interference:				
Post-Allowance-and-Post-Issuance:				
Extension-of-Time:				

Description	Fee Code	Quantity	Amount	Sub-Total in USD($)
Miscellaneous:				
Submission- Information Disclosure Stmt	1806	1	180	180
		Total in USD ($)		**180**

Electronic Acknowledgement Receipt

EFS ID:	28282155
Application Number:	14796970
International Application Number:	
Confirmation Number:	8501
Title of Invention:	METHODS AND COMPOSITIONS FOR CONSUMABLES
First Named Inventor/Applicant Name:	Marija Vrljic
Customer Number:	26191
Filer:	M. Angela Parsons/Shannon Glaeser
Filer Authorized By:	M. Angela Parsons
Attorney Docket Number:	38767-0010001
Receipt Date:	07-FEB-2017
Filing Date:	10-JUL-2015
Time Stamp:	10:02:11
Application Type:	Utility under 35 USC 111(a)

Payment information:

Submitted with Payment	yes
Payment Type	DA
Payment was successfully received in RAM	$180
RAM confirmation Number	020717INTEFSW00009283061050
Deposit Account	
Authorized User	
The Director of the USPTO is hereby authorized to charge indicated fees and credit any overpayment as follows:	

File Listing:

Document Number	Document Description	File Name	File Size(Bytes)/ Message Digest	Multi Part /.zip	Pages (if appl.)
1	Information Disclosure Statement (IDS) Form (SB08)	Transmittal.pdf	70282 e5c6acb4a1c8dad10c51047fd8cef145e97c9763	no	1
Warnings:					
Information:					
This is not an USPTO supplied IDS fillable form					
2	Information Disclosure Statement (IDS) Form (SB08)	1449.pdf	120272 a3a1e8bfacb1e39350bdbc16024c103f858aa1b9	no	1
Warnings:					
Information:					
This is not an USPTO supplied IDS fillable form					
3	Non Patent Literature	Lombardi_2002.pdf	379677 34d54e0dc988193a4deb437a7cc9b4aa9992d49c	no	4
Warnings:					
Information:					
4	Fee Worksheet (SB06)	fee-info.pdf	30810 9496e378349e9398bff4531090927fe3d1975fac	no	2
Warnings:					
Information:					
		Total Files Size (in bytes):	601041		

This Acknowledgement Receipt evidences receipt on the noted date by the USPTO of the indicated documents, characterized by the applicant, and including page counts, where applicable. It serves as evidence of receipt similar to a Post Card, as described in MPEP 503.

New Applications Under 35 U.S.C. 111
If a new application is being filed and the application includes the necessary components for a filing date (see 37 CFR 1.53(b)-(d) and MPEP 506), a Filing Receipt (37 CFR 1.54) will be issued in due course and the date shown on this Acknowledgement Receipt will establish the filing date of the application.

National Stage of an International Application under 35 U.S.C. 371
If a timely submission to enter the national stage of an international application is compliant with the conditions of 35 U.S.C. 371 and other applicable requirements a Form PCT/DO/EO/903 indicating acceptance of the application as a national stage submission under 35 U.S.C. 371 will be issued in addition to the Filing Receipt, in due course.

New International Application Filed with the USPTO as a Receiving Office
If a new international application is being filed and the international application includes the necessary components for an international filing date (see PCT Article 11 and MPEP 1810), a Notification of the International Application Number and of the International Filing Date (Form PCT/RO/105) will be issued in due course, subject to prescriptions concerning national security, and the date shown on this Acknowledgement Receipt will establish the international filing date of the application.

Attorney Docket No.: 38767-0010001 / M2CON-Track 1

IN THE UNITED STATES PATENT AND TRADEMARK OFFICE

First Named Inventor	:	Marija Vrljic	Art Unit	:	1791
Serial No.	:	14/796,970	Examiner	:	Elizabeth A. Gwartney
Filed	:	July 10, 2015			
			Conf. No.	:	8501
Title	:	METHODS AND COMPOSITIONS FOR CONSUMABLES			

MAIL STOP AMENDMENT
Commissioner for Patents
P.O. Box 1450
Alexandria, VA 22313-1450

INFORMATION DISCLOSURE STATEMENT

Please consider the reference listed on the enclosed PTO-1449 Form. A non-patent literature reference is enclosed.

This statement is being filed after a first Office Action on the merits, but before receipt of a Final Office Action or a Notice of Allowance. A submission fee in the amount of $180 as required under 37 CFR § 1.17(p) is being paid with this statement. Please apply any charges, or credits, to Deposit Account No. 06-1050, referencing the above-indicated Attorney Docket Number.

Please contact the undersigned if there are any questions regarding this statement.

Respectfully submitted,

Date: /February 15, 2017/

/M. Angela Parsons/
M. Angela Parsons, Ph.D.
Reg. No. 44,282

Customer Number 26191
Fish & Richardson P.C.
Telephone: (612) 335-5070
Facsimile: (877) 769-7945

61439323.doc

Sheet 1 of 1

Substitute Disclosure Form	U.S. Department of Commerce Patent and Trademark Office	Attorney Docket No. 38767-0010001	Application No. 14/796,970
Information Disclosure Statement by Applicant (Use several sheets if necessary)		Applicant Impossible Foods Inc.	
(37 CFR §1.98(b))		Filing Date July 10, 2015	Group Art Unit 1791

U.S. Patent Documents

Examiner Initial	Desig. ID	Document Number	Publication Date	Patentee	Class	Subclass	Filing Date If Appropriate

Foreign Patent Documents or Published Foreign Patent Applications

Examiner Initial	Desig. ID	Document Number	Publication Date	Country or Patent Office	Class	Subclass	Translation Yes	Translation No

Other Documents (include Author, Title, Date, and Place of Publication)

Examiner Initial	Desig. ID	Document
	1.	Aubrey, "Food For Thought: Saving The Planet, One Burger At A Time: This Juicy Patty Is Meat-Free," The Salt, February 11, 2017, retrieved on February 14, 2017, retrieved from <http://www.npr.org/sections/thesalt/2017/02/11/514544431/saving-the-planet-one-burger-at-a-time-this-juicy-patty-is-meat-free>, 14 pages

Examiner Signature	Date Considered
EXAMINER: Initials citation considered. Draw line through citation if not in conformance and not considered. Include copy of this form with next communication to applicant.	

Substitute Disclosure Form

Electronic Patent Application Fee Transmittal

Application Number:	14796970
Filing Date:	10-Jul-2015
Title of Invention:	METHODS AND COMPOSITIONS FOR CONSUMABLES
First Named Inventor/Applicant Name:	Marija Vrljic
Filer:	M. Angela Parsons/Shannon Glaeser
Attorney Docket Number:	38767-0010001

Filed as Large Entity

Filing Fees for Utility under 35 USC 111(a)

Description	Fee Code	Quantity	Amount	Sub-Total in USD($)
Basic Filing:				
Pages:				
Claims:				
Miscellaneous-Filing:				
Petition:				
Patent-Appeals-and-Interference:				
Post-Allowance-and-Post-Issuance:				
Extension-of-Time:				

Description	Fee Code	Quantity	Amount	Sub-Total in USD($)
Miscellaneous:				
Submission- Information Disclosure Stmt	1806	1	180	180
		Total in USD ($)		**180**

Electronic Acknowledgement Receipt

EFS ID:	28359722
Application Number:	14796970
International Application Number:	
Confirmation Number:	8501
Title of Invention:	METHODS AND COMPOSITIONS FOR CONSUMABLES
First Named Inventor/Applicant Name:	Marija Vrljic
Customer Number:	26191
Filer:	M. Angela Parsons/Shannon Glaeser
Filer Authorized By:	M. Angela Parsons
Attorney Docket Number:	38767-0010001
Receipt Date:	15-FEB-2017
Filing Date:	10-JUL-2015
Time Stamp:	10:50:35
Application Type:	Utility under 35 USC 111(a)

Payment information:

Submitted with Payment	yes
Payment Type	DA
Payment was successfully received in RAM	$180
RAM confirmation Number	021517INTEFSW00008137061050
Deposit Account	
Authorized User	
The Director of the USPTO is hereby authorized to charge indicated fees and credit any overpayment as follows:	

File Listing:

Document Number	Document Description	File Name	File Size(Bytes)/ Message Digest	Multi Part /.zip	Pages (if appl.)
1	Information Disclosure Statement (IDS) Form (SB08)	Transmittal.pdf	70293 456aec05fd8f0c1f53892d30fbe07d4cdf9e5929	no	1
Warnings:					
Information:					
This is not an USPTO supplied IDS fillable form					
2	Information Disclosure Statement (IDS) Form (SB08)	1449.pdf	121298 d96a9defcc04a29855c22d51216c3e81219b8920	no	1
Warnings:					
Information:					
This is not an USPTO supplied IDS fillable form					
3	Non Patent Literature	Aubrey_2017.pdf	2445147 deb5daf624d276cf4d4048a1c2780a0ee5585e63	no	14
Warnings:					
Information:					
4	Fee Worksheet (SB06)	fee-info.pdf	30809 e60139bfb6a341bda7d641bdd54396e4cae5c5a9	no	2
Warnings:					
Information:					
		Total Files Size (in bytes):	2667547		

This Acknowledgement Receipt evidences receipt on the noted date by the USPTO of the indicated documents, characterized by the applicant, and including page counts, where applicable. It serves as evidence of receipt similar to a Post Card, as described in MPEP 503.

New Applications Under 35 U.S.C. 111
If a new application is being filed and the application includes the necessary components for a filing date (see 37 CFR 1.53(b)-(d) and MPEP 506), a Filing Receipt (37 CFR 1.54) will be issued in due course and the date shown on this Acknowledgement Receipt will establish the filing date of the application.

National Stage of an International Application under 35 U.S.C. 371
If a timely submission to enter the national stage of an international application is compliant with the conditions of 35 U.S.C. 371 and other applicable requirements a Form PCT/DO/EO/903 indicating acceptance of the application as a national stage submission under 35 U.S.C. 371 will be issued in addition to the Filing Receipt, in due course.

New International Application Filed with the USPTO as a Receiving Office
If a new international application is being filed and the international application includes the necessary components for an international filing date (see PCT Article 11 and MPEP 1810), a Notification of the International Application Number and of the International Filing Date (Form PCT/RO/105) will be issued in due course, subject to prescriptions concerning national security, and the date shown on this Acknowledgement Receipt will establish the international filing date of the application.

Attorney Docket No.: 38767-0010001 / M2CON-Track 1

IN THE UNITED STATES PATENT AND TRADEMARK OFFICE

First Named Inventor	:	Marija Vrljic	Art Unit	:	1791
Serial No.	:	14/796,970	Examiner	:	Elizabeth A. Gwartney
Filed	:	July 10, 2015			
			Conf. No.	:	8501
Title	:	METHODS AND COMPOSITIONS FOR CONSUMABLES			

MAIL STOP AMENDMENT
Commissioner for Patents
P.O. Box 1450
Alexandria, VA 22313-1450

INFORMATION DISCLOSURE STATEMENT

Please consider the reference listed on the enclosed PTO-1449 Form. A non-patent literature reference is enclosed.

This statement is being filed after a first Office Action on the merits, but before receipt of a Final Office Action or a Notice of Allowance. A submission fee in the amount of $180 as required under 37 CFR § 1.17(p) is being paid with this statement. Please apply any charges, or credits, to Deposit Account No. 06-1050, referencing the above-indicated Attorney Docket Number.

Please contact the undersigned if there are any questions regarding this statement.

Respectfully submitted,

Date: /March 3, 2017/

/M. Angela Parsons/
M. Angela Parsons, Ph.D.
Reg. No. 44,282

Customer Number 26191
Fish & Richardson P.C.
Telephone: (612) 335-5070
Facsimile: (877) 769-7945

61445078.doc

Sheet 1 of 1

Substitute Disclosure Form	U.S. Department of Commerce Patent and Trademark Office	Attorney Docket No. 38767-0010001	Application No. 14/796,970
Information Disclosure Statement by Applicant (Use several sheets if necessary)		Applicant Impossible Foods Inc.	
(37 CFR §1.98(b))		Filing Date July 10, 2015	Group Art Unit 1791

U.S. Patent Documents

Examiner Initial	Desig. ID	Document Number	Publication Date	Patentee	Class	Subclass	Filing Date If Appropriate

Foreign Patent Documents or Published Foreign Patent Applications

Examiner Initial	Desig. ID	Document Number	Publication Date	Country or Patent Office	Class	Subclass	Translation Yes	Translation No

Other Documents (include Author, Title, Date, and Place of Publication)

Examiner Initial	Desig. ID	Document
	1.	Chau, "Uncanny Patty," The Ringer, February 27, 2017, retrieved on February 28, 2017, retrieved from <https://theringer.com/impossible-burger-last-meal-on-earth-week-food-f9f14acdb99d#.vocb2hi6e>, 19 pages

Examiner Signature	Date Considered
EXAMINER: Initials citation considered. Draw line through citation if not in conformance and not considered. Include copy of this form with next communication to applicant.	

Substitute Disclosure Form

Electronic Patent Application Fee Transmittal

Application Number:	14796970
Filing Date:	10-Jul-2015
Title of Invention:	METHODS AND COMPOSITIONS FOR CONSUMABLES
First Named Inventor/Applicant Name:	Marija Vrljic
Filer:	M. Angela Parsons/Adam Schunk
Attorney Docket Number:	38767-0010001

Filed as Large Entity

Filing Fees for Utility under 35 USC 111(a)

Description	Fee Code	Quantity	Amount	Sub-Total in USD($)
Basic Filing:				
Pages:				
Claims:				
Miscellaneous-Filing:				
Petition:				
Patent-Appeals-and-Interference:				
Post-Allowance-and-Post-Issuance:				
Extension-of-Time:				

Description	Fee Code	Quantity	Amount	Sub-Total in USD($)
Miscellaneous:				
Submission- Information Disclosure Stmt	1806	1	180	180
		Total in USD ($)		**180**

Electronic Acknowledgement Receipt

EFS ID:	28523601
Application Number:	14796970
International Application Number:	
Confirmation Number:	8501
Title of Invention:	METHODS AND COMPOSITIONS FOR CONSUMABLES
First Named Inventor/Applicant Name:	Marija Vrljic
Customer Number:	26191
Filer:	M. Angela Parsons/Adam Schunk
Filer Authorized By:	M. Angela Parsons
Attorney Docket Number:	38767-0010001
Receipt Date:	03-MAR-2017
Filing Date:	10-JUL-2015
Time Stamp:	09:46:35
Application Type:	Utility under 35 USC 111(a)

Payment information:

Submitted with Payment	yes
Payment Type	DA
Payment was successfully received in RAM	$180
RAM confirmation Number	030317INTEFSW00008398061050
Deposit Account	
Authorized User	
The Director of the USPTO is hereby authorized to charge indicated fees and credit any overpayment as follows:	

File Listing:

Document Number	Document Description	File Name	File Size(Bytes)/ Message Digest	Multi Part /.zip	Pages (if appl.)
1	Information Disclosure Statement (IDS) Form (SB08)	IDS_Transmittal.pdf	54664 aba128d76a207eda36bcb61ceef189a65514ef45	no	1
Warnings:					
Information:					
This is not an USPTO supplied IDS fillable form					
2	Information Disclosure Statement (IDS) Form (SB08)	IDS-1449.pdf	89311 29d8f3bbf0d1e04592b1aa55ea4c723ee5fc738f	no	1
Warnings:					
Information:					
This is not an USPTO supplied IDS fillable form					
3	Non Patent Literature	Chau_UnCanny_Patty_2017.pdf	4480589 7c86f34b9ee0a712a025ede571552518136cf873	no	19
Warnings:					
Information:					
4	Fee Worksheet (SB06)	fee-info.pdf	30767 8337f809894e26fdaa1b06e315ec696acb5980cd	no	2
Warnings:					
Information:					
		Total Files Size (in bytes):	4655331		

This Acknowledgement Receipt evidences receipt on the noted date by the USPTO of the indicated documents, characterized by the applicant, and including page counts, where applicable. It serves as evidence of receipt similar to a Post Card, as described in MPEP 503.

New Applications Under 35 U.S.C. 111
If a new application is being filed and the application includes the necessary components for a filing date (see 37 CFR 1.53(b)-(d) and MPEP 506), a Filing Receipt (37 CFR 1.54) will be issued in due course and the date shown on this Acknowledgement Receipt will establish the filing date of the application.

National Stage of an International Application under 35 U.S.C. 371
If a timely submission to enter the national stage of an international application is compliant with the conditions of 35 U.S.C. 371 and other applicable requirements a Form PCT/DO/EO/903 indicating acceptance of the application as a national stage submission under 35 U.S.C. 371 will be issued in addition to the Filing Receipt, in due course.

New International Application Filed with the USPTO as a Receiving Office
If a new international application is being filed and the international application includes the necessary components for an international filing date (see PCT Article 11 and MPEP 1810), a Notification of the International Application Number and of the International Filing Date (Form PCT/RO/105) will be issued in due course, subject to prescriptions concerning national security, and the date shown on this Acknowledgement Receipt will establish the international filing date of the application.

Attorney Docket No.: 38767-0010001 / M2CON-Track 1

IN THE UNITED STATES PATENT AND TRADEMARK OFFICE

First Named Inventor	:	Marija Vrljic	Art Unit	:	1791
Serial No.	:	14/796,970	Examiner	:	Elizabeth A. Gwartney
Filed	:	July 10, 2015			
			Conf. No.	:	8501
Title	:	METHODS AND COMPOSITIONS FOR CONSUMABLES			

MAIL STOP AMENDMENT
Commissioner for Patents
P.O. Box 1450
Alexandria, VA 22313-1450

INFORMATION DISCLOSURE STATEMENT

Please consider the references listed on the enclosed PTO-1449 Form. Non-patent literature references are enclosed.

This statement is being filed after a first Office Action on the merits, but before receipt of a Final Office Action or a Notice of Allowance. A submission fee in the amount of $180 as required under 37 CFR § 1.17(p) is being paid with this statement. Please apply any other charges, or credits, to Deposit Account No. 06-1050, referencing the above-indicated Attorney Docket Number.

Please contact the undersigned if there are any questions regarding this statement.

Respectfully submitted,

Date: /March 20, 2017/

/M. Angela Parsons/
M. Angela Parsons, Ph.D.
Reg. No. 44,282

Customer Number 26191
Fish & Richardson P.C.
Telephone: (612) 335-5070
Facsimile: (877) 769-7945

61452740.doc

Sheet 1 of 1

Substitute Disclosure Form	U.S. Department of Commerce Patent and Trademark Office	Attorney Docket No. 38767-0010001	Application No. 14/796,970
Information Disclosure Statement by Applicant (Use several sheets if necessary)		Applicant Impossible Foods Inc.	
(37 CFR §1.98(b))		Filing Date July 10, 2015	Group Art Unit 1791

U.S. Patent Documents							
Examiner Initial	Desig. ID	Document Number	Publication Date	Patentee	Class	Subclass	Filing Date If Appropriate

Foreign Patent Documents or Published Foreign Patent Applications								
Examiner Initial	Desig. ID	Document Number	Publication Date	Country or Patent Office	Class	Subclass	Translation	
							Yes	No

Other Documents (include Author, Title, Date, and Place of Publication)		
Examiner Initial	Desig. ID	Document
	1.	Fang et al., "Food Nutrition health theory and technology," China light industry press, p. 448, January 31, 1997 (English Translation)
	2.	Zhengnong et al., "Cihai biological fascicle," Shanghai Lexicographical Publishing House, P.243, December 31, 1987 (English Translation)

Examiner Signature	Date Considered
EXAMINER: Initials citation considered. Draw line through citation if not in conformance and not considered. Include copy of this form with next communication to applicant.	

Substitute Disclosure Form

Electronic Patent Application Fee Transmittal

Application Number:	14796970
Filing Date:	10-Jul-2015
Title of Invention:	METHODS AND COMPOSITIONS FOR CONSUMABLES
First Named Inventor/Applicant Name:	Marija Vrljic
Filer:	M. Angela Parsons/Shannon Glaeser
Attorney Docket Number:	38767-0010001

Filed as Large Entity

Filing Fees for Utility under 35 USC 111(a)

Description	Fee Code	Quantity	Amount	Sub-Total in USD($)
Basic Filing:				
Pages:				
Claims:				
Miscellaneous-Filing:				
Petition:				
Patent-Appeals-and-Interference:				
Post-Allowance-and-Post-Issuance:				
Extension-of-Time:				

Description	Fee Code	Quantity	Amount	Sub-Total in USD($)
Miscellaneous:				
Submission- Information Disclosure Stmt	1806	1	180	180
		Total in USD ($)		**180**

Electronic Acknowledgement Receipt

EFS ID:	28673090
Application Number:	14796970
International Application Number:	
Confirmation Number:	8501
Title of Invention:	METHODS AND COMPOSITIONS FOR CONSUMABLES
First Named Inventor/Applicant Name:	Marija Vrljic
Customer Number:	26191
Filer:	M. Angela Parsons/Shannon Glaeser
Filer Authorized By:	M. Angela Parsons
Attorney Docket Number:	38767-0010001
Receipt Date:	20-MAR-2017
Filing Date:	10-JUL-2015
Time Stamp:	11:10:54
Application Type:	Utility under 35 USC 111(a)

Payment information:

Submitted with Payment	yes
Payment Type	DA
Payment was successfully received in RAM	$180
RAM confirmation Number	032017INTEFSW00010359061050
Deposit Account	
Authorized User	
The Director of the USPTO is hereby authorized to charge indicated fees and credit any overpayment as follows:	

File Listing:

Document Number	Document Description	File Name	File Size(Bytes)/ Message Digest	Multi Part /.zip	Pages (if appl.)
1	Information Disclosure Statement (IDS) Form (SB08)	Transmittal.pdf	70273 1217a0bb78b88ea9329ed35cb9d1c260b73070f4	no	1
Warnings:					
Information:					
This is not an USPTO supplied IDS fillable form					
2	Information Disclosure Statement (IDS) Form (SB08)	1449.pdf	120472 a6efbd33a5601545c94209796f472d0e0f3634d9	no	1
Warnings:					
Information:					
This is not an USPTO supplied IDS fillable form					
3	Non Patent Literature	Fang_1997_transl.pdf	2255629 ab1d1d4b888473da91b59370e6f63f5801b68883	no	7
Warnings:					
Information:					
4	Non Patent Literature	Zhengnong_1987_transl.pdf	6204157 8b4ed646ebd51c58f3303cbdb3cef23d65adc075	no	8
Warnings:					
Information:					
5	Fee Worksheet (SB06)	fee-info.pdf	30810 f463163ad90719dccc4bbe5908b5ef66d11bbd25	no	2
Warnings:					
Information:					
		Total Files Size (in bytes):	8681341		

This Acknowledgement Receipt evidences receipt on the noted date by the USPTO of the indicated documents, characterized by the applicant, and including page counts, where applicable. It serves as evidence of receipt similar to a Post Card, as described in MPEP 503.

New Applications Under 35 U.S.C. 111
If a new application is being filed and the application includes the necessary components for a filing date (see 37 CFR 1.53(b)-(d) and MPEP 506), a Filing Receipt (37 CFR 1.54) will be issued in due course and the date shown on this Acknowledgement Receipt will establish the filing date of the application.

National Stage of an International Application under 35 U.S.C. 371
If a timely submission to enter the national stage of an international application is compliant with the conditions of 35 U.S.C. 371 and other applicable requirements a Form PCT/DO/EO/903 indicating acceptance of the application as a national stage submission under 35 U.S.C. 371 will be issued in addition to the Filing Receipt, in due course.

New International Application Filed with the USPTO as a Receiving Office
If a new international application is being filed and the international application includes the necessary components for an international filing date (see PCT Article 11 and MPEP 1810), a Notification of the International Application Number and of the International Filing Date (Form PCT/RO/105) will be issued in due course, subject to prescriptions concerning national security, and the date shown on this Acknowledgement Receipt will establish the international filing date of the application.

UNITED STATES PATENT AND TRADEMARK OFFICE

UNITED STATES DEPARTMENT OF COMMERCE
United States Patent and Trademark Office
Address: COMMISSIONER FOR PATENTS
P.O. Box 1450
Alexandria, Virginia 22313-1450
www.uspto.gov

APPLICATION NO.	FILING DATE	FIRST NAMED INVENTOR	ATTORNEY DOCKET NO.	CONFIRMATION NO.
14/796,970	07/10/2015	Marija Vrljic	38767-0010001	8501

26191 7590 04/17/2017
FISH & RICHARDSON P.C. (TC)
PO BOX 1022
MINNEAPOLIS, MN 55440-1022

EXAMINER
GWARTNEY, ELIZABETH A

ART UNIT	PAPER NUMBER
1791	

NOTIFICATION DATE	DELIVERY MODE
04/17/2017	ELECTRONIC

Please find below and/or attached an Office communication concerning this application or proceeding.

The time period for reply, if any, is set in the attached communication.

Notice of the Office communication was sent electronically on above-indicated "Notification Date" to the following e-mail address(es):

PATDOCTC@fr.com

Office Action Summary	Application No. 14/796,970	Applicant(s) VRLJIC ET AL.	
	Examiner ELIZABETH GWARTNEY	Art Unit 1791	AIA (First Inventor to File) Status No

-- The MAILING DATE of this communication appears on the cover sheet with the correspondence address --

Period for Reply

A SHORTENED STATUTORY PERIOD FOR REPLY IS SET TO EXPIRE 3 MONTHS FROM THE MAILING DATE OF THIS COMMUNICATION.

- Extensions of time may be available under the provisions of 37 CFR 1.136(a). In no event, however, may a reply be timely filed after SIX (6) MONTHS from the mailing date of this communication.
- If NO period for reply is specified above, the maximum statutory period will apply and will expire SIX (6) MONTHS from the mailing date of this communication.
- Failure to reply within the set or extended period for reply will, by statute, cause the application to become ABANDONED (35 U.S.C. § 133). Any reply received by the Office later than three months after the mailing date of this communication, even if timely filed, may reduce any earned patent term adjustment. See 37 CFR 1.704(b).

Status

1)☒ Responsive to communication(s) filed on *1/12/2017*.

☐ A declaration(s)/affidavit(s) under **37 CFR 1.130(b)** was/were filed on _____.

2a)☒ This action is **FINAL**. 2b)☐ This action is non-final.

3)☐ An election was made by the applicant in response to a restriction requirement set forth during the interview on _____; the restriction requirement and election have been incorporated into this action.

4)☐ Since this application is in condition for allowance except for formal matters, prosecution as to the merits is closed in accordance with the practice under *Ex parte Quayle*, 1935 C.D. 11, 453 O.G. 213.

Disposition of Claims*

5)☒ Claim(s) *1-5,7-9,11,12,32-43 and 45-55* is/are pending in the application.

5a) Of the above claim(s) _____ is/are withdrawn from consideration.

6)☐ Claim(s) _____ is/are allowed.

7)☒ Claim(s) *1-5,7-9,11,12,32-43 and 45-55* is/are rejected.

8)☐ Claim(s) _____ is/are objected to.

9)☐ Claim(s) _____ are subject to restriction and/or election requirement.

* If any claims have been determined allowable, you may be eligible to benefit from the **Patent Prosecution Highway** program at a participating intellectual property office for the corresponding application. For more information, please see http://www.uspto.gov/patents/init_events/pph/index.jsp or send an inquiry to PPHfeedback@uspto.gov.

Application Papers

10)☐ The specification is objected to by the Examiner.

11)☐ The drawing(s) filed on _____ is/are: a)☐ accepted or b)☐ objected to by the Examiner.

Applicant may not request that any objection to the drawing(s) be held in abeyance. See 37 CFR 1.85(a).

Replacement drawing sheet(s) including the correction is required if the drawing(s) is objected to. See 37 CFR 1.121(d).

Priority under 35 U.S.C. § 119

12)☐ Acknowledgment is made of a claim for foreign priority under 35 U.S.C. § 119(a)-(d) or (f).

Certified copies:

a)☐ All b)☐ Some** c)☐ None of the:

1.☐ Certified copies of the priority documents have been received.

2.☐ Certified copies of the priority documents have been received in Application No. _____.

3.☐ Copies of the certified copies of the priority documents have been received in this National Stage application from the International Bureau (PCT Rule 17.2(a)).

** See the attached detailed Office action for a list of the certified copies not received.

Attachment(s)

1) ☒ Notice of References Cited (PTO-892)

2) ☒ Information Disclosure Statement(s) (PTO/SB/08a and/or PTO/SB/08b) Paper No(s)/Mail Date _____.

3) ☐ Interview Summary (PTO-413) Paper No(s)/Mail Date. _____ .

4) ☐ Other: _____.

DETAILED ACTION

1. The present application is being examined under the pre-AIA first to invent provisions.

2. The Amendment filed January 12, 2017 has been entered. Claims 53-55 are new.

Claims 1-5, 7-9, 11, 12, 32-43 and 45-55 are pending.

Claim Objections

3. **Claim 55 is objected to because of the following informalities:** Claim 55 contains two period punctuation marks at the end of the sentence. Appropriate correction is required.

Claim Rejections - 35 USC § 112

4. The following is a quotation of the first paragraph of 35 U.S.C. 112(a):

> (a) IN GENERAL.—The specification shall contain a written description of the invention, and of the manner and process of making and using it, in such full, clear, concise, and exact terms as to enable any person skilled in the art to which it pertains, or with which it is most nearly connected, to make and use the same, and shall set forth the best mode contemplated by the inventor or joint inventor of carrying out the invention.

The following is a quotation of the first paragraph of pre-AIA 35 U.S.C. 112:

> The specification shall contain a written description of the invention, and of the manner and process of making and using it, in such full, clear, concise, and exact terms as to enable any person skilled in the art to which it pertains, or with which it is most nearly connected, to make and use the same, and shall set forth the best mode contemplated by the inventor of carrying out his invention.

5. **Claims 53-55 are rejected under 35 U.S.C. 112(a) or 35 U.S.C. 112 (pre-AIA), first paragraph, as failing to comply with the written description requirement. The claim(s) contains subject matter which was not described in the specification in such a way as to reasonably convey to one skilled in the relevant art that the inventor or a joint inventor, or for pre-AIA the inventor(s), at the time the application was filed, had possession of the claimed invention.**

New **claim 53** recites "incorporating into the meat replica matrix of the consumable product, a sugar, sugar alcohol, sugar acid or sugar derivative; and at least one sulfur compound."

In this case there is support for claiming that the meat replica may comprise sugars including monosaccharides, sugar alcohols, oligosaccharides, polysaccharides, sugar acids and sugar derivatives ([0154]) and the meat replica may comprises flavor precursor mix with specific combinations of sugars, amino acids and salts (*see* [0454]/Table 5) and [0475]/Table 8). There is no support for claiming incorporating, into the meat replica matrix of the consumable product, ***any*** combination of sugars and sulfur compounds. Moreover, while there is support for claiming sulfur compounds including methionine, cysteine and thiamine, when used in combination as part of a flavor precursor mix, there is no support for claiming ***any*** sulfur compound.

Claim Rejections - 35 USC § 103

6. The following is a quotation of pre-AIA 35 U.S.C. 103(a) which forms the basis for all obviousness rejections set forth in this Office action:

> (a) A patent may not be obtained though the invention is not identically disclosed or described as set forth in section 102, if the differences between the subject matter sought to be patented and the prior art are such that the subject matter as a whole would have been obvious at the time the invention was made to a person having ordinary skill in the art to which said subject matter pertains. Patentability shall not be negatived by the manner in which the invention was made.

7. The factual inquiries set forth in *Graham v. John Deere Co.*, 383 U.S. 1, 148 USPQ 459 (1966), that are applied for establishing a background for determining obviousness under pre-AIA 35 U.S.C. 103(a) are summarized as follows:

1. Determining the scope and contents of the prior art.
2. Ascertaining the differences between the prior art and the claims at issue.
3. Resolving the level of ordinary skill in the pertinent art.

4. Considering objective evidence present in the application indicating obviousness or nonobviousness.

8. This application currently names joint inventors. In considering patentability of the claims under pre-AIA 35 U.S.C. 103(a), the examiner presumes that the subject matter of the various claims was commonly owned at the time any inventions covered therein were made absent any evidence to the contrary. Applicant is advised of the obligation under 37 CFR 1.56 to point out the inventor and invention dates of each claim that was not commonly owned at the time a later invention was made in order for the examiner to consider the applicability of pre-AIA 35 U.S.C. 103(c) and potential pre-AIA 35 U.S.C. 102(e), (f) or (g) prior art under pre-AIA 35 U.S.C. 103(a).

9. **Claims 1-5, 7-9, 11, 12, 32-43 and 45-54 are rejected under pre-AIA 35 U.S.C. 103(a) as being unpatentable over Hsieh et al. (US 2012/0093994) in view of Proulx et al. ("Iron Bioavailability of Hemoglobin from Soy Root Nodules Using a Caco-2 Cell Culture Model" - J. Agric. Food Chem." 2006, p. 1518-1522).**

Regarding **claims 1, 4, 5, 7, 11, 12, 37, 43, 47, 50 and 51**, Hsieh et al. disclose a process of for making a structured plant protein product (i.e. meat analog), the process comprising extruding a mixture under conditions of elevated temperature and pressure to form the structured plant protein product, wherein the structured plant protein product comprises protein fibers that are substantially aligned, and wherein the structured plant protein product has a moisture content that is at least about 50% by weight of the structured plant protein product, and wherein the mixture comprises: (a) dry ingredients that comprise: (i) a protein component that comprises a plant-derived protein material, wherein the protein component is at an amount that is no more

than about 90% by weight of the dry ingredients; (ii) a carbohydrate component at an amount that is in the range of about 2 to about 50% by weight of the dry ingredients; and (iii) a lipid component at an amount that is in the range of about 0.1 to about 5% by weight of the dry ingredients; and (b) wet ingredients that comprise water ([0013]).

Hsieh et al. disclose wherein the structured plant protein product may comprises colorants wherein the concentration of colorants is adjusted to match the color of the animal meat to be simulated and a flavoring agent such as an animal meat flavor ([[0090]).

Given Hsieh et al. disclose a structured plant protein product comprising a flavoring agent including animal meat flavor, it follows that the structured plant protein product would exhibit, upon cooking, meaty flavor notes.

Hsieh et al. is silent with respect to a heme-containing protein from a non-animal source.

Proulx et al. teach that iron deficiency is a major nutritional problem and fortification of foods with iron has been a successful strategy for improving iron content of foods (p. 1518/Introduction). Proulx et al. teach that iron bioavailability is higher from heme iron sources because of lack of inhibition from chelating compounds (p. 1518/Introduction). Proulx et al. teach that heme iron in the human diet is almost exclusively from animal sources and its intake has been shown to have a positive correlation with iron status (p. 1520/Results and Discussion). Proulx et al. teach that the incorporation of animal sourced heme iron is often unfeasible because of economic costs and because cultural and religious barrier forbid the consumption of meat (p. 1520-1521/Results and Discussion).

Proulx et al. teach that heme iron in the human diet is generally present in animal sources as part of hemoglobin and myoglobin but is also found in many invertebrates, bacteria, fungi and

in the plant kingdom (p. 1518/Introduction). Proulx et al. teach leghemoglobin is a heme protein identified in soybean root nodules (p.1518/Introduction). Proulx et al. teach that the bioavailability of hemoglobin from soy root nodules is similar to that of heme iron from animal sources (p. 1521/Results and Discussion). Proulx et al. teach isolating and purifying plant hemoglobin from soy root nodules and using the leghemoglobin as a heme iron source in diets that are consumed by humans (i.e. adding to foodstuff -p. 1518/Introduction, p. 1519/LHb Preparation).

Given Proulx et al. teach that iron deficiency is a major nutritional problem and that fortification of foods with iron has been a successful strategy from improving iron content, since Proulx et al. teach that bioavailability is higher from heme iron sources including, leghemoglobin from soy root nodules, it would have been obvious to one of ordinary skill in the art to have fortified the structured plant protein product of Hsieh et al. comprising no animal protein, with leghemoglobin from soy root nodules, to obtain a product with improved nutritional status, i.e. bioavailable source of iron.

While Proulx et al. teach the use of leghemoglobin to fortify foods with iron, the reference is silent with respect to amount.

However, the skilled artisan would know how to adjust, in routine processing, the amount of leghemoglobin added to the structured plant protein product of Hsieh et al. to obtain the desired iron fortification.

Regarding **claims 2, 3, 8, 9, 48 and 49**, modified Hsieh et al. disclose all of the claim limitations as set forth above. Given Proulx et al. teach a heme-containing protein (leghemoglobin) from soy root nodules, intrinsically the heme-containing protein would exhibit a

VIS spectrum that would be identical to that of myoglobin from an animal and an amino acid sequence at least 70% homologous to that set forth in SEQ ID NO: 1.

Regarding **claims 5 and 12**, modified Hsieh et al. disclose all of the claim limitations as set forth above.

Regarding **claims 32 and 45**, modified Hsieh et al. disclose all of the claim limitations as set forth above.

Proulx et al. teach leghemoglobin isolated and purified from soy root nodules (p. 1519/LHb Preparation).

Regarding **claims 33-35, 38, 39-41, 46 and 52**, modified Hsieh et al. disclose all of the claim limitations as set forth above.

Given Hsieh et al. disclose soy protein in the form of soy protein isolate, soy protein concentrate, soy flour and mixtures thereof, it is clear Hsieh et al. disclose isolated and purified forms of plant protein. Moreover, given Hsieh et al. disclose plant proteins similar to those presently claimed, intrinsically the proteins would exhibit the claimed solubility properties.

Regarding **claims 36 and 42**, modified Hsieh et al. disclose all of the claim limitations as set forth above. Given Hsieh et al. disclose soy protein (i.e. legume protein), the limitations of **claims 36 and 42** are satisfied.

Regarding **claims 53 and 54**, modified Hsieh et al. disclose all of the claim limitations as set forth above. Hsieh et al. disclose additives may be added to the meat analog ([0060]) including sugars and polyalcohols such as sorbitol, mannitol, and xylitol; and an antioxidant such as N-acetylcysteine, benzyl isothiocyanate, or thiodipropionate (i.e. sulfur containing compound).

Response to Arguments

10. **Applicants' arguments filed January 12, 2017 have been fully considered but they are not persuasive.**

Applicants submit "Hsieh provides not reason to modify its meat analogs to include iron in the form of a heme protein for any reason, let alone to improve meat flavor." Applicants note, that while Hsieh discloses a meat analog that may comprise a nutrient such as a vitamin and/or mineral, including salts of aluminum, ammonium, calcium, magnesium and potassium, Hsieh does not disclose any form of iron.

Here, while Proulx et al. distinctly teaches the use of hemoglobin from soy root nodules to fortify corn tortillas, the reference also teaches the overall concept of using plant hemoglobin as a plant heme iron source in diets that are consumed by humans. Proulx et al. teach the general concept that heme iron from plants sources can provide highly bioavailable iron as a food fortificant. Given Hsieh et al. is directed to a structured plant protein product (i.e. meat analog) comprising 0% meat, since Proulx et al. teach that heme iron in the human diet is generally present in animal sources as a part of hemoglobin and myoglobin and since Proulx et al. teach the use of heme iron from plant sources as a food fortificant, one of ordinary skill in the art would have been motivated to try fortifying the structured plant protein product (i.e. meat analog) of Hsieh et al. as taught by Proulx et al.

Applicants submit "a person of ordinary skill in the art would have understood why Hsieh does not add iron to the Hsieh's meat analog, because it was known in the art that iron can cause deleterious off-odor consequences (e.g., oxidation and rancidity) in foods and especially meat products."

While Calkins et al. note a study relating the off-flavor of specific beef muscles with heme iron and pH content and Yancey et al. note the effects of iron, myoglobin, hemoglobin and lipid oxidation on livery flavor development in cooked beef steaks, there is no disclosure in either reference that would lead one of ordinary skill in the art away from supplementing a ***non-animal protein product***, such as the meat analog of Hsieh et al., with heme iron from plant sources. Hsieh et al. clearly disclose a meat analog product comprising 0% animal meat.

Here, Proulx discloses that fortification iron has a ***potential*** negative effect on organoleptic quality of maize product because soluble forms of iron can cause oxidative rancidity. However, Proulx also discloses the successful use of purified soy leghemoglobin as an iron source for the fortification of maize tortillas. Again, there is no disclosure in Proulx that would lead one of ordinary skill in the art away from exploring the use of soy leghemoglobin as an iron source for the fortification of foods.

Applicants submit, “Hseih [sic] affirmatively teaches the inclusion of animal meat to improve the animal flavor of its meat analogs." Regarding Hsieh’s disclose of an animal meat flavor in paragraph [0090], Applicants submit "[i]t is not clear, however, what is meant by "animal meat flavor." Applicants submit "other than animal meat, Hsieh does not teach or suggest what composition or agent that could be added to its meat analog which would exhibit, upon cooking, an animal meat flavor.” Applicants submit “taking into consideration the express teaching at paragraph [0084], stating that the addition of animal meat imparts an "animal meat flavor," Hseih [sic] at least suggest that animal meat is the "animal meat flavor" flavoring agent described at paragraph [0090].” Therefore, Applicants argue “the Office has not met its burden

of identifying a meat replica product that "contains no animal products" and which would exhibit, upon cooking, a beef-like flavor."

While Hsieh et al. disclose adding meat to its meat analogs to impart animal meat flavor, Hsieh et al. clearly disclose a meat analog product comprising 0% meat wherein the meat analog may comprises flavoring agents such as animal meat flavor. Here, Hsieh et al. use the term "animal meat flavor" in two completely different context; (1) adding meat to contribute animal meat flavor to a meat analog ([0084]); and (2) adding an animal meat flavor flavoring agent to impart meat flavor to a meat analog ([0090]). It is clear Hsieh et al. disclose two different modes of adding an animal meat flavor to its meat analog. There is no evidence that the flavoring agent, animal meat flavor, would necessarily be an "animal product."

Applicants submit "Proulx provides no reason to fortify a meat analog or any other type of meat alternative with iron." Applicants argue "defining the problem in terms of its solution reveals improper hindsight in the selection of the prior art relevant to obviousness."

Here, the motivation to combine the references comes from Proulx et al. Proulx et al. teach that iron deficiency is a major nutritional problem and fortification of foods with iron has been a successful strategy for improving iron content of foods (p. 1518/Introduction). Proulx et al. teach that iron bioavailability is higher from heme iron sources because of lack of inhibition from chelating compounds (p. 1518/Introduction). Proulx et al. teach that heme iron in the human diet is almost exclusively from animal sources and its intake has been shown to have a positive correlation with iron status (p. 1520/Results and Discussion). Proulx et al. teach that the incorporation of animal sourced heme iron is often unfeasible because of economic costs and

because cultural and religious barrier forbid the consumption of meat (p. 1520-1521/Results and Discussion).

In response to applicant's argument that the examiner's conclusion of obviousness is based upon improper hindsight reasoning, it must be recognized that any judgment on obviousness is in a sense necessarily a reconstruction based upon hindsight reasoning. But so long as it takes into account only knowledge which was within the level of ordinary skill at the time the claimed invention was made, and does not include knowledge gleaned only from the applicant's disclosure, such a reconstruction is proper. See *In re McLaughlin*, 443 F.2d 1392, 170 USPQ 209 (CCPA 1971).

Applicants submit "[t]he prior art does not recognize there is a problem of iron deficiency in of meat analogs or other meat alternatives." Applicants submit "[a]t the time the present application was filed, iron supplementation of meat analogs or meat alternatives was not a recognized problem in the art."

While the iron supplementation of meat analogs or meat alternatives might not have been recognized, Proulx et al. recognizes that iron deficiency is a major nutritional problem and fortification of foods with iron has been a successful strategy for improving iron content of foods (p. 1518/Introduction). Given Proulx et al. teach that iron deficiency is a major nutritional problem and that fortification of foods with iron has been a successful strategy from improving iron content, since Proulx et al. teach that bioavailability is higher from heme iron sources including, leghemoglobin from soy root nodules, it would have been obvious to one of ordinary skill in the art to have fortified the structured plant protein product of Hsieh et al. comprising no

animal protein, with leghemoglobin from soy root nodules, to obtain a product with improved nutritional status, i.e. bioavailable source of iron.

Applicants submit "[t]he Office has not met its prima facie burden of establishing a reasonable expectation of success in modifying Hsieh with Proulx. Applicants submit Proulx disclose that "the particular type of food (e.g. , the food matrix) is an important factor in determining the bioavailability of iron." Applicants argue "it would not have been reasonable predictable to the skilled artisan from Hsieh that the leghemoglobin of Proulx would effectively function as an iron fortificant in any food product, much less the meat analog of Hsieh."

Here, Proulx et al. teach that fortification of foods with iron has been a successful strategy for improving iron content of foods; however, the bioavailability of iron fortificants is often decreased due to the presence of inhibitors within the food matrix." However, Proulx et al. also teach that iron bioavailability is higher from heme iron sources because of the ***lack of inhibition*** from chelating compounds including polyphenols and phytate and because of its intact absorption by pathways different than those of nonheme iron (p. 1518/Introduction). Clearly, Proulx et al. provide the motivation to try heme iron sources for iron fortification within any food matrix.

While Uauy et al. disclose the technical and practical barrier to iron fortification and the use of high bioavailability iron compounds is limited by the matrix, it remains, Proulx et al. provides the motivation to try using a heme iron source for the fortification of any food matrix. In particular, one of ordinary skill in the art would consider fortifying the meat analog of Hsieh because it contains no meat and heme iron in the human diet is generally present in animal sources. Moreover, one of ordinary skill in the art would have considered using the

leghemoglobin of Proulx et al. when attempting to make a product with no animal products in it (p. 1520-1521/Results and Discussion).

Applicants submit "[t]he effect of a heme-containing protein on the organoleptic properties of a food product was unpredictable, if not expected to be likely negative." Applicants submit "a person having ordinary skill in the art would understand that heme iron has been associated in the art with oxidation and off-flavors in meat."

Here, given Proulx et al. disclose the successful use of leghemoglobin for iron fortification of maize tortillas, since Hsieh et al. teach a meat analog comprising 0% meat, one of ordinary skill in the art would be motivated to try to fortify the meat analog of Hsieh et al., with leghemoglobin, as taught by Proulx et al., with reasonable expectation of success.

Conclusion

11. The prior art made of record and not relied upon is considered pertinent to applicant's disclosure.

-Cerny et al. ("Formation of Aroma Compounds from Ribose and Cysteine during the Maillard Reaction" – *J. Agric. Food Chem.*, 51, 2003, pp. 2714-2721).

12. Applicant's amendment necessitated the new ground(s) of rejection presented in this Office action. Accordingly, **THIS ACTION IS MADE FINAL**. See MPEP § 706.07(a). Applicant is reminded of the extension of time policy as set forth in 37 CFR 1.136(a).

A shortened statutory period for reply to this final action is set to expire THREE MONTHS from the mailing date of this action. In the event a first reply is filed within TWO MONTHS of the mailing date of this final action and the advisory action is not mailed until after

the end of the THREE-MONTH shortened statutory period, then the shortened statutory period will expire on the date the advisory action is mailed, and any extension fee pursuant to 37 CFR 1.136(a) will be calculated from the mailing date of the advisory action. In no event, however, will the statutory period for reply expire later than SIX MONTHS from the date of this final action.

Any inquiry concerning this communication or earlier communications from the examiner should be directed to ELIZABETH GWARTNEY whose telephone number is (571)270-3874. The examiner can normally be reached on M-F.

Examiner interviews are available via telephone, in-person, and video conferencing using a USPTO supplied web-based collaboration tool. To schedule an interview, applicant is encouraged to use the USPTO Automated Interview Request (AIR) at http://www.uspto.gov/interviewpractice.

If attempts to reach the examiner by telephone are unsuccessful, the examiner's supervisor, D. Lawrence Tarazano can be reached on (571) 272-1515. The fax phone number for the organization where this application or proceeding is assigned is 571-273-8300.

Information regarding the status of an application may be obtained from the Patent Application Information Retrieval (PAIR) system. Status information for published applications may be obtained from either Private PAIR or Public PAIR. Status information for unpublished applications is available through Private PAIR only. For more information about the PAIR system, see http://pair-direct.uspto.gov. Should you have questions on access to the Private PAIR system, contact the Electronic Business Center (EBC) at 866-217-9197 (toll-free). If you would like assistance from a USPTO Customer Service Representative or access to the automated information system, call 800-786-9199 (IN USA OR CANADA) or 571-272-1000.

/ELIZABETH GWARTNEY/
Primary Examiner, Art Unit 1791

Notice of References Cited	Application/Control No. 14/796,970	Applicant(s)/Patent Under Reexamination VRLJIC ET AL.	
	Examiner ELIZABETH GWARTNEY	Art Unit 1791	Page 1 of 1

U.S. PATENT DOCUMENTS

*		Document Number Country Code-Number-Kind Code	Date MM-YYYY	Name	CPC Classification	US Classification
	A	US-				
	B	US-				
	C	US-				
	D	US-				
	E	US-				
	F	US-				
	G	US-				
	H	US-				
	I	US-				
	J	US-				
	K	US-				
	L	US-				
	M	US-				

FOREIGN PATENT DOCUMENTS

*		Document Number Country Code-Number-Kind Code	Date MM-YYYY	Country	Name	CPC Classification
	N					
	O					
	P					
	Q					
	R					
	S					
	T					

NON-PATENT DOCUMENTS

*		Include as applicable: Author, Title Date, Publisher, Edition or Volume, Pertinent Pages)
	U	Cerny et al., “Formation of Aroma Compounds from Ribose and Cysteine during the Maillard Reaction” – J. Agric. Food Chem., 51, 2003, pp. 2714-2721.
	V	
	W	
	X	

*A copy of this reference is not being furnished with this Office action. (See MPEP § 707.05(a).)
Dates in MM-YYYY format are publication dates. Classifications may be US or foreign.

Receipt date: 03/20/2017

Sheet 1 of 1

Substitute Disclosure Form	U.S. Department of Commerce Patent and Trademark Office	Attorney Docket No. 38767-0010001	Application No. 14/796,970
Information Disclosure Statement by Applicant (Use several sheets if necessary)		Applicant Impossible Foods Inc.	
(37 CFR §1.98(b))		Filing Date July 10, 2015	Group Art Unit 1791

U.S. Patent Documents

Examiner Initial	Desig. ID	Document Number	Publication Date	Patentee	Class	Subclass	Filing Date If Appropriate

Foreign Patent Documents or Published Foreign Patent Applications

Examiner Initial	Desig. ID	Document Number	Publication Date	Country or Patent Office	Class	Subclass	Translation Yes	Translation No

Other Documents (include Author, Title, Date, and Place of Publication)

Examiner Initial	Desig. ID	Document
/E.G./	1.	Fang et al., "Food Nutrition health theory and technology," China light industry press, p. 448, January 31, 1997 (English Translation)
/E.G./	2.	Zhengnong et al., "Cihai biological fascicle," Shanghai Lexicographical Publishing House, P.243, December 31, 1987 (English Translation)

Examiner Signature	Date Considered
/ELIZABETH GWARTNEY/	04/11/2017

EXAMINER: Initials citation considered. Draw line through citation if not in conformance and not considered. Include copy of this form with next communication to applicant.

Substitute Disclosure Form

EAST Search History

EAST Search History (Prior Art)

Ref #	Hits	Search Query	DBs	Default Operator	Plurals	Time Stamp
L1	14	A23L1/31427	US-PGPUB; USPAT; USOCR; FPRS; EPO; JPO; DERWENT; IBM_TDB	OR	OFF	2017/04/11 08:53
L2	0	A23L5/00 WITH meat	US-PGPUB; USPAT; USOCR; FPRS; EPO; JPO; DERWENT; IBM_TDB	OR	OFF	2017/04/11 08:54
L3	278	A23L5/00 AND meat	US-PGPUB; USPAT; USOCR; FPRS; EPO; JPO; DERWENT; IBM_TDB	OR	OFF	2017/04/11 08:54
L4	2070	A23L13/426	US-PGPUB; USPAT; USOCR; FPRS; EPO; JPO; DERWENT; IBM_TDB	OR	OFF	2017/04/11 08:56
L5	13	A23L13/426 AND (heme OR iron)	US-PGPUB; USPAT; USOCR; FPRS; EPO; JPO; DERWENT; IBM_TDB	OR	OFF	2017/04/11 08:56
L6	1185	A23L13/424	US-PGPUB; USPAT; USOCR; FPRS; EPO; JPO; DERWENT; IBM_TDB	OR	OFF	2017/04/11 08:57
L7	11	A23L13/424 AND heme	US-PGPUB; USPAT; USOCR; FPRS; EPO; JPO; DERWENT; IBM_TDB	OR	OFF	2017/04/11 08:57
L8	2508	A23L27/26	US-PGPUB; USPAT; USOCR; FPRS; EPO; JPO; DERWENT; IBM_TDB	OR	OFF	2017/04/11 08:57
L9	1	A23L27/26 AND heme	US-PGPUB; USPAT; USOCR; FPRS; EPO; JPO; DERWENT; IBM_TDB	OR	OFF	2017/04/11 08:57
S1	705	((heme ADJ protein) OR myoglobin OR hemoglobin) WITH meat	US-PGPUB; USPAT; USOCR; FPRS; EPO; JPO; DERWENT; IBM_TDB	OR	OFF	2015/09/10 10:54
S2	128	((heme ADJ protein) OR myoglobin OR hemoglobin) WITH heterologous	US-PGPUB; USPAT; USOCR; FPRS; EPO; JPO; DERWENT; IBM_TDB	OR	OFF	2015/09/10 10:54
S3	6	"8927490"	US-PGPUB; USPAT; USOCR; FPRS; EPO; JPO; DERWENT; IBM_TDB	OR	OFF	2015/09/10 12:05
S4	1131	A23L1/31427	US-PGPUB; USPAT; USOCR; FPRS; EPO; JPO; DERWENT; IBM_TDB	OR	OFF	2015/09/10 12:18
S5	0	"14796970"	US-PGPUB; USPAT; USOCR; FPRS; EPO; JPO; DERWENT; IBM_TDB	OR	OFF	2015/09/10 12:25
S8	4	"20100074998"	US-PGPUB; USPAT; USOCR; FPRS; EPO; JPO; DERWENT; IBM_TDB	OR	OFF	2016/02/19 09:21
S9	12709	vegetable ADJ protein	US-PGPUB; USPAT; USOCR; FPRS; EPO; JPO;	OR	OFF	2016/02/19 12:50

			DERWENT; IBM_TDB			
S10	434	(vegetable ADJ protein) AND legume	US-PGPUB; USPAT; USOCR; FPRS; EPO; JPO; DERWENT; IBM_TDB	OR	OFF	2016/02/19 12:50
S11	353	(meat) WITH (substitute OR replica) WITH (soy OR pea)	US-PGPUB; USPAT; USOCR; FPRS; EPO; JPO; DERWENT; IBM_TDB	OR	OFF	2016/02/21 09:49
S12	2032	(meat) WITH (substitute OR replica)	US-PGPUB; USPAT; USOCR; FPRS; EPO; JPO; DERWENT; IBM_TDB	OR	OFF	2016/02/21 09:50
S13	7	(meat ADJ replica)	US-PGPUB; USPAT; USOCR; FPRS; EPO; JPO; DERWENT; IBM_TDB	OR	OFF	2016/02/21 09:50
S14	806	(meat ADJ substitute)	US-PGPUB; USPAT; USOCR; FPRS; EPO; JPO; DERWENT; IBM_TDB	OR	OFF	2016/02/21 09:50
S15	34	(meat ADJ substitute) WITH (soy ADJ protein)	US-PGPUB; USPAT; USOCR; FPRS; EPO; JPO; DERWENT; IBM_TDB	OR	OFF	2016/02/21 10:25
S16	1079	Hseih	US-PGPUB; USPAT; USOCR; FPRS; EPO; JPO; DERWENT; IBM_TDB	OR	OFF	2016/02/21 10:28
S17	4	"20120093994"	US-PGPUB; USPAT; USOCR; FPRS; EPO; JPO; DERWENT; IBM_TDB	OR	OFF	2016/02/21 11:16
S18	1	"14796970"	US-PGPUB; USPAT; USOCR; FPRS; EPO; JPO; DERWENT; IBM_TDB	OR	OFF	2016/03/09 14:59
S19	4	"20120093994"	US-PGPUB; USPAT; USOCR; FPRS; EPO; JPO; DERWENT; IBM_TDB	OR	OFF	2016/03/09 15:30
S20	98	(meat ADJ (substitute OR analog)) WITH (soy ADJ protein)	US-PGPUB; USPAT; USOCR; FPRS; EPO; JPO; DERWENT; IBM_TDB	OR	OFF	2016/03/10 15:36
S21	17	leghemoglobin WITH iron	US-PGPUB; USPAT; USOCR; FPRS; EPO; JPO; DERWENT; IBM_TDB	OR	OFF	2016/07/06 14:58
S22	1	"14796970"	US-PGPUB; USPAT; USOCR; FPRS; EPO; JPO; DERWENT; IBM_TDB	OR	OFF	2016/07/07 08:51
S23	16	hemoglobin AND (beef ADJ flavor)	US-PGPUB; USPAT; USOCR; FPRS; EPO; JPO; DERWENT; IBM_TDB	OR	OFF	2016/07/07 09:07
S24	0	hemoglobin WITH (beef ADJ flavor)	US-PGPUB; USPAT; USOCR; FPRS; EPO; JPO; DERWENT; IBM_TDB	OR	OFF	2016/07/07 09:10
S25	0	hemoglobin NEAR (beef ADJ flavor)	US-PGPUB; USPAT; USOCR; FPRS; EPO; JPO; DERWENT; IBM_TDB	OR	OFF	2016/07/07 09:10
S26	0	leghemoglobin NEAR (beef ADJ flavor)	US-PGPUB; USPAT; USOCR; FPRS; EPO; JPO; DERWENT; IBM_TDB	OR	OFF	2016/07/07 09:10
S27	0	globin NEAR (beef ADJ flavor)	US-PGPUB; USPAT; USOCR; FPRS; EPO; JPO; DERWENT; IBM_TDB	OR	OFF	2016/07/07 09:10
S28	9	"9011949"	US-PGPUB; USPAT; USOCR; FPRS; EPO; JPO;	OR	OFF	2016/07/07 12:57

			DERWENT; IBM_TDB			
S29	4	"20120093994"	US-PGPUB; USPAT; USOCR; FPRS; EPO; JPO; DERWENT; IBM_TDB	OR	OFF	2017/04/10 13:15

EAST Search History (Interference)

Ref #	Hits	Search Query	DBs	Default Operator	Plurals	Time Stamp
S6	0	"14796970"	USPAT	OR	OFF	2015/09/10 12:25
S7	0	"14796970"	US-PGPUB; USPAT	OR	OFF	2015/09/10 12:26

4/11/2017 8:57:57 AM
C:\Users\egwartney\Documents\EAST\Workspaces\14796970.wsp

Receipt date: 02/15/2017

Sheet 1 of 1

Substitute Disclosure Form U.S. Department of Commerce Patent and Trademark Office	Attorney Docket No. 38767-0010001	Application No. 14/796,970
Information Disclosure Statement by Applicant (Use several sheets if necessary)	Applicant Impossible Foods Inc.	
(37 CFR §1.98(b))	Filing Date July 10, 2015	Group Art Unit 1791

U.S. Patent Documents

Examiner Initial	Desig. ID	Document Number	Publication Date	Patentee	Class	Subclass	Filing Date If Appropriate

Foreign Patent Documents or Published Foreign Patent Applications

Examiner Initial	Desig. ID	Document Number	Publication Date	Country or Patent Office	Class	Subclass	Translation Yes	Translation No

Other Documents (include Author, Title, Date, and Place of Publication)

Examiner Initial	Desig. ID	Document
/E.G./	1.	Aubrey, "Food For Thought: Saving The Planet, One Burger At A Time: This Juicy Patty Is Meat-Free," The Salt, February 11, 2017, retrieved on February 14, 2017, retrieved from <http://www.npr.org/sections/thesalt/2017/02/11/514544431/saving-the-planet-one-burger-at-a-time-this-juicy-patty-is-meat-free>, 14 pages

Examiner Signature /ELIZABETH GWARTNEY/	Date Considered 04/11/2017
EXAMINER: Initials citation considered. Draw line through citation if not in conformance and not considered. Include copy of this form with next communication to applicant.	

Substitute Disclosure Form

Receipt date: 01/12/2017

Sheet 1 of 5

Substitute Disclosure Form U.S. Department of Commerce Patent and Trademark Office	Attorney Docket No. 38767-0010001	Application No. 14/796,970
Information Disclosure Statement by Applicant (Use several sheets if necessary)	Applicant Impossible Foods Inc.	
(37 CFR §1.98(b))	Filing Date July 10, 2015	Group Art Unit 1791

U.S. Patent Documents

Examiner Initial	Desig. ID	Document Number	Publication Date	Patentee	Class	Subclass	Filing Date If Appropriate

Foreign Patent Documents or Published Foreign Patent Applications

Examiner Initial	Desig. ID	Document Number	Publication Date	Country or Patent Office	Class	Subclass	Translation Yes	Translation No
/E.G./	1.	EP 0500132	8/26/1992	EPO				
/E.G./	2.	EP 1529444	5/11/2005	EPO				
/E.G./	3.	JP 2009171877	8/6/2009	JAPAN			English Abstract	
/E.G./	4.	JP 2011000073	1/6/2011	JAPAN			X	
/E.G./	5.	JP S54122766	9/22/1979	JAPAN			English Abstract	
/E.G./	6.	JP S5959151	4/4/1984	JAPAN			English Abstract	
/E.G./	7.	WO 1997/01961	1/23/1997	WIPO				

Other Documents (include Author, Title, Date, and Place of Publication)

Examiner Initial	Desig. ID	Document
/E.G./	8.	"Veggie burgers that look, taste, and bleed like real meat," CBS News, August 9, 2016, retrieved August 25, 2016 <http://www.cbsnews.com/news/food-trend-veggie-burgers-that-look-bleed-taste-like-real-meat/>, 4 pages
/E.G./	9.	"Watch Momofuku Cook Impossible Foods' Plant-Based Burger that 'Bleeds'," Vice, July 27, 2016, retrieved August 25, 2016, <https://munchies.vice.com/en/videos/watch-momofuku-cook-impossible-foods-plant-based-burger-that-bleeds>, 3 pages
/E.G./	10.	Belitz et al., "Aroma Compounds," Food Chemistry, Springer 2009, pp. 340-402
/E.G./	11.	Belitz et al., "Fig. 5.19-5.21," Aroma Substances, p. 368
/E.G./	12.	Brewer, "The Chemistry of Beef Flavor," December, 2006, retrieved on August 30, 2016, <http://beefresearch.org/CMDocs/BeefResearch/The%20Chemistry%20of%20Beef%20Flavor.pdf>
/E.G./	13.	Brooks et al., "Prediction of beef flavor by precursor and volatile compounds Principal Investigators: Funded by The Beef Checkoff," Texas Tech University, May 31, 2012, retrieved August 30, 2016, <http://www.beefresearch.org/CMDocs/BeefResearch/PE_Project_Summaries_FY11Prediction_of_beef_flavor.pdf>
/E.G./	14.	Bunge et al., "Quest Heats up for Alternatives to Beef," The Wall Street Journal, Business News, November 4, 2016, page B5
/E.G./	15.	Burdock, "Fenaroli's handbook of flavor ingredients," CRC press, 17 pages (2016)
/E.G./	16.	Cadwallader and Macleod, "16 Instrumental methods for analyzing the flavor of muscle foods," Flavor of Meat, Meat Products and Seafoods, 18 pages (1998)

Examiner Signature	Date Considered
/ELIZABETH GWARTNEY/	04/11/2017

EXAMINER: Initials citation considered. Draw line through citation if not in conformance and not considered. Include copy of this form with next communication to applicant.

Substitute Disclosure Form

Receipt date: 01/12/2017

Sheet 2 of 5

Substitute Disclosure Form	U.S. Department of Commerce Patent and Trademark Office	Attorney Docket No. 38767-0010001	Application No. 14/796,970
Information Disclosure Statement by Applicant (Use several sheets if necessary)		Applicant Impossible Foods Inc.	
(37 CFR §1.98(b))		Filing Date July 10, 2015	Group Art Unit 1791

Other Documents (include Author, Title, Date, and Place of Publication)

Examiner Initial	Desig. ID	Document
/E.G./	17.	Calkins et al., "A fresh look at meat flavor," Meat Science, 77(1):63-80 (2007)
/E.G./	18.	Chamlee, "Why Do People Want Veggie Burgers That Bleed?," Eater, July 25, 2016, retrieved August 25, 2016, <http://www.eater.com/2016/7/25/12270698/lab-grown-meat-beyond-burger-impossible-foods>, 11 pages
/E.G./	19.	Chaudhari et al., "The cell biology of taste," 190(3):285-296 (August 2010)
/E.G./	20.	Chen et al., "Effect of Urea on Volatile Generation from Maillard Reaction of Cysteine and Ribose," J. Agric. Food Chem., 48:3512-3516 (2000)
/E.G./	21.	Chen et al., "Influence of DNA on Volatile Generation from Maillard Reaction of Cysteine and Ribose," Nutraceutical Beverages, American Chemical Society, pp. 427-442 (December 2003)
/E.G./	22.	Dai, "David Chang Adds Plant Based 'Impossible Burger' to Nishi Menu," July 26, 2016, retrieved July 27, 2016 <http://ny.eater.com/2016/7/26/12277310/david-chang-impossible-burger-nishi>, 6 pages
/E.G./	23.	D'Onfro, "I tried the plant-based meat that Google wanted to buy and I never want to eat a 'real' hamburger again" Business Insider, June 12, 2016, retrieved June 14, 2016, <http://www.businessinsider.com/impossible-burgers-taste-test-2016-6>, 14 pages
/E.G./	24.	Donnelly, "Meet the Impossible Burget: It Looks and Taskes Like the Real Thing But Is Totally Meat-Free," Vogue, August 1, 2016, retreived August 25, 2016 <http://www.vogue.com/13462891/impossible-burger-meat-free-vegan-david-chang/>, 6 pages
/E.G./	25.	Elmore et al., "Effect of the Polyunsaturated Fatty Acid Composition of Beef Muscle on the Profile of Aroma Volatiles," J. Agric. Food Chem. 47:1619-1625 (1999)
/E.G./	26.	Etienne, "Eating the plant-derived Impossible Burget cooked by Momofuku's David Chang," Tech Crunch, July 26, 2016, retrieved August 25, 2016, <https://techcrunch.com/2016/07/26/eating-the-plant-derived-impossible-burger-cooked-by-momofukus-david-chang/>, 9 pages
/E.G./	27.	European Search Report for International Application No. EP 14737766, dated July 15, 2016, 11 pages
/E.G./	28.	Fang et al., "Food Nutrition health theory and technology," China light industry press, p. 448, January 31, 1997 (Chinese Version)
/E.G./	29.	Fourth Chinese Office Action in Chinese Application No. 201280041713.1, dated 11/11/2016, 18 pages (with translation)
/E.G./	30.	Gilbert et al., "The revolutionary meatless burger from Impossible Foods is perfect for begtarians and carnivores alike," Tech Insider, August 4, 2016, retrieved on August 25, 2016, <http://www.techinsider.io/the-impossible-foods-burger-review-vegetarian-2016-8>, 9 pages
/E.G./	31.	Grigorakis et al., "Organoleptic and volatile aroma compounds comparison of wild and cultured gilthead sea bream (Sparus aurata): sensory differences and possible chemical basis," Aquaculture 225:109-119 (2003)
/E.G./	32.	Grobart, "Making a Steak Without a Cow," Bloomberg Technology, June 21, 2016, retrieved June 23, 2016 <http://www.bloomberg.com/news/articles/2016-06-21/making-a-steak-without-the-cow>, 2 pages
/E.G./	33.	Grosch, "Evaluation of the Key Odorants of Food by Dilution Experiments, Aroma Models and Omission," Chem. Senses 26:533-545 (June 2001)

Examiner Signature	Date Considered
/ELIZABETH GWARTNEY/	04/11/2017

EXAMINER: Initials citation considered. Draw line through citation if not in conformance and not considered. Include copy of this form with next communication to applicant.

Substitute Disclosure Form

Receipt date: 01/12/2017

Substitute Disclosure Form	U.S. Department of Commerce Patent and Trademark Office	Attorney Docket No. 38767-0010001	Application No. 14/796,970
Information Disclosure Statement by Applicant (Use several sheets if necessary)		Applicant Impossible Foods Inc.	
(37 CFR §1.98(b))		Filing Date July 10, 2015	Group Art Unit 1791

Other Documents (include Author, Title, Date, and Place of Publication)

Examiner Initial	Desig. ID	Document
/E.G./	34.	Hannah, "A fermented feast," Bittersweet, retrieved on November 3, 2016, retrieved from <https://bittersweetblog.com/2010/06/09/a-fermented-feast/>, 2 pages
/E.G./	35.	Herper, "Mission Impossible Burger: Tasting The Fake Meat That Wants To Save The World," Forbes, July 28, 2016, retrieved on August 25, 2016, <http://www.forbes.com/sites/matthewherper/2016/07/28/mission-impossible-burger-tasting-the-fake-meat-that-wants-to-save-the-world/#57781d823c43>, 6 pages
/E.G./	36.	Hoshaw, "Silicon Valley's Bloody Plant Burger Smells, Tastes and Sizzles Like Meat" the salt, June 21, 2016, retrieved June 21, 2016 <http://www.npr.org/sections/thesalt/2016/06/21/482322571/silicon-valley-s-bloody-plant-burger-smells-tastes-and-sizzles-like-meat>, 8 pages
/E.G./	37.	Hui et al., "Handbook of meat and meat processing," CRC Press, 2012, retrieved on December 05, 2016, retrieved from <https://www.crcpress.com/Handbook-of-Meat-and-Meat-Processing-Second-Edition/Hui/p/book/9781439836835>, 3 pages
/E.G./	38.	Jublot et al., "Quantitation of sulphur aroma compounds in maillard model reaction systems of different composition," Expression of Multidisciplinary Flavour Science, 4 pages (2010)
/E.G./	39.	Karahadian et al., "Action of Tocopherol-Type Compounds in Directing Reactions Forming Flavor Compounds in Autoxidizing Fish Oils," J. Amer. Oil Chem. Soc., 66:1302-8 (1989)
/E.G./	40.	Kerscher et al., "Quantification of 2-Methyl-3-furnathiol, 2-Furfurylthiol, 3-Mercapto-2-pentanone in Heated Meat," J. Agric. Food Chem. 46:1954-1958 (1996)
/E.G./	41.	Kerth and Miller, "Beef flavor: a review from chemistry to consumer," 25 pages (2015)
/E.G./	42.	Khan et al., "Meat flavor precursors and factors influencing flavor precursors- A systematic review," Meat Science, 110:278-284 (December 2010)
/E.G./	43.	Lane et al., "The Variety of Odors Produced in Maillard Model Systems and How They are Influenced by Reaction Conditions," The Maillard Reaction in Foods and Nutrition, American Chemical Society, pp. 141-158 (April 1983)
/E.G./ /E.G./	44.	Leduc et al., "Differentiation of fresh and frozen/thawed fish, European sea bass (Dicentrarchus labrax), gilthead seabream (Sparus aurata), cod (Gadus morhua) and salmon (Salmo salar), using volatile compounds by SPME/GC/MS," J. Sci. Food Agric., 92:2560-80 (2012)
/E.G./	45.	Lopez, "We just tried the 'Impossible Burger' - the meatless burger NYC has been waiting for," Business Insider, July 27, 2016, retrieved on August 25, 2016, <http://www.businessinsider.com/what-the-impossible-burger-tastes-like-2016-7>, 5 pages
/E.G./	46.	Marshall et al., "We Tried the "Bleeding" Vegetarian Burger And It Was Actually Good," July 27, 2016, retrieved July 28, 2016 <https://www.buzzfeed.com/chelseamarshall/bleeding-vegetable-burger?utm_term=.jaa03Kyo7#.ogV0m7MAW>, 10 pages
/E.G./	47.	McGorrin, "Advances in Dairy Flavor Chemistry," Food Flavors and Chemistry: Advances of the New Millennium, Spanier, A. M.; Shahidi,F.; Parliment, T. H.; Mussinan, C. J.; Ho, C.-T.; Contis, E. T., Eds., Royal Society of Chemistry, Cambridge, pp. 67-84 (2001)
/E.G./	48.	McGorrin, "Character-impact flavor and off-flavor compounds in foods," Flavor, Fragrance, and Odor Analysis, 2nd, 207-262 (2012).
/E.G./	49.	McGorrin, "The significance of volatile sulfur compounds in food flavors," Volatile sulfur compounds in food 1068, 29 pages (2011).

Examiner Signature	Date Considered
/ELIZABETH GWARTNEY/	04/11/2017

EXAMINER: Initials citation considered. Draw line through citation if not in conformance and not considered. Include copy of this form with next communication to applicant.

Substitute Disclosure Form

Receipt date: 01/12/2017

Sheet _4_ of _5_

Substitute Disclosure Form	U.S. Department of Commerce Patent and Trademark Office	Attorney Docket No. 38767-0010001	Application No. 14/796,970
Information Disclosure Statement by Applicant (Use several sheets if necessary)		Applicant Impossible Foods Inc.	
(37 CFR §1.98(b))		Filing Date July 10, 2015	Group Art Unit 1791

Other Documents (include Author, Title, Date, and Place of Publication)

Examiner Initial	Desig. ID	Document
/E.G./	50.	Moon et al., "Odour-active components of simulated beef flavour analyzed by solid phase microextraction and gas chromatography-mass spectrometry and -olfactometry," Food Research International, 39:294-308 (April 2006)
/E.G./	51.	Morita, "Comparison of aroma characteristics of 16 fish species by sensory evaluation and gas chromatographic analysis," J. Sci. Food Agric., 83:289-297 (2003)
/E.G./	52.	Mottram, "Flavour formation in meat and meat products: a review," Food Chemistry, 62(4):415-24 (August 1998)
/E.G./	53.	Mottram, "An Overview of the Contribution of Sulfur-Containing Compounds to the Aroma in Heated Foods," Heteroatomic Aroma Compounds, American Chemical Society, pp. 73-92 (August 2002)
/E.G./	54.	Proulx, "Diversified strategies for improving iron bioavailability of maize," Iowa State University - Retrospective Theses and Dissertations, 2007 retrieved on September 19, 2016, retrieved from <http://lib.dr.iastate.edu/rtd/15852/>, 144 pages
/E.G./	55.	Ramos et al., "What is Masa? - Ingredient Intelligence," The Kitchn, retrieved on 12/01/2016, http://www.thekitchn.com/whats-the-difference-between-masa-and-masa-harina-226434, 5 pages
/E.G./	56.	Richins et al., "Effect of Iron Source on Color and Appearance of Micronutrient-Fortified Corn Flour Tortillas," Cereal Chem., 85:561-5 (2008)
/E.G./	57.	Rochet and Chaintreau, "Carbonyl Odorants Contributing to the In-Oven Roast Beef Top Note," J. Agric. Food Chem., 53:9578-9585 (November 2005)
/E.G./	58.	Rowe, "Chemistry and technology of flavors and fragrances," Oxford:: Blackwell; 2005, 351 pages
/E.G./	59.	Schieberle et al., "Characterization of Key Odorants in Dry-Heated Cysteine-Carbohydrate Mixtures: Comparison with Aqueous Reaction Systems," Flavor Analysis, American Chemical Society, pp. 320-330 (Setpember 1998)
/E.G./	60.	Segner, "Meatless burger made possible with local effort," July 29, 2016, retrieved August 1, 2016 <http://www.southernminn.com/owatonna_peoples_press/news/article_3d414149-1040-534d-b1af-bf4f8c486788.html>, 5 pages
/E.G./	61.	Selli et al., "Odour-active and off-odour components in rainbow trout (Oncorhynchus mykiss) extracts obtained by microwave assisted distillation-solvent extraction," Food Chemistry, 114:317-322 (2009)
/E.G./	62.	Shahidi et al., "Meat flavor volatiles: A review of the composition, techniques of analysis, and sensory evaluation," CRC Critical Reviews in Food Science and Nutrition, 24(2):141-243 (January 1986)
/E.G./	63.	Shi et al., "Identification of characteristic flavour precursors from enzymatic hydrolysis-mild thermal oxidation tallow by descriptive sensory analysis and gas chromatography–olfactometry and partial least squares regression," Journal of Chromatography B, 913-914:96-76 (January 2013)
/E.G./	64.	Shu et al., "Parameter Effects on the Thermal Reaction of Cystine and 2,5-Dimethyl-4-hydroxy-3(2*H*)-furanone," Thermal Generation of Aromas, American Chemical Society, pp. 229-241 (October 1989)
/E.G./	65.	Soller, "The Impossible Burger is Ready for Its (Meatless) Close-Up," The Wall Street Journal, June 14, 2016, retrieved June 21, 2016 <http://www.wsj.com/articles/the-impossible-burger-is-ready-for-its-meatless-close-up-1465912323>, 8 pages

Examiner Signature	Date Considered
/ELIZABETH GWARTNEY/	04/11/2017

EXAMINER: Initials citation considered. Draw line through citation if not in conformance and not considered. Include copy of this form with next communication to applicant.

Substitute Disclosure Form

Receipt date: 01/12/2017

Sheet _5_ of _5_

Substitute Disclosure Form	U.S. Department of Commerce Patent and Trademark Office	Attorney Docket No. 38767-0010001	Application No. 14/796,970
Information Disclosure Statement by Applicant (Use several sheets if necessary)		Applicant Impossible Foods Inc.	
(37 CFR §1.98(b))		Filing Date July 10, 2015	Group Art Unit 1791

Other Documents (include Author, Title, Date, and Place of Publication)

Examiner Initial	Desig. ID	Document
/E.G./	66.	Song, et al., "Contribution of oxidized tallow to aroma characteristics of beeflike process flavour assessed by gas chromatography-mass spectrometry and partial least squares regression," Journal of Chromatography A, 1254:115-124 (September 2012)
/E.G./	67.	Spence et al., "Multisensory Flavor Perception," Cell 161: 24-35 (2015)
/E.G./	68.	Supplementary European Search Report for International No. EP 14737909.3, dated October 07, 2016, 10 pages
/E.G./	69.	Supplementary Partial European Search Report in European Application No. 14738061 dated November 7, 2016, 11 pages
/E.G./	70.	Swanson, "Patenting the Quest for a More Perfect Veggie Burger," JDSUPRA Business Advisor, June 21, 2016, retrieved June 23, 2016 <http://www.jdsupra.com/legalnews/patenting-the-quest-for-a-more-perfect-72212/>. 13 pages
/E.G./	71.	Tang et al., "Flavor chemistry of 2-methyl-3-furanthiol, an intense meaty aroma compound," Journal of Sulfur Chemistry, 11 pages, (2012)
/E.G./	72.	The Good Scents Company, "The Good Scents Company Information System," 2015, retrieved on December 1, 2016, http://www.thegoodscentscompany.com/, 2 pages
/E.G./	73.	Tressl et al., "Formation of Amino Acid Specific Maillard Products and Their Contribution to Thermally Generated Aromas," Thermal Generation of Aromas, American Chemical Society, pp. 156-171 (October 1989)
/E.G./	74.	Uauy et al., "Iron Fortification of Foods: Overcoming Technical and Practical Barriers," J. Nutr. 132:849S-852S (2002)
/E.G./	75.	Withycombe et al., "Identification of 2-Methyl-3-Furanthiol in the Steam Distillate from Canned Tuna Fish," Journal of Food Science, 53(2):658-660 (1988)
/E.G./	76.	Yancey et al., "Effects of total iron, myoglobin, hemoglobin, and lipid oxidation of uncooked muscles on livery flavor development and volatiles of cooked beef steaks," Meat Science, 73:680-686 (2006)
/E.G./	77.	Zhengnong et al., "Cihai biological fascicle," Shanghai Lexicographical Publishing House, P.243, December 31, 1987 (Chinese Version)

Examiner Signature /ELIZABETH GWARTNEY/	Date Considered 04/11/2017
EXAMINER: Initials citation considered. Draw line through citation if not in conformance and not considered. Include copy of this form with next communication to applicant.	

Substitute Disclosure Form

Sheet 1 of 1

Substitute Disclosure Form	U.S. Department of Commerce Patent and Trademark Office	Attorney Docket No. 38767-0010001	Application No. 14/796,970
Information Disclosure Statement by Applicant (Use several sheets if necessary)		Applicant Impossible Foods Inc.	
(37 CFR §1.98(b))		Filing Date July 10, 2015	Group Art Unit 1791

U.S. Patent Documents							
Examiner Initial	Desig. ID	Document Number	Publication Date	Patentee	Class	Subclass	Filing Date If Appropriate
	--	--	--				

Foreign Patent Documents or Published Foreign Patent Applications								
Examiner Initial	Desig. ID	Document Number	Publication Date	Country or Patent Office	Class	Subclass	Translation	
							Yes	No
	--	--	--					

Other Documents (include Author, Title, Date, and Place of Publication)		
Examiner Initial	Desig. ID	Document
/E.G./	1.	Lombardi et al., "Total Heme and Non-heme Iron in Raw and Cooked Meats," Journal of Food Science, 67(5):1738-1741 (2002)

Examiner Signature /ELIZABETH GWARTNEY/	Date Considered 04/11/2017
EXAMINER: Initials citation considered. Draw line through citation if not in conformance and not considered. Include copy of this form with next communication to applicant.	

Substitute Disclosure Form

Receipt date: 03/03/2017

Sheet 1 of 1

Substitute Disclosure Form	U.S. Department of Commerce Patent and Trademark Office	Attorney Docket No. 38767-0010001	Application No. 14/796,970
Information Disclosure Statement by Applicant (Use several sheets if necessary)		Applicant Impossible Foods Inc.	
(37 CFR §1.98(b))		Filing Date July 10, 2015	Group Art Unit 1791

U.S. Patent Documents

Examiner Initial	Desig. ID	Document Number	Publication Date	Patentee	Class	Subclass	Filing Date If Appropriate

Foreign Patent Documents or Published Foreign Patent Applications

Examiner Initial	Desig. ID	Document Number	Publication Date	Country or Patent Office	Class	Subclass	Translation Yes	Translation No

Other Documents (include Author, Title, Date, and Place of Publication)

Examiner Initial	Desig. ID	Document
/E.G./	1.	Chau, "Uncanny Patty," The Ringer, February 27, 2017, retrieved on February 28, 2017, retrieved from <https://theringer.com/impossible-burger-last-meal-on-earth-week-food-f9f14acdb99d#.vocb2hi6e>, 19 pages

Examiner Signature	Date Considered
/ELIZABETH GWARTNEY/	04/11/2017

EXAMINER: Initials citation considered. Draw line through citation if not in conformance and not considered. Include copy of this form with next communication to applicant.

Substitute Disclosure Form

Index of Claims	Application/Control No.	Applicant(s)/Patent Under Reexamination
	14796970	VRLJIC ET AL.
	Examiner	**Art Unit**
	ELIZABETH GWARTNEY	1791

✓	Rejected	-	Cancelled	N	Non-Elected	A	Appeal
=	Allowed	÷	Restricted	I	Interference	O	Objected

☐ Claims renumbered in the same order as presented by applicant ☐ CPA ☐ T.D. ☐ R.1.47

CLAIM		DATE								
Final	Original	09/10/2015	02/21/2016	07/07/2016	04/11/2017					
	1	✓	✓	✓	✓					
	2	✓	✓	✓	✓					
	3	✓	✓	✓	✓					
	4	✓	✓	✓	✓					
	5	✓	✓	✓	✓					
	6	✓	-	-	-					
	7	✓	✓	✓	✓					
	8	✓	✓	✓	✓					
	9	✓	✓	✓	✓					
	10	✓	-	-	-					
	11	✓	✓	✓	✓					
	12	✓	✓	✓	✓					
	13	✓	-	-	-					
	14	✓	-	-	-					
	15	N	-	-	-					
	16	N	-	-	-					
	17	N	-	-	-					
	18	N	-	-	-					
	19	N	-	-	-					
	20	N	-	-	-					
	21	N	-	-	-					
	22	N	-	-	-					
	23	N	-	-	-					
	24	N	-	-	-					
	25	N	-	-	-					
	26	N	-	-	-					
	27	N	-	-	-					
	28	N	-	-	-					
	29	N	-	-	-					
	30	N	-	-	-					
	31		✓	-	-					
	32		✓	✓	✓					
	33		✓	✓	✓					
	34		✓	✓	✓					
	35		✓	✓	✓					
	36		✓	✓	✓					

Index of Claims	Application/Control No.	Applicant(s)/Patent Under Reexamination
	14796970	VRLJIC ET AL.
	Examiner	**Art Unit**
	ELIZABETH GWARTNEY	1791

✓	Rejected	-	Cancelled	N	Non-Elected	A	Appeal
=	Allowed	÷	Restricted	I	Interference	O	Objected

☐ Claims renumbered in the same order as presented by applicant ☐ CPA ☐ T.D. ☐ R.1.47

CLAIM		DATE								
Final	Original	09/10/2015	02/21/2016	07/07/2016	04/11/2017					
	37		✓	✓	✓					
	38		✓	✓	✓					
	39		✓	✓	✓					
	40		✓	✓	✓					
	41		✓	✓	✓					
	42		✓	✓	✓					
	43		✓	✓	✓					
	44		✓	-	-					
	45		✓	✓	✓					
	46		✓	✓	✓					
	47			✓	✓					
	48			✓	✓					
	49			✓	✓					
	50			✓	✓					
	51			✓	✓					
	52			✓	✓					
	53				✓					
	54				✓					
	55				✓					

Search Notes	Application/Control No.	Applicant(s)/Patent Under Reexamination
	14796970	VRLJIC ET AL.
	Examiner	**Art Unit**
	ELIZABETH GWARTNEY	1791

CPC- SEARCHED

Symbol	Date	Examiner
A23L1/31427	9/10/2015	EG
A23L13/424, 426 (text limited)	4/11/2017	EG

CPC COMBINATION SETS - SEARCHED

Symbol	Date	Examiner

US CLASSIFICATION SEARCHED

Class	Subclass	Date	Examiner

SEARCH NOTES

Search Notes	Date	Examiner
PALM inventor search completed	9/9/2015	EG
EAST text search - see search history	9/9/2015	EG
Google search / Google Scholar search - beef, chicken, pork and fish stew; heme-containing proteins from bacteria/ and in general.	9/10/2015	EG
EAST text search updated - see search history	2/21/2016	EG
Google search updated -	2/21/2016	EG
EAST text search - see search history	7/7/2016	EG
Google/Google Scholar - heme protein and meat flavor, hemoglobin and meat flavor	7/7/2016	EG
Google/Google Scholar search - sugar/amino acid and maillard rxn related to meat flavor	4/10/2017	EG
A23L13/424, 426 (text limited)	4/11/2017	EG

INTERFERENCE SEARCH

US Class/ CPC Symbol	US Subclass / CPC Group	Date	Examiner

Receipt date: 01/19/2017

Sheet 1 of 1

Substitute Disclosure Form U.S. Department of Commerce Patent and Trademark Office	Attorney Docket No. 38767-0010001	Application No. 14/796,970
Information Disclosure Statement by Applicant (Use several sheets if necessary)	Applicant Impossible Foods Inc.	
(37 CFR §1.98(b))	Filing Date July 10, 2015	Group Art Unit 1791

U.S. Patent Documents

Examiner Initial	Desig. ID	Document Number	Publication Date	Patentee	Class	Subclass	Filing Date If Appropriate

Foreign Patent Documents or Published Foreign Patent Applications

Examiner Initial	Desig. ID	Document Number	Publication Date	Country or Patent Office	Class	Subclass	Translation Yes	Translation No

Other Documents (include Author, Title, Date, and Place of Publication)

Examiner Initial	Desig. ID	Document
/E.G./	1.	Cott et al., "The 'Impossible' Veggie Burger: A Tech Industry Answer to the Big Mac," Business Day, January 13, 2017, retrieved on 01/17/2017, <https://mobile.nytimes.com/2017/01/13/business/veggie-burger-impossible-burger.html?referer=http://www.drudgereport.com/>, 7 pages

Examiner Signature	Date Considered
/ELIZABETH GWARTNEY/	04/11/2017

EXAMINER: Initials citation considered. Draw line through citation if not in conformance and not considered. Include copy of this form with next communication to applicant.

Substitute Disclosure Form

Attorney Docket No.: 38767-0010001 / M2CON-Track 1

IN THE UNITED STATES PATENT AND TRADEMARK OFFICE

First Named Inventor	:	Marija Vrljic	Art Unit	:	1791
Serial No.	:	14/796,970	Examiner	:	Elizabeth A. Gwartney
Filed	:	July 10, 2015			
			Conf. No.	:	8501
Title	:	METHODS AND COMPOSITIONS FOR CONSUMABLES			

MAIL STOP RCE
Commissioner for Patents
P.O. Box 1450
Alexandria, VA 22313-1450

INFORMATION DISCLOSURE STATEMENT

Please consider the references listed on the enclosed PTO-1449 Form. Foreign patent documents and non-patent literature are enclosed; U.S. patents and patent application publications will be provided upon request. Copies of a Communication from foreign Patent Offices in counterpart application also are enclosed.

This filing is being made with the filing of a Request for Continued Examination (RCE). Therefore, no fee is required. If this is incorrect, please apply any charges, or credits, to Deposit Account No. 06-1050, referencing the above-indicated Attorney Docket Number.

Please contact the undersigned if there are any questions regarding this statement.

Respectfully submitted,

Date: /October 17, 2017/

/M. Angela Parsons/
M. Angela Parsons, Ph.D.
Reg. No. 44,282

Customer Number 26191
Fish & Richardson P.C.
Telephone: (612) 335-5070
Facsimile: (877) 769-7945

61578711.doc

Sheet 1 of 3

Substitute Disclosure Form	U.S. Department of Commerce Patent and Trademark Office	Attorney Docket No. 38767-0010001	Application No. 14/796,970
Information Disclosure Statement by Applicant (Use several sheets if necessary)		Applicant Impossible Foods Inc.	
(37 CFR §1.98(b))		Filing Date July 10, 2015	Group Art Unit 1791

U.S. Patent Documents

Examiner Initial	Desig. ID	Document Number	Publication Date	Patentee	Class	Subclass	Filing Date If Appropriate
	1.	2002/0034570	3/21/2002	Krammer et al.			
	2.	2003/0212281	11/13/2003	Sinha et al.			
	3.	2006/0204644	9/14/2006	Cavallini et al.			
	4.	2008/0254199	10/16/2008	Orcutt et al.			
	5.	2010/0196575	8/5/2010	Sanchez			
	6.	2010/0310738	12/9/2010	Ludwig			
	7.	2015/0296834	10/22/2015	Geistlinger et al.			
	8.	2015/0296835	10/22/2015	Anderson et al.			
	9.	5,597,594	1/28/1997	Matsuura et al.			

Foreign Patent Documents or Published Foreign Patent Applications

Examiner Initial	Desig. ID	Document Number	Publication Date	Country or Patent Office	Class	Subclass	Translation Yes	Translation No
	10.	CN 101156632	4/9/2008	CHINA			English Ab.	
	11.	CN 101489422	7/22/2009	CHINA			English Ab.	
	12.	CN 101861895	10/20/2010	CHINA			English Ab.	
	13.	CN 101897418	12/1/2010	CHINA			English Ab.	
	14.	CN 102440302	5/9/2012	CHINA			English Ab.	
	15.	CN 102578544	7/18/2012	CHINA			English Ab.	
	16.	CN 102835460	12/26/2012	CHINA			English Ab.	
	17.	JP S53115846	10/9/1978	JAPAN			Machine Translation	
	18.	JP H08140627	6/4/1996	JAPAN			English Ab.	
	19.	JP 2012016336	1/26/2012	JAPAN			English Ab.	
	20.	WO 2013/013292	1/31/2013	WIPO				
	21.	WO 2014/110540	7/17/2014	WIPO				
	22.	WO 2015/127388	8/27/2015	WIPO				

Examiner Signature	Date Considered
EXAMINER: Initials citation considered. Draw line through citation if not in conformance and not considered. Include copy of this form with next communication to applicant.	

Substitute Disclosure Form

Sheet _2_ of _3_

Substitute Disclosure Form	U.S. Department of Commerce Patent and Trademark Office	Attorney Docket No. 38767-0010001	Application No. 14/796,970
Information Disclosure Statement by Applicant (Use several sheets if necessary)		Applicant Impossible Foods Inc.	
(37 CFR §1.98(b))		Filing Date July 10, 2015	Group Art Unit 1791

Other Documents (include Author, Title, Date, and Place of Publication)

Examiner Initial	Desig. ID	Document
	23.	Australian Patent Examination Report No. 1 in Australian Application No. 2012281064, dated January 25, 2016, 5 pages
	24.	Australian Patent Examination Report No. 1 in Australian Application No. 2012281069, dated September 25, 2015, 5 pages
	25.	Field et al., "Heme Pigment Content of Bovine Hemopoietic Marrow and Muscle," J. Food Sci., 45:1109-1112, 1980
	26.	Griffths, "XCIII. The Action of Gastic Juice on Beef Muscle-Globulin, With References to Anaemia," Biochemistry Journal, 28:671-675 (1934)
	27.	International Preliminary Report on Patentability in International Application No. PCT/US 2012/046560, mailed 1/23/2014, 12 pages
	28.	International Preliminary Report on Patentability in International Application No. PCT/US 2012/46552, mailed 1/23/2014, 9 pages
	29.	International Preliminary Report on Patentability in International Application No. PCT/US14/11347, dated July 14, 2015, 10 pages
	30.	International Preliminary Report on Patentability in International Application No. PCT/US14/11362, dated July 23, 2015, 10 pages
	31.	International Search Report and Written Opinion in International Application No. PCT/US 2012/046560, mailed 12/14/2012, 11 pages
	32.	International Search Report and Written Opinion in International Application No. PCT/US 2012/46552, mailed 11/19/2012, 12 pages
	33.	International Search Report and Written Opinion in International Application No. PCT/US14/11347, dated July 3, 2014, 20 pages
	34.	International Search Report and Written Opinion in International Application No. PCT/US14/11362, dated June 13, 2014, 19 pages
	35.	International Search Report and Written Opinion in International Application No. PCT/US2015/017147, dated May 01, 2015, 15 pages
	36.	International Search Report and Written Opinion in International Application No. PCT/US2015/023679, dated August 28, 2015, 26 pages
	37.	Koutsidis et al., "Water-soluble precursors of beef flavor: I. Effect of diet and breed," Meat Science, 79:124-130, 2008
	38.	Naike, "Food Flavor Chemistry," 1st Edition China Light Industry Press, pages 236-243 (1996) (English Translation)
	39.	Office Action in Chinese Application No. 201480014349.9, dated July 24, 2017, 52 pages (English Translation)
	40.	Office Action in Chinese Application No. 201280041713.1, dated July 13, 2017, 28 pages (English Translation)
	41.	Office Action in Chinese Application No. 201480013778.4, dated August 08, 2017, 24 pages (English Translation)
	42.	Shimbayashi et al., "Free Amino Acids and Phsphorylethanolamine in Milk Whey of Cow" Agr. Biol. Chem, 29(1):13-19, 1965
	43.	Tong et al. ,"Blood Composition of Different Beef Breed Types" Can. J. Anim. Sci, 66:915-924 (December 1986)

Examiner Signature	Date Considered
EXAMINER: Initials citation considered. Draw line through citation if not in conformance and not considered. Include copy of this form with next communication to applicant.	

Substitute Disclosure Form

Sheet _3_ of _3_

Substitute Disclosure Form	U.S. Department of Commerce Patent and Trademark Office	Attorney Docket No. 38767-0010001	Application No. 14/796,970
Information Disclosure Statement by Applicant (Use several sheets if necessary)		Applicant Impossible Foods Inc.	
(37 CFR §1.98(b))		Filing Date July 10, 2015	Group Art Unit 1791

Other Documents (include Author, Title, Date, and Place of Publication)		
Examiner Initial	Desig. ID	Document
	44.	Xiaoling, "Practical Technology and Quality Management of Deep Processing of Meat Products," China Textile & Apparel Press, pages 9 and 10 (English Translation), 10 pages

Examiner Signature	Date Considered
EXAMINER: Initials citation considered. Draw line through citation if not in conformance and not considered. Include copy of this form with next communication to applicant.	

Substitute Disclosure Form

Espacenet

Bibliographic data: CN101156632 (A) — 2008-04-09

Processing method of remaking soybean cheese combinations

Inventor(s): RUIXIA GU [CN]; XIAOGANG XU [CN]; XU YANG [CN] ± (GU RUIXIA, ; XU XIAOGANG, ; YANG XU)

Applicant(s): UNIV YANGZHOU [CN] ± (YANGZHOU UNIVERSITY)

Classification: **- international:** ***A23C20/02; A23L11/00***
- cooperative:

Application number: CN20071134776 20071019

Priority number (s): CN20071134776 20071019

Also published as: CN101156632 (B)

Abstract of CN101156632 (A)

The invention provides a process method for remade soybean cheese products, belongs to the food processing filed, and relates to improved remade cheese made by soybean and the producing method thereof. Firstly, lactobacillus leaven is inoculated in the bean milk, and through ferment, the clabber is made into; clabber grains are obtained through compression; mucor spore liquid is inoculated, proper metal ion is added, after cultivation, sodium chloride is added in the clabber grains, and through compression, the soybean cheese is formed; the soybean cheese is positioned with 4-8 DEG C for maturing; butterine, butterfat, stabilizing salt, or flavoring are added in the soybean cheese, through thaw, concentration, compression, and figuration, the remade soybean cheese is produced.; The product has high nutrition value with low salt content, is easy to be stored, can satisfy the taste of the Chinese, and is cheap.

[19] 中华人民共和国国家知识产权局

[51] Int. Cl.
A23C 20/02 (2006.01)
A23L 1/20 (2006.01)

[12] 发明专利申请公布说明书

[21] 申请号 200710134776.2

[43] 公开日 2008 年 4 月 9 日

[11] 公开号 CN 101156632A

[22] 申请日 2007.10.19
[21] 申请号 200710134776.2
[71] 申请人 扬州大学
地址 225009 江苏省扬州市大学南路 88 号
[72] 发明人 顾瑞霞 许小刚 杨 旭
[74] 专利代理机构 扬州市锦江专利事务所
代理人 江 平

权利要求书 1 页 说明书 5 页

[54] 发明名称

再制大豆干酪制品的加工方法

[57] 摘要

再制大豆干酪制品的加工方法，属于食品加工领域，是涉及一种改良的利用大豆制备再制干酪及其制作方法。 先在豆乳中接种乳酸菌发酵剂，经发酵，制成凝乳；压榨获得凝乳粒；接种毛霉孢子液，并加入适量金属离子，经培养后，再在凝乳粒中加入氯化钠，经压榨形成大豆干酪；置于 4 ~ 8℃成熟；在大豆干酪中添加人造奶油、乳脂肪、稳定性盐或调味料，经融化、浓缩、压制、成形，制得再制大豆干酪。 产品营养价值高、易贮藏、盐含量低、符合中国人口味、廉价。

1、再制大豆干酪制品的加工方法，其特征在于包括以下步骤：

1）在豆乳中接种乳酸菌发酵剂，经发酵，制成凝乳；

2）将凝乳压榨获得凝乳粒；

3）在每 100g 大豆蛋白凝乳粒接种毛霉孢子液 2ml，置于 25～27℃条件下培养 30～45 小时；

4）再在凝乳粒中加入氯化钠，经压榨形成大豆干酪；

5）将成形的大豆干酪置于 4～8℃成熟 15～30 天；

6）在大豆干酪中添加人造奶油或乳脂肪或稳定性盐或调味料，经融化、浓缩、压制、成形，制得再制大豆干酪。

2、根据权利要求 1 所述再制大豆干酪制品的加工方法，其特征在于在豆乳中添加 0.8%～1.2%的乳清粉或 1.5～2.0%的脱脂乳粉。

3、根据权利要求 1 所述再制大豆干酪制品的加工方法，其特征在于步骤 1）中，当豆乳 pH 值为 4.55～4.62 时停止发酵。

4、根据权利要求 1 所述再制大豆干酪制品的加工方法，其特征在于步骤 2）中先将凝乳切割成小凝乳块，并加热到 50℃，保持 5～10min，然后将小凝乳块压榨，得到凝乳粒。

5、根据权利要求 1 所述再制大豆干酪制品的加工方法，其特征在于在步骤 3)中，还添加 Mg^{2+}0.8～1.2mmol·kg^{-1} 和 Ca^{2+}1.8～2.2mmol·kg^{-1} 和 Mn^{2+}0.8～1.2mmol·kg^{-1}。

6、根据权利要求 1 所述再制大豆干酪制品的加工方法，其特征在于在步骤 3）中，接种毛霉孢子液时凝乳粒酸度为 0.8%～1.1%。

7、根据权利要求 1 所述再制大豆干酪制品的加工方法，其特征在于在步骤 4）中，在每 100g 大豆蛋白凝乳粒加入氯化钠 0.5g。

8、根据权利要求 1 所述再制大豆干酪制品的加工方法，其特征在于在步骤 6）中，融化温度为 105～140℃。

再制大豆干酪制品的加工方法

技术领域

本发明属于食品加工领域，是涉及一种改良的利用大豆制备再制干酪及其制作方法。

技术背景

干酪是一种古老的乳制品，具有悠久的生产历史，含有丰富的蛋白质、脂肪、各种氨基酸，还含有糖类、有机酸、微量元素和矿物质。干酪中的蛋白质在发酵过程中，经过凝乳酶和微生物蛋白酶的作用，逐步被分解为肽、胨、氨基酸及其它小分子物质，这些小分子物质更容易被人体消化吸收，从而使干酪中的蛋白质的消化率达到 96%～98%。所以日常生活中增加干酪的摄取，对增强体质、保持健康极为有利。

目前国内干酪的生产量十分有限，仅有为数不多企业生产干酪产品，如光明已生产出“光明”系列干酪，法国独资的保健然（天津）公司已推出“百吉福”干酪等，市面上其余大多产品为进口品牌，且占据绝大部分的市场份额。目前我国干酪年需求总量仅为 5000～6000t 左右，人均不到 5g，与世界上的乳品消费大国相比有很大的差距。究其原因，一方面是由于现在人们能购买到的干酪大部分是进口产品，价格较高，不属于生活必须品的范畴；另一方面，我国人口大都集中在产粮地区，没有长期食用乳制品的习惯，国人很难接受干酪独特的口味。基于上述原因，国内的乳品工作者参考欧美等国家的先进生产技术，针对中国的市场需求和消费者的嗜好，进行了调整干酪风味和干酪品种开发的研究，以弥补上述空白。

大豆富含蛋白质，不仅具备人体必需氨基酸、维生素，而且不含胆固醇，对动脉硬化、脑溢血、心脏病、肥胖症等有疗效作用。研究表明，人们进食动物性食品过多，是造成导致心血管病、脑血管病、肥胖症、糖尿病等所谓“文明病”增加的原因之一，营养学家认为，增加植物性蛋白，特别是大豆

蛋白的食用量，是解决这一问题的一条行之有效的途径。此外大豆蛋白还能解除因重金属盐、生物碱等引起的中毒、降低血液中的低密度脂蛋白、减少身体内钙的损失等重要生理功能。

干酪是欧美人民喜食的食品之一。其生产量较大，而我国的腐乳有“东方干酪”之美称。但由于普通牛奶干酪牛奶消耗较大，价格高。在我国一直未能得到推广。而腐乳由于盐分含量高，仅作为佐餐食品。

由此可见利用大豆开发生产大豆干酪可以满足我国国情的要求。首先，大豆是我国的传统食品原料之一，营养丰富，来源广，产量大，成本低，利用大豆生产大豆干酪原料充裕，且具有成本优势；其二， 大豆食品是我国的传统食品，国人对其早已适应，且有一定嗜好，所以，利用大豆生产的大豆干酪的风味会比较容易被国人接受。

发明内容

本发明的目的是发明一种可廉价、低成本生产的再制大豆干酪制品的加工方法。

本发明包括以下步骤：

1）在豆乳中接种乳酸菌发酵剂，经发酵，制成凝乳；

2）将凝乳压榨获得凝乳粒；

3）在每 100g 大豆蛋白凝乳粒接种毛霉孢子液 2mL，并加入适量金属离子，置于 25～27℃条件下培养 30～45 小时；

4）再在凝乳粒中加入氯化钠，经压榨形成大豆干酪；

5）将成形的大豆干酪置于 4～8℃成熟 15～30 天；

6）在大豆干酪中添加人造奶油、乳脂肪、稳定性盐或调味料，经融化、浓缩、压制、成形，制得再制大豆干酪。

本发明以豆乳为原料，加工方法主要利用乳酸菌发酵豆乳凝乳后，利用霉菌产生的蛋白酶对大分子蛋白进行适度水解，提高其营养价值和贮藏特性，并改善质地和风味后，经加入辅料经融化后而制成的再制大豆干酪产品。经本发明生产方法制成的再制大豆干酪低盐含量、营养丰富、符合中国人口味。

Case No.: IPR2023-00208
U.S. Patent No. 10,039,306

更主要的是其生产成本低，为实现廉价销售打下良好的基础。

本发明生产特点主要体现在：

1、利用乳酸菌凝乳，替代普通干酪生产用酶法凝乳，可降低生产成本。

2、不用腐乳生产中的凝固剂（如葡糖酸-δ-内酯）凝乳，而用乳酸菌发酵凝乳，可提高加工产品的营养价值和贮藏特性。

3、利用毛霉孢子液发酵凝乳粒，以提高加工产品的营养价值。

4、利用毛霉孢子液发酵及其分泌的蛋白酶成熟，可缩短干酪的成熟时间。

5、经压榨后的凝乳块的理化成分可控制在脂肪 15%～17%，蛋白质 18%～22%，总固形物在 40%～45%。

6、将成熟后的干酪添加人造奶油、乳脂肪、稳定性盐、调味料等，可提高再制大豆干酪制品的营养价值和口感。

因豆乳中不含乳酸菌生长所需的乳糖，为了促进乳酸菌的凝乳速度和效果，本发明还在大豆豆乳中添加 0.8%～1.2%的乳清粉或 1.6%～2%的脱脂乳粉。

为了使大豆蛋白充分凝固，使凝乳过程中蛋白质得到最大化保留，步骤 1）中，当豆乳 pH 值为 4.55～4.62 时停止发酵。

为彻底排出乳清，步骤 2）中先将凝乳切割成小凝乳块，并加热到 50℃，保持 5～10min，然后将小凝乳块压榨，得到大豆蛋白凝乳粒。

为了促进霉菌的生长和蛋白酶的分泌，在凝乳粒中添加 Mg^{2+}0.001mol·kg^{-1} 和 Ca^{2+}0.002mol·kg^{-1} 和 Mn^{2+}0.001mol·kg^{-1}。

控制接种毛霉孢子液时凝乳粒酸度为 0.8%～1.1%。目的是：使毛霉在凝乳粒生长过程中，更适于毛霉的生长与蛋白酶的产生，且蛋白酶活力最高，并控制腐败微生物的生长。

在每 100g 大豆蛋白凝乳粒中加入 0.5g 氯化钠进行压榨形成大豆干酪。可赋予制品良好口感，并具有抑制杂菌生长的作用。

将成熟的大豆干酪加入人造奶油、乳脂肪、稳定性盐及调味料后于 105～140℃下融化成型制得再制大豆干酪。选择合适的融化温度，可使大豆干酪充

Motif Exhibit 1148, Page 2163 of 3341

Case No.: IPR2023-00208
U.S. Patent No. 10,039,306

分融化，与辅料更好的融合，并达到进一步杀菌的目的。

具体实施方式

实施例 1

1、将大豆置于 100℃的烘箱中烘 20 分钟后，于三倍体积的 1%的 $NaHCO_3$ 溶液中浸泡 12 小时。将浸泡好的大豆洗净后以豆水重量比 1:7 的比例混合磨浆得到豆乳。

在 100kg 豆乳中加入 0.8～1.2kg 乳清粉或 1.6～2kg 脱脂乳粉。

将豆乳在 100℃杀菌 20 分钟。

2、待豆乳冷却到 40℃时，再在豆乳中加入 2～5kg 乳酸菌发酵剂（如：德氏乳杆菌保加利亚亚种和嗜热链球菌混合发酵剂），于 42℃发酵。经 2.3～3.5h，当豆乳 pH 为 4.55～4.62 时停止发酵。

3、将大豆凝乳切割成小凝乳块，加热到 50℃，保持 5～10min，促使其排出乳清，然后将得到的小凝乳块进行压榨以进一步排出乳清，得到大豆蛋白凝乳粒。

4、于每 100kg 大豆蛋白凝乳粒中接种毛霉孢子液 2 升。将凝乳粒置于 25～27℃条件下培养 30～45 小时。

5、取出发酵好的凝乳粒加入 0.5 kg NaCl，搅拌均匀后进行压榨，得到大豆干酪。将压榨好的大豆干酪放置于 4℃成熟 20 天。

6、加入 200 kg 水和 2.1 kg 柠檬酸钠，然后倒入经切割的干酪、人造奶油，然后加热至 105～140℃，搅拌，待干酪和奶油完全融化后，再徐徐加入奶粉以及其他配料，融化后的物料经胶体磨处理，将处理好的物料进行浓缩，加入柠檬酸，再经压制、成形，然后趁热无菌灌装。

实施例 2

1、按实施例 1 的方法所获得的灭好菌的豆乳。

2、将豆乳冷却到 40℃左右，加入 1%的乳清粉和 3%的乳酸菌发酵剂，在 42℃培养箱中发酵 3 小时，得到大豆凝乳。

3、将大豆凝乳划成小凝乳块，水浴加热到 50℃以促进豆乳凝乳中的乳

Motif Exhibit 1148, Page 2164 of 3341

清排除。将得到的小凝乳块进一步压榨得到大豆凝乳粒。

4、在大豆凝乳粒中添加 Mg^{2+}0.001mol·kg^{-1}、Ca^{2+}0.002mol·kg^{-1}、Mn^{2+}0.001mol·kg^{-1}。

可以添加的 Mg^{2+}可以是 $MgSO_4$ 或 $MgCl_2$；可以添加的 Ca^{2+}可以是 $CaCl_2$ 或 $CaCO_3$；可以添加的 Mn^{2+}可以是 $MnSO_4$。

然后于每 100Kg 大豆蛋白凝乳粒中接种毛霉孢子液 2L。将凝乳粒置于 26℃培养箱培养 36 小时。

5、取出发酵好的凝乳粒加入 0.5 kg NaCl，搅拌均匀后进行压榨，得到大豆干酪。将压榨好的大豆干酪放置于 4℃成熟 20 天。

6、加入 200 kg 水和 2.1 kg 柠檬酸钠，然后倒入经切割的干酪、奶油，然后加热至 140℃，搅拌，待干酪和奶油完全融化后，再徐徐加入奶粉以及其他配料（如食盐），融化后的物料经胶体磨处理，将处理好的物料进行浓缩，加入柠檬酸，再经压制、成形，趁热无菌灌装。

实施例 3

将用类似于实施例 2 的方法所获得的大豆凝乳粒，然后按 Mg^{2+}0.001 mol·kg^{-1}、Ca^{2+}0.002 mol·kg^{-1}、Mn^{2+}0.001mol·kg^{-1} 的比例加入 Mg^{2+}、Ca^{2+}和 Mn^{2+}，再按 2%的量接种毛霉孢子液。将凝乳粒置 26℃培养箱培养 36 小时，取出发酵好的凝乳粒加入 0.5%NaCl，搅拌均匀后进行压榨，得到大豆干酪。将压榨好的大豆干酪放置于 4℃成熟 20 天。

将成熟好的大豆干酪切碎，取 50kg 大豆干酪和 16kg 奶油，3kg 明胶，10kg 脱脂奶粉，1.6kg 柠檬酸钠，0.8kg 磷酸氢二钠，3kg 食盐，1kg 蔗糖以及 10kg 胡萝卜汁于融化锅中，加热至 110℃使其融化。将融化好的物料经胶体磨处理，使其乳化。将乳化好的物料进行浓缩，在接近浓缩终点时加入 0.3kg 的柠檬酸，趁热灌装。如此得到风味及口感另人满意的再制大豆干酪。

Espacenet

Bibliographic data: CN101489422 (A) — 2009-07-22

A protein composition and its use in restructured meat and food products

Inventor(s): EDUARDO GODINEZ [US]; IZUMI MUELLER [US]; MAC ORCUTT [US] ± (GODINEZ EDUARDO, ; MUELLER IZUMI, ; ORCUTT MAC, ; ALTEMUELLER PATRICA A, ; MCMINDES MATTHEW K)

Applicant(s): SOLAE LLC [US] ± (SOLAE LLC, ; SOLAE, LLC)

Classification: - **international:** *A23L1/317*
- **cooperative:** A23J3/16; A23J3/18; A23J3/227; A23L13/426; A23L13/52; A23L13/67; A23L19/09; A23P30/20

Application number: CN2007827323 20070521

Priority number (s): WO2007US69157 20070521 ; US20060437164 20060519 ; US20070749540 20070516

Also published as: CN101489422 (B) AT490690 (T) BRPI0711209 (A2) CA2652380 (A1) CA2652380 (C) more

Abstract of CN101489422 (A)

The invention provides protein compositions containing structured protein products having protein fibers that are substantially aligned.

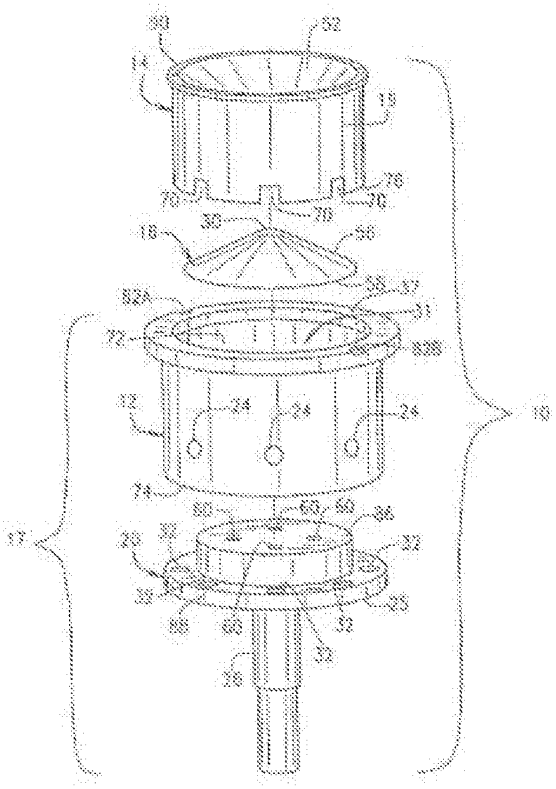

[19] 中华人民共和国国家知识产权局

[51] Int. Cl.
A23L 1/317 (2006.01)
A23J 3/26 (2006.01)
A23J 3/14 (2006.01)

[12] 发明专利申请公布说明书

[21] 申请号 200780027323.8

[43] 公开日 2009 年 7 月 22 日

[11] 公开号 CN 101489422A

[22] 申请日 2007.5.21
[21] 申请号 200780027323.8
[30] 优先权
[32] 2006. 5.19 [33] US [31] 11/437,164
[32] 2007. 5.16 [33] US [31] 11/749,540
[86] 国际申请 PCT/US2007/069157 2007.5.21
[87] 国际公布 WO2007/137125 英 2007.11.29
[85] 进入国家阶段日期 2009.1.19
[71] 申请人 索莱有限责任公司
地址 美国密苏里州
[72] 发明人 M·K·麦克明德斯 E·戈迪尼茨
I·米勒 M·奥尔库特
P·A·阿尔特米勒
[74] 专利代理机构 中国专利代理(香港)有限公司
代理人 刘 冬 付 磊

权利要求书 5 页 说明书 48 页 附图 5 页

[54] 发明名称

蛋白组合物及其在重组肉制品和食品中的用途

[57] 摘要

本发明提供包含具有基本上对齐的蛋白纤维的结构化蛋白质制品的蛋白质组合物。

1. 用于制备重组肉组合物的方法，所述方法包括：通过压模装置在提高的温度和压力的条件下挤出植物蛋白材料，以形成具有基本上对齐的蛋白纤维的结构化植物蛋白制品。

2. 权利要求 1 的方法，其中所述压模装置包含：

a 模套，所述模套具有共同确定内室的后面部分和前面部分；

b 模具插入物，所述模具插入物被置于所述内室内，所述模具插入物包括具有前表面和后表面的插入体，所述前表面确定底下部份和具有渐缩流动通道的多个分流器，所述渐缩流动通道被确定在底下部份与多个分流器中的任何两个邻近分流器之间；和

c 模具锥体，所述模具锥体与所述模套配对，其中所述模具锥体和所述流动通道共同确定全渐缩的流动槽。

3. 权利要求 2 的方法，其中所述渐缩的流动通道沿三个侧面渐缩。

4. 权利要求 3 的方法，其中所述全渐缩的流动通道沿四个侧面渐缩。

5. 权利要求 4 的方法，其中所述全渐缩的流动槽在一端与入口和在其另一端与出口相通。

6. 权利要求 5 的方法，其中所述全渐缩的流动槽是从所述入口至所述出口的向内渐缩。

7. 权利要求 6 的方法，所述方法还包括使所述结构化植物蛋白制品与动物肉组合。

8. 权利要求 6 的方法，其中所述结构化植物蛋白制品具有至少 2000 克的平均剪切强度和至少 17%的平均碎片特征。

9. 权利要求 8 的方法，其中所述结构化植物蛋白制品包含以图 1 的显微照相图像所描绘的方式基本上对齐的蛋白纤维。

10. 权利要求 1 的方法，其中所述植物蛋白材料选自：荚果、玉

米、豌豆、油菜、向日葵、高粱、水稻、苋菜、马铃薯、木薯粉、竹芋、油菜籽、羽扇豆、芸蓝、小麦、燕麦、黑麦、大麦及其混合物。

11. 权利要求 1 的方法，所述方法还包括在挤出之前使至少一种动物蛋白材料与所述植物蛋白材料组合，以产生包含基本上对齐的蛋白纤维的结构化植物蛋白制品。

12. 权利要求 11 的方法，其中所述动物蛋白材料选自：酪蛋白、酪蛋白酸盐、乳清蛋白、卵清蛋白、卵球蛋白、卵粘蛋白、卵类粘蛋白、卵运铁蛋白、ovovitella、卵黄磷蛋白、清蛋白球蛋白、和卵黄磷蛋白。

13. 权利要求 1 的方法，其中所述植物蛋白材料包括大豆蛋白和小麦蛋白。

14. 权利要求 13 的方法，所述植物蛋白材料还包括乳清蛋白。

15. 权利要求 13 的方法，其中以干物质计，所述植物蛋白材料具有约 40% - 约 75%的蛋白质。

16. 权利要求 15 的方法，其中所述植物蛋白材料包含蛋白质、淀粉、面筋、和纤维。

17. 权利要求 16 的方法，其中所述植物蛋白材料包含:

a 以干物质计，约 45% - 约 65%的大豆蛋白;

b 以干物质计，约 20% - 约 30%的小麦面筋;

c 以干物质计，约 10% - 约 15%的小麦淀粉；和

d 以干物质计，约 1% - 约 5%的纤维。

18. 权利要求 16 的方法，其中所述植物蛋白材料还包含磷酸二钙和 L-半胱氨酸。

19. 权利要求 1 的方法，其中所述挤出温度为约 90°C - 约 150°C 而压力为约 500 psig - 约 1500 psig。

20. 权利要求 7 的方法，其中所述动物肉选自完整肌肉块、碎肉、机械去骨的肉、及它们的组合。

21. 权利要求 7 的方法，其中所述动物肉得自选自以下的动物:

猪、牛、羔羊、家禽、狩猎动物、和鱼。

22. 权利要求 1 的方法，其中所述重组肉组合物还包括一定量的水。

23. 权利要求 6 的方法，所述方法还包括使结构化植物蛋白制品与碎蔬菜组合。

24. 权利要求 6 的方法，所述方法还包括使结构化植物蛋白制品与碎水果组合。

25. 重组肉组合物，所述组合物包含具有基本上对齐的蛋白纤维的结构化蛋白质制品。

26. 权利要求 25 的重组肉组合物，所述组合物还包含动物肉。

27. 权利要求 26 的重组肉组合物，其中所述组合物包含约 40% - 约 60%重量的结构化蛋白质制品，和约 40% - 约 60%重量的肉。

28. 权利要求 27 的重组肉组合物，所述组合物还包含以组合物的重量计，约 10% - 约 20%的脂肪源。

29. 权利要求 28 的重组肉组合物，其中所述结构化蛋白质制品包含以图 1 的显微照相图像所描绘的方式基本上对齐的蛋白纤维。

30. 权利要求 28 的重组肉组合物，其中所述结构化蛋白质制品包含大豆蛋白、淀粉、面筋、和纤维。

31. 权利要求 28 的重组肉组合物，其中所述结构化蛋白质制品包含:

a 以干物质计，约 45% - 约 65%的大豆蛋白;

b 以干物质计，约 20% - 约 30%的小麦面筋;

c 以干物质计，约 10% - 约 15%的小麦淀粉;

d 以干物质计，约 1% - 约 5%的纤维。

32. 权利要求 30 的重组肉组合物，其中所述肉选自牛肉、猪肉、羔羊肉、火鸡肉、和鸡肉。

33. 权利要求 29 的重组肉组合物，所述重组肉组合物还包含着色组合物。

34. 权利要求 33 的重组肉组合物，其中所述着色组合物包含甜菜、胭脂红、焦糖着色剂、和氨基酸源。

35. 权利要求 34 的重组肉组合物，所述重组肉组合物还包含经分离的大豆蛋白。

36. 权利要求 35 的重组肉组合物，所述重组肉组合物还包含抗氧化剂、水、调料和食用香料。

37. 权利要求 25 的重组肉组合物，所述重组肉组合物还包含碎蔬菜。

38. 权利要求 37 的重组肉组合物，其中所述组合物包含约 40%－约 60%重量的结构化蛋白质制品，和约 40%－约 60%重量的碎蔬菜。

39. 权利要求 38 的重组肉组合物，其中所述结构化蛋白质制品包含以图 1 的显微照相图像所描绘的方式基本上对齐的蛋白纤维。

40. 权利要求 38 的重组肉组合物，其中所述结构化蛋白质制品包含大豆蛋白、淀粉、面筋、和纤维。

41. 权利要求 38 的重组肉组合物，其中所述结构化蛋白质制品包含:

a 以干物质计，约 45%－约 65%的大豆蛋白;

b 以干物质计，约 20%－约 30%的小麦面筋;

c 以干物质计，约 10%－约 15%的小麦淀粉;

d 以干物质计，约 1%－约 5%的纤维。

42. 权利要求 40 的重组肉组合物，其中所述着色组合物包含甜菜、胭脂红、焦糖着色剂、和氨基酸源。

43. 权利要求 42 的重组肉组合物，所述重组肉组合物还包含经分离的大豆蛋白。

44. 权利要求 43 的重组肉组合物，所述重组肉组合物还包含抗氧化剂、水、调料和食用香料。

45. 权利要求 25 的重组肉组合物，所述重组肉组合物还包含碎水果。

46. 权利要求 45 的重组肉组合物，其中所述组合物包含约 40% - 约 60%重量的结构化蛋白质制品，和约 40% - 约 60%重量的碎水果。

47. 权利要求 46 的重组肉组合物，其中所述结构化蛋白质制品包含以图 1 的显微照相图像所描绘的方式基本上对齐的蛋白纤维。

48. 权利要求 46 的重组肉组合物，其中所述结构化蛋白质制品包含大豆蛋白、淀粉、面筋、和纤维。

49. 权利要求 46 的重组肉组合物，其中所述结构化蛋白质制品包含:

a 以干物质计，约 45% - 约 65%的大豆蛋白;

b 以干物质计，约 20% - 约 30%的小麦面筋;

c 以干物质计，约 10% - 约 15%的小麦淀粉;

d 以干物质计，约 1% - 约 5%的纤维。

50. 权利要求 48 的重组肉组合物，其中所述着色组合物包含甜菜、胭脂红、焦糖着色剂、和氨基酸源。

51. 权利要求 50 的重组肉组合物，所述重组肉组合物还包含大豆分离蛋白。

52. 权利要求 51 的重组肉组合物，所述重组肉组合物还包含抗氧化剂、水、调料和食用香料。

53. 权利要求 25 的重组肉组合物，其中所述结构化蛋白质制品通过压模装置挤出，致使结构化蛋白质制品具有基本上对齐的蛋白纤维。

54. 权利要求 37 的重组肉组合物，其中所述结构化蛋白质制品通过压模装置挤出，致使结构化蛋白质制品具有基本上对齐的蛋白纤维。

55. 权利要求 45 的重组肉组合物，其中所述结构化蛋白质制品通过压模装置挤出，致使结构化蛋白质制品具有基本上对齐的蛋白纤维。

蛋白组合物及其在重组肉制品和食品中的用途

相关申请的交叉引用

[0001] 这是2006年5月19日提交的美国专利申请序号11/437,164的部分继续专利申请。

发明领域

[0002] 本发明提供蛋白组合物和蛋白质组合物在蔬菜制品、水果制品、和在重组肉制品中的用途。本发明还提供用于制备水合的和切碎的(shredded)蛋白质组合物的方法。

发明背景

[0003] 本发明的重要方面是非结构化蛋白质制品开发成结构化蛋白质制品。详细地讲，在一个实施方案中，本发明提供了制品和方法，其用于赋予非结构化蛋白质制品看不见的颗粒(grain)或质构(texture)并将非结构化蛋白质制品转换成具有与熟肌肉一致的明确形状的结构化蛋白质制品。

[0004] 术语"结构"描述食品的广泛多样的物理性质。产物的可接受结构通常与产物的品质同义。结构已被定义为"由物理性质的组合而引起的并通过触觉包括运动觉和口感、视觉、和听觉而感觉的物质属性"。结构，如International Organization of Standardization所定义的，是"可藉机械的、触觉的和，假如合适的话，视觉的和听觉的感受器而感觉的食品的所有流变学和结构(几何学和表面)属性"。以下术语已用于描述归入"结构"范围的制品特征:

表 I

食物结构形容词的简要列表

粘性的	肉质的	糊状的	柔软的
有弹力的	蓬松的	油滑的	湿润的
脆性的	泡沫状的	糊状的	冒气的(Sparkly)
起泡的	易碎的	塑性的	易裂的
耐嚼的	充实的	多孔的	海棉状的
粘着的	胶粘的	粉状的	多筋的
包衣的	粒状的	膨胀的	胶粘的
粘合的	砂样的	果肉状的	纤维质的
乳脂状的	树胶状的	味浓的	糖浆状的
松脆的	硬的	粗糙的	温和的
易碎的	重的	如橡皮般的	稠的
硬皮的	异类的	松软的	淡的
浓厚的	多汁的	沙质的	缠结的
柔软的	瘦的	不规则的	坚韧的
干的	清淡的	短的	均匀的
弹性的	柔软的	丝状的	粘稠的
脂肪状的	充满块状物的	滑的	水样的
牢固的	湿润的	如银的	蜡状的
片状的	涂嘴的	光滑的	蠕动的

[0005] 人们已经加速对结构的关注，因为结构属于较新的食品内容(substance)，其包括制品和仿制品、成形的肉制品和鱼制品，其中通过加工以复制原始食品或其它天然食品物质的性质而作出非常大的努力。非传统的原料、合成的食用香料、填充剂、伸张剂(stretchers)、膨胀剂的使用均趋向于改变成品的某些质构特征。通常，质构性质的仿制比复制味道、气味、和颜色更具难度。多种操作方法包括挤出结

构化已被开发以模拟天然结构性质。一般发现这些方法为了促进提早的市场接受而谨慎将原始物质的性质复制至技术上和经济上可行的程度。当结构具有与外观有关的属性时，它也具有与触觉有关的属性，并当它与口接触时也具有食物的口感或相互作用。通常，这些涉及咀嚼的感觉可以与期望的或不期望的观感有关。

[0006] 因此，结构术语包括与材料在应力或应变下的行为有关的术语，并包括，例如，以下的：牢固的、硬的、软的、韧的、温和的、耐嚼的、如橡皮的、弹性的、塑性的、粘性的、粘着的、发粘的、易碎的、发嘎吱嘎吱声的、等。第二，结构术语可与材料的结构有关：光滑的、精细的、粉状的、如白垩般的、充满块状物的、碎粉状的、粗糙的、砂样的、等。第三，结构术语可与结构元素的形状和排列有关，例如：片状的、纤维状的、多筋的、果肉状的、蜂窝状的、晶状的、玻璃状的、海棉状的、等。最后，结构术语可与口感特征有关，包括：口感、形体、干的、湿润的、湿的、水样的、蜡状的、粘糊糊的、糊状的、等。

[0007] 当用于本文时，"非结构化的"和"结构化的"描述如表 II 所述的食品特征：

Case No.: IPR2023-00208
U.S. Patent No. 10,039,306

表 II

	非结构化特征	结构化特征
在应力或应变下材料的行为	粘性的 胶粘的 塑性的	牢固的 耐嚼的
材料的结构	光滑的	粗糙的
结构元素的形状和排列	凝胶状的 果肉状的 糊状的	纤维状的 硬皮的
口感 糊状的 形体	乳脂状的 干的	湿润的

发明概述

[0008] 本发明的一个方面提供用于制备重组肉组合物的方法。该方法一般包括：通过压模装置在提高的温度和压力条件下挤出植物蛋白材料，以形成具有基本上对齐的(aligned)蛋白纤维的结构化植物蛋白制品。

[0009] 本发明的另一个方面提供重组肉组合物。该重组肉组合物包含具有基本上对齐的蛋白纤维的结构化蛋白质制品。

附图说明

[0010] 图 1 描绘显微照相的摄影图像，该图像显示本发明的具有基本上对齐的蛋白纤维的结构化植物蛋白制品。

Motif Exhibit 1148, Page 2177 of 3341

[0011] 图 2 描绘显微照相的摄影图像，该图像显示不是由本发明的方法生产的植物蛋白制品。如本文所述，包含植物蛋白制品的蛋白纤维画有阴影交叉线。

[0012] 图 3 描绘外围压模装置的透视图，该压模装置可用于含材料的蛋白质的挤出方法。

[0013] 图 4 描绘图 3 的外围压模装置的分解图，该分解图显示模具插入物(die insert)、模套(die sleeve)和模具锥体(die cone)。

[0014] 图 5 描绘沿图 3 的线 9-9 的横截面图，该横截面面图显示被模套、模具插入物、和模具锥体排列之间确定的流动槽。

[0015] 图 5A 描绘图 5 的放大的横断面图，该横断面图显示流动通路与模套出口之间的界面。

发明详述

[0016] 本发明提供水合的和切碎的蛋白质组合物和用于生产每一组合物的方法。典型地，该蛋白质组合物包含动物肉和具有基本上对齐的蛋白纤维的结构化蛋白质制品。备选地，该蛋白质组合物包含碎蔬菜或碎水果和具有基本上对齐的蛋白纤维的结构化蛋白质制品。

(I) 结构化蛋白质制品

[0017] 本发明的蛋白质组合物各包含具有基本上对齐的蛋白纤维的结构化蛋白质制品，如下面I(e)中更详细描述。在例示性实施方案中，该结构化蛋白质制品为已经受在以下I(d)中详述的挤出方法的蛋白质材料的挤出物。因为该结构化蛋白质制品以类似于动物肉的方式具有基本上对齐的蛋白纤维，所以本发明的蛋白质组合物一般具有100%动物肉组成的组合物的质构和食用品质特征。

(a) 含蛋白质的材料

[0018] 可在热塑挤出方法中使用包含蛋白质的各种成分以生产适用于本文的蛋白质组合物的结构化蛋白质制品。虽然通常使用包含得自

植物的蛋白质的成分，但也考虑在没有背离本发明领域前提下，利用得自其它源例如动物源的蛋白质。例如，选自酪蛋白、酪蛋白酸盐、乳清蛋白及其混合物的乳酪蛋白可被使用。在例示性实施方案中，该乳酪蛋白(dairy protein)为乳清蛋白。通过另一实施例，可使用选自卵清蛋白、卵球蛋白、卵粘蛋白、卵类粘蛋白、卵运铁蛋白、ovovitella、卵黄磷蛋白(ovovitellin)、清蛋白球蛋白和卵黄磷蛋白(vitellin)的卵蛋白。此外，可包括由胶原、血、器官肉、器官肉(organ meat)、机械分离的肉、部分脱脂的组织和血清蛋白质组成的肉蛋白质或蛋白质成分，作为结构化蛋白质制品的一种或多种成分。

[0019] 所考虑的是，可使用除蛋白质之外的其它成分类型。这样的成分的非限制性实施例包括糖、淀粉、寡糖、大豆纤维和其它膳食纤维。

[0020] 还考虑的是，包含蛋白质的材料可不含面筋。因为面筋通常用于挤出过程期间的纤丝形成，如果使用不含面筋的原材料，可使用食用交联剂以促进纤丝形成。合适的交联剂的非限制性实施例包括Konjac葡甘露聚糖(KGM)面粉、β 1,3葡聚糖(由Takeda-Kirin Foods生产的Pureglucan™或Curdlan)、转谷氨酰胺酶、钙盐和镁盐。即便在不含面筋的实施方案中需要，本领域技术人员可容易地确定必需的交联材料的量。

[0021] 不管其来源或成分分类，在挤出过程中使用的成分通常能够形成具有基本上对齐的蛋白纤维的挤出物。在下面更充分地详述这样的成分的合适的实例。

(i) 植物蛋白材料

[0022] 在例示性实施方案中，将使用至少一种得自植物的成分以形成包含蛋白质的材料。一般而言，该成分包含蛋白质。存在于所使用成分中的蛋白质的量可以和将会根据应用而改变。例如，存在于所使用成分中的蛋白质的量可为约40%－约100%重量。在另一实施方案中，存在于所使用成分中的蛋白质的量可为约50%－约100%重量。在另一

实施方案中，存在于所使用成分中的蛋白质的量可为约60%－约100%重量。在又一实施方案中，存在于所使用成分中的蛋白质的量可为约70%－约100%重量。在再一实施方案中，存在于所使用成分中的蛋白质的量可为约80%－约100%重量。在再一实施方案中，存在于所使用成分中的蛋白质的量可为约90%－约100%重量。

[0023] 在挤出物中使用的成分可源自各种合适的植物。通过非限制性实施例，合适的植物包括莫果、玉米、豌豆、油菜、向日葵、高粱、水稻、苋菜、马铃薯、木薯粉、竹芋、油菜籽(canola)、羽扇豆、芸蓝、小麦、燕麦、黑麦、大麦及其混合物。

[0024] 在一个实施方案中，从小麦和大豆中分离该成分。在另一例示性实施方案中，从大豆中分离该成分。合适的得自小麦的包含蛋白质的成分包括小麦面筋、小麦粉及其混合物。可用于本发明的市售小麦面筋的实例包括Gem of the Star Gluten、Vital Wheat Gluten (organic)，每一种都可得自Manildra Milling。合适的得自大豆的包含蛋白质的成分("大豆蛋白材料")包括大豆分离蛋白、大豆浓缩蛋白、大豆粉及其混合物，每一种都在下面详述。合适的得自玉米的包含蛋白质的成分包括玉米面筋粉，例如，玉米醇溶蛋白。在每一个上述实施方案中，大豆材料可与选自淀粉、面粉、面筋、膳食纤维及其混合物中的一种或多种成分结合。

[0025] 在表III中详述分离自各种来源的含蛋白材料的合适实例，其显示各种组合物。

表 III 蛋白质组合物

第一蛋白源	第二成分
大豆	肉
大豆	乳
大豆	蛋
大豆	玉米
大豆	水稻

大豆	大麦
大豆	高粱
大豆	燕麦
大豆	粟
大豆	黑麦
大豆	黑小麦
大豆	荞麦
大豆	豌豆
大豆	花生
大豆	兵豆
大豆	羽扇豆
大豆	Channa (garbonzo)
大豆	油菜籽(canola)
大豆	木薯
大豆	向日葵
大豆	乳清
大豆	木薯粉
大豆	竹芋
大豆	苋菜
大豆	小麦和乳
大豆	小麦和蛋
大豆	小麦和玉米
大豆	小麦和水稻
大豆	小麦和大麦
大豆	小麦和高粱
大豆	小麦和燕麦
大豆	小麦和粟

大豆	小麦和黑麦
大豆	小麦和黑小麦
大豆	小麦和荞麦
大豆	小麦和豌豆
大豆	小麦和花生
大豆	小麦和兵豆
大豆	小麦和羽扇豆
大豆	小麦和 Channa (garbonzo)
大豆	小麦和油菜籽(canola)
大豆	小麦和木薯
大豆	小麦和向日葵
大豆	小麦和马铃薯
大豆	小麦和木薯粉
大豆	小麦和竹芋
大豆	小麦和苋菜
大豆	玉米和小麦
大豆	玉米和乳
大豆	玉米和蛋
大豆	玉米和水稻
大豆	玉米和大麦
大豆	玉米和高粱
大豆	玉米和燕麦
大豆	玉米和粟
大豆	玉米和黑麦
大豆	玉米和黑小麦
大豆	玉米和荞麦
大豆	玉米和豌豆

大豆	玉米和花生
大豆	玉米和兵豆
大豆	玉米和羽扇豆
大豆	玉米和 Channa (garbonzo)
大豆	玉米和油菜籽(canola)
大豆	玉米和木薯
大豆	玉米和向日葵
大豆	玉米和马铃薯
大豆	玉米和木薯粉
大豆	玉米和竹芋
大豆	玉米和苋菜

[0026] 在表III描述的每一个实施方案中，含蛋白质材料的组合物可与选自淀粉、面粉、面筋、膳食纤维及其混合物的一种或多种成分组合。在一个实施方案中，该含蛋白质材料包含蛋白质、淀粉、面筋、和纤维。在例示性实施方案中，该含蛋白质材料包含以干物质计约45%－约65%的大豆蛋白；以干物质计，约20%－约30%的小麦面筋；以干物质计，约10%－约15%的小麦淀粉；以干物质计，约1%－约5%的纤维。在上述的每一个实施方案中，该含蛋白质材料可包含磷酸二钙、L－半胱氨酸或磷酸二钙和L－半胱氨酸的组合物。

(ii) 大豆蛋白材料

[0027] 在例示性实施方案中，如上面详述，在挤出方法中可使用大豆分离蛋白、大豆浓缩蛋白、大豆粉及其混合物。可依照本领域一般已知的方法从整个大豆(whole soybean)获得这些大豆蛋白材料。整体大豆可为标准大豆(即，非基因修饰大豆)、商品化大豆、基因修饰大豆及其组合物。

[0028] 一般而言，当使用大豆分离物时，分离物优选为非高度水解的大豆分离蛋白。然而，在某些实施方案中，高度水解的大豆分离蛋白

可以与其他大豆分离蛋白结合使用，前提是前者在结合后的大豆分离蛋白中的含量一般少于约40%重量。另外，所使用的大豆分离蛋白优选具有足够的乳化强度和凝胶强度以使分离物中的蛋白质能够形成在挤出时基本上对齐的纤维。用于本发明的大豆分离蛋白的实例可市购自，例如，Solae, LLC (St. Louis, Mo.)，并包括SUPRO® 500E、SUPRO® EX 33、SUPRO® 620、SUPRO® 630、和SUPRO® 545。在例示性实施方案中，使用SUPRO® 620的形式，如实施例3所详述。

[0029] 备选地，可将大豆浓缩蛋白与大豆分离蛋白共混以代替部分的大豆分离蛋白，作为大豆蛋白材料来源。一般来说，如果用大豆浓缩蛋白代替部分的大豆分离蛋白，那么用大豆浓缩蛋白代替至多达约40%重量的大豆分离蛋白，更有选地代替达约30%重量的大豆分离蛋白。用于本发明的合适的大豆浓缩蛋白的实例包括市购自Solae, LLC (St. Louis, Mo.)的Promine DSPC、Procon、Alpha 12和Alpha 5800。

[0030] 可任选地使用大豆子叶纤维作为纤维源。一般来说，当共挤出大豆蛋白和大豆子叶纤维的混合物时，合适的大豆子叶纤维一般有效地与水结合。本文中，"有效地与水结合"一般指大豆子叶纤维具有至少 5.0 至约 8.0 克水/克大豆子叶纤维的持水能力，优选地大豆子叶纤维具有至少约 6.0 至约 8.0 克水/克大豆子叶纤维的持水能力。大豆子叶纤维存在于大豆蛋白材料中的量一般可为以无水重量计约 1%－约 20%，优选约 1.5%－约 20%，最优选约 2%－约 5%。可市购合适的大豆子叶纤维。例如，FIBRIM® 1260 和 FIBRIM® 2000 为市购自 Solae, LLC (St. Louis, Mo.)的大豆子叶纤维材料。

(b)添加的成份

[0031] 各种添加成分在不背离本发明的范围的情况下可添加至上面详述的任何含蛋白质材料。例如，可包括抗氧化剂、抗微生物剂及其组合物。 抗氧化添加剂包括BHA、BHT、TBHQ、维生素A、C和E及其衍生物。另外，可包括各种植物提取物例如包含具有抗氧化剂性

质的类胡萝卜素、生育酚或黄酮类化合物，以增加贮藏期限或增加该蛋白质组合物营养。抗氧化剂和抗微生物剂可以以含蛋白质材料的0.01%－约10%重量，优选约0.05%－约5%重量，更优选约0.1%－约2%重量水平的组合形式存在。

(c) 含水量

[0032] 如本领域技术人员所理解，含蛋白质材料和任选的附加成分的含水量可以并将会改变。水的目的为使蛋白质组合物的成分水合。一般而言，含水量可为约1%－约80%重量。在低水分的挤出应用中，含蛋白质材料的含水量可为约1%－约35%重量。备选地，在高水分的挤出应用中，含蛋白质材料的含水量可为约35%－约80%重量。在例示性实施方案中，用来形成挤出物的挤出应用为低水分的。在I(d)和实施例3中详述了产生挤出物的低水分挤出方法的例示性实例，该挤出物具有含基本上对齐的纤维的蛋白质。

(d) 含蛋白质材料的挤出

[0033] 用于制备结构化蛋白质制品的合适的挤出过程包括将蛋白质材料和其它成分引入混合器(即，成分搅拌器)，以使这些成分结合并形成干的共混蛋白质材料预混物。可将干的共混蛋白质材料预混物传输至料斗(hopper)，将干的共混成分从该料斗与水分一起引入预调料槽(pre－conditioner)以形成经调匀的蛋白质材料混合物。 然后将经调匀的材料装入挤压机，在挤压机的螺杆(screw)产生的机械压力下加热混合物以形成熔体挤出块。备选地，可将干的共混蛋白质材料预混物直接装入挤压机，其中引入水分并加热以形成熔体挤出块。熔体挤出块穿过挤出压模装置离开挤压机，形成包含具有基本上对齐的蛋白纤维的结构化蛋白质制品的挤出物。

(i) <u>挤出过程的条件</u>

[0034] 用于本发明实践的合适的挤出设备为双筒、双螺杆挤压机，例

如，如美国专利第4,600,311号所详述。合适的市售挤出设备的更多实例包括Clextral，Inc. (Tampa, Florida)生产的CLEXTRAL Model BC-72挤压机；全部由Wenger Manufacturing，Inc. (Sabetha, Kansas)生产的WENGER Model TX-57挤压机、WENGER Model TX-168挤压机、和WENGER Model TX-52挤压机。例如，在美国专利第4,763,569、4,118,164和3,117,006号中描述适用于本发明的其它常规挤压机，该专利通过整体引用结合至本文中。

[0035] 双螺杆挤压机的螺杆可以相同或相反的方向在筒内旋转。以相同方向的螺杆的旋转称为单流，而以相反方向的螺杆的旋转称为双流。挤压机的单螺杆或双螺杆的速度可根据特定的设备改变；然而，它通常为约250－约400转/分(rpm)。一般地，当螺杆速度增加时，挤出物的密度减少。挤出设备包含由轴和蜗杆部分组装的螺杆、以及如挤出设备制造商所推荐用于挤出植物蛋白材料的混合叶片(mixing lobe)和环型剪切锁死(shearlock)元件。

[0036] 挤出设备一般包含多个温度控制区，在通过挤出压模装置离开挤出设备之前，在机械压力下将蛋白质混合物传输经过这些温度控制区。每一连续加热区中的温度一般比前一加热区的温度高约10°C和约70°C。在一个实施方案中，将经调匀的预混物传输通过挤出设备内的四个加热区，使蛋白质混合物加热至约100°C－约150°C的温度，致使熔体挤出块在约100°C－约150°C的温度下进入挤出压模装置。

[0037] 筒压力取决于许多因素，这些因素包括，例如，挤压机螺杆速度、筒的混合物进料速度、筒的水进料速度和筒内熔体的粘度。

[0038] 可将水注入至挤压机筒以使植物蛋白材料混合物水合并促进蛋白质的质构化。作为形成熔体挤出块的辅助，水可充当增塑剂。可通过与加热区相通的一个或多个注射喷嘴将水引入挤压机筒。一般来说，筒中的混合物包含约1%－约30%重量的水。在一个实施方案中，筒中的混合物包含约5%－约20%重量的水。一般地，控制将水引入至任一加热区的速率以促进具有所需特征的挤出物的产生。已经注意

到，随着水引入筒的速率减少，挤出物的密度减少。

(ii) 任选的预调匀

[0039] 在预调料器中，将含蛋白质材料和任选的添加成分(包含蛋白质的混合物)预热，与水分接触，在温度和压力条件下保持，以允许水分渗入和软化单一颗粒。预调料步骤增加微粒纤维状材料混合物的体积密度，改善它的流动特性。预调料器包含一个或多个桨以促进蛋白质的均匀混合和蛋白质混合物通过预调料器的传输。桨的构型和转速广泛地改变，视预调料器的容量、挤压机吞吐量和/或预调料器或混合物在挤压机筒中的期望滞留时间而定。一般而言，桨的速度为约500－约1300转/分(rpm)。

[0040] 通常来说，在引入挤出设备之前通过将预混物与水分(即，蒸汽和/或水)接触来预调匀包含蛋白质的混合物。优选地，在预调料器中将包含蛋白质的混合物加热至约20°C－约60°C的温度，更优选地约30°C－约45°C。

[0041] 典型地，将包含蛋白质的预混物进行约0.5分钟－约10.0分钟时间的调料，视预调料器的速度和尺寸而定。在示范性实施方案中，将包含蛋白质的预混物进行约3.0分钟－约5.0分钟时间的调料。在预调料器中一般以恒定蒸汽流使预混物与蒸汽和/或水接触并加热，以达到所需温度。在引入至将蛋白质质构化的挤压机筒之前，水和/或蒸汽调匀了(即，水合)预混物，增加它的密度，无干扰地促进干混合物的流动性。如果需要低水分的预混物，那么经调匀的预混物可包含约1%－约35%(重量)的水。如果需要高水分的预混物，那么经调匀的预混物可包含约35%－约80%(重量)的水。

[0042] 经调匀的预混物的体积密度通常为约0.25 g/cm^3－约0.60 g/cm^3。一般来说，随着预调料的蛋白质混合物的体积密度在该范围内增加，蛋白质混合物则更容易加工。目前认为这归因于这样的混合物占据挤压机的螺杆之间的全部或大部分空间，从而促进挤出块传输通

过筒。

(iii) 挤出方法

[0043] 然后将干预混物或经调匀的预混物装入挤压机以加热，剪切，最终增塑混合物。挤压机可选自任何市售挤压机，可为单螺杆挤压机或优选地双螺杆挤压机，该挤压机用螺杆元件机械地剪切混合物。

[0044] 预混物一般引入挤出设备的速率随特定设备而改变。一般来说，以至多约25千克/分钟的速率引入预混物。一般来说，已注意到，随着预混物进料至挤压机速率的增加，挤出物的密度减少。

[0045] 预混物经受挤压机的剪切和压力以增塑该混合物。在挤压机中，挤压机的螺杆元件通过迫使混合物向前通过挤压机和通过压模装置来剪切混合物同时产生压力。螺杆马达速度决定螺杆施加至混合物的剪切力和压力的量。优选地，螺杆马达速度设定至约200 rpm－约500 rpm，更优选约300 rpm－约400 rpm的速度，该速度以至少约20千克/小时和更优选至少约40千克/小时的速率推动混合物通过挤压机。优选地，挤压机产生约500－约1500 psig的挤压机筒出口压力，更优选地产生约600－约1000 psig的挤压机筒出口压力。

[0046] 当混合物经过挤压机时，挤压机加热混合物使混合物中的蛋白质变性。挤压机包括用于加热和/或冷却混合物至约100°C－约180°C的温度的装置。优选地，用于加热或冷却挤压机中的混合物的设备包含挤压机筒外壳，可将加热或冷却介质如蒸汽或水引入该外壳以控制经过挤压机的混合物的温度。挤压机也可包括用于将蒸汽直接注射进挤压机内的混合物中的蒸汽注射口。挤压机优选地包括可受控至独立温度的多个加热区，其中加热区的温度优选地设定至随着混合物经过挤压机前进而增加混合物的温度。在一个实施方案中，可以四个温度区排列设定挤压机，其中第一区域(邻近挤压机入口)设定至约80°C－约100°C的温度，第二区域设定至约100°C－ 135°C的温度，第三区域设定至135°C－约150°C的温度，第四区域(邻近挤压机出口)设定至

150°C－180°C的温度。可根据需要以其它温度区排列设定挤压机。在另一实施方案中，可以五个温度区排列设定挤压机，其中第一区域设定至约25°C的温度，第二区域设定至约50°C的温度，第三区域设定至约95°C的温度，第四区域设定至约130°C的温度，第五区域设定至约150°C的温度。在又一实施方案中，可以六个温度区排列设定挤压机，其中第一区域设定至约90°C的温度，第二区域设定至约100°C的温度，第三区域设定至105°C的温度，第四区域设定至约100°C的温度，第五区域设定至约120°C的温度，第六区域设定至约130°C的温度。

[0047] 混合物在挤压机中形成熔化增塑块。压模装置以一定的排列连接至挤压机，该排列允许增塑混合物从挤压机出口流入压模装置，并当增塑混合物流过压模装置时在经增塑的混合物内产生基本上对齐的蛋白纤维。压模装置可包括面板模具或外围模具。刀速设定至使碎片的尺寸至多5%通过16目筛，至多65%在1/2 -英寸筛上。

[0048] 一个实施方案包括外围压模装置，如图3－5中阐述，一般标记为10。

[0049] 如图3和图4所示，外围压模装置10可包括具有圆柱形两部分外壳模体17的模套12。外壳模体17可包括与前面部分20连接的后面部分18，共同定义与相对的开口72、74相通的内室31。模套12可适于容纳模具插入物14和模具锥体16，用于提供必要的结构元件以在挤出过程期间促进塑化混合物的层流通过外围压模装置10。

[0050] 另外，在外围压模装置10的组装期间，当使前面部分20固定至模套12的后面部分18时，可使模套12的前面部分20固定至适于与具嵌入物14面接的模具锥体16。如进一步显示，模套12的后面部分18确定沿外壳体17的多个圆形出口24，该出口适于在挤出过程期间为挤出物从外围压模装置10挤出提供导管。备选地，多个出口24可具有不同的构型，如正方形、长方形、扇形或不规则的。如进一步显示，模套12的后面部分18可包括环绕开口72的圆形凸缘37，该圆形凸缘确定一对相对的槽82A和82B，当将模套12接合至挤压机时，这些槽用于正确地

使模套12对准。

[0051] 如图5所示，当完全组装外围压模装置10时，模具插入物14置于模套12的后面部分18内，后面部分18固定至模套12的前面部分20，致使模具锥体16的锥形侧面56面向室31并和包在后面部分18和前面20之间。在该方向上，锥形侧面56可操作地联合模具插入物14的前表面27。因此，每一个相邻分流器38的对侧墙50、模具插入物14的底部64、和模具锥体16的锥形侧面56共同确定与相应出口24相通的单独流动槽40。如上所述在模套12、模具插入物14和模具锥体16之间定义的流动槽40在其全部四个侧面上都可为锥形的。因此，从每一流动槽40的入口84至出口24，流动槽40在全部四个侧面上逐渐地向内形成锥体。

[0052] 提及图5A，该图显示阐述通过流动槽40的流动途径"A"的放大图。具体地说，流动槽40通过模具插入物14所定义的开口70与出口24连通。

[0053] 在挤出过程期间，外围压模装置10可操作地与挤压机接合，产生增塑混合物，该混合物接触由模具插入物14的后表面29所确定的凹井52，流入狭口34，进入内部空间开口36，如流动途径"A"所标明。增塑混合物可进入由模具插入物14定义的内部空间44，并进入每一渐缩流动槽42的入口84。然后增塑混合物以以下方式流过每一流动槽42，从各个出口24流出，该方式在外围压模装置10产生的挤出物中形成基本上对齐的蛋白纤维。

[0054] 选择出口24的宽度和高度尺寸，在混合物的挤出之前设定以提供具有所需尺寸的纤维状的材料挤出物。可设定出口24的宽度，致使挤出物类似于从立方肉块到肉片，其中加大出口24的宽度减少挤出物的方块状性质且增加挤出物的片状性质。在示范性实施方案中，出口24的宽度可设定至约10毫米－约40毫米的宽度。

[0055] 可设定出口24的高度尺寸以提供所需挤出物厚度。可设定出口24的高度以提供很薄的挤出物或厚的挤出物。例如，可将出口24的高

度设定至约1毫米－约30毫米。在示范性实施方案中，可将出口24的高度设定至约8毫米－约16毫米。

[0056] 还考虑出口24可为圆的。可设定出口24的直径(diameter)以提供期望的挤出物厚度。可设定出口24的直径以提供很薄的挤出物或厚的挤出物。例如，可将出口24的直径设定至约1毫米－约30毫米。在示范性实施方案中，可将出口24的直径设定至约8毫米－约16毫米。

[0057] 在美国专利申请第60/882,662号中描述适用于本发明的其它外围模具装置，该专利通过整体引用结合到本文中。

[0058] 在离开压模装置之后切割挤出物。用于切割挤出物的合适的装置包括由Wenger Manufacturing, Inc.(Sabetha， Kansas)和Clextral, Inc.(Tampa，Florida)生产的柔韧的刀。典型地，切割装置的速度为约1000 rpm－约2500 rpm。在示范性实施方案中，切割装置的速度为约1600 rpm。

[0059] 干燥器，如果使用一个，通常包含多个干燥区，其中空气温度可改变。一般来说，一个或多个区域内的空气温度为约100°C－约185°C。典型地，挤出物在干燥器中存在足够的时间以提供具有所需湿度的挤出物。通常将挤出物干燥至少约5分钟，更通常至少约10分钟。备选地，可将挤出物在较低温度如约70°C下干燥较长时间。合适的干燥器包括Wolverine Proctor & Schwartz (Merrimac，Mass)、National Drying Machinery Co. (Philadelphia，Pa.)、Wenger (Sabetha，Kans.)、Clextral (Tampa，FIa.)和Buehler (Lake Bluff，I11.) 制造的那些干燥器。

[0060] 所需的水分可根据挤出物的预定应用而广泛改变。一般而言，挤出材料具有约6%－约13%重量的水分，如果干燥，该挤出材料需要在水中水合直至水被吸收和纤维被分离。如果蛋白质材料不干燥或不完全干燥，那么它的含水量较高，一般为约16%－约30%重量。

[0061] 还可将干燥后的挤出物进一步捣碎以降低挤出物的平均粒度。合适的磨具包括锤式粉碎机如Hosokawa Micron Ltd.(英国)制造的Mikro Hammer Mills。

(e) 结构化蛋白质制品的特征

[0062] 在I(d)中产生的挤出物典型地包含具有基本上对齐的蛋白纤维的结构化蛋白质制品。在本发明的上下文中，"基本上对齐的"一般指蛋白纤维的排列，致使当水平面观察时，非常高百分比的形成结构化蛋白质制品的蛋白纤维以小于约45°角彼此邻近。典型地，平均至少55%的包含结构化蛋白质制品的蛋白纤维为基本上对齐的。在另一实施方案中，平均至少60%的包含结构化蛋白质制品的蛋白纤维为基本上对齐的。在另一实施方案中，平均至少70%的包含结构化蛋白质制品的蛋白纤维为基本上对齐的。在另一实施方案中，平均至少80%的包含结构化蛋白质制品的蛋白纤维为基本上对齐的。在还另一实施方案中，平均至少90%的包含结构化蛋白质制品的蛋白纤维为基本上对齐的。用于测定蛋白纤维对齐程度的方法为本领域已知，该方法包括基于显微照相图像的目测。

[0063] 通过实施例，**图1和图2**描述的显微照相图像阐述具有基本上对齐的蛋白纤维的结构化蛋白质制品与具有显著的交叉影线的蛋白纤维的蛋白质产物相比之间的差异。**图1**描述依照I(a) – I(d)制备的具有基本上对齐的蛋白纤维的结构化蛋白质制品。相比之下，**图2**描述包含有显著交叉影线而没有基本上对齐的蛋白纤维的蛋白质产物。因为蛋白纤维为基本上对齐的，如**图1**所示，所以用于本发明的结构化蛋白质制品一般具有熟肌肉的质构和一致性。相反，具有随机取向或交叉影线的蛋白纤维的挤出物一般具有软的或海棉状的质构。

[0064] 除具有基本上对齐的蛋白纤维之外，该结构化蛋白质制品通常还具有基本上类似于整块肌肉的剪切强度。在本发明的上下文中，术语"剪切强度"提供量化充分纤维状的网络的形成的一种方法，该网络的形成赋予结构化蛋白质制品整体-肌肉样质构和外观。剪切强度为切削给定样品所需要的以克计算的最大力。在实施例1中描述用于测定剪切强度的方法。

[0065] 一般而言，本发明的结构化蛋白质制品具有至少 1400 克的平均剪切强度。在另一实施方案中，所述结构化蛋白质制品具有约 1500 - 约 1800 克的平均剪切强度。在又一实施方案中，结构化蛋白质制品具有约 1800 - 约 2000 克的平均剪切强度。在再一实施方案中，结构化蛋白质制品具有约 2000 - 约 2600 克的平均剪切强度。在再一实施方案中，结构化蛋白质制品具有至少 2200 克的平均剪切强度。在再一实施方案中，结构化蛋白质制品具有至少 2300 克的平均剪切强度。在又另一实施方案中，结构化蛋白质制品具有至少 2400 克的平均剪切强度。在还再一实施方案中，结构化蛋白质制品具有至少 2500 克的平均剪切强度。在再一实施方案中，结构化蛋白质制品具有至少 2600 克的平均剪切强度。

[0066] 可通过碎片特征试验进行量化在结构化蛋白质制品中形成的蛋白纤维尺寸的方法。碎片特征为一般确定在结构化蛋白质制品中形成的大碎片的百分比的试验。碎片特征的百分比以间接的方式提供附加方法以量化在结构化蛋白质制品中的蛋白纤维对齐程度。一般而言，当大碎片的百分比增加时，在结构化蛋白质制品内的蛋白纤维的对齐程度通常也增加。相反地，当大碎片的百分比减少时，在结构化蛋白质制品内的蛋白纤维的对齐程度也典型地减少。

[0067] 在实施例2中详述用于确定碎片特征的方法。本发明的结构化蛋白质制品通常具有至少10%重量大碎片的平均碎片特征。在又一实施方案中，该结构化蛋白质制品具有约10% - 约15%重量大碎片的平均碎片特征。在另一实施方案中，该结构化蛋白质制品具有约15% - 约20%重量大碎片的平均碎片特征。在又一实施方案中，该结构化蛋白质制品具有约20% - 约25%重量大碎片的平均碎片特征。在另一实施方案中，平均碎片特征为至少20%重量，至少21%重量，至少22%重量，至少23%重量，至少24%重量，至少25%重量，或至少26%重量大碎片。

[0068] 本发明的合适的结构化蛋白质制品通常具有基本上对齐的蛋

白纤维，具有至少1400克的平均剪切强度，和具有至少10%重量大碎片的平均碎片特征。更典型地，该结构化蛋白质制品具有至少55%对齐的蛋白纤维，具有至少1800克的平均剪切强度，和具有至少15%重量大碎片的平均碎片特征。在示范性实施方案中，该结构化蛋白质制品具有至少55%对齐的蛋白纤维，具有至少2000克的平均剪切强度，和具有以大碎片重量计至少17%的平均碎片特征。在另一示范性实施方案中，该结构化蛋白质制品具有至少55%对齐的蛋白纤维，具有至少2200克的平均剪切强度，和具有以大碎片重量计至少20%的平均碎片特征。

(II) 重组肉组合物

[0069] 结构化蛋白质制品在本发明中用作重组肉组合物的成分。重组肉组合物可包含动物肉和结构化蛋白质制品的混合物，或它可不包含肉而主要包含结构化蛋白质制品。用于产生重组肉组合物的方法一般任选地包括将其与动物肉混合、染色和水合结构化蛋白质制品，减少其粒度，将组合物进一步处理成包含肉的食品。

(a)任选与动物肉共混

[0070] 在用下面详述的着色组合物接触结构化蛋白质制品之前或之后，该结构化蛋白质制品可任选地与动物肉共混以产生动物肉组合物。一般来说，该结构化蛋白质制品与具有类似粒度的动物肉共混。

[0071] 本领域已知使用高压机器来产生机械去骨的或分离的生肉，所述高压机器通过首先将骨压碎，使动物组织粘连，然后迫使动物组织，而不是骨，通过筛或类似筛选装置来将骨从动物组织分离。在本发明中，动物组织包含肌肉组织、器官组织、结缔组织和皮肤。该方法形成具有面糊般(batter like)稠度的非结构化、糊状软动物组织共混物，通常称为机械去骨肉或MDM。该糊状共混物的粒度为约0.25－约15毫米，优选达约5毫米，最优选达约3毫米。

[0072] 虽然优选以至少基本上冷冻形式提供动物组织，亦称生肉，以避免在加工之前的微生物腐败，但是一旦将肉磨碎，就不需要将其冻结以提供形成单一条或片的可切性。与肉碎不同，生肉具有天然的高水分含量，蛋白质对水分的比例为约1:3.6－1:3.7。

[0073] 用于本发明的生肉可为适于食用的任何食用肉。该肉可为非炼制的、非干燥的、生肉、生肉制品、生肉副制品及其混合物。所述肉或肉制品为捣碎的，一般以完全冻结或至少基本上冻结的状况每日供应因此避免微生物腐败。碎肉的温度一般低于约40°C(104°F)，优选低于约10°C(50°F)，更优选约－4°C(25°F)－约6°C(43°F)，最优选约－2°C(28°F)－约2°C(36°F)。若使用冷藏或冷冻肉，在工厂地点长时期地贮存大量解冻肉一般是不切实际的。冻结制品比冷藏或冷却制品提供更长的放置时间(lay time)。

[0074] 为代替冻结的碎肉，可新鲜制备用于制备重组肉制品的碎肉，只要新鲜制备的碎肉满足不超过约40°C (104°F)的温度条件。

[0075] 基于生肉的重量，生的冻结或解冻肉的含水量一般为至少约50%重量，最经常为约60%重量－约75%重量。在本发明的一个实施方案中，生的冻结或解冻肉的脂肪含量为至少2%重量。生的冻结或解冻肉的脂肪含量一般为约3%重量－约95%重量。在另一实施方案中，生的冻结或解冻肉的脂肪含量为约20%重量－约95%重量。在本发明的其它实施方案中，可组合肉制品以产生脂肪含量为约15%重量－约30%重量的肉组合物。在另一实施方案中，该肉组合物的脂肪含量可小于约10%重量，可使用脱脂肉制品。

[0076] 可在约－18°C(.4°F)－约0°C(32°F)的温度下贮存冻结或冷冻肉。一般以20千克块供应。使用时，允许肉块融化直至约10°C(50°F)，即，解冻，但是在温和(tempered)的环境中。因此，肉块的外层，例如直至约1/4"的深度，可解冻或融化但仍处于约0°C(32°F)的温度，而剩下的肉块内部，虽然还冻结，但继续融化，因此保持外部低于约10°C(50°F)。

[0077] 各种动物肉适用于重组肉组合物。例如，该肉可为选自绵羊、牛、山羊、猪、野牛(bison)和马的家畜。动物肉可来自家禽，例如鸡、鸭、鹅或火鸡。备选地，动物肉可来自狩猎动物。合适的狩猎动物的非限制性实施例包括野牛(buffalo)、鹿、麋鹿、驼鹿、驯鹿、北美驯鹿、羚羊、兔、松鼠、河狸、麝鼠、负鼠、浣熊、犰狳、豪猪、鳄鱼和蛇。在又一实施方案中，该动物肉可来自鱼或贝。合适的鱼或鱼制品的非限制性实施例包括海水鱼和淡水鱼，例如，鲶鱼、鲔鱼、鲑鱼、鲈鱼、鲭、绿鳕、狗鳕、罗非鱼、鳕鱼、石斑鱼、白鲑、弓鳍鱼、雀鳝、白鲟、鲟鱼、鳊鱼、鲤鱼、鳟鱼、鱼糜、walleye、黑鱼和鲨鱼。在示范性实施方案中，动物肉来自牛肉、猪肉或火鸡肉。

[0078] 肉包括骨骼的横纹肌或例如在舌、膈膜、心脏或食道发现的横纹肌，有或没有伴随覆盖的脂肪和通常伴随肉的部分皮肤、腱、神经和血管。肉副制品的实例为器官和组织如肺、脾、肾、脑、肝、血、骨、部分脱脂低温脂肪组织、不含其内容物的胃、肠、等。

[0079] 术语"肉副制品"意指屠宰动物(包括但不限于哺乳动物、家禽等)的胴体的非炼制部分，并包括如在Association of American Feed Control Officials，Incorporated出版的Definitions of Feed Ingredients中的术语"肉副制品"所包含的这样的成分。

[0080] 典型地，与动物肉组合物中的动物肉的量有关的结构化蛋白质制品的量可以并将会根据组合物的预定用途改变。通过实施例，当期望具有较小程度的动物风味的显著素食组合物时，在重组肉组合物中动物肉浓度可为约45%、40%、35%、30%、25%、20%、15%、10%、5%、2%、或0%重量。备选地，当期望具有较高程度的动物风味的重组肉组合物时，在重组肉组合物中动物肉浓度可为约50%、55%、60%、65%、70%、75%、80%、85%、90%或95%重量。结果，在重组肉组合物中水合结构化植物蛋白制品的浓度可为约5%、10%、15%、20%、25%、30%、35%、40%、45%、50%、55%、60%、65%、70%、75%、80%、85%、90%、95%、或99%重量。在示范性实施方案中，重组肉

组合物一般具有约40%－约60%重量的水合结构化蛋白质制品和约40%－约60%重量的动物肉。

[0081] 还考虑在本发明中可使用各种肉质。例如，可使用碎的或块或肉片形式的整块肌肉。该肉的脂肪含量可广泛改变。

(b) 任选与碎蔬菜或碎水果共混

[0082] 在用下面详述的着色组合物接触结构化蛋白质制品之前或之后，该结构化蛋白质制品可任选地与碎蔬菜或碎水果共混以产生重组肉组合物。一般来说，结构化蛋白质制品与具有类似粒度的碎蔬菜或碎水果共混。

[0083] 各种植物或水果适用于重组肉组合物。典型地，与重组肉组合物中的碎蔬菜或碎水果的量有关的结构化蛋白质制品的量可以和将会取决于组合物的预定用途改变。通过实施例，在重组肉组合物中的碎蔬菜或碎水果的浓度可为约95%、90%、85%、80%、75%、70%、65%、60%、55%、50%、45%、40%、35%、30%、25%、20%、15%、10%、5%、2%或0%重量。因此，在重组肉组合物中的水合结构化植物蛋白制品的浓度可为约5%、10%、15%、20%、25%、30%、35%、40%、45%、50%、55%、60%、65%、70%、75%、80%、85%、90%、95%、或99%重量。在示范性实施方案中，重组肉组合物一般具有约40%－约60%重量的水合结构化蛋白质制品和约40%－约60%重量的碎蔬菜或碎水果。

(c)使结构化蛋白质制品水合和着色

[0084] 一般用着色组合物将结构化蛋白质制品染色，因此与生肉和/或熟肉相似。 本发明的着色组合物可包含热不稳定的色素、热稳定的色素和褐变剂。色素类型的选择和存在于着色组合物中的量可以并将会根据所需重组肉组合物颜色改变。当重组肉组合物模拟"预熟制品"时，结构化植物产物通常与褐变剂和/或热稳定的色素接触。 备选地，

当重组肉组合物模拟生肉时，结构化蛋白质制品一般与热不稳定的红色素，也与褐变剂和/或热稳定的色素接触，致使当煮熟该重组肉组合物时它的外观从生肉颜色变到全熟的颜色。合适的热不稳定的红色素、热稳定的色素和褐变剂描述如下。

[0085] 可在装入挤压机之前将着色剂与含蛋白质材料和其它成分混合。备选地，可在装入挤压机之后将着色剂与含蛋白质材料和其它成分结合。在挤出过程期间所使用的热或热和压力的存在下，一些着色剂和含蛋白质材料的组合物产生不必要的颜色。作为实例，当在挤出过程期间使洋红(或紫胶)与含蛋白质材料接触时，颜色从红色变到紫罗兰色/紫色。

[0086] 该着色剂可为天然着色剂、天然着色剂的组合物、人造着色剂、人造着色剂的组合物、或天然着色剂和人造着色剂的组合物。合适的批准用于食品的天然着色剂的实例包括胭脂树红(微红－橙色)、花色苷(红色到蓝色，取决于 pH)、甜菜汁、β－胡萝卜素(橙色)、β－APO 8 胡萝卜醛(橙色)、黑加仑、焦化糖；斑蝥黄质(粉红色－红色)、焦糖、洋红/胭脂红酸(鲜红)、胭脂虫提取物(红色)、姜黄素(黄色－橙色)；紫胶(猩红)、叶黄素(红色－橙色)；番茄红素(橙色－红色)、混合类胡萝卜素(橙色)、红曲霉(红色－紫色，得自发酵的红米)、红辣椒、红甘蓝汁、核黄素(黄色)、藏红花、二氧化钛(白色)和姜黄(黄色－橙色)。合适的在美国批准用于食品用途的人造着色剂包括 FD&C Red No. 3 (藻红)、FD&C Red No. 40 (诱惑红)、FD&C Yellow No. 5 (柠檬黄)、FD&C Yellow No. 6 (日落黄 FCF)、FD&C Blue No. 1 (亮蓝)、FD&C Blue No. 2 (靛蓝)。可用于其它国家的人造着色剂包括 Cl Food Red 3 (淡红)、Cl Food Red 7 (胭脂红)、Cl Food Red 9 (苋菜红)、Cl Food Yellow 13 (喹啉黄)和 Cl Food Blue 5 (专利蓝 V)。食品着色剂可为染料，这些染料为可溶于水的粉末、颗粒或液体。备选地，天然和人造食品着色剂可为色淀染料，该色淀染料为染料和不可溶材料的组合物。色淀染料为非油溶性的，但是为油可分散的；它们通过分散染色。

[0087] 合适的着色剂可以各种形式与含蛋白质材料组合。非限制性实例包括固体、半固体、粉末、液体和明胶。所使用的着色剂的类型和浓度可根据使用的含蛋白质材料和染色的结构化蛋白质制品的所需颜色而改变。一般来说，着色剂的浓度可为约0.001%－约5.0%重量。在一个实施方案中，着色剂的浓度可为约0.01%－约4.0%重量。在另一实施方案中，着色剂的浓度可为约0.05%－约3.0%重量。在又一实施方案中，着色剂的浓度可为约0.1%－约3.0%重量。在又一实施方案中，着色剂的浓度可为约0.5%－约2.0%重量。在另一实施方案中，着色剂的浓度可为约0.75%－约1.0%重量。

[0088] 热不稳定的色素可用于着色组合物以提供生的未煮熟肉的红颜色。热不稳定的色素通常为具有与未熟状态的褐色肉(即，生肉)的红颜色相似的红色的食品着色染料或粉末。一般而言，热不稳定的色素为具有当暴露于有效煮熟结构化蛋白质制品的温度时降解的结构的着色染料或粉末。因此，该色素热降解，因此当煮熟结构化蛋白质制品时不能给结构化蛋白质制品提供实质的颜色。该热不稳定的色素典型地在约100°C或更高的温度降解，更优选在约75°C或更高的温度，最典型地在约50°C或更高的温度。在一个实施方案中，热不稳定的色素为甜菜苷，具有低的热稳定性的红色食品着色染料或粉末。甜菜苷源自红色甜菜，典型地制备自红色甜菜汁或甜菜粉末。热不稳定的色素可以着色组合物干重的约0.005%－约30%存在于着色组合物中。当热不稳定的色素为甜菜苷时，甜菜苷优选地构成约0.005%－约0.5%干重的着色组合物，更优选地构成约0.01%－约0.05%干重的着色组合物。备选地，包含甜菜苷的甜菜粉或甜菜提取制备物可以着色组合物干重的约5%－约30%、更优选约10%－约25%存在于着色组合物中。作为实例，着色组合物可以由0.0087%胭脂红、21.68%甜菜粉、52.81%葡萄糖、和25.43% NFE (所有百分比均以重量计)组成。

[0089] 由一种或多种热稳定的食品着色染料组成的热稳定的色素可用于该着色组合物。合适的热稳定的色素包括给结构化蛋白质制品有

效提供与未熟状态和熟状态下的褐变肉相似的颜色的那些色素。合适的热稳定的色素包括焦糖食品着色材料，和黄色、褐色、和/或橙色食品着色剂。多种焦糖食品着色剂可用于本发明，并以粉末形式或液体形式市售，该着色剂包括Caramel Color No. 602 (可得自Williamson Company，Louisville，Kentucky)和5440 Caramel Powder D. S. (可得自Sensient Colors，Inc.，St. Louis，Missouri)。

[0090] 几种类型的市售黄色/橙色食品着色剂可用于热稳定的色素。合适的黄色/橙色食品着色剂包括胭脂红、姜黄和人造黄色染料如FD&C Yellow #5。存在于着色组合物中的热稳定色素的量为着色组合物干重的约0%－约7%、更优选约0.1%－约3%干重的着色组合物。黄色/橙色食品着色剂材料，优选胭脂红，可占着色组合物的干重的约0%－约2%、优选约0.1%－约1%。焦糖食品着色剂材料典型地占着色组合物干重的约0%－约5%，优选约0.5%－约3%。

[0091] 着色组合物可包括褐变剂，该褐变剂包含胺源和还原糖。如上详述，当煮熟蛋白质材料时，褐变剂一般引起混合了着色组合物的含蛋白质材料变成与熟的褐色肉类似的褐色。在备选的实施方案中，着色组合物的褐变剂也可包括胺源。胺化合物与还原糖反应以引起褐变。合适的胺源包括多肽材料、水解的蛋白质材料、或氨基酸材料。在没有任何特定理论的约束下，优选包括多肽材料、水解的蛋白质和/或氨基酸材料作为褐变剂中的胺源以增强所需的褐变。在示范性实施方案中，该分离的大豆蛋白为褐变剂中的胺基源。当包括进着色组合物中时，存在于着色组合物中的胺源一般为着色组合物干重的约20%－约55%。例示性褐变剂为还原糖。当煮熟含蛋白质材料时，在存在包含胺基的化合物时，合适的还原糖通常能够经过Maillard褐变反应以提供所需的褐变。合适的还原糖的代表性实施例包括木糖、阿拉伯糖、半乳糖、果糖、甘油醛、甘露糖、葡萄糖、乳糖和麦芽糖。在示范性实施方案中，还原糖为葡萄糖。还原糖可以着色组合物干重的约25%－约95%、优选约30%－约60%存在于着色组合物中。

[0092] 在示范性实施方案中，着色组合物包含甜菜色素、胭脂红、焦糖着色剂、还原糖、氨基酸源。在本实施方案的一个备选方案中，氨基酸源包含由氨基酸和二级氨基酸组成的肽。在另一备选实施方案中，氨基酸源为分离的大豆蛋白。

[0093] 着色组合物还可包含酸度调节剂以维持pH在着色剂的最优范围。 该酸度调节剂可为酸化剂。可添加至食物的酸化剂的实例包括柠檬酸、乙酸(醋酸)、酒石酸、苹果酸、富马酸、乳酸、葡糖酸、磷酸、山梨酸、盐酸、丙酸和苯甲酸。着色组合物中的酸化剂的最终浓度可为以着色组合物的重量计约0.001%－约5%。酸性调节剂也可为pH－提高剂(raising agent)，例如磷酸氢二钠、碳酸钠、碳酸氢钠、氢氧化钠和氢氧化钾。

[0094] 可通过使用本领域普通技术人员已知的方法和过程将成分组合来制备本发明的着色组合物。典型地，该成分可以液体形式或粉末形式、并且经常以两种形式有效。可直接混合这些成分以形成着色组合物，但优选地在水溶液中组合这些着色组合物的成分，总浓度为约10%－约25%重量，其中着色剂水溶液可方便地添加至大量水，用于混合和染色结构化蛋白质制品。

(d)添加任选的成分

[0095] 重组肉组合物可任选地包括各种香料、调料、抗氧化剂、或其它成分以赋予所需的风味或质构或增加最终食品营养。如技术人员所理解，添加至重组肉组合物的成分的选择可以并将会取决于要生产的食品。

[0096] 重组肉组合物可包含约1%－约30%重量的脂肪源以赋予风味。一般来说，该脂肪源为动物脂肪。合适的动物脂肪包括牛肉脂肪、猪肉脂肪、家禽脂肪和羔羊肉脂肪。在示范性实施方案中，重组肉组合物包含约10%－约20%重量的脂肪源。在另一实施方案中，可使用植物来源的脂肪源，非限制性实例包括油例如芥花油、棉子油、葡萄油、

橄榄油、花生油、棕榈油、大豆油、向日葵油、植物油、及其组合。植物来源的脂肪源的重量百分比可为约10%－20%。

[0097] 重组肉组合物还可包含抗氧化剂。抗氧化剂可防止动物肉中的多不饱和脂肪酸(例如，ω-3 脂肪酸)的氧化，抗氧化剂也可防止重组肉组合物中的氧化变色。抗氧化剂可为天然的或合成的。 合适的抗氧化剂包括，但不限于，抗坏血酸及其盐、抗坏血酸棕榈酸酯、抗坏血酸硬脂酸酯、阿诺克索牟(anoxomer)、N-乙酰基半胱氨酸、异硫氰酸苄酯、间氨基苯甲酸、邻氨基苯甲酸、对氨基苯甲酸(PABA)、叔丁对甲氧酚(BHA)、丁基羟基甲苯(BHT)、咖啡酸、斑蝥黄质、α-胡萝卜素、β-胡萝卜素、β-caraotene、β-阿朴-胡萝卜素酸、鼠尾草酚、香芹酚、儿茶酚、没食子酸十六酯、绿原酸、柠檬酸及其盐、丁香提取物、咖啡豆提取物、p-香豆酸、3,4-二羟基苯甲酸、N,N'-二苯对苯二胺(DPPD)、硫代二丙酸二月桂酯、硫代二丙酸二硬脂酰酯、2,6-二-叔-丁基苯酚、没食子酸十二酯、依地酸、鞣花酸、异抗坏血酸、异抗坏血酸钠、 七叶亭、七叶苷、6-乙氧基-1,2-二氢-2,2,4-三甲基喹啉、没食子酸乙酯、乙基麦芽酚、乙二胺四乙酸(EDTA)、桉树提取物、丁香酚、阿魏酸、类黄酮(例如，儿茶素、表儿茶精、没食子酸表儿茶精、表没食子儿茶精(EGC)、没食子酸表儿茶精(EGCG)、多酚表儿茶素-3-没食子酸酯)、黄酮(例如，芹菜素、白杨素、木犀草素)、黄酮醇(例如，橡精、杨梅酮、daemfero)、黄烷酮、白蜡树亭、富马酸、没食子酸、龙胆提取物、葡糖酸、甘氨酸、愈创木脂、橙皮素、α-羟苄基次膦酸、羟基桂皮酸、羟基戊二酸、对苯二酚、N-羟基丁二酸、羟基酪醇、羟脲、米糠提取物、乳酸及其盐、卵磷脂、柠檬酸卵磷脂；R-α-硫辛酸、叶黄素、番茄红素、苹果酸、麦芽酚、5-甲氧色胺、没食子酸甲酯、 柠檬酸一甘油酯；柠檬酸单异丙酯；桑黄素、β-萘黄酮、去甲二氢愈创木酸(NDGA)、没食子酸辛酯、草酸、柠檬酸棕榈酯、吩噻嗪、磷脂酰胆碱、磷酸、磷酸酯、植酸、phytylubichromel、甘椒提取物、没食子酸丙酯、多磷酸、栎皮酮、反-白藜芦醇、迷迭香提取物、迷迭香酸、鼠尾草提取物、

芝麻酚、水飞蓟素、芥子酸、琥珀酸、柠檬酸十八酯、丁香酸、酒石酸、麝香草酚、生育酚(即，α-、β-、γ-和Δ-生育酚)、生育三烯酚(即，α-、β-、γ-和Δ-生育三烯酚)、酪醇、香草酸、2,6-二-叔丁基-4-羟甲基苯酚(即，Ionox 100)、2,4-(三-3',5'-二-叔丁基-4'-羟基苄基)-均三甲苯(即，Ionox 330)、2,4,5-三羟基丙基苯基酮、泛醌、叔丁基氢醌(TBHQ)、硫代二丙酸、三羟基丙基苯基酮、色胺、酪胺、尿酸、维生素K及衍生物、维生素Q10、小麦胚芽油、玉米黄素、或它们的组合。

[0098] 在重组肉组合物中抗氧化剂的浓度可为约0.0001%－约20%重量。在另一实施方案中，在重组肉组合物中抗氧化剂的浓度可为约0.001%－约5%重量。在又一实施方案中，在重组肉组合物中抗氧化剂的浓度可为约0.01%－约1%重量。

[0099] 在另一实施方案中，重组肉组合物还可包含至少一种调味调味剂。所述调味剂可为天然的，或调味剂可为人造的。所述调味剂可模仿或替换在瘦肉或脂肪组织中发现的成分，例如，血清蛋白质，肌肉蛋白质，水解的动物蛋白质，牛油、脂肪酸、等。调味剂可提供动物肉风味、烤肉风味、半熟牛肉风味等。调味剂可为动物肉油、香料提取物的油树脂或aquaresin、香料油、天然熏液、天然烟提取物(natural smoke extract)、酵母抽提物、或香菇提取物。 其它调味剂可包括洋葱香料、大蒜香料或草药香料。重组肉组合物还可包含增味剂。可使用的增味剂的实施例包括盐(氯化钠)、谷氨酸盐(例如，谷氨酸单钠)、甘氨酸盐、鸟苷酸盐、肌苷酸盐、5'-核苷酸盐、水解的动物蛋白、和水解的植物蛋白。

[00100] 重组肉组合物可任选包括多种食用香料。合适的调味剂包括动物肉香料、动物肉油、香料提取物、香辛料油、天然熏液、天然烟提取物、酵母抽提物、雪利酒、薄荷、红糖、蜂蜜。食用香料和药料也可以含油树脂和乙二醇硼酸脂的形式生效。其它调味剂可包括洋葱香料、大蒜香料或草药香料。在备选的实施方案中，调味剂可为坚果味的、甜的、或水果味的。 合适的水果食用香料的非限制性实例包

括苹果、杏、鳄梨、香蕉、黑莓、黑樱桃、蓝莓、博伊森莓、网纹甜瓜、樱桃、椰子、蓝莓(cranberry)、无花果、葡萄、葡萄柚、青苹果、蜜莓果、猕猴桃、柠檬、来檬、芒果、野莓(mixed berry)、橙子、桃、柿子、菠萝、木莓、草莓和西瓜。重组肉组合物还可包括增味剂。合适的增味剂的非限制性实例包括氯化钠盐、谷氨酸盐、甘氨酸盐、鸟苷酸盐、肌苷酸盐和5-核苷酸盐、酵母抽提物、香菇提取物、干鲣提取物、和海藻提取物。重组肉组合物也可使用各种调味汁和醋渍汁，所述调味汁和醋渍汁可通过发酵或共混食用香料、调味料、油剂、水、增味剂、抗氧化剂、酸化剂、防腐剂和甜味剂制备。

[00101] 在其它实施方案中，重组肉组合物还可包含增稠剂或胶凝剂，例如海藻酸及其盐、琼脂、角叉菜胶及其盐、加工过的麒麟菜(Eucheuma)海藻、树胶(阿拉伯胶、豆角胶、槐豆胶、瓜尔豆胶、西黄耆胶和黄原胶)、果胶、羧甲基纤维素钠、甲基纤维素和改性淀粉。

[00102] 在又一实施方案中，重组肉组合物还可包含营养素例如维生素、矿物质、抗氧化剂、ω-3脂肪酸、或草药。合适的维生素包括维生素A、C、和E，这些也是抗氧化剂，和维生素B和D。可添加的矿物质的实例包括铝、铵、钙、镁、铁和钾的盐。合适的ω-3脂肪酸包括二十二碳六烯酸(DHA)、EPA(二十碳五烯酸)和ALA(α-亚麻酸)。 可添加的草药包括月桂叶、罗勒、芹菜叶、香叶芹、细香葱、芫荽叶、胡荽、小茴香、莳萝、姜、肉豆蔻、马珠草、胡椒、姜黄、欧芹、牛至、龙蒿和百里香。

(III)食品

[00103] 可将重组肉组合物加工成具有各种形状的各种食品。当蛋白质组合物还包含选自以下的至少一种成分时：凝胶蛋白质、动物脂肪、氯化钠、磷酸盐(三聚磷酸钠、酸式焦磷酸钠、六偏磷酸盐等)、着色剂、固化剂、抗氧化剂、抗微生物剂、风味剂、或其混合物，该制品和过程以只使用结构化蛋白质制品、动物肉和水的制品和过程类似的

方法来实现。 首先用水将蛋白质组合物水合和破碎以暴露并分离纤维。当完成水合和破碎时，添加着色剂。添加动物肉和水，将内容物混合直至获得均质体。然后添加动物脂肪，风味剂、氯化钠、磷酸盐和凝胶蛋白质。在另一实施方案中，可与盐和磷酸盐一起添加硝酸钠。

[00104] 可通过手工或通过机器将产生的均质重组肉制品形成肉条、肉排、肉片、肉饼、或一般的用于烤肉块的立方－形状。重组肉制品可形成为肉棒。也可将重组肉制品塞入可渗透的或不可渗透的肠衣以形成香肠。

[00105] 一旦形成，将重组肉制品煮熟、部分煮熟用于随后完成，或在未煮熟状态、部分煮熟状态或煮熟状态冻结。煮熟包括炸或指嫩煎或油炸、烘焙、烟熏和碰撞烹调(impingement cooking)和蒸。还可将完全煮熟的重组肉制品切片、破碎或研磨。

[00106] 此外、重组肉制品可经受发酵。通过调整肉制品的pH至约4.0－约5.2将肉制品发酵。发酵通过添加乳酸培养液(lactic acid culture)来完成。也可通过使用柠檬酸、乳酸、葡糖酸δ内酯及其混合物的直接酸化进行酸化。

[00107] 可不作加工包装重组肉制品(在正在干燥、已部分干燥、已干燥、已煮熟或未煮熟之前)。重组肉制品的进一步加工(在正在干燥、已部分干燥、已干燥、已煮熟或未煮熟之前)可为例如在冷冻通道中瞬时冷冻，和随后在合适类型的容器如塑料小袋等中自动分配包装。如果制品预定用于快餐市场或用于饮食服务应用，其中在消费之前通常将该制品油炸或烘焙，所述类型的进一步加工和包装是合适的。

[00108] 备选地，在重组肉制品(在正在干燥、已部分干燥、已干燥、已煮熟或未煮熟之前)形成之后，也可能用糖溶液或相关物质喷洒制品表面以在油炸或烘焙期间获得均匀的褐变。然后，现在可以将制品瞬时冷冻，以分配包装出售(即在小袋中)。也可由消费者在对流烘箱中烘焙或处理重组肉制品，而不是油炸。此外，也可在煮熟之前或之后将重组肉制品夹上面包，或覆盖另一类型的覆盖物。另外，可在压力

锅中蒸煮重组肉制品以杀死可能存在的任何微生物。

[00109] 也可以以常规方式并使用常规密封方法将已煮熟或未煮熟的重组肉制品包装并密封在罐中。通常，该阶段的罐维持在65°C－77°C的温度下，尽快运送至压力锅或煮熟阶段以防止在此阶段的装罐和灭菌之间的时期内存在任何微生物变质的风险。填在设计用于压力锅煮熟的不可渗透肠衣中的重组肉可在压力锅炊具中煮熟，以制备耐贮存的香肠。

[00110] 为了保证重组肉制品经一旦形成具有完整的肌肉质构，有必要至少约75%重量的蛋白质组合物包含至少约15%重量的由以下组成的大碎片：至少约4厘米长的植物蛋白(vegetable protein)纤维、至少约3厘米长的植物蛋白质丝条、和至少约2厘米长的植物蛋白质块；并且有必要至少约75%重量的蛋白质组合物具有至少约1400克的剪切强度。

[00111] 可通过以下方法制备蔬菜制品(vegetable product)：将蛋白质组合物，优选水合的和破碎的大豆蛋白组合物组合；其中约 75%重量的蛋白质组合物由至少约 15%重量的碎片组成：所述碎片由至少约 4 厘米长的蛋白纤维、至少约 3 厘米长的蛋白质丝条、和至少约 2 厘米长的蛋白质块组成；且其中至少约 75%重量的蛋白质组合物具有至少约 1400 克的剪切强度；与

碎蔬菜组合(combine)；和

将优选的水合的和破碎的大豆蛋白组合物与碎蔬菜混合以产生均质的、纤维状的和结构化蔬菜制品，该蔬菜制品具有基本上对齐的蛋白纤维。

[00112] 由上述方法制备的蔬菜制品的实例为素食食品，该素食食品包括素食小馅饼、素食热狗、素食香肠和素食脆饼(vegetarian crumble)。素食食品的另一实例为搀入了水合的和破碎的蛋白质组合物的奶酪。

[00113] 可通过以下方法制备水果制品(fruit product)：将蛋白质组合物，优选水合的和破碎的大豆蛋白组合物与碎水果组合；其中约75%

重量的蛋白质组合物由至少约15%重量的碎片组成：所述碎片由至少约4厘米长的蛋白纤维、至少约3厘米长的蛋白质丝条、和至少约2厘米长的蛋白质块组成；且其中至少约75%重量的蛋白质组合物具有至少约1400克的剪切强度，随后将优选的水合的和破碎的大豆蛋白组合物与碎水果混合以产生均质的、纤维状的和结构化水果制品，该水果制品具有基本上对齐的蛋白纤维。

[00114] 由上述方法制备的水果制品的实例为休闲食品，该休闲食品包括水果卷、谷类食品和水果脆饼(fruit crumble)。

定义

[00115] 当用于本文时，术语"动物肉"指得自动物的肉、整块肌肉、或其部分。

[00116] 当用于本文时，术语"碎水果"指单个水果的果泥或多于一种水果的果泥混合物。

[00117] 当用于本文时，术语"碎肉"指从动物胴体重新获得(recover)的肉糊。带或不带骨的肉被强迫通过去骨装置，致使肉与骨分离并减小尺寸。

[00118] 当用于本文时，术语"碎蔬菜"指指单个蔬菜的菜泥或多于一种蔬菜的菜泥混合物。

[00119] 当用于本文时，术语"挤出物"指挤出的产物。在该上下文中，包含基本上对齐的蛋白纤维的植物蛋白制品在一些实施方案中可被挤出。

[00120] 当用于本文时，术语"纤维"指在进行实施例 2 详述的碎片特征试验之后长约 4 厘米和宽 0.2 厘米的植物蛋白制品。在该上下文中，术语"纤维"不包括营养类的纤维，所述营养类纤维例如大豆子叶纤维，并也不是指包含植物蛋白制品的基本上对齐的蛋白纤维的结构构成。

[00121] 当用于本文时，术语"面筋"指具有高含量蛋白质以及独特结构化质和粘附性质的在谷类粉末例如小麦中的蛋白部分。

[00122] 当用于本文时，术语"无面筋的淀粉"指各种淀粉制品例如改性的木薯淀粉。无面筋或基本上无面筋的淀粉由小麦、玉米、和木薯基淀粉制成。它们无面筋，因为它们不包含来自小麦、燕麦、黑麦或大麦的面筋。

[00123] 当用于本文时，术语"水合试验"测量水合已知量的蛋白质组合物所必需的分钟数。

[00124] 当用于本文时，术语"大碎片"是表征有色或无色的结构化植物蛋白制品的碎片百分比的方式。在实施例 2 中详述了碎片特征的测定。

[00125] 当用于本文时，术语"机械去骨的肉(MDM)"指使用可市购的设备从牛肉、猪肉和鸡肉骨重新获得的肉糊。MDM 是没有在完整肌肉中发现的天然纤维状质构的捣碎的产物。

[00126] 当用于本文时，术语"含水量"指在材料中的水分的量。材料的含水量可以通过 A. O. C. S. (American Oil Chemists Society)方法 Ba 2a-38 (1997)测定，该方法通过整体引用结合到本文中。

[00127] 本文所使用的术语"蛋白质含量"，例如，如大豆蛋白含量，指如通过以下方法所确定的材料的相对蛋白质含量：A.O.C.S. (American Oil Chemists Society) 法定方法 Bc 4-91(1997)、Aa 5-91(1997)、或 Ba 4d-90(1997)，各方法通过整体引用结合到本文中，该方法测定作为氨的材料样品的总氮含量，而蛋白质含量为样品总氮含量 6.25 倍。

[00128] 当用于本文时，术语"蛋白质纤维"指共同定义本发明植物蛋白制品结构的不同长度的单个连续的丝或不连续的长形碎片。另外，因为本发明的有色的和无色的结构化植物蛋白制品具有基本上对齐的蛋白纤维，所以蛋白纤维的排列将整块肌肉的质构赋予有色的和无色的结构化植物蛋白制品。

[00129] 当用于本文时，术语"剪切强度"测量质构化蛋白质形成具有足够高的强度以将类似肉的质构和外观赋予所形成的制品的纤维状网络的能力。剪切强度的测量单位为克。

[00130] 当用于本文时，术语"模拟的"指不含动物肉的动物肉组合物。

[00131] 当用于本文时，术语"大豆子叶纤维"指包含至少约 70%膳食纤维的大豆子叶的多糖部分。大豆子叶纤维通常包含一些较少量的大豆蛋白，但也可能是 100%的纤维。当用于本文时，大豆子叶纤维不指或不包括大豆外壳纤维。一般，大豆子叶纤维通过以下步骤形成：去除大豆的外壳和胚芽，压片(flake)或磨碎子叶并从压片或磨碎的子叶中去除油，和使大豆子叶纤维与大豆材料和子叶的糖类分离。

[00132] 当用于本文时，术语"大豆浓缩蛋白"是以不含水的大豆蛋白计，蛋白质含量为约 65%－小于约 90%的大豆材料。大豆浓缩蛋白也包含大豆子叶纤维，通常含有以无水重量来计算约 3.5%直至约 20%的大豆子叶纤维。大豆浓缩蛋白通过以下步骤由大豆形成：去除大豆的外壳和胚芽，压片或磨碎子叶并从压片或磨碎的子叶中去除油，和使大豆蛋白和大豆子叶纤维与子叶的可溶性糖类分离。

[00133] 当用于本文时，术语"大豆粉"指优选包含少于约 1%油的脱脂大豆材料的捣碎形式，由粒径能使颗粒可以通过 NO. 100 目(美国标准)筛的颗粒组成。使用常规的大豆研磨方法将大豆饼、薄片、压片、粗粉、或这些材料的混合物捣碎成大豆粉。以无水计算，大豆粉的大豆蛋白含量为约 49%－约 65%。优选粉末磨得非常细，最优选致使少于约 1%的粉末被截留在 300 目(美国标准)筛上。

[00134] 当用于本文时，术语"大豆分离蛋白"是以无水计算，蛋白质含量为至少约 90%大豆蛋白的大豆材料。通过以下步骤由大豆形成大豆分离蛋白：从子叶去除大豆的外壳和胚芽，压片或磨碎子叶并从压片或磨碎的子叶去油，使子叶的大豆蛋白和糖类与子叶纤维分离，接着使大豆蛋白与糖类分离。

[00135] 当用于本文时，术语"丝条"指在进行实施例 2 详述的碎片特征试验之后，尺寸为长约 2.5 - 约 4 厘米和宽大于约 0.2 厘米的植物蛋白制品。

[00136] 当用于本文时，术语"淀粉"指得自任何天然来源的淀粉。典型的淀粉源为谷类、根茎类、根类、荚果类、和水果类。

[00137] 当用于本文时，术语"以无水计算的重量"指干燥至完全去除所有水分(例如材料的水分含量为 0%)之后材料的重量。具体地讲，材料的以无水计算的重量可以通过将材料置于 45°C 烘箱直至材料达到恒重之后称重材料而获得。

[00138] 当用于本文时，术语"小麦粉"指由碾碎小麦而获得的粉末。一般而言，小麦粉的粒度为约 14 - 约 120 μm。

[00139] 包括以下实施例以阐述本发明的优选实施方案。本领域的技术人员应该理解的是：在以下实施例中所公开的技术代表由发明者揭示的、目的在于良好地开展本发明的实践的技术。然而，依照本公开，本领域的技术人员应该理解：在不脱离本发明的精神和范围下，在所公开的具体实施方案中可作出许多改变，并且还获得相似的或类似的结果，因此在附图中阐述或显示的所有事物被解释为说明性而不是限制性的。

实施例

[00140] 实施例 1-105 举例说明本发明的各种实施方案。

实施例 1 剪切强度的测定

[00141] 样品剪切强度以克为单位进行测量并可通过以下过程测定。称重结构化蛋白质制品样品并将它置于隔热的小袋中，用约 3 倍样品重量的室温自来水水合样品。将小袋抽真空至约 0.01 Bar 的压力，并密封小袋。允许样品水合约 12 - 约 24 小时。取出水合的样品并将它置于定向的质构分析仪基板上，致使质构分析仪的刀将切穿样品的直

径。进一步地，样品应该在质构分析仪的刀下定向，致使刀口垂直于质构片的长轴。用于切割挤出物的合适的刀为 TA-45 型，由 Texture Technologies (美国)制造的切刀片。进行该试验的合适的质构分析仪为 TA 型，由 Stable Micro Systems Ltd. (英国)制造的配有 25、50、或 100 千克测力计的 TXT2。在该试验的上下文中，剪切强度为刺穿(puncture through)样品所需的以克计算的最大的力。

实施例 2 碎片特征的测定

[00142] 用于测定碎片特征的方法可如下执行。仅使用整块碎片称重约 150 克的结构化蛋白质制品。将样品置入隔热的塑料袋中并添加约 450 克 25°C 的水。在约 150 mm Hg 下真空密封该袋，并允许内含物水合约 60 分钟。将水合的样品置入配有单个刀浆的 KM 14G0 型 Kitchen Aid 混合器的钵内，并在 130 rpm 下混合内含物两分钟。刮浆和钵的侧面，将刮下物放回钵的底部。重复混合和刮两次。从钵中取出约 200 g 的混合物。分离该混合物致使所有长于 2.5 cm 的纤维或长丝条与切碎混合物分离。称重从切碎混合物分选的纤维群，该重量除以起始重量(例如约 200 g)，并将该值乘以 100。这确定样品中大碎片的百分比。假如结果值低于 15%或高于 20%，那么结束试验。假如值为 15%－20%，然后从钵中称出另一约 200 g，使长于 2.5 cm 的纤维或长丝条从切碎混合物分离，再进行计算。

实施例 3 植物蛋白制品的生产

[00143] 以下挤出方法可用于制备本发明的有色的结构化植物蛋白制品。将以下添加至干共混混合容器：1000 千克(kg)Supro 620 (大豆分离物)、440 kg 小麦面筋、236 kg 小麦淀粉、34 kg 大豆子叶纤维、8 kg 磷酸二钙、和 2 kg L-半胱氨酸。混合内含物以形成干混的大豆蛋白混合物。然后将干混物转移至加料斗，干混物连同 480 kg 水一起从该加料斗引入预调料器，以形成调湿的大豆蛋白预混合物。然后按不大于

Case No.: IPR2023-00208
U.S. Patent No. 10,039,306

25 kg/分钟的速率将有调湿的大豆蛋白预混合物给料至双螺杆的挤出装置。挤出装置包含五个温度控制区，蛋白质混合物在第一区被控制至约 25°C，在第二区约 50°C，在第三区约 95°C，在第四区约 130°C，和在第五区约 150°C。挤出物受在第一区至少约 400 psig 直至在第五区约 1500 psig 的压力。经由与加热区相通的一个或多个注射口将 60 kg 水注入挤压机的筒中。

[00144] 将压模装置连接至挤压机，以以下方式布置：允许增塑的混合物从挤压机出口排入压模装置并随增塑的混合物内流过压模装置在它之中产生基本上对齐的蛋白纤维。

[00145] 当包含基本上对齐的蛋白纤维的挤出物挤出压模装置时，用刀切下并然后将切块干燥至约 10%重量的含水量。一经干燥，部分切块分成小碎片和较大碎片。共获得各尺寸的 25 个碎片。然后测量这些碎片并列于表 IV 中。

表 IV

样品编号	小碎片				大碎片	
	长(mm)	宽(mm)			长(mm)	宽(mm)
1	11	10			16	11
2	10	6			16	13
3	8	8			22	11
4	11	8			19	11
5	14	9			17	11
6	10	8			20	13
7	14	4			15	10
8	8	6			21	12
9	10	8			19	12
10	11	8			12	12
11	13	8			15	10
12	19	9			17	9

Motif Exhibit 1148, Page 2212 of 3341

Case No.: IPR2023-00208
U.S. Patent No. 10,039,306

13	12	9			11	10
14	14	6.5			14	10
15	10	7			14	10
16	10	7			17	12
17	10	6			15	13
18	12	8			14	14
19	10	7			19	12
20	9	6			18	10
21	10	8			14	12
22	9	5			19	12
23	10	7			12	11
24	11	9			16	10
25	9	8			16	9

平均值	11.0	7.4		平均值	16.3	11.2
标准差	2.3	1.4		标准差	2.8	1.3
最大值	19.0	10.0		最大值	22.0	14.0
最小值	8.0	4.0		最小值	11.0	9.0

实施例 4－94 植物蛋白制品的生产

[00146] 实施例 4-94 是实施例 3 的重复。下面的表 V 描绘实施例 3-94 的分析。

表 V

Motif Exhibit 1148, Page 2213 of 3341

实施例编号 #	较大的碎片%	剪切强度(g)	水合	密度(g/cc)
3	30.2	2150	80	0.27
4	24.2	2366	80	0.24
5	29.4	2341	60	0.30
6	26.0	2142	70	0.29
7	27.1	2291	70	0.28
8	32.7	2442	70	0.23
9	17.4	2668	70	0.27
10	26.1	2511	90	0.26

实施例编号 #	较大的碎片%	剪切强度 (g)	水合	密度(g/cc)
11	21.1	2260	80	0.28
12	22.3	2421	80	0.24
13	21.9	2490	75	0.28
14	22.4	2438	104	0.28
15	7.8	59	81	0.30
16	7.3	675	83	0.28
17	9.3	553	100	0.24
18	7.3	226	90	0.23
19	3.5	412	72	0.24
20	0.0	055	100	0.23
21	2.6	511	75	0.25
22	2.7	168	100	0.25
23	2.0	207	102	0.25
24	7.7	247	62	0.29
25	1.2	51	73	0.28
26	0.2	164	63	0.27
27	6.6	966	68	0.28
28	4.9	164	50	0.31
29	5.0	812	58	0.28
30	9.6	108	60	0.31
31	5.8	864	70	0.27
32	6.5	473	58	0.25
33	0.7	879	65	0.28
34	5.4	688	70	0.29
35	0.3	038	74	0.26
36	9.3	074	73	0.28
37	1.5	937	70	0.39
38	2.5	462	77	0.40

实施例编号 #	较大的碎片%	剪切强度(g)	水合	密度(g/cc)
39	0.1	051	66	0.28
40	7.9	384	54	0.31
41	8.1	064	58	0.28
42	9.2	158	60	0.27
43	0.0	834	58	0.28
44	6.8	202	58	0.28
45	2.8	363	57	0.26
46	3.9	361	57	0.28
47	6.9	293	103	0.25
48	6.3	205	73	0.28
49	9.0	286	53	0.29
50	2.6	206	63	0.25
51	0.5	125	63	0.31
52	5.5	290	55	0.29
53	8.2	274	55	0.26
54	1.5	205	42	0.33
55	1.3	185	55	0.31
56	1.8	969	40	0.30
57	9.1	028	55	0.31
58	7.2	598	63	0.37
59	8.3	869	60	0.31
60	9.7	044	50	0.29
61	7.6	216	52	0.28
62	5.0	001	53	0.28
63	8.1	096	45	0.27
64	9.0	796	53	0.27
65	0.0	924	51	0.27
66	3.7	295	51	0.28

实施例编号 #	较大的碎片%	剪切强度(g)	水合	密度(g/cc)
67	7.4	259	50	0.29
68	9.2	204	43	0.28
69	5.3	059	38	0.31
70	6.1	284	70	0.32
71	3.6	085	70	0.30
72	5.6	279	44	0.28
73	3.7	170	44	0.32
74	1.2	128	49	0.29
75	2.4	068	50	0.29
76	0.1	939	40	0.30
77	8.7	592	50	0.30
78	9.6	812	68	0.28
79	5.2	848	64	0.28
80	3.6	973	70	0.30
81	3.7	078	66	0.36
82	5.6	940	44	0.31
83	8.5	339	33	0.29
84	0.2	366	50	0.24
85	8.1	425	40	0.29
86	9.6	122	59	0.27
87	7.5	193	56	0.16
88	1.1	186	56	0.28
89	2.4	061	56	0.27
90	1.3	143	50	0.27
91	4.4	108	54	0.26
92	9.9	101	53	0.30
93	2.3	551	55	0.25
94	4.3	164	57	0.28

Case No.: IPR2023-00208
U.S. Patent No. 10,039,306

实施例编号 #	较大的碎片%	剪切强度 (g)	水合	密度(g/cc)
第 1 四分位数	2.6	045	53	0.27
中值	6.5	164	60	0.28
第 3 四分位数	0.2	291	70	0.30
平均值	6.6	156	63	0.28

实施例 95 蛋白质组合物的生产

[00147] 将约 10°C (50°F)的 3625 克自来水添加至混合容器，搅拌时添加 1160 克干燥、低水分(约 7% - 约 12%)大豆蛋白组合物(标识为 FXP MO339，得自 Solae, LLC, St. Louis, MO)直至大豆蛋白组合物被水合且纤维被分离，所述大豆蛋白组合物包含大豆分离蛋白、大豆子叶纤维、小麦面筋和淀粉。将 5216 克含水量为至少约 50%的机械去骨的碎鸡肉添加至混合器。使机械去骨的鸡肉处于约 2°C (36°F) - 约 4°C (39°F)的温度。混合内含物直至获得均质的重组肉制品。将重组肉制品转移至 Hollymatic 成形机器，在其中使重组肉制品成形，变成肉排或肉片，然后冷冻。

[00148] 重复实施例 3 的操作，不同之处为：用 3175 克水水合含大豆分离蛋白、大豆子叶纤维、小麦面筋和淀粉的 1500 克非干燥低含水量(约 28 - 约 35%)的大豆蛋白质组合物。将重组肉制品转移至填料机器，在其中重组肉制品被填入不能渗透的肠衣内，然后冷冻。填料机器可得自多个制造商，包括但不限于位于 Elk Grove Village, I11.的 HITEC Food Equipment, Inc.、位于 Des Moines, Iowa 的 Townsend Engineering Co.、位于 Canton, Mass.的 Robert Reiser & Co., Inc.、和位于 Buffalo Grove, I11.的 Handtmann, Inc.。

实施例 97

Motif Exhibit 1148, Page 2218 of 3341

[00149] 将约 12°C (54°F)的 2127 克自来水加至第一混合容器，搅拌时加入 1000 克干燥、低含水份(约 7% - 约 12%)的大豆蛋白组合物，直至大豆蛋白组合物被水合且纤维被分离。然后将 43 克焦糖着色剂添加至水合的大豆蛋白组合物。在约 2°C(36°F)下，添加 4500 克含水量为约 50%的机械去骨的碎鸡肉。然后添加 100 克氯化钠和 30 克三聚磷酸钠以提取/溶解用于结合的经捣碎肉中的肌原纤维蛋白质。当继续混合时，添加 500 克牛肉脂肪和 100 克牛肉香料并继续混合。在第二混合容器中，使 Supro® 620 的 600 克凝胶蛋白在 1000 克水中水合，并添加至第一混合容器。混合内含物直至获得同质的重组肉制品。将重组肉制品转移至 Hollymatic (Hollymatic Corp., Park Forest IL)成形机器，在其中使重组肉制品成形为肉饼，然后冷冻。

实施例 98

[00150] 将约 10°C (50°F)的 3000 克自来水添加至混合容器，搅拌时添加 1500 克由 Supro® 620 制备的大豆蛋白挤出物，直至大豆蛋白挤出物被水合，并通过切碎而分离纤维。将 5000 克含水量为至少约 50%的机械去骨的碎鸡肉加至混合器。使机械去骨的鸡肉处于约 2°C (36°F) - 约 4°C (39°F)的温度。混合内含物直至获得同质的重组肉制品。将重组肉制品转移至 Hollymatic 成形机器，在其中使重组肉制品成形为肉排或肉片，然后冷冻。

实施例 99

[00151] 重复实施例 98 的操作，不同之处为：水合并切碎的大豆蛋白组合物包含大豆分离蛋白、大米粉、和无面筋的淀粉。

实施例 100

[00152] 重复实施例 98 的操作，不同之处为：水合并切碎的大豆蛋白组合物包含大豆分离蛋白和大米粉。

实施例 101

[00153] 重复实施例 98 的操作，不同之处为：水合并切碎的大豆蛋白组合物包含大豆分离蛋白和无面筋的淀粉。

实施例 102

[00154] 重复实施例 98 的操作，不同之处为：水合并切碎的大豆蛋白组合物包含大豆分离蛋白、小麦粉和淀粉。

实施例 103

[00155] 重复实施例 98 的操作，不同之处为：水合并切碎的大豆蛋白组合物包含大豆分离蛋白和大豆子叶纤维。

实施例 104

[00156] 重复实施例 98 的操作，不同之处为：水合并切碎的大豆蛋白组合物包含大豆分离蛋白、大豆子叶纤维和小麦面筋。

实施例 105

[00157] 将约 10°C (50°F)的 3383 克自来水添加至混合容器，搅拌时添加 1208 克干燥、低水分(约 7% - 约 12%)的标识为 SUPROMAX® 5050 的大豆蛋白挤出物，直至大豆蛋白挤出物被水合，并通过切碎而分离纤维。将 3340 克含水量为至少约 50%的机械去骨的捣碎鸡肉与 3383 克脂肪含量为约 10%的 1/2 英寸绞碎的牛肉添加至混合器。在约 2°C (36°F) - 约 4°C (39°F)下绞碎机械去骨的鸡肉和牛肉。也添加各种着色剂和风味剂：盐、异抗坏血酸盐、亚硝酸钠、葡萄糖、破碎的黑胡椒、肉豆蔻、肉豆蔻皮、蒜粒、芫荽、红辣椒、和再水合的 LHP 起子培养物。混合内含物直至获得同质的重组肉制品。然后将重组肉制品成形为肉棒。

[00158] 虽然以与本发明有关的优选实施方案解释了本发明，但应理解：本领域的技术人员通过阅读本说明书将明白其各种修改。因此，

Case No.: IPR2023-00208
U.S. Patent No. 10,039,306

应理解：本文所公开的发明有意涵盖落入所附权利要求范围内的修改。

Motif Exhibit 1148, Page 2221 of 3341

图1

Case No.: IPR2023-00208
U.S. Patent No. 10,039,306

图2

Motif Exhibit 1148, Page 2223 of 3341

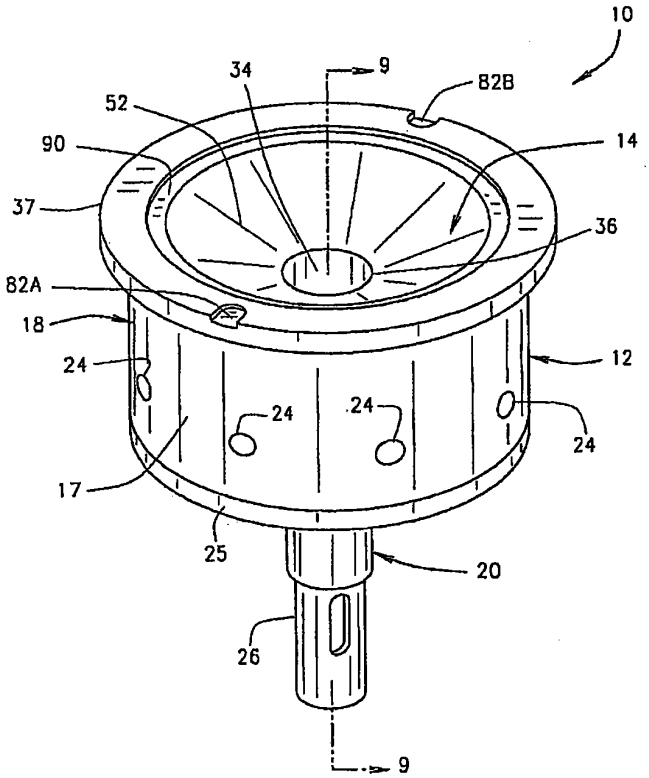

图 3

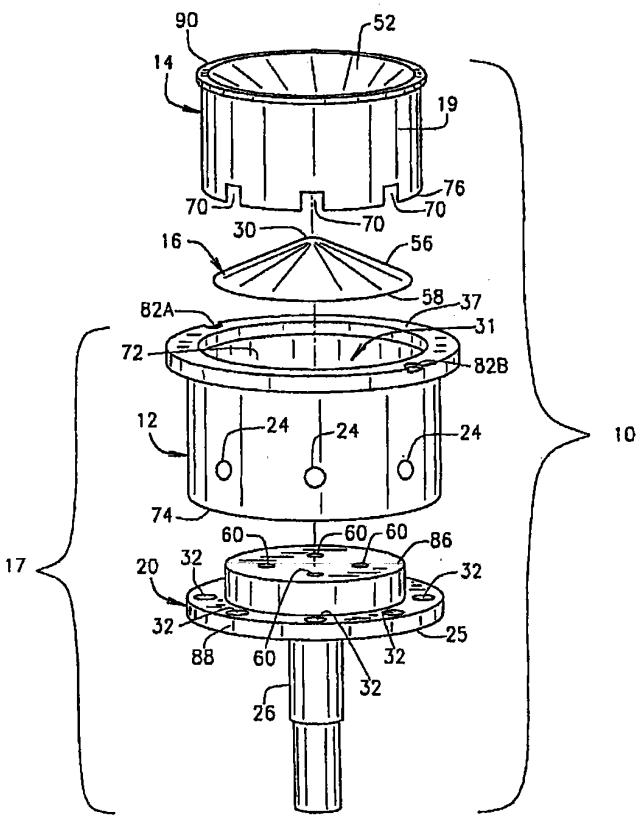
90
52
14
19
76
70
70
70
30
16
56
58
37
82A
31
72
82B
12
24
24
24
10
74
60
60
60
86
17
20
32
32
32
25
88
60
32
32
26

图 4

Case No.: IPR2023-00208
U.S. Patent No. 10,039,306

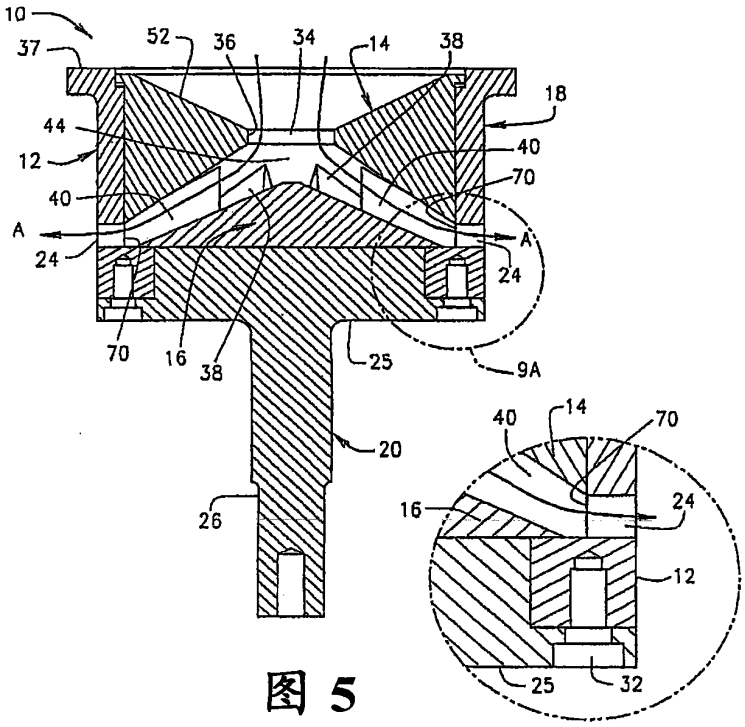

图 5

图 5A

Motif Exhibit 1148, Page 2226 of 3341

Espacenet

Bibliographic data: CN101861895 (A) — 2010-10-20

Method for preparing novel fermented soybean milk products

Inventor(s): RUIXIA GU; CAIPING LIU; YIN XU ± (GU RUIXIA, ; LIU CAIPING, ; XU YIN)

Applicant(s): UNIV YANGZHOU ± (YANGZHOU UNIVERSITY)

Classification: **- international:** ***A23C11/10; A23C20/02; C12N1/20;*** *C12R1/225*
- cooperative:

Application number: CN20101139465 20100406 Global Dossier

Priority number(s): CN20101139465 20100406

Also published as: CN101861895 (B)

Abstract of CN101861895 (A)

The invention relates to a method for preparing novel fermented soybean milk products, such as fermented soybean milk, fermented mixed soybean milk, fermented dried tofu and the like, which prepares the produces such as soybean milk, fermented mixed soybean milk, dried tofu or dried tofu paste and the like by obtaining lactic acid bacteria by using vitality of alpha acetolacetate decearboxylase (ALDC) as an index and fermenting soybean milk or mixed milk containing the soybean milk by using one ore more lactic acid bacteria. The prepared products have a good flavor and are easy to be accepted by consumers.

(19)中华人民共和国国家知识产权局

(12)发明专利申请

(10)申请公布号 CN 101861895 A
(43)申请公布日 2010.10.20

(21)申请号 201010139465.7

(22)申请日 2010.04.06

(83)生物保藏信息
CGMCC NO:3622 2010.02.01

(71)申请人 扬州大学
地址 225009 江苏省扬州市大学南路 88 号

(72)发明人 顾瑞霞 徐寅 刘彩平

(74)专利代理机构 南京知识律师事务所 32207
代理人 卢亚丽

(51)Int.Cl.
A23C 11/10(2006.01)
A23C 20/02(2006.01)
C12N 1/20(2006.01)
C12R 1/225(2006.01)

权利要求书 1 页 说明书 10 页

(54)发明名称

一种新型发酵豆乳制品的制备方法

(57)摘要

本发明涉及一种新型发酵豆乳制品，如发酵豆乳、发酵混合豆乳、发酵豆干等制备方法，即利用 α 乙酰乳酸脱羧酶(ALDC)活力作为指标，获得乳酸菌以一种或多种乳酸菌作为发酵剂发酵豆乳或含豆乳的混合乳，制备成发酵豆乳、发酵混合豆乳、豆干或豆干酪等产品，风味良好，易为消费者接受。

CN 101861895 A

1. 一种新型发酵豆乳制品的制备方法，其特征在于，对蛋白质重量百分含量在1.5%-6.0%的豆乳基质在95℃进行20min的热处理后，用α-乙酰乳酸脱羧酶的活力大于0.1000μmol/mL的乳酸菌进行发酵，使其凝固，制备发酵豆乳。

2. 根据权利要求1所述的新型发酵豆乳制品的制备方法，其特征在于，是将对凝乳进行处理，加工成豆干或豆干酪。

3. 根据权利要求1或2所述的新型发酵豆乳制品的制备方法，其特征在于，豆乳基质中大豆蛋白含量占豆乳基质总蛋白质的15%-90%，且至少添加10%-85%的牛奶，或1%-2%的奶粉，或添加0.5%-2%的乳清粉。

4. 根据权利要求3所述的新型发酵豆乳制品的制备方法，其特征在于在豆乳基质或发酵豆乳中添加糖、盐、奶油或人造油，制备成发酵豆乳、豆干或豆干酪等发酵豆制品。

一种新型发酵豆乳制品的制备方法

技术领域

[0001] 本发明属于食品加工领域，具体涉及一种新型发酵豆乳制品的制备方法。

技术背景

[0002] 随着人们生活水平的提高，普通的日常饮食并不能满足人们的需求，各种功能保健食品倍受人们的关注。大豆蛋白是一种优质的完全蛋白质。由于大豆蛋白的营养性和功能性，以豆乳全部或部分替代牛乳生产各种豆乳制品，为广大消费者所接受。

[0003] 大豆蛋白含有人体所必需的各类氨基酸，尤其是人体不能合成的赖氨酸、色氨酸等，除含硫氨基酸（半胱氨酸和蛋氨酸）外，其它营养成分均为均衡的，在氨基酸组成平衡胜过其它豆类、油料作物、谷类作物和棉籽；其生物学价值平均含有 96 个标准单位，同肉、蛋和奶的蛋白质相似，是植物中唯一类似于动物蛋白的“完全”蛋白质，因此极易被人所体收，且没有动物性蛋白质的副作用，如引发肥胖症、心血管病和高胆固醇症等。研究表明，人们进食动物性食品过多，是造成导致心血管病、脑血管病、肥胖症、糖尿病等所谓“文明病”增加的原因之一，营养学家认为，增加植物性蛋白，特别是大豆蛋白的食用量，是解决这一问题的一条行之有效的途径。此外大豆蛋白还能解除因重金属盐、生物碱等引起的中毒、降低血液中的低密度脂蛋白、减少身体内钙的损失等重要生理功能。

[0004] 双乙酰是由柠檬酸利用微生物包括乳酸乳球菌属中双乙酰亚种、明串珠菌、乳杆菌在发酵中形成的。在通常条件下，柠檬酸发酵和双乙酰形成仅出现在含有编码运输和代谢柠檬酸的乳酸菌中。在乳制品的乳酸菌中，柠檬酸利用最常与若干种明串珠菌和筛选的乳球菌亚种联系在一起，已发现在发酵柠檬酸的菌中含有编码运输柠檬酸基因的质粒。双乙酰是酸豆乳发酵过程中乳酸菌柠檬酸代谢过程里的一种重要副产物。当其超过一定风味阈值时，就会给酸豆乳带来不良口味，从而影响酸豆乳的质量。α－乙酰乳酸能从乳酸菌细胞中渗出，在细胞外经非酶促氧化脱羧产生双乙酰，双乙酰具有令人不愉快的饭嗖味，影响酸豆乳风味。双乙酰经过双乙酰还原酶将其还原为乙偶姻（acetoin，3-羟基-2-丁酮），再进一步由 3-羟基-2-丁酮还原酶还原为 2，3-丁二醇。a-乙酰乳酸脱羧酶（a-acetolactatedecarboxylase，ALDC）催化 a-乙酰乳酸脱羧酶脱羧形成乙偶姻和二氧化碳，不经过双乙酰形成途径。在双乙酰形成与消除这两步反应中，前体物质 α－乙酰乳酸的氧化脱羧反应速率比双乙酰的还原反应速率慢 10 倍之多。这样 α－乙酰乳酸的去除反而成了双乙酰去除速率的限制步骤。因此如何控制好的酸豆乳中双乙酰的含量，就要控制好乳酸菌柠檬酸的代谢。α－乙酰乳酸脱羧酶能催化 α－乙酰乳酸直接脱羧生成乙偶姻和二氧化碳，有利于改善酸豆乳的风味，从而改善酸豆乳的品质。

[0005] 酸豆奶是以大豆和新鲜牛奶（或奶粉）为主要原料，经乳酸菌发酵制成含活性乳酸菌的保健食品，其将动物蛋白和植物蛋有效地结合，提高了蛋白质的消化利用率。酸豆奶将豆奶的营养与乳酸菌的保健集于一体，克服了豆奶酸味不足，品种单一的缺点，同时由于乳酸菌的作用，使产品风味更加柔和。酸豆奶不含胆固醇和乳糖，与酸牛奶相比更适合老年人和儿童饮用，是一种优质植物动物复合蛋白乳酸发酵食品。

[0006] 因此利用高产 ALDC 的乳酸菌生产一种大众普遍接受的酸豆奶及其相关产品具有很好的应用价值。本发明以高 ALDC 活性的乳酸菌对豆乳进行发酵，生产出一种营养丰富、风味良好、易为消费者接受的酸豆乳。

发明内容

[0007] 为了克服现有技术的不足，本发明提供了一种新型发酵豆乳制品的制备方法。利用人们尚未发现的具有较高 ALDC 活性的乳酸菌单一或混合发酵来制备口感好的含豆乳发酵制品，可以消除发酵豆乳中表现出来的饭馊味。

[0008] 本发明方法是全部使用具有较高 ALDC 活力的乳酸菌进行发酵，发酵豆乳风味良好，易为消费者接受。具体的操作是：对蛋白质重量百分含量在 1.5％-6％的豆乳基质进行 95℃杀菌 20min 的热处理后，用 α 乙酰乳酸脱羧酶的活力大于 0.1000μmol/mL 的乳酸菌进行发酵，使其凝固，制备发酵豆乳；或是将对凝乳进行处理，加工成豆干或豆干酪。

[0009] 本发明还提供一种筛选能用于本发明的具有高产 ALDC 的乳酸菌乳酸菌的方法，具体而言，它采用下述步骤制得：(1) 从传统乳制品及天然发酵食品中分离获得乳酸菌；(2) 对分离获得的乳酸菌比较其 ALDC 活力，选择 ALDC 活力大于 0.1000μmol/mL 的乳酸菌用于本发明的发酵。

[0010] 经热处理的豆乳或含豆乳的混合乳，利用乳酸脱氢酶活力较高的乳酸菌作为发酵剂发酵后，添加或不添加其它食品添加物，直接制成发酵豆乳或经过适当加工处理后制成豆干或豆干酪等产品，其产品特征在于，风味良好，易为消费者接受。

具体实施方式

[0011] 本发明提供具有较高 ALDC 活性的乳酸菌作为发酵剂，用于豆乳基质发酵，具有消除发酵豆乳中的饭馊味的功能，使制备的发酵豆乳风味良好，易为消费者接受。

[0012] 具体而言，包括以下几个方面：

[0013] 1. 样品采集

[0014] 本发明样品来源主要是新疆、云南、四川、江苏等地民族传统乳制品及天然发酵食品，如酸奶酒、酸马奶酒、泡菜等，将样品采集后放入事先准备好的缓冲溶液中，冷藏，2 天之内对样品进行分离。

[0015] 2. 乳酸菌分离与鉴定

[0016] 将新疆、云南、四川、江苏等地民族传统乳制品及天然发酵食品采用 PTYG 培养物于 37℃培养 24 小时后。将该培养物涂布在 PTYG 琼脂平板上，然后在 37℃培养 3 天，挑取单菌落，并进一步纯化，用其检测细菌特征，如下文所述的革兰氏染色，在生理生化基础上进一步进行 API 鉴定及 16SrDNA 序列测定结果鉴别出上述细菌是乳酸菌。

[0017] 将分离获得的菌株用含 11％脱脂乳的培养物培养后，加入保护剂，冻干、保存在 -18℃，然后用于各种检测细菌特征的试验。

[0018] 3. ALDC 活力的测定

[0019] 标准曲线的绘制：分别吸取 800μM 的 3-羟基-2-丁酮（乙偶姻）0、20、40、60、80、100、120、140μL，加水补足至 1000μL，加入 200μl 5％ α-萘酚（溶于 2.5mol/L 的 NaOH 中）和 200μL 0.5％的肌酸，室温显色 1h，522nm 比色测 OD 值。其数据回归处理，以乙偶姻

的量为横坐标，OD 值为纵坐标，绘制标准曲线。

[0020] 菌株的活化：将分离到的菌株接种于新配制灭菌后的 12％脱脂乳培养基中，混匀后置 42℃培养箱中培养，活化 3 代。

[0021] 发酵液制备：各取活化后的菌株 3％接种到 10mLMRS 试管中培养 3 代，将第 3 代乳酸菌菌种按 3％的量接入装有 50mLMRS 培养基的三角瓶中培养。

[0022] 粗酶液制备：将上述发酵液于 4℃，5000r/min 离心 20min 收集菌体，用 0.85％的 NaCl 溶液洗涤，并离心。所得菌体用 pH6.0，0.03mol/L 柠檬酸－磷酸盐缓冲液悬浮，在冰浴中用超声波（200w）间断处理 7min，至绝大多数菌体破碎为止，离心除去细胞碎片，所得上清液为粗酶液。

[0023] 测定方法：反应总体积 400μL，其中 200μL 为新配制底物 α－乙酰氧基－α－甲基－乙酰乙酸乙酯，用 200μLpH6.0 的 0.03mol/L 柠檬酸－磷酸盐缓冲液适当稀释的酶样，置于 30℃水浴 20min；加入 4.6mL 显色剂（0.1％肌酸，1％ α－萘酚，溶 1mol/LNaOH 溶液中，临用前配），于 15 ～ 20℃下显色 50min，在 721 型分光光度计上于 522nm 处测吸光度，根据吸光度计算酶活单位。一个酶活单位定义为：在 30℃，pH6.2 条件下，由 α－乙酰乳酸脱羧酶脱羧，每分钟产生 1μmol 乙偶姻的酶量。

[0024] 酶活的计算公式

[0025] U ＝ OD×0.00113494×F×T/H

[0026] OD：样品在 522nm 处测得的值；

[0027] 0.00113494：将结果换算成 μmol/min 的常数；

[0028] F：样品被稀释的倍数；

[0029] T：样品的总体积；

[0030] H：标准曲线斜率

[0031] 从新疆、云南、四川、江苏等地采集的民族传统乳制品及天然发酵食品，如酸奶酒、酸马奶酒、泡菜等分离获得的 106 株乳酸菌，ALDC 活性大于 0.1000μmol/mL 的占 13.19％，ALDC 活性在 0.0065-0.1000μmol/mL 之间的占 56.43％，ALDC 活性小于 0.0065μmol/mL 的占 30.38％。

[0032] 4. 发酵豆乳试验

[0033] 选取 9 株酶活大于 0.1000μmol/mL、3 株酶活在 0.0065-0.1000μmol/mL 之间、3 株酶活小于 0.0065μmol/mL 乳酸菌共 15 株菌进行发酵豆乳试验。结果如表 1。

[0034] grx90 为本实验室分离的菌株，于 2010 年 2 月 1 日保藏于中国微生物菌种保藏管理委员会普通微生物中心，地址：北京市朝阳区大屯路，中国科学院微生物研究所；分类命名为：嗜热链球菌（Streptococcus thermophilus），保藏号为 CGMCCNo：3622。表 1 中的其他乳酸菌可从申请人实验室获取。XN53、AM1、CM1、AP3、BM5、ST、qy（ST- 日）3 球见杨旭（乳酸菌 rep-PCR 分子鉴别及其与体外细胞的相互作用，扬州大学硕士研究生论文，2009）；白杆见王慧晶（对酒精肝损伤具有保护作用的乳酸菌筛选，扬州大学硕士研究生论文，2008）；BB-16、P971P11、XPL-1、BP2、西草 2 杆、西原 1 球见刘彩平（酸豆乳专用乳酸菌的筛选及应用研究，扬州大学硕士研究生论文，2010）。

[0035] 表 1 单菌株发酵豆乳试验

[0036]

菌株	ALDC/ μmol/mL	凝乳时间 /h	酸度 /° T	Cfu/mL	感官评价
grx90	0.1542	4.5	64	1.7×10^{8}	色乳白,香气自然,无乳清,口感细腻
$XN_5$3	0.1324	5.1	63	1.06×10^{9}	色微暗,弱豆味,少量乳清,口感细腻
BB-16	0.1123	17	60	5.3×10^{8}	色暗红,弱豆味,少量乳清,口感细腻
AM1	0.1121	5.1	54	3.2×10^{8}	色暗红,弱豆味,少量乳清,口感细腻
CM1	0.1121	5.5	57	1.9×10^{8}	色微暗,弱豆味,无乳清,口感细腻
BM5	0.1070	5.5	60	7.1×10^{8}	色暗红,弱豆味,少乳清
白杆	0.1043	14	63	4.5×10^{8}	色微暗,弱豆味,少乳清
AP3	0.1020	5.5	51	5.3×10^{8}	色暗红,微涩,无乳清,无异味
P971P11	0.1000	4.6	52	1.01×10^{9}	色乳白,微涩,无乳清,弱豆味
ST	0.0934	5.5	45	1.58×10^{8}	色乳白,弱豆腥味,微涩
西草 2 杆	0.0087	13	47	3.1×10^{6}	色微暗,凝乳不均匀,豆腥味,少乳清
XPL-1	0.0069	7.6	35	7.7×10^{7}	色暗,豆腥味,少量乳清,微涩

Motif Exhibit 1148, Page 2233 of 3341

Case No.: IPR2023-00208
U.S. Patent No. 10,039,306

Case No.: IPR2023-00208
U.S. Patent No. 10,039,306

菌株	ALDC/μmol/mL	凝乳时间/h	酸度/°T	Cfu/mL	感官评价
BP2	0.0046	10	30	1.3×10^{7}	色暗,乳清析出,豆腥味,气味酸
西原1球	0.0005	3.8	27	1.9×10^{7}	凝乳不均与,色暗,有异味
qy(ST-日)3球	0.0003	4.1	20	1.21×10^{7}	色暗,凝乳不均匀,重豆腥味,涩口

[0037] 从上表可以看出不同酶活的乳酸菌发酵的酸豆乳在滴定酸度和感官方面有很大的差异。酶活大于0.1000μmol/mL的菌株发酵的酸豆乳在色泽,气味,表观和口感方面都优于酶活低于0.1000μmol/mL的菌株,特别是酶活小于0.0065μmol/mL的菌株发酵的酸豆乳不仅表观差,还具有令人难以接受的异味。酶活大于0.1000μmol/mL的菌株适合做发酵豆乳的发酵剂。

Motif Exhibit 1148, Page 2234 of 3341

[0038] 下述实施例阐述了本发明的实践和目前优选的实施方式。

[0039] 但是，应理解，本领域熟练的技术人员在考虑到本公开内容之后可在本发明的精神和范围内作出改动和改进。

[0040] 实施例 1、高产 ALDC 乳酸菌的筛选及鉴定

[0041] 将分离的乳酸菌按 3％的接种量接入 50mL MRS 培养基中培养→发酵液于 4℃，5000r/min 离心 20min 收集菌体→ 0.85％的 NaCl 溶液洗涤，并离心→ Ph6.0 柠檬酸－磷酸盐缓冲液悬浮进行超声波细胞破碎→离心得上清为所要酶液→ 200μL 新配制底物 α－乙酰氧基－α－甲基－乙酰乙酸乙酯 +200μL 酶液 30℃水浴 20 分钟后加入显色剂→ 15-20℃显色 50 分钟，于 522nm 处测吸光度。对所获得的高产 ALDC 活性的乳酸菌进行 API 鉴定。表 1 中 15 株乳酸菌（grx90、$XN_5$3、BB-16、AM1、CM1、BM5、白杆、AP3、P971P11、ST、西草 2 杆、XPL-1、BP2、西原 1 球、qy(ST- 日)3 球 ）的 API 鉴定见表 2 和 3。鉴定结果为 ：grx90、CM1 为嗜热链球菌 ；$XN_5$3、ST、AM1、BM5、P971P11、BP2 屎肠球菌 ；AP3、西原 1 球、qy(ST- 日)3 为巴黎链球菌 ；BB-16、西草 2 杆为瑞士乳杆菌 ；白杆、XPL-1 为鼠李糖乳杆菌。

[0042] 表 2 乳酸菌分离株的 API20ATREP 鉴定结果

[0043]

编号	发酵管	分离株										
		grx90	$XN_5$3	AM1	CM1	BM5	AP3	P971P11	ST	BP2	西原 1 球	qy(ST-日)3 球
1	VP	+	+	+	+	+	+	+	+	+	+	+
2	HIP	+	+	-	+	-	-	-	-	-	-	-
3	ESC	-	+	+	-	+	+	+	+	+	+	+
4	PYRA	-	+	+	-	+	-	+	+	+	-	-
5	αGAL	-	+	+	-	+	+	+	+	+	+	+
6	GUR	-	-	-	-	-	-	-	-	-	-	-
7	βGAL	-	+	+	-	+	-	+	+	+	-	-
8	PAL	-	-	-	-	-	-	-	_	-	-	-
9	LAP	+	+	+	+	+	+	+	+	+	+	+
10	ADH	-	+	+	-	+	-	+	+	+	-	-
11	RIB	-	+	+	-	+	-	+	+	+	-	-
12	ARA	-	+	+	-	-	-	-	+	-	-	-
13	MAN	-	+	+	-	+	-	-	+	+	+	-
14	SOR	-	-	-	-	-	-	-	-	-	-	-
15	LAC	+	+	+	+	+	+	+	+	+	+	+
16	TRE	-	+	+	-	+	-	+	+	+	+	-
17	INU	-	-	-	-	-	+	-	-	-	+	+
18	RAE	-	-	-	-	-	+	-	-	-	+	+
19	ADM	-	-	+	-	+	+	+	+	+	+	+
20	GLGY	-	-	-	-	-	+	-	-	-	+	+
21	HEM	-	-	-	-	-	-	-	-	-	-	-
ID%		98.5	99.3	98.8	99.3	99.2	99.2	99.8	99.2	99.2	98.9	99.9

[0044] 表 3 乳酸菌分离株的 API50HCL 鉴定结果

[0045]

编号	发酵管	分离株			
		BB-16	白杆	西草 2 杆	XPL-1
1	CTRL	-	-	-	-
2	GLY	-	-	-	-
3	ERY	-	-	-	-
4	DARA	-	+	-	-
5	LARA	-	-	+	+
6	RIB	-	+	+	+
7	OXYL	-	-	-	+
8	LXYL	-	-	-	-
9	ADD	-	-	-	-
10	MDX	-	-	-	-
11	GAL	+	+	+	+
12	GLU	+	+	+	+
13	FRU	+	+	+	+
14	MNE	+	+	+	+
15	BBE	-	+	+	+
16	RHA	+	+	+	+
17	DUL	-	-	-	-
18	INO	-	+	-	+
19	MAN	-	+	+	+
20	SOR	-	+	+	+
21	MDM	+	+	+	+
22	MDO	-	-	-	-
23	NAO	+	+	-	+
24	AMY	+	+	+	+
25	ARB	-	+	+	+
26	ESC	-	+	+	+
27	SAL	+	+	-	+
28	CEL	+	+	+	+
29	MAL	+	+	+	+
30	LAC	+	+	-	+
31	MEL	+	-	+	+
32	BAC	+	+	+	+
33	TRE	+	+	+	+
34	INU	-	-	-	-
35	MLZ	-	+	+	+
36	RAF	-	-	+	-
37	ADM	-	-	+	+

[0046]

38	GLYD	-	-	+	+
39	XLT	-	-	-	-
40	GEN	+	+	-	+
41	TUR	-	-	+	-
42	LYX	-	-	+	-
43	TAG	-	+	+	+
44	DFUC	-	-	+	-
45	LFUC	-	+	+	-
46	DARA	-	-	-	-
47	LARL	-	-	+	-
48	ONT	-	+	+	-
49	2KG	-	-	-	-
50	5KG	-	-	-	-
ID%		98.8	99.9	99.9	98.9

[0047] 实施例 2、混合菌株发酵豆乳试验

[0048] 选取 9 株酶活大于 0.1000μmol/mL 的乳酸菌经过组合后进行发酵豆乳试验。结果如下表：

[0049] 表 4 混合菌株发酵豆乳试验

[0050]

编号	ALDC/ μmol/mL	凝乳时间 /h	酸度 /° T	Cfu/mL	感官评价
H1	0.1572	4.5	69	7.1×10^{8}	色乳白，香气自然，无乳清，口感细腻
H2	0.1394	4.5	69	5.9×10^{8}	色微暗，弱豆乳香，无乳清，口感细腻
H3	0.1223	5.7	68	5.3×10^{8}	色白，弱豆味，无量乳清，口感细腻
H4	0.13181	4.5	64	3.8×10^{8}	色微红，豆香，少量乳清，口感细腻
H5	0.1221	5.1	65	2.5×10^{8}	色微暗，豆香，无乳清，口感细腻
H6	0.1470	4.5	69	1.1×10^{9}	色暗红，香气自然，少乳清，口感细腻
H7	0.1143	6.5	62	4.8×10^{8}	色微暗，弱豆香，少乳清，口感细腻
H8	0.1080	5.5	61	5.6×10^{8}	色暗红，弱豆香，无乳清，口感细腻
H9	0.1233	4.3	50	9.2×10^{8}	色乳白，无乳清，弱豆味
H10	0.1134	4.5	55	3.4×10^{8}	色乳白，弱豆腥味、无乳清

编号	ALDC/ μmol/mL	凝乳时间/h	酸度/° T	Cfu/mL	感官评价
H11	0.1087	5.8	57	2.1×10^{8}	色微暗,弱豆腥味,少乳清
H12	0.1069	5.6	59	3.7×10^{9}	色微暗,弱豆腥味,少量乳清
H13	0.1106	5.5	56	3.3×10^{7}	色微暗,少乳清析出,弱豆腥味
H14	0.1109	4.0	52	2.3×10^{7}	色微暗,凝乳均匀,弱豆味、微涩口
H15	0.1183	4.1	52	1.25×10^{7}	色微暗,凝乳均匀,弱豆腥味,微涩口

[0051] 注:H1-H8 分别为 grx90 与 $XN_5$3、BB-16、AM1、CM1、BM5、白杆、AP3、P971P11 混合发酵的酸豆乳;H9-H12 分别为 $XN_5$3 与 CM1、BM5、白杆、P971P11 混合发酵的酸豆乳;H13-H15 分别为 AM1 与白杆、AP3、P971P11 混合发酵的酸豆乳。

[0052] 从表 1 可以看出不同酶活的乳酸菌发酵的酸豆乳在滴定酸度和感官方面有很大的差异。酶活大于 0.1000μmol/mL 的菌株发酵的酸豆乳在色泽,气味,表观和口感方面都优于酶活低于 0.1000μmol/mL 的菌株,特别是酶活小于 0.0065μmol/mL 的菌株发酵的酸豆乳不仅表观差,还具有令人难以接受的异味。酶活大于 0.1000μmol/mL 的菌株适合做发酵豆乳的发酵剂。

[0053] 从表 4 和表 1 可以看出混合菌株发酵的酸豆乳的凝乳时间较单菌株发酵的酸豆乳有所减短,并且混合菌株发酵的酸豆乳在色泽、气味、口感方面都优于单菌株发酵的酸豆乳。

[0054] 实施例 3、酸豆乳的制作方法

[0055] 精选黄豆→0.25%的 $NAaHCO_3$ 浸泡 14h →清水洗两次→ 1 : 8 的比例用热水(85℃左右)磨浆→煮浆→加入 8%的白砂糖和 3%的全脂乳粉→均质(15-20MPa)→灭菌(90-95℃,15 分钟)→冷却 42℃左右接入 3%酶活大于 0.1000μmol/mL 乳酸菌→ 42℃恒温发酵 4h 至 pH 值为 4.3 ~ 4.6 →放入 4℃冰箱过夜即制成凝固型酸豆乳。发酵结束后经搅拌,添加果酱果汁等,冷藏,即制成搅拌型酸豆乳。

[0056] 实施例 4、乳酸菌饮料的制作方法

[0057] 按应用实施例 1 制备好酸乳,将酸乳用杀菌并冷却的水、糖浆、乳化稳定剂等混合物稀释 3-4 倍左右,制成可直接饮用的酸豆乳饮料。

[0058] 实施例 5、发酵豆干的制作方法

[0059] 按实施例 2 制备好酸豆乳,切割成小凝乳块,阶段性加热,加热到 45-50℃促使其排出乳清,压力为 0.06 ~ 0.09kg/cm^2 之间压榨到水分含量为 40-43%,制成发酵豆干。

[0060] 实施例 6、大豆再制干酪制作

[0061] 按实施例 2、4 制备好发酵,接种毛霉 26℃培养 36h,8℃成熟 12 天制成大豆干酪。加入 14%胡萝卜汁、2.3%盐、1%糖、6.7%人造奶油、6.7%全脂奶粉、2%乳化稳定剂,85℃融化后进行包装。

[0062] 以上本发明提供的菌株发酵的酸豆乳、大豆豆干、再制豆干酪几种产品风味良好,

易为消费者接受。

Espacenet

Bibliographic data: CN101897418 (A) — 2010-12-01

Body taste improver comprising long-chain highly unsaturated fatty acid and/or ester thereof

Inventor(s): SUSUMU YAMAGUCHI; NARIHIDE MATSUZAKI; KEIKO BABA; IKUKAZU TASHIMA; OSAMU MORI ± (YAMAGUCHI SUSUMU, ; MATSUZAKI NARIHIDE, ; BABA KEIKO, ; TASHIMA IKUKAZU, ; MORI OSAMU)

Applicant(s): J OIL MILLS INC ± (J. OIL MILLS INC)

Classification: - **international:** ***A23D9/00; A23D9/013; A23D9/06; A23L1/221; A23L1/226; A23L1/30***
- **cooperative:** A23D9/00; A23D9/06; A23L27/202; A23L33/12; A23V2002/00 more

Application number: CN20101240821 20041109

Priority number (s): JP20030382729 20031112

Also published as: CN101897418 (B) AU2004288674 (A1) AU2004288674 (B2) AU2009202076 (A1) AU2009202076 (B2) more

Abstract of CN101897418 (A)

A body taste improver comprises a long-chain highly unsaturated fatty acid and/or ester thereof and is derived from a specific vegetable oil; a vegetable fat composition containing a long-chain highly unsaturated fatty acid and/or ester thereof, characterized by having an alpha-linolenic acid content of 5% or lower; various foods each containing any of the body taste improvers and vegetable fat composition; and a method of improving the body taste of a food, which comprises incorporating any of the body taste improvers and vegetable fat composition into the food; and a method of improving thebody taste of a food, which comprises respectively incorporating a long-chain highly unsaturated fatty acid and/or ester thereof and body taste reinforcement composition into the food.

(19)中华人民共和国国家知识产权局

(12)发明专利

(10)授权公告号 CN 101897418 B
(45)授权公告日 2013.08.14

(21)申请号 201010240821.4
(22)申请日 2004.11.09
(30)优先权数据
2003-382729 2003.11.12 JP
(62)分案原申请数据
200480033206.9 2004.11.09
(73)专利权人 J-制油株式会社
地址 日本东京都
(72)发明人 山口进 马场启子 森修
田岛郁一 松崎成秀
(74)专利代理机构 中国专利代理(香港)有限公司 72001
代理人 付磊 李炳爱
(51)Int.Cl.
A23L 1/221(2006.01)
(56)对比文件
CN 1090318 A,1994.08.03,全文.
CN 1145729 A,1997.03.26,全文.
CN 1389126 A,2003.01.08,说明书第1页所属技术领域和第6页实施例2.
审查员 张敏

权利要求书1页 说明书14页

(54)发明名称

含有长链高不饱和脂肪酸和/或其酯的醇香味改良剂

(57)摘要

本发明涉及醇香味改良剂,其含有来源于植物油的长链高不饱和脂肪酸和/或其酯;含有长链高不饱和脂肪酸和/或其酯的植物油脂组合物,其中α-亚麻酸含量是5%或更少;具有改善的醇香味的食品,所述食品含有所述植物的油脂组合物;改善食品醇香味的方法,包括向所述食品中添加植物油脂组合物;以及改善食品醇香味的方法,包括向所述食品分开添加长链高不饱和脂肪酸和/或其酯以及醇香味增强组分。

CN 101897418 B

1. 含有具有 18 个或更多碳原子和 3 个或更多双键的 n-6 长链高不饱和脂肪酸和 / 或其酯的植物油脂组合物作为醇香味改良剂的用途，其中 α - 亚麻酸的含量是植物油脂组合物的 5％或更少；所述长链高不饱和脂肪酸和 / 或其酯的含量是 10 ～ 100,000ppm，以所述长链高不饱和脂肪酸的含量表示。

2. 权利要求 1 所述的植物油脂组合物的用途，其中油酸的含量是植物油脂组合物的 20 ～ 86％，并且 / 或者亚油酸的含量是植物油脂组合物的 3 ～ 25％。

3. 权利要求 1 或 2 所述的植物油脂组合物的用途，其中所述长链高不饱和脂肪酸是花生四烯酸。

4. 权利要求 3 所述的植物油脂组合物的用途，其中花生四烯酸得自微生物。

5. 一种烹调食品的方法，包括向食品中添加权利要求 1-4 中任一项所述的植物油脂组合物并加热它们。

6. 一种改善食品醇香味的方法，包括向所述食品中添加权利要求 1-4 中任一项所述的植物油脂组合物。

含有长链高不饱和脂肪酸和／或其酯的醇香味改良剂

[0001] 本申请是以下申请的分案申请：申请日2004年11月9日，申请号200480033206.9(PCT/JP2004/016557)，标题“含有长链高不饱和脂肪酸和／或其酯的醇香味改良剂”。

技术领域

[0002] 本发明涉及一种含有作为主要成分的长链高不饱和脂肪酸和／或其酯和醇香味增强组分的醇香味（或“kokumi”味道）改良剂（或增香剂）；一种增强含有长链高不饱和脂肪酸和／或其酯的醇香味改良剂的效果的方法，包括向醇香味改良剂中添加醇香味增强组分；一种植物油脂组合物，其含有具有低含量α－亚麻酸的植物油脂和一种含有长链高不饱和脂肪酸和／或其酯的醇香味改良剂；一种含有上述成份并且具有改善的醇香味的食品；和一种改善食品醇香味的方法，包括向所述食品中添加醇香味改良剂或所述植物油脂组合物。

[0003] 发明技术

[0004] 花生四烯酸（顺式-5,8,11,14-二十碳四烯酸）属于长链高不饱和（多不饱和）脂肪酸，并且存在于获自动物器官或组织的磷脂中。该脂肪酸是必需的，并且作为合成前列腺素、促血栓素、白细胞三烯等的前体非常重要。

[0005] 已经试图添加例如花生四烯酸及其酯的长链高不饱和脂肪酸用于营养富集，并且由于花生四烯酸的上述显著功能而提供各种生理功能。

[0006] 已公开的日本专利申请Hei 10(1998)-99048描述的富集成分包括：以重量计0.1～10％的花生四烯酸，其作为一种添加组分以获得类似于母乳的组合物。

[0007] 作为上述酯的例子，已公开日本专利申请Hei 4(1992)-197134公开了用于油炸的油脂组合物，其防止蒸发潜热导致的原料内部温度下降。上述组合物包括以重量计20～60％的组成脂肪酸不饱和脂肪酸，例如花生四烯酸。

[0008] 已公开的日本专利申请Hei 9(1997)-13075公开了由包含长链高不饱和脂肪酸例如花生四烯酸的甘油酯组成的油脂，并且其具有降低血液中油脂浓度的功能。通过转酯作用获得上述甘油酯。其具有与天然甘油酯不同的结构，其中小于40mol％的总长链高不饱和脂肪酸连接于甘油酯的2位。

[0009] 已公开的日本专利申请Hei 9(1997)-13076公开了与上述具有相同组成的油脂，其具有抑制血小板聚集的功能。

[0010] 已公开的日本专利申请Hei 11(1999)-89513公开了一种类似于人乳油脂的合成油脂组合物，其中n-6长链高不饱和脂肪酸例如花生四烯酸被用作一种甘油三酯的组成脂肪酸。

[0011] 此外，已公开的日本专利申请Hei 10(1998)-70992和已公开的日本专利申请Hei 10(1998)-191886公开了来源于微生物的食用油，其具有大量甘油三酯形式的花生四烯酸。其优选的应用包括用于早产婴儿或婴儿的改变成分的牛乳、婴儿食品和孕妇食品。

[0012] 然而，没有披露利用长链高不饱和脂肪酸以便改善口味，例如食品和植物油脂的

醇香味的技术，或没有记载上述可能性的建议。

[0013] 存在一个问题，向食品中添加长链高不饱和脂肪酸可能恶化其味道，这是由于来源于脂肪酸氧化分解产生的臭味回复味。已经试图使用多种手段解决上述问题。

[0014] 已公开的日本专利申请 Sho 63(1988)-44843 公开了其中一种方法，其中高不饱和脂肪酸被包含于油包水包油型乳剂组合物的内部油相中。已公开的日本专利申请 Hei 6(1994)-172782 公开了粉碎包含高不饱和脂肪酸的油脂的技术。已公开的日本专利申请 Hei9(1997)-176679 公开了将抗氧化剂粉末和粉碎的不饱和脂肪酸混合的技术。已公开的日本专利申请 Hei 9(1997)-263784 公开了将 δ- 生育酚和包含多不饱和脂肪酸的油脂混合的技术。已公开的日本专利申请 Hei 11(1999)-12592 公开了将大豆源添加至包含高不饱和脂肪酸的鱼油中的技术。

[0015] 已公开的日本专利申请 2001-78702 公开了一种通过将油脂与提取物混合成水包油型乳剂而制备的具有增强的清淡味道、味道和回味的调味品，其作为在食品领域中应用高不饱和脂肪酸的例子。作为上述油脂的例子公开了鱼油或含有鱼油的油脂，包括以重量计 10％或更多所述鱼油是由 n-3(ω-3) 高不饱和脂肪酸组成的。

[0016] 优选使用聚甘油的脂肪酸酯作为乳化剂，并且使用含有抗氧化剂例如肌肽和鹅肌肽的提取物以防止油脂的氧化。在制备所述调味品的方法中不进行氧化处理例如不进行热处理。所述调味品对其具有显著效果的食品的例子包括切碎的产品、鱼类和加工鱼类产品。

[0017] 日本专利 No.3220155 公开了一种调味品组合物，其是通过氧化除乳脂之外的脂肪酸而制备的，并且其特征在于含有至少一种以重量计大于 0.01％的具有 n-3 非共轭双键的多不饱和脂肪酸。该调味品组合物含有在黄油样香味中显著分辨的甜的奶油味的特征。为了获得上述特征，所述油脂需要进行氧化处理，其应该在可以轻微延迟氧化的抗氧化剂存在的过程中在可控的条件下进行。由于氧化处理过程中产生的香味含有挥发性组分，优选在封闭系统中进行氧化处理。实际上，在一个实施例中通过使用回流冷凝器进行氧化处理。据描述，所述调味品组合物特别适用于向希望具有黄油香味的食品中添加香味。

[0018] 美国专利 US 3,689,289 公开了一种通过在特定条件下热处理还原糖、氨基酸和花生四烯酸或其甲酯来生产人造鸡肉香味的方法。进一步，国际公开的 WO 03/051139 小册子公开了一种通过在特定条件下热处理还原糖、氨基酸和花生四烯酸来生产人造鸡肉香味的方法，其中通过使用甘油酯形式的花生四烯酸来获得所述人造鸡肉香味的耐热性和持久性。

[0019] 虽然在上述方法中通过加热三种化合物糖、氨基酸和花生四烯酸而获得的产品可以产生人造鸡肉香味，没有关于通过利用长链高不饱和脂肪酸例如单独使用花生四烯酸，或与氨基酸或糖联合使用以增加食品“umami”味道的描述。

[0020] 已公开的日本专利申请 2002-95439 公开了含有长链高不饱和脂肪酸甘油酯的调味品，允许人们在食用各种食品的同时摄入长链高不饱和脂肪酸。本发明的目的是增加长链高不饱和脂肪酸对氧化所致恶化敏感的氧化稳定性。因此，其特征在于向通过发酵大豆或鱼类和贝壳类而制备的加工食品或向主要由番茄成份组成的调味品中添加长链高不饱和脂肪酸甘油酯。因此，没有披露或教导氧化处理长链高不饱和脂肪酸，或通过相同的酸本身增加或提供食品的醇香味。

[0021] [专利文献 1] 日本专利 3220155

[0022] [专利文献 2] 美国专利 US 3,689,289

[0023] [专利文献 3] 国际公开 WO 03/051139 小册子

[0024] [专利文献 4] 已公开的日本专利申请 2002-95439

发明内容

[0025] 在食品领域，存在某些种类的需要“醇香味”和“浓厚的或浓重的味道”的食品，例如油炸食品，包括炸猪排，含有油脂的食品，包括咖喱和“饺子”（中国式猪肉饺子）。通常，加入香料，或者单独使用动物油脂或与植物油脂联合使用来为食品提供上述味道。

[0026] 然而，存在一个问题，所添加的香料在热处理期间挥发以致无法维持所产生的醇香味。还有一些担心，动物油脂所含的胆固醇或饱和脂肪酸可能对健康不利。另一方面，存在一个问题，由于植物油脂含有少量胆固醇或饱和脂肪酸，使用植物油脂烹调的食品的味道单一或平淡，致使需要醇香味的食品不能令人满意。

[0027] 因此希望提供不含胆固醇并具有低含量的饱和脂肪酸然而具有醇香味的油脂。

[0028] 长期以来，认为长链高不饱和脂肪酸例如花生四烯酸和／或其酯是肉类腐败气味和类似异味的原因。然而，据发现当单独将食品与长链高不饱和脂肪酸和／或其酯混合，或进行氧化处理例如与含有预先确定量的长链高不饱和脂肪酸和／或其酯的植物油脂一同加热时，食品的醇香味增强并且食品的最初味道增加 (PCT/JP03/00182)。

[0029] 本发明人进行了研究以力图攻克上述问题，并且最终发现可以通过向含有长链高不饱和脂肪酸和／或其酯的醇香味改良剂中添加醇香味增强组分例如 α－生育酚和／或含铁组分，以进一步增强醇香味改善效果。本发明人同时发现，通过向具有低 α－亚麻酸和／或亚油酸含量的植物油脂组合物中添加长链高不饱和脂肪酸和／或其酯，可以大大改善所述植物油脂组合物的醇香味。基于上述发现完成了本发明。

[0030] 因此，本发明涉及一种含有作为主要成分的长链高不饱和脂肪酸和／或其酯和醇香味增强组分的醇香味改良剂；一种含有长链高不饱和脂肪酸和／或其酯的醇香味改良剂，所述长链高不饱和脂肪酸和／或其酯来源于具有大量 γ－亚麻酸的特定植物油；一种增强含有长链高不饱和脂肪酸和／或其酯的醇香味改良剂的效果的方法，包括向醇香味改良剂中添加醇香味增强组分；一种含有长链高不饱和脂肪酸和／或其酯的具有 5％或更少 α－亚麻酸含量的植物油脂组合物；一种具有改善的醇香味的的食品，所述食品含有醇香味改良剂或所述植物油脂组合物；一种改善食品醇香味的方法，包括向所述食品中添加醇香味改良剂或植物油脂组合物；以及一种改善食品醇香味的方法，包括向所述食品中分开添加长链高不饱和脂肪酸和／或其酯以及醇香味增强组分。

[0031] 本说明书中的“醇香味改良剂”意指一种实现本发明优越性的试剂，即一种添加于食品中，为食品重新提供显著的“醇香味”或“浓厚的或浓重的味道”或使其改善的试剂。本说明书的实施例中描述了通过感官测试对“醇香味”进行评价。

[0032] 本说明书中的“醇香味增强组分”意指一种可以通过长链高不饱和脂肪酸和／或其酯额外地或协同地增强上述优越性的成分。

[0033] 可以通过向含有长链高不饱和脂肪酸和／或其酯的醇香味改良剂中添加醇香味增强组份例如 α－生育酚和／或铁组份，使醇香味改善效果得到进一步增强。通过向具有低 α－亚麻酸和／或亚油酸含量的植物油脂组合物中添加长链高不饱和脂肪酸和／或其酯，可

以大大改善所述植物油脂组合物的醇香味。

[0034] 对醇香味增强成分的种类或结构没有限制，包括作为典型例子的 α－生育酚以及铁组份。虽然不应该视为以任何方式限制本发明，但是已知 α－生育酚和铁组份促进油脂的氧化。

[0035] 可以从本领域技术人员已知的任何市场上可买到的含铁原料提供所述铁组份，包括离子盐例如硫酸亚铁、柠檬酸亚铁、柠檬酸铁、葡萄糖酸亚铁、氯化铁和乳酸亚铁；以及血红素铁；血浆粉末；和血细胞粉末。存在 3 种形式的铁，即铁原子、亚铁盐以及铁盐，优选亚铁盐。可以通过任何已知的方法例如溶解、分散和乳化，以使所述铁组份与长链高不饱和脂肪酸和／或其酯混合。

[0036] 也可以从任何本领域技术人员已知的商品原料提供 α－生育酚。一种市场上可买到的含有 α－生育酚作为最主要的生育酚成分，更具体地说，α－生育酚占总生育酚的 50％或更多的生育酚配制品，可以用于提供本发明的 α－生育酚。还可以使用含有高含量 α－生育酚的植物油脂来提供本发明的 α－生育酚。另外，可以从任何市场上可买到的生育酚配制品中去除 β－，γ－，δ－生育酚，以得到用于本发明的具有富集的 α－生育酚的生育酚配制品。

[0037] 对醇香味改良剂中的醇香味增强组分的含量没有限制，考虑优势和成本，对于 α－生育酚，优选 50 ～ 15,000ppm，更优选 50 ～ 5,000ppm，更优选 100 ～ 2,000ppm，以及对于铁组份，以 Fe 表示的含量为 0.1 ～ 200ppm，优选 0.5 ～ 100ppm。

[0038] 在本说明书中的“长链高不饱和脂肪酸”在 n-3 长链高不饱和脂肪酸的情况下，意指一种具有 20 或更多碳原子和 3 个或更多双键的脂肪酸，和在 n-6 长链高不饱和脂肪酸的情况下，意指具有 18 个或更多碳原子和 3 个或更多双键的脂肪酸。在两种情况中优选具有 20-24 个碳原子和 4-6 个双键的长链高不饱和脂肪酸。n-6 长链高不饱和脂肪酸的例子包括 γ－亚麻酸、花生四烯酸 (AA) 和二十二碳四烯酸 (DTA)，优选花生四烯酸。n-3 长链高不饱和脂肪酸的例子包括二十二碳六烯酸 (DHA) 和二十碳五烯酸 (EPA)。

[0039] 对用于本发明的长链高不饱和脂肪酸，例如花生四烯酸和其酯的来源没有限制。本领域技术人员可以选择性地使用市场上可买到的来源于各种动物和蔬菜、微生物和藻类的长链不饱和脂肪酸。

[0040] 例如，已公开的日本专利申请 Hei 10(1998)-70992 和 Hei10(1998)-191886 公开了来源于细菌的含有大量甘油三酯形式的花生四烯酸的食用油脂。因此可以从所述食用油脂得到花生四烯酸。

[0041] 还可以混合和使用两种或更多种长链高不饱和脂肪酸或具有不同来源但属于相同种类的长链高不饱和脂肪酸。

[0042] 对于所述长链高不饱和脂肪酸酯的结构和制备没有限制，并且一元醇和多元醇可以用作构成上述酯的醇。考虑到安全和成本，甘油是一种优选的多元醇。所述甘油可以构成甘油三酯、甘油二酯或甘油一酯。除了所述长链高不饱和脂肪酸之外还可以含有其它脂肪酸，作为构成本发明所述酯的脂肪酸。

[0043] 植物油例如豆油、玉米油、橄榄油、HOS 和芸苔油不含 γ－亚麻酸。另一方面，琉璃苣籽油、月见草油、蔷薇果油和黑色穗醋栗油含有约 3 ～ 22％的 γ－亚麻酸。特别是，由于琉璃苣籽油含有约 22％的 γ－亚麻酸，可以优选用作本发明长链高不饱和脂肪酸的原料。

[0044] 因此，本发明涉及一种醇香味改良剂，其含有来源于植物油的长链高不饱和脂肪酸和／或其酯，所述植物油选自琉璃苣籽油、月见草油、蔷薇果油和黑色穗醋栗油，特别是来源于琉璃苣籽油。

[0045] 对本发明醇香味改良剂中含有的长链高不饱和脂肪酸和其酯的含量没有限制。然而，如果含量过低，需要更多量的醇香味改良剂，由此可能由于其含有的其它组分而导致不利的影响。本发明的醇香味改良剂含有长链高不饱和脂肪酸和其酯的量优选为以重量计10％或更多，更优选以重量计30％或更多。

[0046] 本发明的醇香味改良剂可以额外含有本领域技术人员已知的其它任选组分，例如乳化剂；生育酚；甾醇；磷脂及其他脂肪酸；含有其它脂肪酸的甘油三酯、甘油二酯和甘油一酯。

[0047] 优选将n-3长链高不饱和脂肪酸和／或其酯进行氧化处理，以充分实现本发明的优越性。对所述氧化处理的方法没有限制，例如包括热处理。对热处理的方法也没有限制。存在抗氧化剂或在封闭系统中时不必进行氧化处理。因此所述加热通常在40℃～200℃进行0.1～240小时，优选在80℃～180℃进行0.5～72小时。虽然不必对n-6长链高不饱和脂肪酸和／或其酯进行氧化处理以实现其作为醇香味改良剂的优越性，应该进一步通过氧化处理使其优越性得到增强。

[0048] 例如，可以通过加热含有长链高不饱和脂肪酸和／或其酯的醇香味改良剂，或对含有醇香味改良剂的食品进行氧化处理。

[0049] 长链高不饱和脂肪酸比其酯更具挥发性，特别是甘油酯，甚至较少量的所述酸就可以实现本发明的优点。另一方面，酯相对较少挥发性但是持续有效，其以相对较大的量包含于组合物中。

[0050] 本发明进一步涉及含有醇香味改良剂的植物油脂组合物。可以将任何本领域技术人员已知的植物油脂用于本发明的基础油脂，包括大豆油、菜子油、玉米油、向日葵油、HOS、米糠油、芝麻油、橄榄油和棕榈油。其中，可以通过向主要用于加热烹调例如油炸和炒制的豆油、菜子油、玉米油和棕榈油中添加醇香味改良剂以有效地实现本发明的优点。可以任选地混合并使用任何两种或多种所述植物油脂。

[0051] 取决于长链高不饱和脂肪酸的种类和应用，本领域技术人员可以选择性地确定所述植物油脂组合物中的长链高不饱和脂肪酸和／或其酯含量，通常是10～100,000ppm，优选10～20,000ppm，更优选10～5,000ppm，更优选20～1,000ppm，以长链高不饱和脂肪酸的含量表示。特别是，当含有来源于植物油的长链高不饱和脂肪酸例如γ－亚麻酸的植物油脂组合物被用作油类烹调例如油炸所用油脂的基础油脂，或用作供给香气或香味的油类的基础油脂时，植物油脂组合物中的长链高不饱和脂肪酸例如γ－亚麻酸的含量通常是0.05～10％，优选0.1～5％。

[0052] 本说明书已经提及，琉璃苣籽油、月见草油、蔷薇果油和黑色穗醋果油含有的γ－亚麻酸的含量为约3～22％。因此，来源于蔬菜的油可以有益地用作本发明的植物油脂，不用更进一步添加长链高不饱和脂肪酸和／或其酯。

[0053] 此外，本发明人发现，如果根据本发明特定条件混合所述植物油脂的脂肪酸和长链高不饱和脂肪酸和／或其酯，可以更加有效地增加醇香味。

[0054] 由此，优选的植物油脂组合物的α－亚麻酸含量为5％或更少，例如0.01～5％，

优选 0.05 ～ 3%。进一步，更优选地，植物油脂组合物的油酸含量为 20 ～ 86%并且／或亚油酸的含量为 3 ～ 25%。

[0055] 如上所述，所述植物油脂组合物含有的长链高不饱和脂肪酸和／或其酯的量通常为 10 ～ 100,000ppm，优选 10 ～ 20,000ppm，更优选 10 ～ 5,000ppm，更优选 20 ～ 1,000ppm。所述植物油脂组合物不必含有醇香味增强组分。

[0056] 由于琉璃苣籽油和黑色穗醋栗油基本上不含 α－亚麻酸，但是含有上述含量的油酸，由此观点，它们优选作为植物油脂组合物。

[0057] 根据本发明得到的植物油脂组合物可以用于各种烹饪方法，例如加热烹饪方法，优选在 80℃～ 300℃，更优选在 110℃～ 300℃下的加热烹饪方法。在上述温度范围的热处理可以增加用植物油脂组合物烹调过的食物的醇香味并增强其最初的味道。

[0058] 最后，本发明涉及一种具有增加的醇香味的食物，其含有醇香味改良剂或本发明所述植物油脂组合物。对食物的种类没有限制，包括用油烹调过的食物例如各种油炸和炒制的食物；以及含有脂肪的食物例如咖喱、中国式猪肉饺子和中国式猪肉蒸饺。本发明所述食物通过其中含有的醇香味改良剂或植物油脂组合物而具有显著的醇香味以及浓厚的或醇厚的味道。可以使用热处理进一步增加上述食物的醇香味。

[0059] 因此，本发明涉及一种增加食物醇香味的方法，包括添加醇香味改良剂或所述植物油脂组合物。可以向食物中分开添加醇香味改良剂中含有的长链高不饱和脂肪酸和／或其酯以及醇香味增强组分，以便得到相同的优越性。因此，本发明还涉及一种增加食物醇香味的方法，包括分开添加长链高不饱和脂肪酸和／或其酯和醇香味增强组分至所述食物中。在分开添加上述组分情况下，优选获得最终含有长链高不饱和脂肪酸和／或其酯和醇香味增强组分的食品，其用量与已经添加有醇香味改良剂的食物中的用量相同。本领域技术人员可以任选地选择添加上述组分的时机和顺序。

[0060] 对食品中醇香味改良剂或植物油脂组合物的量没有限制。通常，可以在食用时以 0.1 ～ 100,000ppm，优选 0.1 ～ 0,000ppm 的量使用长链高不饱和脂肪酸和／或其酯来获得醇香味增强效果。例如，对于液态食品例如大豆源和汤，可以在食用时以 1 ～ 1,200ppm，优选 1 ～ 500ppm 的量使用长链高不饱和脂肪酸和／或其酯来获得醇香味增强效果。对于干燥的食品例如汉堡，可以以优选 20 ～ 2,500ppm，优选 20 ～ 1,000ppm 的量使用长链高不饱和脂肪酸和／或其酯来获得醇香味增强效果。

具体实施方式

[0061] 下面将参照实施例更详细地描述本发明，其不应该理解为对本发明技术范围的限制。除非另有说明，下文实施例中的术语″％″意指″以重量计的％″。

[0062] 通过用于分析脂肪、油类和相关原料的标准方法 2.4.10-1996(Japan Oil Chemistry Association) 来确定生育酚含量。通过用于分析脂肪、油类和相关原料的标准方法 2.4.2.2-1996(Japan Oil ChemistryAssociation) 来确定脂肪酸的含量。

[0063] 感官测试：

[0064] 在感官测试中，所述改善醇香味是指增加“香气强度”、“香味强度”、“味道强度”和“回味强度”，而没有使相应的“香气令人满意的程度”、“香味令人满意的程度”、“味道令人满意的程度”和“回味令人满意的程度”恶化。

[0065] 评味小组：n ＝ 7

[0066] 下表所用表示评价结果的符号的含义如下：

[0067] “×”：弱于或劣于对照；

[0068] “△”：与对照相同的程度；

[0069] “○”：强于或优于对照；

[0070] “◎”：大大强于或优于对照。

[0071] 实施例

[0072] 实施例中所用的长链高不饱和脂肪酸：

[0073] 含有 AA 的甘油三酯 (AATG)：AA 含量 40-45％，由 Nakarai Tesk Ltd. 经销，由 Suntory Ltd

[0074] 生产；

[0075] 琉璃苣籽油：γ－亚麻酸含量 20％，由 Statfold Co. 生产；

[0076] 低亚麻酸芸苔油：Ajinomoto Oil Mills Co.lnc. 生产的″ LLC″

[0077] 菜籽油：Ajinomoto Oil Mills Co.Inc. 生产的″ CO″

[0078] 高油红花油：Ajinomoto Oil Mills Go.Inc 生产的″ HOS″

[0079] [表 1]

[0080] 脂肪酸组成（％）

[0081]

	C16	C18:0	C18:1	C18:2	C18:3(n-3)
CO	3.9	1.9	62.5	19.5	8.8
HOS	4.6	1.9	76.3	14.2	0.2
LLC	3.3	1.7	73.5	15.4	2.4

[0082] [表 2]

[0083] 生育酚制备及其组成

[0084] 由 ADM Co. 生产的“维生素 E5-67”

[0085]

	α	β	γ	δ
含量 (mg/g)	707	16	4	3

[0086] <α－生育酚作为醇香味增强组分的效果>

[0087] 将下列长链高不饱和脂肪酸和／或其酯和 α－生育酚制品与所述植物油脂组合物混合以得到下列配制油。

[0088] (1)LLC

[0089] (2)1％ AAATG/LLC(AA 含量 0.4％)

[0090] (3)0.5％ AATG/LLC(AA 含量 0.2％)

[0091] (4)1％ AATG+0.002％ α－生育酚制品 /LLC(AA 含量 0.4％，α－生育酚含量

14.1ppm)

[0092] (5)1％AATG+0.01％α－生育酚制品/LLC(AA含量0.4％，α－生育酚含量70.7ppm)

[0093] (6)1％AATG+0.02％α－生育酚制品/LLC(AA含量0.4％，α－生育酚含量141ppm)

[0094] (7)1％AATG+0.2％α－生育酚制品/LLC(AA含量0.4％，α－生育酚含量1,410ppm)

[0095] (8)1％AATG+2％α－生育酚制品/LLC(AA含量0.4％，α－生育酚含量14,100ppm)

[0096] (9)0.5％AATG+0.02％α－生育酚制品/LLC(AA含量0.2％，α－生育酚含量141ppm)

[0097] 将每种配制油(15g)与面筋含量低的面粉(15g)混合，在120℃加热30分钟，然后与3g咖喱粉(S&B Food Inc.生产的“Tokusei SB Curry”)混合，并在120℃再一次加热10分钟以制备咖喱酱。添加500ml清炖肉汤(Ajinomoto Co.Inc.生产的Consomme，1.7％溶液)并加热。用清炖肉汤稀释咖喱酱以制备咖喱汤。

[0098] [表3]

[0099]

配制油(醇香味改良剂)	(1)	(2)
食用时的AA浓度(ppm)	0	112.5
香气强度	－	◎
香气令人满意的程度	－	◎
香味强度	－	◎
香味令人满意的程度	－	◎
味道强度	－	◎
味道令人满意的程度	－	◎
回味强度	－	◎
回味令人满意的程度	－	◎

[0100] [表4]

[0101] (2)对照和(3)-(9)之间的比较

[0102]

配制油(醇香味改良剂)	(2)	(3)	(4)	(5)	(6)	(7)	(8)	(9)
油中的α-生育酚浓度(ppm)	0	0	14	71	141	1410	14100	141
食用时 AA 的浓度(ppm)	112.5	56.3	112.5	112.5	112.5	112.5	112.5	56.3
香气强度	-	×	△	○	○	◎	◎	◎
香气令人满意的程度	-	×	△	◎	◎	◎	◎	◎
香味强度	-	×	△	○	○	◎	◎	◎
香味令人满意的程度	-	×	△	○	◎	◎	◎	◎
味道强度	-	×	△	◎	◎	◎	◎	◎
味道令人满意的程度	-	×	△	◎	◎	◎	○	◎
回味强度	-	×	△	◎	◎	◎	◎	◎
回味令人满意的程度	-	×	△	○	○	○	○	◎

[0103] 表 4 中的结果显示,与配制油 (2)(对照:不添加 α-生育酚)相比,每一数量的配制油 (5)-(8) 中存在的 α-生育酚增强了醇香味改善效果,即使他们具有相同的 AATG 浓度。进一步,观察到,虽然含有比配制油 (2) 较低 AATG 浓度的配制油 (3) 在醇香味改善效果方面次于配制油 (2),但是与 α-生育酚制品混合的配制油 (9) 显示比配制油 (2) 更强的醇香味改善效果,尽管其具有与配制油 (3) 相同的 AATG 浓度。

[0104] <铁组分作为醇香味增强组分的效果>

[0105] 将 $FeSO_4.7H_2O$ 以 0.00005 ~ 0.1% (铁:0.1 ~ 200ppm) 的浓度添加至 2.5% 的 AATG/LLC 中,并均匀分散。将得到的配制油添加至 0.8%盐水中至最终浓度为 0.1%。

[0106] (1)2.5% AATG/LC

[0107] (2)$FeSO_4.7H_2O$ 0.00005% (铁:0.1ppm)/2.5% AATG/LLC

[0108] (3)$FeSO_4.7H_2O$ 0.00025% (铁:0.5ppm)/2.5% AATG/LLC

[0109] (4)$FeSO_4.7H_2O$ 0.005% (铁:10ppm)/2.5% AATG/LLC

[0110] (5)$FeSO_4.7H_2O$ 0.05% (铁:100ppm)/2.5% AATG/LLC

[0111] (6)$FeSO_4.7H_2O$ 0.1% (铁:200ppm)/2.5% AATG/LLC

[0112] [表 5]

[0113]

配制油（醇香味改良剂）	(1)	(2)	(3)	(4)	(5)	(6)
食用时 AA 的浓度 (ppm)	10	10	10	10	10	10
油中铁的浓度 (ppm)	0	0.1	0.5	10	100	200
香气强度	–	△	○	◎	◎	◎
香气令人满意的程度	–	○	○	◎	○	△
香味强度	–	△	○	◎	◎	◎
香味令人满意的程度	–	○	○	○	○	△
味道强度	–	△	○	◎	◎	◎
味道令人满意的程度	–	○	○	◎	○	△

[0114] 表 5 中的结果显示，与配制油 (1) 对照相比，配制油 (2)-(6) 的香气、香味和味道强度均由于其中存在含铁组分而得到增强，即使两者盐水中 AATG 的浓度相同。结果还显示，与配制油 (1) 对照相比，更优选配制油 (2)-(5) 的香气、香味和味道，但是与配制油 (3)、(4) 和 (5) 相比，大概由于其来源于铁，较少地偏爱配制油 (6) 的香气、香味和味道。

[0115] 以下列浓度向方便面汤中添加 $FeSO_4.7H_2O$ 和 5% AATG/LLC（用 FAITAN Tonkostu 酱油进行 9 倍稀释，Ajinomoto Go. Inc 生产），并评价香气、香味和味道。

[0116] (1) 5% AATG/LLC，1g/1,000g 面汤

[0117] (2) (1)+$FeSO_4.7H_2O$ 0.001mM/1,000g 面汤（铁：0.06ppm）

[0118] (3) (1)+$FeSO_4.7H_2O$ 0.01mM/1,000g 面汤（铁：0.56ppm）

[0119] (4) (1)+$FeSO_4.7H_2O$ 0.1mM/1,000g 面汤（铁：5.6ppm）

[0120] (5) (1)+$FeSO_4.7H_2O$ 1.0mM/1,000g 面汤（铁：56ppm）

[0121] (6) (1)+$FeSO_4.7H_2O$ 5.0mM/1,000g 面汤（铁：280ppm）

[0122] [表 6]

[0123]

Case No.: IPR2023-00208
U.S. Patent No. 10,039,306

配制油（醇香味改良剂）	（1）	（2）	（3）	（4）	（5）	（6）
食用时 AA 的浓度（ppm）	20	20	20	20	20	20
铁的浓度（ppm）	0	0.06	0.56	5.6	56	280
香气强度	-	△	○	◎	◎	◎
香气令人满意的程度	-	○	○	◎	○	△
香味强度	-	△	○	◎	◎	◎
香味令人满意的程度	-	○	○	○	○	△
味道强度	-	△	○	◎	◎	◎
味道令人满意的程度	-	○	◎	○	○	△

[0124] 表 6 中的结果显示，与配制油 (1) 对照相比，配制油 (2)-(6) 的香气、香味和味道强度均由于其中存在铁组分而得到增强，即使两者方便面汤中 AATG 浓度相同。结果还显示，与配制油 (1) 对照相比，更优选配制油 (2)-(5) 的香气、香味和味道，但是与配制油 (3)、(4) 和 (5) 相比，大概由于其来源于铁，较少地偏爱配制油 (6) 的香气、香味和味道。

[0125] ＜琉璃苣籽油作为醇香味改良剂的效果＞

[0126] 在 3kg 每种上述植物油脂组合物中油炸 150g 马铃薯圈 (Potato shoe strings) (Ajinomoto Frozen Foods Co.，Inc. 生产的“马铃薯圈”)，在 180℃下油炸 3 分钟。

[0127] [表 7]

[0128]

Motif Exhibit 1148, Page 2253 of 3341

琉璃苣籽油含量（%）	0	0.1	0.5	1	5	10	20	30	50	100
γ-亚麻酸含量（%）	0	0.02	0.1	0.2	1	2	4	6	10	20
香气强度	-	△	○	◎	◎	◎	◎	◎	◎	◎
香气令人满意的程度	-	△	○	◎	◎	◎	○	○	○	×
香味强度	-	△	○	○	◎	◎	◎	◎	◎	○
香味令人满意的程度	-	△	○	○	◎	◎	◎	○	○	×
味道强度	-	△	○	○	◎	◎	◎	◎	◎	◎
味道令人满意的程度	-	△	○	○	◎	◎	◎	○	○	×
回味强度	-	△	○	○	◎	◎	◎	◎	◎	◎
回味令人满意的程度	-	△	○	○	◎	◎	◎	○	○	×

[0129] 在含有 γ-亚麻酸作为长链高不饱和脂肪酸的琉璃苣籽油中油炸所述马铃薯圈来为其提供醇香味。另一方面，油中过量的 γ-亚麻酸将会恶化香气、香味和味道。

[0130] 通过使用下列配制油来烹调调味的蒸肉饭。

[0131] (1)LLC

[0132] (2)3%琉璃苣籽油 /LLC（γ-亚麻酸含量 0.6%）

[0133] (3)30%琉璃苣籽油 /LLC（γ-亚麻酸含量 6%）

[0134] (4) 琉璃苣籽油（γ-亚麻酸含量 20%）

[0135] 通过向未洗的大米 (200g) 中加水 (300g)、Ajinomoto Co. Inc. 生产的“炒米饭用烹调米”(10g) 和每种配制油，然后在电饭锅中煮沸以烹调肉饭。表 8 的结果显示，与含有适当量的 γ-亚麻酸的琉璃苣籽油一同烹调可以为肉饭提供醇香味。

[0136] [表 8]

[0137]

配制油（醇香味改良剂）	（1）	（2）	（3）	（4）
添加量（g）	5	5	5	5
添加的γ-亚麻酸的浓度（ppm）	0	58	580	1,942
香气强度	-	○	◎	◎
香气令人满意的程度	-	○	◎	◎
香味强度	-	○	◎	◎
香味令人满意的程度	-	○	◎	○
味道强度	-	○	◎	◎
味道令人满意的程度	-	○	◎	○
回味强度	-	○	◎	◎
回味令人满意的程度	-	○	◎	○

[0138] <脂肪酸组合物的效果>

[0139] 制备了以下油脂组合物。

[0140] (1)0.0625% AATG/CO(AA 含量 250ppm)

[0141] (2)0.125% AATG/CO(AA 含量 500ppm)

[0142] (3)0.0625% AATG/LLC(AA 含量 250ppm)

[0143] (4)0.0625% AATG/HOS(AA 含量 250ppm)

[0144] 如下制备炸猪排：用盐（0.6g）和少量胡椒腌制猪腰肉（75g），用小麦粉、20%蛋液和面包屑涂敷，然后于 180℃在上述油脂制品中油炸 30 分钟。表 9 中的结果显示，即使 AA 含量相同，醇香味改善效果仍取决于所用油脂制品中的脂肪酸组成。更具体地说，其显示优选含有 5%或更少 α－亚麻酸（C18:3(n-3)）的油，例如 HOS 和 LLC。

[0145] [表 9]

[0146]

配制油	(1)	(2)	(3)	(4)
	CO	CO	LLC	HOS
AAG 含量（%）	250	500	250	250
香气强度	△	◎	◎	◎
香气令人满意的程度	△	○	○	○
香味强度	△	◎	◎	◎

Case No.: IPR2023-00208
U.S. Patent No. 10,039,306

香味令人满意的程度	△	○	○	○
味道强度	△	◎	◎	◎
味道令人满意的程度	△	◎	◎	◎
回味强度	△	◎	◎	◎
回味令人满意的程度	△	○	○	◎

[0147] 发明优点

[0148] 可以通过将食品与醇香味改良剂或含有醇香味改良剂的植物油脂组合物一同烹调，而为食品提供醇香味。

Motif Exhibit 1148, Page 2256 of 3341

Espacenet

Bibliographic data: CN102440302 (A) — 2012-05-09

Coated soybean cheese and making method thereof

Inventor(s):	JINGLI XIE; QINGHUI LI; DONGZHI WEI ± (XIE JINGLI, ; LI QINGHUI, ; WEI DONGZHI)	
Applicant(s):	UNIV EAST CHINA SCIENCE & TECH ± (EAST CHINA UNIVERSITY OF SCIENCE AND TECHNOLOGY)	
Classification:	**- international:**	***A23C20/02***
	- cooperative:	
Application number:	CN20111358380 20111111	Global Dossier
Priority number (s):	CN20111358380 20111111	
Also published as:	CN102440302 (B)	

Abstract of CN102440302 (A)

The invention discloses a technology for making coated soybean cheese. The technology for making the coated soybean cheese comprises the following three steps of: A) preparing soybean milk; B) making soybean cheese by mixed fermentation; and C) preparing the coated soybean cheese. The soybean milk is obtained by ultrasonic treatment after soybean is thermally pulped. The soybean cheese is obtained by squeezing soybean curd formed under the co-action of inoculated lactic acid bacteria leaven for fermenting and added D-gluconic acid-delta-lactone (GDL). The coated soybean cheese is prepared by using the soybean cheese subjected to limited enzymolysis as a raw material. The coated soybean cheese which is not added with any milk product components has good flavor property, coated property anddeliquescence in mouth.

(19)中华人民共和国国家知识产权局

(12)发明专利申请

(10)申请公布号 CN 102440302 A
(43)申请公布日 2012.05.09

(21)申请号 201110358380.2

(22)申请日 2011.11.11

(71)申请人 华东理工大学
地址 200237 上海市徐汇区梅陇路 130 号

(72)发明人 谢静莉 李晴辉 魏东芝

(74)专利代理机构 上海智信专利代理有限公司 31002
代理人 薛琦

(51)Int.Cl.
A23C 20/02(2006.01)

权利要求书 1 页 说明书 8 页 附图 2 页

(54)发明名称

一种涂抹型大豆干酪及其制作方法

(57)摘要

本发明公开了一种涂抹型大豆干酪的制作工艺。本发明的涂抹型大豆干酪的制作过程分为三个工艺步骤:A)豆乳的制备;B)混合发酵制作大豆干酪;C)再制涂抹型大豆干酪。所述豆乳是通过将大豆热磨浆后超声处理而获得。所述大豆干酪是由接种乳酸菌发酵剂发酵和加 D-葡萄糖酸-δ-内酯(GDL)共同作用使豆乳形成凝乳压榨而获得。所述涂抹型大豆干酪是采用经限制性酶解的大豆干酪为原料而制成。本发明的不添加任何牛乳制品成分的涂抹型大豆干酪具备理想的风味特性、涂抹性及口中融化性。

CN 102440302 A

1. 一种涂抹型大豆干酪的制作方法，其特征在于包括步骤：

A) 豆乳的制备；

B) 混合发酵制作大豆干酪；

C) 再制涂抹型大豆干酪。

2. 如权利要求 1 所述的方法，其特征在于：所述步骤 A) 包括加入混合物总重量的 0.1 ～ 0.3% (w/v) 的小苏打以降低豆腥味。

3. 如权利要求 1 所述的方法，其特征在于：所述步骤 A) 还包括对豆乳进行超声处理。

4. 如权利要求 1 所述的方法，其特征在于：所述步骤 B) 包括接种乳酸菌发酵剂发酵和加 D- 葡萄糖酸 - δ - 内酯共同作用使豆乳形成凝乳。

5. 如权利要求 1 所述的方法，其特征在于：所述步骤 B) 还包括加入亲水胶体。

6. 如权利要求 5 所述的方法，其特征在于：所述亲水胶体选自：卡拉胶、果胶、黄原胶、瓜尔豆胶、CMC、魔芋粉、海藻酸钠和刺槐豆胶等。

7. 如权利要求 1 所述的方法，其特征在于：所述步骤 B) 还包括加入油脂。

8. 如权利要求 7 所述的方法，其特征在于：所述油脂为融化点接近或低于人体温的油脂，包括：半固态植物油如棕榈油、棕榈仁油、椰子油等；动物脂肪如猪油、黄油等；硬化植物油如大豆硬化油、氢化植物油等。

9. 如权利要求 4 所述的方法，其特征在于：所述步骤 B) 的乳酸菌发酵剂选自：嗜酸乳杆菌 Lactobacillus acidophilus、嗜热链球菌 Streptococcus thermophilus、干酪乳杆菌 Lactobacillus casei、保加利亚乳杆菌 Lactobacillus bulgaricus、双歧杆菌 Bifidobacterium、乳酸乳球菌乳亚种 Lactococcus lactis lactis 和乳酸链球菌 Streptococcus lactis 中的一种或多种。

10. 如权利要求 1 所述的方法，其特征在于：所述步骤 C) 包括蛋白酶解处理，所述蛋白酶选自：木瓜蛋白酶、菠萝蛋白酶、风味蛋白酶、中性蛋白酶、植物蛋白水解酶和碱性蛋白酶等。

11. 如权利要求 10 所述的方法，其特征在于：所述蛋白酶的加入量为 0.1 ～ 0.2% (w/w)。

12. 如权利要求 10 所述的方法，其特征在于：所述蛋白酶解处理安排在大豆干酪切碎融化后。

13. 权利要求 1 ～ 12 中任一项所述的方法制作的涂抹型大豆干酪。

一种涂抹型大豆干酪及其制作方法

技术领域

[0001] 本发明涉及食品工程领域，具体地说，是关于一种涂抹型大豆干酪及其制作方法。

背景技术

[0002] 随着奶酪涂抹面包逐渐成为一些国家，特别是亚洲国家的一种流行的新型食品食用方式，涂抹型食品（奶酪）的消费需求也随之增大。目前，大多数涂抹型奶酪都是以牛奶为主的动物奶源为原料生产的。然而，事实上，这种乳制品在很多国家的供应较少，并且由于适合饲养提供奶源的动物的土地资源越来越紧张，特别是受到环境的恶化和人口的快速增加的影响，在今后更会逐渐减少；再加上随着饮食健康观念及文化的多元化发展，现在世界上素食主义者也逐渐增多且构成了一个不容忽视的人群，对他们而言，传统的以动物奶源为原料的干酪将不再适用。另外，对于相当一部分人，在食用传统牛乳制品时由于缺乏β－半乳糖苷酶，不能水解和吸收乳糖从而导致了乳糖不耐症，引起腹部绞痛、腹胀、腹泻和恶心；以及一些人被发现对牛奶蛋白过敏。因而，寻求一种在满足普通人群消费的同时能适用于素质主义者、乳糖不耐症人群及对牛奶蛋白过敏人群的，具有类似于牛奶奶酪的质地及口感的植物蛋白来源干酪成了一个很大的创新研究点。

[0003] 众所周知，大豆的蛋白含量很高，可以作为很好的蛋白来源，相比动物奶源具有更大的生产潜力。在现有技术中，尝试添加豆乳代替部分牛乳生产混合奶酪，然而，在其特性上存在一些不理想的问题，例如不能消除豆制品的沙粒感，没有和牛奶涂抹奶酪相同的滑腻的质构，不能给人们感官上等同“奶酪”的感觉。

[0004] 在现有技术中，大豆干酪以豆腐或大豆蛋白、氢化植物油、水、盐类为原料混合融化制作而成，由于其未经发酵，不具备理想的涂抹性以及口中融化性，因而风味口感与牛奶奶酪相差甚远。为了使大豆干酪具有理想的涂抹性及口中融化性，需要添加一些牛乳制品成分，例如奶粉和奶酪。然而，要使不含牛乳制品成分的大豆干酪具备理想的涂抹性及口中融化性，需要克服一定的技术难点。由于大豆球蛋白的持水特性要高于酪蛋白，并在加热时易形成凝胶，因此得到的大豆蛋白凝胶涂抹性和口中融化性较差。与此同时，大豆制品容易形成豆腥味，且相比于牛乳制品的滑腻质构更倾向于形成颗粒质构，其品质和风味特性不够理想，因此有必要进一步加以改进。

发明内容

[0005] 本发明的首要目的就在于，提供一种具有很好风味特性、涂抹性与口中融化性的涂抹型大豆干酪产品。

[0006] 本发明的另一个目的在于，提供一种制作上述不添加任何牛乳制品成分的涂抹型大豆干酪的工艺方法。

[0007] 为实现上述目的，本发明的大豆干酪的制作方法包括以下步骤：

[0008] A）豆乳的制备；

[0009] B）混合发酵制作大豆干酪；

[0010] C) 再制涂抹型大豆干酪。

[0011] 根据本发明的优选实施例，所述步骤 A) 包括加入混合物总重量的 0.1 ～ 0.3% (w/v) 的小苏打以减少豆腥味。

[0012] 根据本发明，所述步骤 A) 还包括对豆乳进行了超声处理。

[0013] 根据本发明，所述步骤 B) 包括接种乳酸菌发酵剂发酵和加 D- 葡萄糖酸 - δ - 内酯共同作用使豆乳形成凝乳。

[0014] 根据本发明，所述步骤 B) 还包括加入亲水胶体；所述亲水胶体选自：卡拉胶、果胶、黄原胶、瓜尔豆胶、CMC、魔芋粉、海藻酸钠、刺槐豆胶等。

[0015] 根据本发明，所述步骤 B) 还包括加入油脂；所述油脂为融化点接近或低于人体温的植物油脂，包括：半固态植物油如棕榈油、棕榈仁油、椰子油等；硬化植物油如大豆硬化油、氢化植物油等。

[0016] 根据本发明，所述步骤 B) 的乳酸菌发酵剂选自：嗜酸乳杆菌 Lactobacillus acidophilus、嗜热链球菌 Streptococcus thermophilus、干酪乳杆菌 Lactobacillus casei、保加利亚乳杆菌Lactobacillus bulgaricus、双歧杆菌Bifidobacterium、乳酸乳球菌乳亚种 Lactococcus lactis lactis 和乳酸链球菌 Streptococcus lactis 中的一种或多种。

[0017] 根据本发明，所述步骤 C) 包括蛋白酶解处理，所述蛋白酶选自：木瓜蛋白酶、菠萝蛋白酶、风味蛋白酶、中性蛋白酶、植物蛋白水解酶、碱性蛋白酶等。优选的，所述蛋白酶的加入量为 0.1 ～ 0.2% (w/w)。

[0018] 根据一个优选实施例，所述蛋白酶解处理安排在大豆干酪切碎融化之后。

[0019] 本发明的涂抹型大豆干酪的制作方法具有以下特点：

[0020] 1、本发明的不添加任何牛乳制品成分制作的涂抹型大豆干酪，在风味特性、涂抹性以及口中融化性等方面具有如牛奶涂抹型奶酪一般的感官性质，克服了已有技术中以豆乳代替部分牛乳制作的混合干酪中存在的问题。

[0021] 2、本发明提供了一种在满足普通人群消费的同时能适用于素食主义者、乳糖不耐症人群及对牛奶蛋白过敏人群的涂抹型大豆干酪及其制作方法。

[0022] 3、由于大豆是一个营养价值丰富的高质量蛋白来源，在食品中已经广泛使用；因此本发明对于大豆干酪的开发具有非常重要的意义。

[0023] 4、大豆对人体健康有很多功效，如降低胆固醇，预防动脉硬化、癌症、糖尿病、骨质酥松症、肥胖症及肠道肾脏疾病，以及缓解女性更年期情况等。同时由于我国的大豆资源丰富，可以缓解对动物性奶源需求的压力。

[0024] 5、若不考虑到适用于素食主义者，根据本发明除应用植物油脂制作之外，添加动物脂肪如猪油、黄油等，都可以达到很好效果。

附图说明

[0025] 图 1 为本发明的大豆制作豆乳的流程图。

[0026] 图 2 为本发明的混合发酵制作大豆干酪的流程图。

[0027] 图 3 为本发明的涂抹型大豆干酪再制工艺的流程图。

[0028] 图 4 为本发明所述参加性能测试中的样品的 SDS-PAGE 分析结果图。

具体实施方式

[0029] 以下结合具体实施例，对本发明作进一步说明。应理解，以下实施例仅用于说明本发明而非用于限定本发明的范围。

[0030] 实施例 1、大豆干酪的制备

[0031] 1.1、豆乳的制备

[0032] 本实施例中，豆乳的制备参考常规的方法，区别主要在于过程中加入了小苏打以去除豆腥味以及采用了超声处理，具体如下：

[0033] 如图 1 所示，取东北大豆，洗净后在水中常温浸泡 12 ～ 18h，为了降低豆腥味，同时加入小苏打，加入量为混合物总重量的 0.1 ～ 0.3% (w/v)。

[0034] 浸泡后的大豆经加热煮沸 10min 后用清水清洗并去壳。使用热磨浆豆浆机，在 85℃、转速 11000rpm 的条件下将去壳的大豆间歇性磨浆 7 次，每次 30s，期间进行保温加热。为了增加豆乳溶解率和乳化作用，研磨后的豆乳经 4 层纱布过滤后降温至约 30℃，进行超声处理，频率为 40kHz，处理时间为 10 ～ 30min。

[0035] 制备过程中的具体条件如以下表 1 所示：

[0036] 表 1、豆乳的制备

[0037]

样品编号	1	2	3
浸泡时间（小时）	12	15	18
小苏打加入量 / 混合物总重量 (w/v)	0.3	0.2	0.1
超声处理时间（分钟）	10	20	30

[0038] 经测试，豆乳制备过程中加入混合物总重量的 0.1 ～ 0.3% (w/v) 的小苏打能够有效降低豆腥味，从而为后续进一步制成大豆干酪打下良好的基础。

[0039] 1.2、混合发酵制备大豆干酪

[0040] 本实施例中，大豆干酪是由接种乳酸菌发酵剂发酵和加 D- 葡萄糖酸 - δ - 内酯 (GDL) 共同作用使豆乳形成凝乳压榨而得。乳酸菌在发酵豆乳中的作用有产酸、产香、除臭去腥以及改善其营养价值。豆乳中含有大量的能导致胃胀气的低聚糖如棉子糖和水苏糖，而水解利用这些低聚糖需要 α - 半乳糖苷酶去水解其中的 α - 半乳糖苷键。因而利用具有较高 α - 半乳糖苷酶活性的微生物菌种发酵大豆产品不仅可以减少大豆产品中的可导致胃胀气的低聚糖含量，而且一些益生菌种可以将大豆蛋白水解成一些功能性短肽和氨基酸，提高其营养价值。

[0041] 双歧杆菌和乳酸杆菌如发酵乳杆菌和嗜酸乳杆，都是较为理想的菌种。而 D- 葡萄糖酸 - δ - 内酯 (GDL) 具有很好的凝固豆乳的能力，因此本实施例中以乳酸菌发酵和添加 GDL 相结合，以致力于提高大豆干酪的营养价值以及凝乳块的性能。，同时使形成的凝乳块较为柔滑，风味较好。

[0042] 本实施例的混合发酵豆乳制备大豆干酪的过程如图 2 所示，具体如下：

[0043] 将 1.1 中所得豆乳加热至 60 ～ 80℃；

[0044] 为改善豆乳质构，加入亲水胶体，加入量为 0.05 ～ 0.20％（w/v），优取卡拉胶，在 1000rpm 的条件下搅拌溶解 20min；

[0045] 为提高豆乳的脂肪含量，使得最终产品有较好的涂抹性和口中融化性，需要加入一定的融化点接近或低于人体温的油脂，如：半固态植物油如棕榈油、棕榈仁油、椰子油等；硬化植物油如大豆硬化油、氢化植物油等，这里优选椰子油或棕榈油，本实施例的样品 1-9 分别为棕榈油、棕榈油、棕榈仁油、棕榈仁油、椰子油、椰子油、大豆硬化油、大豆硬化油、氢化植物油，添加量在 1 ～ 3％（w/v），在 1000rpm 的条件下搅拌溶解 20min；

[0046] 然后对混合物进行均质，均质压力为 10 ～ 120MPa；

[0047] 降温至 37℃后，接种入乳酸菌发酵剂，所述发酵剂菌种可以发酵豆乳产酸，加入量在 2 ～ 4％（v/v），发酵温度为 37 ～ 42℃；

[0048] 为了增加凝乳能力，一般在乳酸菌发酵 1.5 ～ 2.0h 时，当经乳酸菌发酵豆乳的滴定酸度达到约 0.20％（乳酸）时，加入 GDL，加入量为 0.2 ～ 0.3％（w/v）。如乳酸菌预发酵过程过短达不到发酵利用低聚糖效果，过长导致凝乳形成，不利于 GDL 加入作用，然后将豆乳升温至 45 ～ 55℃；

[0049] 凝乳 1h 后进行切割，切割大小约为 5 ～ 10mm，边切割边排除乳清，切割时间为 5 ～ 10min；

[0050] 将所得凝乳块用四层纱布包裹并置于压榨模具（15×15×5cm）中进行压榨定型，压力为 0.3 ～ 0.8MPa，由小到大逐渐增压，时间为 10 ～ 20min，获得大豆干酪块，冷藏待用。

[0051] 其中，所使用的乳酸菌发酵剂由 12％（w/v）脱脂奶粉水溶液，灭菌后接种 0.06％（w/v）的菌种，经 37℃发酵 18h 获得，所用菌种均购自丹尼斯克（中国）有限公司。

[0052] 制备过程中的具体条件如以下表 2 所示：

[0053] 表 2、混合发酵制备大豆干酪

[0054]

样品编号	1	2	3	4	5	6	7	8	9
亲水胶体（w/v）	0.05	0.125	0.2	0.05	0.125	0.2	0.05	0.125	0.2
油脂（w/v）	1	2	3	1	2	3	1	2	3
乳酸菌菌种	嗜酸乳杆菌 *Lactobacillus acidophilus*：双歧杆菌 *Bifidobacterium*=1：1			嗜热链球菌 *Streptococcus thermophilus*：干酪乳杆菌 *Lactobacillus casei*=1：1			保加利亚乳杆菌 *Lactobacillus bulgaricus*：乳酸乳球菌乳亚种 *Lactococcus lactis lactis*：乳酸链球菌 *Streptococcus lactis*=1：1：1		
乳酸菌发酵剂（w/v）	2	3	4	2	3	4	2	3	4
发酵温度（℃）	37	40	42	37	40	42	37	40	42
GDL（w/v）	0.2	0.25	0.3	0.2	0.25	0.3	0.2	0.25	0.3

[0055] 经过对获得的大豆干酪进行测试后发现，由于 GDL 具有很好的凝固豆乳的能力，过程中添加 GDL 后，形成的凝乳块较为柔滑，风味较好。同时，经过比较，单独使用乳酸菌发

酵豆乳凝乳或 GDL 凝固豆乳得到的大豆干酪块，其产品质构效果不甚理想；而结合微生物菌种发酵与 GDL 共同使用进行凝乳，不仅可以减少胃胀气低聚糖的负面影响，而且所得的大豆干酪最终产品具有很好的质构及风味。

[0056] 1.3、再制工艺制备涂抹型大豆干酪

[0057] 豆乳一般在经过蛋白酶处理后可以达到脱腥作用，减少豆腥味；但是在发酵凝乳之前使用蛋白酶处理豆乳的话会影响凝乳的形成，因而不适用在大豆干酪发酵过程中采用酶解处理。经过实验研究发现，不经过酶处理工艺而得的大豆干酪其在质构性质上不够理想，而酶处理安排在不同的加工顺序位置，会有不同的效果。本实施例通过研究在不同的加工顺序位置的酶处理，最终确定了将酶处理在发酵凝乳之后进行，从而避免酶处理在发酵之前使用时对于凝乳形成的影响。

[0058] 如图 3 所示，将 1.2 制备的大豆干酪经过以下步骤制成涂抹型大豆干酪，具体如下：

[0059] 取一定量的上述所得的大豆干酪，切碎加热融化，加热温度为 70 ～ 100℃，加热时间为 10 ～ 20min，同时进行搅拌；

[0060] 降温至 35 ～ 50℃；

[0061] 加入蛋白酶制剂进行酶处理，优选木瓜蛋白酶或菠萝蛋白酶，添加量为 0.1 ～ 0.2％ (w/w)，处理时间为 4 ～ 5min，同时进行搅拌；

[0062] 然后进行升温处理，加热温度为70℃～ 100℃，处理时间为 2 ～ 10min，同时进行搅拌；

[0063] 加入油脂和适量水，所述油脂种类与 1.2 中所取种类保持一致，添加量为 10 ～ 20％ (w/w)，在 1500rpm 的条件下搅拌 2min；

[0064] 加入乳化盐和盐，所述乳化盐优选多聚磷酸钠：磷酸三钠：柠檬酸钠＝ 2 ： 2 ： 1，总添加量为 2 ～ 2.5％ (w/w)，所述盐加入量为 0.03％ (w/w)，在 1500rpm 的条件下搅拌 20min；

[0065] 然后进行搅拌熔融，温度为 70 ～ 100℃，搅拌速度为 1000 ～ 1500rpm，时间为 10 ～ 25min，充填包装，快速冷却后成品贮藏。

[0066] 制备过程中的具体条件如以下表 3 所示：

[0067] 表 3、再制工艺制备涂抹型大豆干酪

[0068]

样品编号	1	2	3	4	5	6	7	8	9	10	11	12
酶处理温度（℃）	35	40	45	50	35	40	45	50	35	40	45	50
酶	木瓜蛋白酶				菠萝蛋白酶				风味蛋白酶			
酶加入量(w/w)	0.1	0.1	0.2	0.2	0.1	0.1	0.2	0.2	0.1	0.1	0.2	0.2
酶处理时间（分钟）	5	5	4	4	5	5	4	4	5	5	4	4
油脂(w/w)	10	10	20	20	10	10	20	20	10	10	20	20
乳化盐总加入量（w/w）	2	2	2.5	2.5	2	2	2.5	2.5	2	2	2.5	2.5

[0069] （续表 3）

[0070]

样品编号	13	14	15	16	17	18	19	20	21	22	23	24
酶处理温度（℃）	35	40	45	50	35	40	45	50	35	40	45	50
酶	中性蛋白酶				植物蛋白水解酶				碱性蛋白酶			
酶加入量(w/w)	0.1	0.1	0.2	0.2	0.1	0.1	0.2	0.2	0.1	0.1	0.2	0.2
酶处理时间（分钟）	5	5	4	4	5	5	4	4	5	5	4	4
油脂(w/w)	10	10	20	20	10	10	20	20	10	10	20	20
乳化盐总加入量（w/w）	2	2	2.5	2.5	2	2	2.5	2.5	2	2	2.5	2.5

[0071] 经测试，采用限制性酶解的大豆干酪为原料而制成的大豆干酪能够改善大豆制品的质构，不仅能消除以往大豆制品中存在的沙粒感的不足，形成和牛奶制品相似的滑腻的质构，而且由于大分子蛋白经酶解降解成小分子蛋白或肽段，更有利食用后的消化和吸收。

[0072] 实施例 2、性能测试

[0073] 为了研究其性能差异，对不同工艺制备的大豆干酪的性能进行测试。其中添加的胶体为卡拉胶 CH515（购自丹尼斯克（中国）有限公司），添加油脂为椰子油，乳酸菌发酵剂由脱脂牛奶接种 0.06％（w/v）的菌种（嗜酸乳杆菌 NCFM™：双歧杆菌 HOWARUTM Bifido＝1：1，购自丹尼斯克（中国）有限公司），经 37℃发酵 18h 而得；所用蛋白酶为木瓜蛋白酶。

[0074] 2.1、样品制备

[0075] 用于性能测试的样品制备过程如下：

[0076] 经乳酸菌 37℃发酵凝乳，然后切割排乳清压榨得大豆干酪样品 A，经 1.3 再制工艺得涂抹型大豆干酪样品 A#；

[0077] 经加入 GDL 50℃凝乳，然后切割排乳清压榨得大豆干酪样品 B，经 1.3 再制工艺得涂抹型大豆干酪样品 B#；

[0078] 经 1.2 乳酸菌和 GDL 混合工艺发酵凝乳，然后切割排乳清压榨得大豆干酪样品 C，经 1.3 再制工艺得涂抹型大豆干酪样品 C#；

[0079] 经 1.2 乳酸菌和 GDL 混合工艺发酵凝乳，然后切割排乳清压榨得大豆干酪样品 D，不经过酶处理过程，直接加油脂、乳化盐搅拌得涂抹型大豆干酪样品 D#。

[0080] 2.2、化学分析

[0081] 对 2.1 获得大豆干酪和涂抹型大豆干酪样品进行化学分析，结果如表 4 所示。

[0082] 表 4、化学分析

[0083]

样品编号	脂肪含量 (g/100 g)	总蛋白含量 (g/100g)	水分含量 (g/100g)	盐含量 (g/100g)	灰分 (g/100g)	pH 值
A	20.37±0.02	22.39±0.02	56.29±0.56	-	0.53±0.01	4.68±0.02
B	18.51±0.02	19.72±0.01	57.58±0.30	-	0.26±0.01	5.81±0.03
C	20.24±0.02	20.11±0.02	55.26±0.16	-	0.96±0.01	4.80±0.02
D	20.24±0.02	20.11±0.02	55.26±0.16	-	0.96±0.01	4.80±0.02
A#	25.32±0.02	17.60±0.02	49.62±0.27	0.3±0	1.72±0.01	6.55±0.01
B#	23.94±0.02	17.10±0.02	51.09±0.36	0.3±0	1.30±0.01	7.20±0.02
C#	26.74±0.02	19.48±0.03	48.29±0.43	0.3±0	1.56±0.01	6.54±0.02
D#	26.80±0.02	17.20±0.02	59.15±0.20	0.3±0	1.53±0.01	6.63±0.02

[0084] 由表 4 的结果可见，不同的大豆干酪制备工艺对涂抹型大豆干酪的影响差异较大，其中，经乳酸菌和 GDL 混合发酵凝乳所制备大豆干酪的性能比其他单一的乳酸菌发酵或 GDL 工艺凝乳方式更优异，同时，相对比 C# 和 D# 样品之间的差异可知，酶解工艺对于涂抹型大豆干酪的性能也有重要的影响。

[0085] 2.3、SDS-PAGE

[0086] 对 2.1 获得的大豆干酪和涂抹型大豆干酪样品进行 SDS-PAGE 分析，结果如图 4 所示。由蛋白凝胶电泳的结果可知，酶处理过程将大分子量的大豆蛋白酶解成小分子量的蛋白或肽段，可以更好地溶解和被吸收，说明酶解工艺能有效解决了以往大豆产品的沙粒感缺陷。

[0087] 2.4、TPA 质构分析

[0088] 对 2.1 获得的大豆干酪和涂抹型大豆干酪样品进行 TPA 质构分析，结果如表 5 所示。

[0089] 表 5、TPA 质构分析

[0090]

样品编号	硬度	粘着性	弹性	内聚性	黏附性	咀嚼性	回复性
A#	287.456	-438.222	0.910	0.489	140.685	128.081	0.041
B#	217.407	-663.147	0.896	0.595	129.367	115.895	0.046
C#	378.365	-1384.114	0.915	0.567	245.656	186.704	0.039
D#	433.122	-1289.201	0.906	0.539	204.003	222.509	0.046

[0091] 如表 5 所示，经不同工艺制备的涂抹型大豆干酪的 TPA 质构特性差异明显。综合而言，涂抹型大豆干酪样品 C# 在粘着性、黏附性及回复性上都显著优于其他样品，且硬度较为适中，而与样品 C# 较为接近的为样品 D#，样品 A# 和 B# 都次之较远，说明前面混合发酵凝乳制备大豆干酪的工艺与单一的乳酸菌发酵或 GDL 工艺相比具有显著优势，而酶处理工艺对改善质构有着进一步的作用。

[0092] 2.5、感官分析

[0093] 由 10 位专业人员组成的小组对各样品进行了感官品评分析，参数包括了涂抹型大豆干酪的外观、颜色、风味、融化性、硬度、涂抹性以及总体的印象评分，每项为 9 分制，结果如表 6 所示。

[0094] 表 6、感官评定

[0095]

感官参数	样品			
	A#	B#	C#	D#
外观	6.9±0.6	6.9±0.6	7.3±0.7	7.0±0.7
颜色	6.8±0.4	6.9±0.6	7.2±0.6	7.4±0.5
风味	6.9±0.6	6.7±0.7	7.2±0.8	6.5±0.9
融化性	7.3±0.5	7.1±0.7	7.5±0.5	7.2±0.8
硬度	5.9±0.6	6.0±0.7	6.0±0.5	6.8±0.6
涂抹性	7.1±0.6	6.9±0.6	7.5±0.5	6.3±0.5
总体印象评价	6.8±0.6	6.6±0.7	7.4±0.5	6.3±0.5

[0096] 由表 6 的结果可知，样品 C#，即由本发明所表述的工艺制备的涂抹型大豆干酪具有更优的感官接受性。

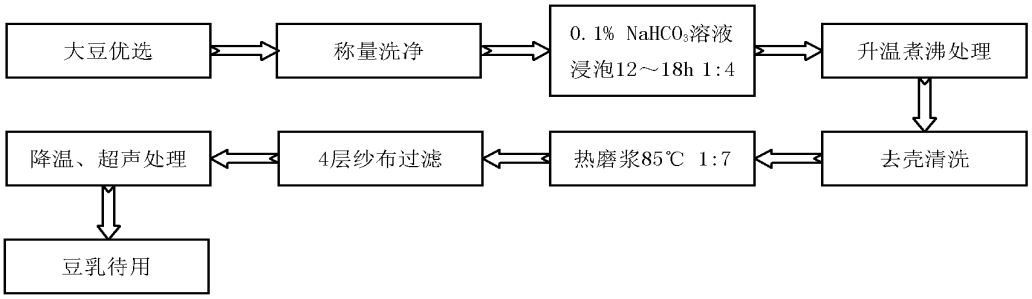
大豆优选
称量洗净
0.1% NaHCO3溶液
浸泡12～18h 1:4
升温煮沸处理
去壳清洗
热磨浆85℃ 1:7
4层纱布过滤
降温、超声处理
豆乳待用

图 1

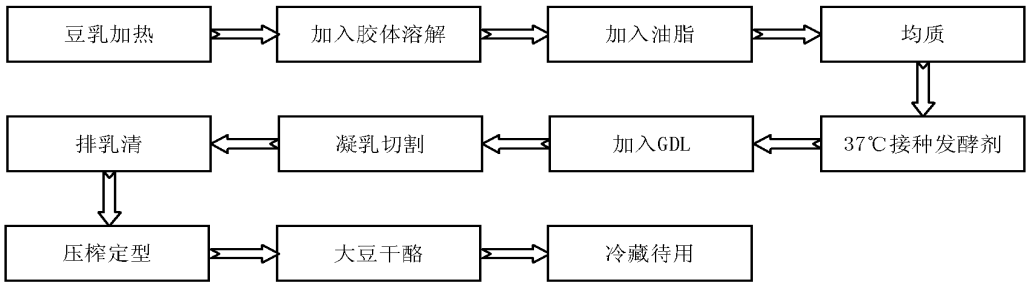
豆乳加热
加入胶体溶解
加入油脂
均质
37℃接种发酵剂
加入GDL
凝乳切割
排乳清
压榨定型
大豆干酪
冷藏待用

图 2

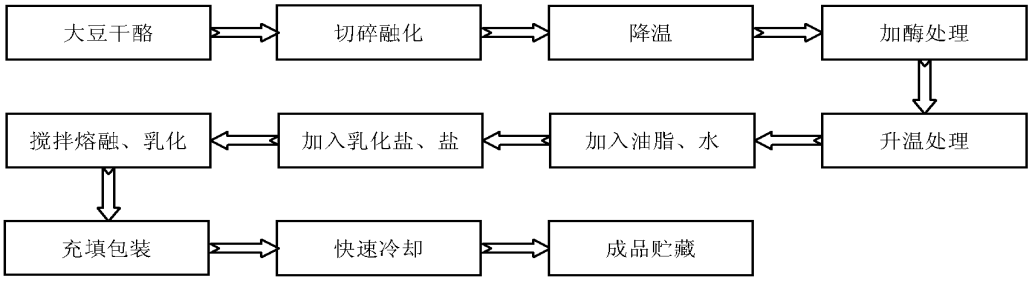
大豆干酪
切碎融化
降温
加酶处理
升温处理
加入油脂、水
加入乳化盐、盐
搅拌熔融、乳化
充填包装
快速冷却
成品贮藏

图 3

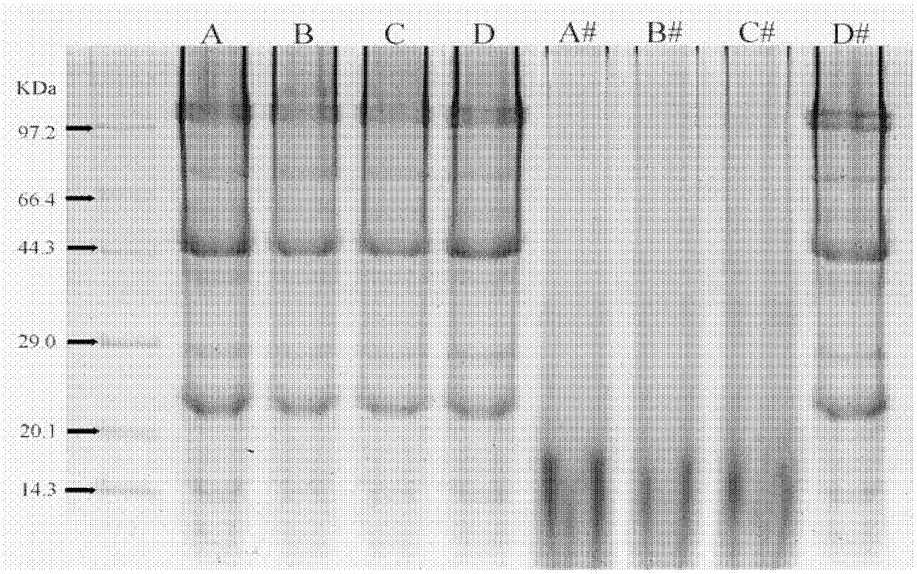

图 4

Espacenet

Bibliographic data: CN102578544 (A) — 2012-07-18

Seasoning as well as preparation method and use method thereof

Inventor(s):	LIANCHENG LI ± (LI LIANCHENG)	
Applicant(s):	LIANCHENG LI ± (LI LIANCHENG)	
Classification:	**- international:**	***A23L27/24; A23L33/00***
	- cooperative:	
Application number:	CN2012155709 20120306	Global Dossier
Priority number(s):	CN2012155709 20120306	

Abstract of CN102578544 (A)

The invention relates to a seasoning capable of improving the color, the flavor and the taste of fish, meat, vegetables and the like as well as a preparation method and a use method of the seasoning. The seasoning provided by the invention is characterized by comprising distiller's yeast, common salt and water, and the seasoning is healthy and has the advantages that the color, flavor and taste effects of food materials are obviously improved, and in addition, the seasoning is suitable for both old people and young people. The seasoning is suitable for being used by families, hotels, dining halls and the like during cooking.

(19)中华人民共和国国家知识产权局

(12)发明专利申请

(10)申请公布号 CN 102578544 A
(43)申请公布日 2012.07.18

(21)申请号 201210055709.2

(22)申请日 2012.03.06

(71)申请人 李连成
地址 116023 辽宁省大连市高新园区爱贤街22号

(72)发明人 李连成

(74)专利代理机构 大连科技专利代理有限责任公司 21119
代理人 龙锋

(51)Int.Cl.
A23L 1/23(2006.01)
A23L 1/29(2006.01)

权利要求书 1 页 说明书 5 页

(54)发明名称

一种调味品及其制备方法和使用方法

(57)摘要

本发明涉及一种可提高鱼、肉、蔬菜等色香味的调味品及其制备方法和使用方法。本发明的调味品的特征在于含有酒曲、食盐和水，是一种提高食材色香味效果显著而且老少皆宜的健康型调味品，适合于家庭、饭店、食堂等在烹饪时使用。

CN 102578544 A

1. 一种调味品，其特征在于，所述调味品含有酒曲、食盐和水。

2. 根据权利要求 1 所述的调味品，其中，所述调味品的盐度为 8-10 质量 %，固形物含量为 38-42 质量 %，pH 为 4.3-4.7。

3. 根据权利要求 1 或 2 所述的调味品，其中，所述调味品中含有的水为山楂的水提取物。

4. 一种调味品的制备方法，其特征在于，所述制备方法包括如下工序：

（1）在蒸煮后的粮食中加入种曲菌进行发酵来制备种酒曲的工序；

（2）将由工序（1）得到的种酒曲与食盐均匀混合后，再加入水混合的工序；

（3）将由工序（2）得到的混合物进行发酵、熟化的工序。

5. 根据权利要求 4 所述的制备方法，其中，在工序（2）中，相对于 1 质量份的

种酒曲，食盐的加入量为 0.2-0.3 质量份，水的加入量为 1-1.5 质量份。

6. 根据权利要求 4 所述的制备方法，其中，在工序（1）中，发酵温度保持在 30-35℃，发酵时间为 48 小时以下；在工序（3）中，发酵温度保持在 20-30℃，发酵时间为 5-10 天。

7. 根据权利要求 4-6 中任意一项所述的制备方法，其中，在工序（2）中加入的水为山楂的水提取物。

8. 一种调味品的使用方法，其特征在于，将食材与权利要求 1-3 中任意一项所述的调味品混合、放置后，再对食材进行烹制或直接食用。

9. 根据权利要求 8 所述的使用方法，其中，将附着在食材上的调味品去除后再进行烹制或直接食用。

10. 根据权利要求 8 或 9 所述的使用方法，其中，所述食材选自鱼、肉或蔬菜。

一种调味品及其制备方法和使用方法

技术领域

[0001] 本发明涉及一种调味品及其制备方法和使用方法，具体而言是涉及一种可提高鱼、肉、蔬菜等色香味的调味品及其制备方法和使用方法，属于食品技术领域。

背景技术

[0002] 目前市场上有很多种类的调味品，如化学调味品、天然香辛调味品、复合调味品等。

[0003] 味精是人们常用的增鲜增味调味品。但使用味精有很多限制，使用不当甚至会对人体产生危害。味精为碱性物质，在酸性环境中不易溶解，因此在烹制糖醋、醋熘等酸性强的菜肴时，不宜使用。在含碱性原料的菜肴中也不宜使用味精，因为味精遇碱会化合成谷氨酸二钠，产生氨水臭味。而且，由于味精在高温下会分解为焦谷氨酸钠，危害人体健康，因此也不宜长时间高温加热。另外，还有研究表明，味精可能会引起胎儿缺陷，因此婴幼儿和正在哺乳期的母亲不宜吃味精。

[0004] 嫩肉粉也是人们所熟悉的调味品，它主要用于提高动物性食材的嫩度，并增鲜增味。但在嫩肉粉中通常都含有作为防腐剂和肉类发色剂的亚硝酸盐，过量食用将会导致亚硝酸盐中毒。亚硝酸盐是剧毒物质，它能使血液中正常携氧的低铁血红蛋白氧化成高铁血红蛋白，因而失去携氧能力而引起组织缺氧，成人摄入 0.2-0.5 克即可引起中毒，3 克即可致死。亚硝酸盐同时还是一种致癌物质，据研究，食道癌与患者摄入的亚硝酸盐量呈正相关性。

[0005] 随着人们生活水平的不断提高和对食品安全的不断重视，人们对健康型调味品的渴求越来越强烈。

发明内容

[0006] 本发明的目的在于提供一种用于提高鱼、肉、蔬菜等色香味的健康型调味品及其制备方法和使用方法。

[0007] 本发明的调味品含有酒曲、食盐和水。其中，调味品的盐度优选为 8-10 质量 %，固形物含量优选为 38-42 质量 %，pH 优选为 4.3-4.7。另外，本发明的调味品中含有的水优选为山楂的水提取物。

[0008] 酒曲中含有各种酶，不但可适当分解动物性食材的结缔组织、肌纤维中的胶原蛋白及弹性蛋白等，也可适当分解植物性食材的植物蛋白和纤维等，并将之部分水解为氨基酸等增鲜物质，因而使用本发明的调味品可获得嫩而不韧、味道鲜美的效果，提高食材的“香”和“味”。而且本申请的发明人发现，使用本发明的调味品还可改善食材外观，提高食材的“色”。另外，本发明的调味品中不含亚硝酸盐等有害物质，含有的食盐可起到防腐作用。因此，本发明的调味品是一种提高食材色香味效果显著而且老少皆宜的健康型调味品。

[0009] 本发明的调味品的制备方法包括如下工序：

（1）在蒸煮后的粮食中加入种曲菌进行发酵来制备种酒曲的工序；

（2）将由工序（1）得到的种酒曲与食盐均匀混合后，再加入水混合的工序；

（3）将由工序（2）得到的混合物进行发酵、熟化的工序。

[0010] 在工序（1）中，发酵温度优选保持在 30-35℃，发酵时间优选为 48 小时以下。在工序（2）中，相对于 1 质量份的种酒曲，食盐的加入量优选为 0.2-0.3 质量份，水的加入量优选为 1-1.5 质量份；另外，加入的水优选为山楂的水提取物。在工序（3）中，发酵温度优选保持在 20-30℃，发酵时间优选为 5-10 天。

[0011] 本发明的制备方法工艺简单，不但适合小型生产，也适合大规模化生产。

[0012] 本发明的调味品的使用方法是将食材与本发明的调味品混合、放置后，再对食材进行烹制或直接食用的方法。其中，优选将附着在食材上的调味品去除后再进行烹制或直接食用，所述食材优选为鱼、肉或蔬菜。

[0013] 本发明的使用方法非常简单易操作，只需将本发明的调味品与食材混合即可做出味美且健康的菜肴来，适合于家庭、饭店、食堂等在烹饪时使用。

具体实施方式

[0014] 调味品]

本发明的调味品含有酒曲、食盐和水。

[0015] 由于酒曲中含有大量微生物分泌产生的蛋白酶、淀粉酶等，当使用本发明的调味品调制鱼、肉、蔬菜等食材时，不但可适当分解鱼、肉的结缔组织、肌纤维中的胶原蛋白及弹性蛋白等，也可适当分解蔬菜的纤维和植物蛋白等，因此可以软化肉质，大大提高食材的嫩度，特别是对肉质较老的食材效果更为显著。另外，由于食材中一部分淀粉、纤维和蛋白质被水解为糖和氨基酸（增鲜物质），因此可以达到味道鲜美的效果，提高食材的“香”和“味”。

[0016] 此外，虽然原理并不清楚，但本申请的发明人发现，使用本发明的调味品还可改善食材外观，使鱼类食材看起来更为鲜亮，肉类食材看起来更为红润，蔬菜类食材看起来更为鲜嫩，提高食材的“色”，促进食欲。

[0017] 对本发明的调味品中的盐度没有特别限制，但优选为 8-10 质量 %。当盐度保持在上述范围时，可以得到保存性良好且咸度适中的调味品。本发明的调味品中不必另外添加作为防腐剂的亚硝酸盐等有害物质。

[0018] 对本发明的调味品中的固形物含量也没有特别限制，但优选为 38-42 质量 %。当固形物含量保持在上述范围时，可以得到酒曲浓度和盐度合适的调味品。

[0019] 由于本发明的调味品是经发酵得到的，而发酵一般是在酸性条件下进行的，因此本发明的调味品的 pH 一般在 4.3-4.7 的范围内。

[0020] 另外，本发明的调味品中含有的水优选为山楂的水提取物。山楂味酸、甘、性温，不仅营养价值丰富，还有助消化、增食欲、消积食等药用价值。而且，山楂还具有软化肉质、去除肉类异味的作用，与肉同食有很好的效果。

[0021] 综上所述，本发明的调味品是一种提高食材色香味效果显著而且老少皆宜的健康型调味品，具有良好的社会和经济效益，市场前景广阔。

[0022] [制备方法]

本发明的调味品的制备方法包括如下工序：

（1）在蒸煮后的粮食中加入种曲菌进行发酵来制备种酒曲的工序；

（2）将由工序（1）得到的种酒曲与食盐均匀混合后，再加入水混合的工序；

（3）将由工序（2）得到的混合物进行发酵、熟化的工序。

[0023] 工序（1）是制备种酒曲的传统方法，具体是在蒸煮后的粮食中加入种曲菌，通过发酵来制备种酒曲。

[0024] 对用于制备种酒曲的粮食没有特别限制，可列举稻类（水稻等）、麦类（小麦、大麦、燕麦等）、谷类（粟、黍等）、豆类（大豆、蚕豆、豌豆、绿豆等）、薯类（红薯、马铃薯、山药等）、玉米、高粱等。其中的稻类、麦类等带壳的粮食需经脱壳处理后再进行蒸煮。

[0025] 对于使用的种曲菌没有特别限制，只要是制酒用的种曲菌即可，可自制，也可买市售的商品。其用量可根据使用的粮食种类、发酵温度和时间等适当调节，一般为 2g 种曲菌/kg 蒸煮后的粮食。

[0026] 在工序（1）中，发酵温度优选保持在 30-35℃，发酵时间优选为 48 小时以下。通过将发酵温度和时间保持在上述范围，可得到微生物含量高且代谢能力强的种酒曲。发酵过程中还要适当翻动发酵物，以保证发酵均匀、完全。

[0027] 工序（2）将由工序（1）得到的种酒曲与食盐均匀混合后，再加入水混合的工序。要注意在盛装该混合物及发酵该混合物的过程中避免使用不锈钢或其他金属制容器，例如可以使用塑料容器。

[0028] 首先将种酒曲搅拌开，加入食盐后，使二者均匀混合。食盐在酒曲发酵过程中可以抑制杂菌生长，并在调味品中起到调味的作用。对于食盐用量没有特别限制，但如果食盐用量过少，在工序（3）的发酵过程中杂菌生长难以得到抑制而导致得不到所需的酒曲，从而造成发酵失败。如果过高，对酒曲的发酵也会产生不良影响，而且得到的调味品会过咸。因此，从保存性和调味性二者来看，相对于 1 质量份的种酒曲，食盐的加入量优选为 0.2-0.5 质量份，更优选为 0.2-0.3 质量份。

[0029] 接下来，在种酒曲和盐的混合物中加入水，并充分混合。虽然对水的用量没有特别限制，但以刚刚没过种酒曲和盐的混合物为宜，一般来讲，相对于 1 质量份的种酒曲，水的加入量优选为 1-2 质量份，更优选为 1-1.5 质量份。如果水量过少，处于表面的种酒曲有可能暴露在空气中，造成发酵不完全。如果水量过多，则会造成盐度降低，使保存性下降。

[0030] 另外，在工序（2）中加入的水优选为山楂的水提取物。山楂的水提取物可按常规方法制备，例如将鲜山楂洗净去核后加入适量水，文火熬煮至山楂烂熟后，再用过滤设备将山楂肉和皮等过滤掉，得到的汁液即可作为山楂的水提取物。对山楂的水提取物的浓度没有特别限制，可依口味适当调节。

[0031] 工序（3）是将由工序（2）得到的混合物进行发酵、熟化的工序。

[0032] 在工序（3）中，发酵温度优选保持在 20-30℃，更优选保持在 25-30℃。发酵时间优选为 5-10 天，更优选为 7-10 天。通过将发酵温度和时间保持在上述范围，可得到充分发酵和熟化的酒曲。

[0033] 在发酵、熟化过程中，最好大概以每日 1-2 次的频度翻动发酵物，使之与空气接触，以保证发酵、熟化充分。另外，在发酵、熟化的初期阶段，由于种酒曲吸水而造成水量减少，可以适当添加水，使水总保持为刚刚没过发酵物的程度，并充分混合。

[0034] 本发明的制备方法具有工艺简单、配方简单的特点，不但适合小型生产，也适合大规模化生产。

[0035] [使用方法]

本发明的调味品的使用方法是将食材与调味品混合、放置后，再对食材进行烹制或直接食用的方法。所述食材可使用鱼、肉或蔬菜。

[0036] 对混合方法没有特别限制，可依食材大小而定，当为体积较大的食材时，一般采用将调味品涂抹在食材上的方法。当为体积较小的食材时，一般采用将食材包埋在调味品中的方法、或者取适量的调味品加到食材中后搅拌均匀的方法。

[0037] 对放置时间也没有特别限制，一般为 2 小时以上，优选为 3 小时以上。

[0038] 调味品用量可依口味适当调节，但一般以食材重量的 7-10% 为宜。

[0039] 经调制后的食材可直接进行烹制或食用，也可先将附着在食材上的调味品去除后再进行烹制或食用。例如，使用本发明的调味品拌制蔬菜沙拉时，先将蔬菜切成小块，加入本发明的调味品搅拌均匀，放置 2 小时后，可直接食用，也可从菜肴美观性的角度出发，将附着在食材上的调味品去除后再直接食用。另外，由于酒曲在高温下容易变焦，因此在煎炸食材时，优选将食材上的调味品去除后再进行烹制。

[0040] 本发明的使用方法非常简单易操作，只需将食材与本发明的调味品混合、放置即可做出味美且健康的菜肴来，适合于家庭、饭店、食堂等在烹饪时使用。

实施例

[0041] 下面通过实施例和比较例对本发明进行详细说明，但本发明不受这些实施例的限制，在符合前后宗旨的范围内，可作适当变化。

[0042] 实施例 1

在煮好的大米饭中加入自制的种曲菌（2g 种曲菌 /kg 大米饭），在 35℃的条件下发酵 48 小时，并在发酵过程中每日翻动发酵物，得到种酒曲（工序（1））。取塑料盒，向其中加入 300g 制得的种酒曲，将酒曲搅拌开后，向其中加入 60g 食盐均匀混合，再加入 300g 温水（30℃）充分混合（工序（2））。将得到的混合物在 25℃的条件下发酵 1 星期，每天搅拌 1-2 次，并在初期阶段适当添加水，使水总保持为刚刚没过发酵物的程度，得到调味品 1（工序（3））。调味品 1 的盐度为 9 质量 %，固形物含量为 40 质量 %，pH 为 4.5。

[0043] 取鳕鱼、牛肉切成小块，芹菜切成小段，以食材重量 10% 的比例，将调味品 1 分别加到各个食材中搅拌均匀，放置 2 小时后，经厨师烹制，烹制的菜肴请 10 个志愿者进行品尝。按照菜肴鲜美、软嫩程度，分为 +、++、+++、++++ 四个级别（6 人以上均一致评价的级别作为最后结果），结果如表 1 所示。

[0044] 实施例 2

将 100g 鲜山楂洗净去核后加入 100g 水，文火熬煮至山楂烂熟后，再用硅藻土过滤器（青岛光大装备科技有限公司制造）将山楂肉和皮等过滤掉，得到的汁液即为山楂的水提取物。除了将制备调味品 1 的工序（2）中使用的水替换为该山楂的水提取物以外，其余的制备工序与实施例 1 同样，得到调味品 2。调味品 2 的盐度为 9 质量 %，固形物含量为 39 质量 %，pH 为 4.3。

[0045] 除了将调味品 1 换成调味品 2 之外，其他与实施例 1 同样，菜肴的其他辅料相同，并经同一厨师对各个食材进行烹制，请同样的志愿者进行品尝，评价结果如表 1 所示。

[0046] 比较例 1

Case No.: IPR2023-00208
U.S. Patent No. 10,039,306

除了不使用调味品 1 之外，其他与实施例 1 同样，菜肴的其他辅料相同，并经同一厨师对各个食材进行烹制，请同样的志愿者进行品尝，评价结果如表 1 所示。

[0047] 比较例 2

除了将调味品 1 换成味精并将其用量调整为食材重量的 0.5% 之外，其他与实施例 1 同样，菜肴的其他辅料相同，并经同一厨师对各个食材进行烹制，请同样的志愿者进行品尝，评价结果如表 1 所示。

[0048] [表 1]

实施例或比较例	实施例 1			实施例 2			比较例 1			比较例 2		
食材	鳕鱼	牛肉	芹菜	鳕鱼	牛肉	芹菜	鳕鱼	牛肉	芹菜	鳕鱼	牛肉	芹菜
鲜美程度	+++	+++	+++	+++	+++	+++	+	+	+	++	++	++
软嫩程度	+++	+++	+++	+++	++++	+++	+	+	+	+	+	+

从表 1 的结果可以看出，与未使用本发明的调味品的菜肴（比较例 1）和仅使用了味精的菜肴（比较例 2）相比，使用了本发明的调味品的菜肴（实施例 1 和 2）不但味道鲜美，而且肉质软嫩，口感非常好。此外，使用了本发明的调味品的菜肴（实施例 1 和 2）色彩更为鲜亮，很有食欲。

Motif Exhibit 1148, Page 2277 of 3341

Espacenet

Bibliographic data: CN102835460 (A) — 2012-12-26

Smearing cheese analogue and preparation method thereof

Inventor(s): GAO HONGYAN; LIU ZHENMIN; MO BEIHONG; XIAO YANG; CHEN SHUAI; SHI CHUNQUAN; ZHENG YUANRONG; SUN KEJIE; GUO BENHENG ± (GAO HONGYAN, ; LIU ZHENMIN, ; MO BEIHONG, ; XIAO YANG, ; CHEN SHUAI, ; SHI CHUNQUAN, ; ZHENG YUANRONG, ; SUN KEJIE, ; GUO BENHENG)

Applicant(s): BRIGHT DAIRY & FOOD CO LTD ± (BRIGHT DAIRY & FOOD CO., LTD)

Classification: **- international:** ***A23C20/02***
- cooperative:

Application number: CN20111168270 20110621 Global Dossier

Priority number(s): CN20111168270 20110621

Also published as: CN102835460 (B)

Abstract of CN102835460 (A)

The invention discloses a smearing cheese analogue and a preparation method thereof. The smearing cheese analogue comprises the following raw materials, by weight: 15%-28% of vegetable fat, 0.2%-1.3% of a stabilizer, 0.2%-1% of an emulsifier, 5% -18% of a plant protein powder, 3%-10% of a modified starch and 45%-65% of water. The smearing cheese analogue completely uses non milk-derived ingredients as raw materials, most of which are composed of plant ingredients, does not contain cholesterol, lactose or milk fat, can satisfy consumers requiring no cholesterol or saturated fat and consumers having lactose intolerance, and is a quite healthy food. The smearing cheese analogue with light flavor is very suitable for the taste of Chinese consumers, uses the raw materials with wide sources, and has a strong price advantage. The preparation method is simple, uses easily available factory equipment, and can be applied to scale and industrial production.

(19)中华人民共和国国家知识产权局

(12)发明专利申请

(10)申请公布号 CN 102835460 A
(43)申请公布日 2012.12.26

(21)申请号 201110168270.X

(22)申请日 2011.06.21

(71)申请人 光明乳业股份有限公司
地址 201103 上海市吴中路578号

(72)发明人 高红艳 刘振民 莫蓓红 肖杨
陈帅 石春权 郑远荣 孙克杰
郭本恒

(74)专利代理机构 上海智信专利代理有限公司
31002
代理人 薛琦 朱水平

(51)Int.Cl.
A23C 20/02(2006.01)

权利要求书 2 页 说明书 12 页

(54)发明名称

一种涂抹干酪模拟物及其制备方法

(57)摘要

本发明公开了一种涂抹干酪模拟物及其制备方法。包括以下重量百分比的原料：植物脂肪15%～28%，稳定剂0.2%～1.3%，乳化剂0.2%～1%，植物蛋白粉5%～18%，变性淀粉3%～10%和水45%～65%。本涂抹干酪模拟物完全采用非乳来源的配料为原料，大部分原料由植物性配料组成，不含胆固醇、乳糖以及乳脂肪，可以满足对胆固醇、饱和脂肪有要求的消费者，以及对乳糖不耐的消费者，是一款非常健康的食品。风味较清淡，非常适合中国消费者的口味。原料来源十分丰富，有很强的价格优势。制备方法工艺简单、工厂设备容易满足，能够实现规模化、产业化生产。

CN 102835460 A

1. 一种涂抹干酪模拟物，其特征在于，包括以下重量百分比的原料：植物脂肪 15%～28%，稳定剂 0.2%～1.3%，乳化剂 0.2%～1%，植物蛋白粉 5%～18%，变性淀粉 3%～10%和水 45%～65%；

所述的植物脂肪为氢化植物油、植物油和植物油分提物中的一种或多种；

所述的稳定剂为卡拉胶、明胶、刺槐豆胶、瓜尔豆胶、黄原胶、海藻酸钠、阿拉伯胶和结冷胶中的一种或多种；

所述的乳化剂为单、双、三甘油脂肪酸酯、山梨醇酯、聚氧乙烯山梨醇酐酯、磷脂、聚山梨醇酯和蔗糖酯中的一种或多种；

所述的植物蛋白粉是大豆蛋白粉、花生蛋白粉、芝麻蛋白粉、核桃蛋白粉和酶解植物蛋白粉中的一种或多种；

所述的变性淀粉为麦芽糊精、预糊化玉米变性淀粉和小麦变性淀粉中的一种或多种。

2. 如权利要求 1 所述的涂抹干酪模拟物，其特征在于，

所述的植物脂肪为氢化大豆油、玉米油二者的混合物，二者的质量比例为 2.5 ∶ 1；

所述的稳定剂为卡拉胶、明胶和黄原胶的混合物，所述的卡拉胶、明胶和黄原胶的复配比例为质量比 2 ∶ 1 ∶ 1；

所述的乳化剂为单、双、三甘油脂肪酸酯、磷脂和聚山梨醇酯的混合物，所述的单、双、三甘油脂肪酸酯、磷脂和聚山梨醇酯的复配比例为质量比 1 ∶ 1 ∶ 1；

所述的酶解植物蛋白粉为酶解大豆蛋白粉和酶解花生蛋白粉；

所述的变性淀粉为麦芽糊精和预糊化玉米变性淀粉。

3. 如权利要求 1 或 2 所述的涂抹干酪模拟物，其特征在于，所述的涂抹干酪模拟物还包括以下重量百分比的原料：5%～20%豆浆。

4. 如权利要求 1～3 任一项所述的涂抹干酪模拟物，其特征在于，所述的涂抹干酪模拟物还进一步包括以下原料：食盐 0.4%～1.0%和 / 或甜味剂 0%～8%。

5. 如权利要求 4 任一项所述的涂抹干酪模拟物，其特征在于，所述的甜味剂为白砂糖、阿斯巴甜、安赛蜜和三氯蔗糖中的一种或几种。

6. 如权利要求 1～5 任一项所述的涂抹干酪模拟物，其特征在于，所述的涂抹干酪模拟物，还进一步包括以下本领域常规干酪的添加剂，为风味呈现物质、营养强化剂、色素、果蔬汁、果蔬粉、果粒果酱、防腐剂、抗氧化剂、酸度调节剂和膳食纤维中的一种或多种。

7. 如权利要求 1～6 任一项所述的涂抹干酪模拟物，其特征在于，所述的涂抹干酪模拟物的指标为：32.9%～52.3%的固形物、15.7%～28.4%的脂肪、3.8%～14.7%的蛋白质，百分比各成分占再制干酪总量的质量百分比；所述的涂抹干酪模拟物的 pH 为 4.5～6.0。

8. 一种如权利要求 1～7 任一项所述的涂抹干酪模拟物的制备方法，其特征在于，包括以下步骤：

①将植物脂肪加热熔化，无脂肪结晶存在。

②将稳定剂和乳化剂、溶解甜味剂的水溶液依次加入到步骤①所得的植物脂肪中，形成乳化体系。

③乳化体系中缓慢加入植物蛋白粉以及变性淀粉，形成所需的质构。

④加入豆浆、食盐和各种常规添加剂，调节风味和 pH 值，后进行杀菌。

⑤均质、灌装、冷却。

9. 如权利要求 8 所述的制备方法，其特征在于，步骤②为在加热剪切搅拌条件下，充分混合乳化，所述的剪切搅拌条件是 900rpm ～ 1200rpm，70℃～ 90℃，乳化时间为 5min ～ 30min ；步骤③为 1200rpm ～ 1800rpm，70℃～ 90℃，15min ～ 40min ；所述的植物蛋白粉的加入速度为 2g ～ 10g/min。

10. 如权利要求 8 所述的制备方法，其特征在于，步骤⑤所述的均质的压力为 50bar ～ 200bar ；所述的灌装为不低于 70℃的条件下灌装，之后冷却至 2℃～ 8℃入库。

一种涂抹干酪模拟物及其制备方法

技术领域

[0001] 本发明属于乳制品领域，特别涉及一种涂抹干酪模拟物及其制备方法。

背景技术

[0002] 干酪又称奶酪，是一种在牛乳中加入适量乳酸菌发酵剂和凝乳酶制剂使乳中的蛋白质（主要是酪蛋白）凝固，变成不溶性酪蛋白钙，排出乳清、并经一定时间的成熟或不经成熟而制成的食品。制备干酪过程中酪蛋白通常是主要的蛋白源，这是由其特殊的流变性质和融化特性决定的。

[0003] 涂抹干酪是一种由牛奶、稀奶油发酵、成熟或不经成熟的干酪，其质地均匀细腻、易于涂抹、可直接食用，或用于制作甜点和蛋糕，一般具有独特的口感和风味，非常受消费者喜爱。

[0004] 干酪模拟物通常被定义为一些非乳来源的脂肪、蛋白质、碳水化合物等配料相混合，经加工制得的类似于干酪的产品。目前，随着消费者对干酪能量、胆固醇、脂肪的担心，干酪模拟物开始受到越来越多的关注。此外，该种产品采用植物性来源的配料，满足了食品快餐业的成本的需要，具有很广泛的应用前景。

发明内容

[0005] 因此，本发明要解决的技术问题就是针对受消费者喜爱的涂抹干酪存在能量、胆固醇、饱和脂肪过高的缺陷，提供一种涂抹干酪模拟物及其制备方法。该涂抹干酪模拟物完全采用非乳来源的配料为原料，以植物原料为主，健康，清淡。

[0006] 本发明为解决上述技术问题采用的技术方案如下：

[0007] 一种涂抹干酪模拟物，包括以下重量百分比的原料：植物脂肪 15%～28%，稳定剂 0.2%～1.3%，乳化剂 0.2%～1%，植物蛋白粉 5%～18%，变性淀粉 3%～10%和水 45%～65%。

[0008] 较佳的，本发明所述的涂抹干酪模拟物，包括以下重量百分比的原料：植物脂肪 19%～24%，稳定剂 0.2%～1.3%，乳化剂 0.2%～1%，植物蛋白粉 8%～15%，变性淀粉 4%～8%和水 55%～65%。

[0009] 本发明中，所述的植物脂肪为氢化植物油、植物油和植物油分提物中的一种或多种的混合物。较佳的为氢化大豆油、氢化菜籽油、氢化葵花籽油、棕榈油及其分提物、棕榈仁油、大豆油、玉米油和棉籽油中的一种或多种的混合物。考虑到最终产品的涂抹特性，更佳的为氢化大豆油、玉米油二者的混合物，较佳的质量比例为 2.5 ： 1。

[0010] 本发明中，特别优选的稳定剂对涂抹干酪模拟物的质构、以及产品的稳定体系发挥重要作用。所述的稳定剂为卡拉胶、明胶、刺槐豆胶、瓜尔豆胶、黄原胶、海藻酸钠、阿拉伯胶和结冷胶中的一种或多种的混合物。较佳的为卡拉胶、明胶和黄原胶的混合物，所述的卡拉胶、明胶和黄原胶的复配比例较佳的为质量比 2 ： 1 ： 1。

[0011] 本发明中，特别优选的乳化剂对涂抹干酪模拟物水包油体系的均一乳化发挥重要

作用。所述的乳化剂为单、双、三甘油脂肪酸酯、山梨醇酯、聚氧乙烯山梨醇酐酯、磷脂、聚山梨醇酯和蔗糖酯中的一种或多种的混合物。较佳的为单、双、三甘油脂肪酸酯、磷脂和聚山梨醇酯的混合物，所述的单、双、三甘油脂肪酸酯、磷脂和聚山梨醇酯的复配比例较佳的为质量比 1 ： 1 ： 1。

[0012] 本发明中，所述的植物蛋白粉是植物来源的蛋白粉，是按照现有技术，以植物为原料，经提取、纯化、浓缩等工艺，得到的其中的蛋白部分的产品。其成分指标为：蛋白质 60％～ 100％，水不超过 12％，百分比为质量百分比。所述的植物蛋白粉较佳的为大豆蛋白粉、花生蛋白粉、芝麻蛋白粉和核桃蛋白粉中的一种或多种的混合物。所述的植物蛋白粉之所以选择上述品种是在于具有较高的蛋白营养价值，如大豆蛋白其蛋白质的氨基酸组成与牛奶蛋白相近，除蛋氨酸略低外，其余必需氨基酸含量均较丰富，是植物性的完全蛋白质，在营养价值上，可与动物蛋白等同。此外，植物蛋白的来源十分的丰富，价格亦较低。但是，植物蛋白的分子较大，且不具备牛乳蛋白的磷酸结构，对涂抹干酪模拟物的风味和质构有一定的影响。所以为得到更佳的产品，所述的植物蛋白粉更佳的是酶解植物蛋白粉。酶水解技术按照现有技术，处理后再作为配料应用到涂抹干酪模拟物中。经发明人进一步优化实验，酶解大豆蛋白粉和酶解花生蛋白粉能够提供良好的涂抹质构。

[0013] 本发明中，所述的变性淀粉的作用是酪蛋白替代物。所述的变性淀粉可以为本领域常规，较佳的为麦芽糊精、预糊化玉米变性淀粉和小麦变性淀粉中的一种或多种，经发明人优化实验，更佳的为麦芽糊精和预糊化玉米变性淀粉。

[0014] 本发明所述的涂抹干酪模拟物，较佳的包括以下原料：豆浆。豆浆的用量较佳的是占原料总质量的 5％～ 20％ (wt)。

[0015] 本发明中，所述的豆浆为大豆用水浸泡后磨碎、过滤、煮沸而成的浆状液体，营养非常丰富，且易于消化吸收。所述的豆浆优选成分指标：脂肪 0.3％～ 2.2％，蛋白质 0.6％～ 4.5％，百分比为质量百分比。

[0016] 本发明所述的涂抹干酪模拟物，更佳的还进一步包括以下重量百分比的原料：食盐 0.4％～ 1.0％和 / 或甜味剂 0％～ 8％。食盐、甜味剂起调味作用。本发明中，所述的甜味剂为本领域常规甜味剂，较佳的为白砂糖、阿斯巴甜、安赛蜜、三氯蔗糖中的一种或几种，更佳的为白砂糖。

[0017] 本发明所述的涂抹干酪模拟物，更佳的还可以根据产品风味和口感等需要，进一步包括以下本领域常规干酪的添加剂，较佳的为风味呈现物质、营养强化剂、色素、果蔬汁、果蔬粉、果粒果酱、防腐剂、抗氧化剂、酸度调节剂和膳食纤维中的一种或多种。上述各原料用量均可为本领域常规用量，较佳的为：风味呈现物质用量≤ 0.1％；营养强化剂用量≤ 1％；色素用量≤ 0.1％；果蔬汁用量≤ 20％；果蔬粉用量≤ 10％；果粒果酱用量≤ 25％；防腐剂用量≤ 0.1％；抗氧化剂用量≤ 0.1％；酸度调节剂用量≤ 1.0％；膳食纤维≤ 3％；上述用量范围不包括 0％；百分比为各成分占各原料总量的质量百分比。

[0018] 本发明第二方面提供一种上述涂抹干酪模拟物的制备方法，包括以下步骤：

[0019] ①将植物脂肪加热熔化，无脂肪结晶存在。

[0020] ②将稳定剂和乳化剂、溶解甜味剂的水溶液依次加入到步骤①所得的植物脂肪中，形成乳化体系。

[0021] ③乳化体系中缓慢加入植物蛋白粉以及变性淀粉，形成所需的质构。

[0022] ④加入其他辅料（即豆浆、食盐和各种常规添加剂），调节风味和 pH 值，后进行杀菌。

[0023] ⑤均质、灌装、冷却。

[0024] 本发明中，步骤①为植物脂肪加热熔化过程。其中，所述较佳的熔化温度为 70℃～90℃，熔化时间为 20 ～ 30min，熔化过程中并伴随搅拌，搅拌速度为 100rpm ～ 300rpm。

[0025] 本发明中，步骤②为在加热剪切搅拌条件下，充分混合乳化，从而形成乳化体系。其中，所述的剪切搅拌条件较佳的是在 900rpm ～ 1200rpm 条件下加热至 70℃～ 90℃。为保证更好的乳化，在稳定剂和乳化剂、溶解甜味剂的水依次加入到脂肪中前，需将稳定剂和乳化剂提前混合均匀，并对水预先加热，加热温度至 70℃～ 90℃。所述的乳化时间较佳的为 5min ～ 30min，更佳的为 10min ～ 20min。

[0026] 本发明中，步骤③为质构形成过程。其中，要求快速剪切搅拌，较佳的剪切速度为 1200rpm ～ 1800rpm，较佳的温度控制为 70℃～ 90℃，剪切时间 15min ～ 40min。所述的植物蛋白粉和变性淀粉缓慢加入至乳化体系中，以防止粉料结块对产品质地产生影响，较佳的加入速度为 2g ～ 10g/min，更佳的为 3g ～ 5g/min。

[0027] 本发明中，步骤④中所述的加入其他辅料的搅拌速度为 1200rpm ～ 1800rpm，搅拌时间为 3min ～ 5min。所述的杀菌方式较佳的为巴氏杀菌或超高温灭菌。其中，所述的巴氏杀菌的温度较佳的为 65℃～ 90℃，时间较佳的为 10min ～ 20min；所述的超高温灭菌的温度较佳的为 120℃～ 145℃，更佳的为 140℃；时间较佳的为 2s ～ 7s，更佳的为 5s。

[0028] 本发明中，步骤⑤中在灌装之前按照本领域常规方式进行均质，较佳的均质压力为 50bar ～ 200bar。所述的灌装冷却较佳的为不低于 70℃的条件下灌装，之后冷却至 2℃～8℃入库即可。

[0029] 较佳地，本发明的涂抹干酪模拟物的指标为：32.9％～ 52.3％的固形物、15.7％～ 28.4％的脂肪、3.8％～ 14.7％的蛋白质，百分比各成分占再制干酪总量的质量百分比。

[0030] 较佳的，本发明的涂抹干酪模拟物的 pH 为 4.5 ～ 6.0。

[0031] 本发明所用原辅料均市售可得。

[0032] 本发明的积极进步效果在于：本发明提供了一种涂抹于酪模拟物及其制备方法。最终产品在完全非乳体系的情况下，既具有细腻、均匀的涂抹质构，又拥有良好的风味和口感。本涂抹干酪模拟物完全采用非乳来源的配料为原料，打消了消费者对动物来源配料脂肪、胆固醇以及能量的顾虑。大部分原料由植物性配料组成，不含胆固醇、乳糖以及乳脂肪，可以满足对胆固醇、饱和脂肪有要求的消费者，以及对乳糖不耐的消费者，具有健康的功能特性，是一款非常健康的食品。本涂抹干酪模拟物风味较清淡，非常适合中国消费者的口味。该模拟物以植物为原料，来源十分丰富，有很强的价格优势。同时，涂抹干酪模拟物的制备方法工艺简单、工厂设备容易满足，能够实现规模化、产业化生产。

具体实施方式

[0033] 下面用实施例来进一步说明本发明，但本发明并不受其限制。下列实施例中未注明具体条件的实验方法，通常按照常规条件，或按照制造厂商所建议的条件。

[0034] 下述实施例中，所用原料来源为：

[0035] 大豆油、玉米油、棉籽油、甜味剂、植物蛋白粉、豆浆：市售。氢化大豆油、氢化菜籽油、氢化葵花籽油、棕榈仁油、棕榈油分提物：上海嘉里粮油工业有限公司。

[0036] 酶解大豆蛋白粉：哈高科大豆食品公司。

[0037] 稳定剂、乳化剂：丹尼斯克中国有限公司、斯比凯克中国有限公司。

[0038] 风味物质：奇华顿香精香料有限公司。

[0039] 变性淀粉：国民淀粉。

[0040] 防腐剂、酸度调节剂、矿物盐：上海励成食品工业有限公司。

[0041] 维生素：帝斯曼中国有限公司。

[0042] 果蔬粉：上海诚一食品原料有限公司。

[0043] 果蔬汁、果粒：上海统园食品技术有限公司。

[0044] 膳食纤维：捷成中国贸易有限公司。

[0045] 实施例 1

[0046] 原料配方：

[0047]

原料种类	含量 wt%
氢化大豆油	20
玉米油	8
大豆蛋白粉	3.5
芝麻蛋白粉	2
麦芽糊精	3
葡萄糖内酯	1
白砂糖	8
食盐	0.4
卡拉胶	0.3
刺槐豆胶	0.2
单、双、三甘油脂肪酸酯	0.2
山梨酸钾	0.09
水	53.31

[0048]

[0049] 首先将氢化大豆油、玉米油升温至 70℃，此温度下保持 20min，并同时伴随搅拌，搅拌速度为 100rpm。后将卡拉胶、刺槐豆胶、单、双、三甘油脂肪酸酯均匀混合，水预热至 70℃加入白砂糖溶解，再与上述脂肪混合，剪切速度为 1200rpm，持续时间为 10min。后将大豆蛋白粉、芝麻蛋白粉、麦芽糊精以 5g/min 的速度加入到乳化体系中，控制温度 70℃，剪切速度为 1800rpm，剪切 15min，然后葡萄糖内酯、食盐、山梨酸钾全部加入，搅拌速度为 1400rpm，5min 后，进行杀菌和均质。杀菌条件为 90℃保温 15min，均质压力为 100bar，最后进行灌装、冷却。

[0050] 本实施例中制得的涂抹干酪模拟物：固形物 45.2%；脂肪 28.4%；蛋白质 3.8%；pH 为 4.8，百分比为各成分占再制干酪质量总量的百分比。

[0051] 实施例 2

[0052] 原料配方：

[0053]

原料种类	含量 wt%
氢化葵花籽油	20
豆浆	7
酶解大豆分离蛋白	18
预糊化玉米变性淀粉	5
海藻酸钠	0.1
黄原胶	0.1
单、双、三甘油脂肪酸酯	0.2
磷脂	0.2
聚山梨醇酯	0.2
食盐	1.8
柠檬酸	0.12
水	47.28

[0054]

[0055] 首先将氢化葵花籽油升温至 90℃，此温度下保持 25min，并同时伴随搅拌，搅拌速度为 200rpm。后将海藻酸钠、黄原胶、单、双、三甘油脂肪酸酯、磷脂、聚山梨醇酯均匀混合，水预热至 90℃，与上述脂肪混合，剪切速度为 1000rpm，持续时间为 20min。再将大豆分离蛋白粉、预糊化玉米变性淀粉以 10g/min 的速度加入到乳化体系中，控制温度 90℃，剪切速度为 1600rpm，剪切 40min，然后豆浆、食盐、柠檬酸全部加入，搅拌速度为 1800rpm，3min 后，进

行杀菌和均质。杀菌条件为 90℃保温 10min，均质压力为 120bar，后进行灌装、冷却。

[0056] 本实施例中制得的涂抹干酪模拟物：固形物 46.9%；脂肪 20.2%；蛋白质 14.7%；pH 为 5.6，百分比为各成分占再制干酪质量总量的百分比。

[0057] 实施例 3

[0058] 原料配方：

[0059]

原料种类	含量 wt%
棕榈油硬脂分提物	20
大豆蛋白粉	11
麦芽糊精	5
豆浆	5
白砂糖	5
食盐	1.8
磷酸	1.0
单、双、三甘油脂肪酸酯	0.5
山梨醇酯	0.5
卡拉胶	0.2
明胶	0.2
结冷胶	0.1
水	49.7

[0060]

[0061] 首先将棕榈油硬脂分提物升温至 80℃，此温度下保持 30min，并同时伴随搅拌，搅拌速度为 150rpm。后将单、双、三甘油脂肪酸酯、山梨醇酯、卡拉胶、明胶、结冷胶均匀混合，水预热至 80℃加入白砂糖溶解，与上述脂肪混合，剪切速度为 900rpm，持续时间为 30min。再将大豆蛋白粉、麦芽糊精以 4g/min 的速度加入到乳化体系中，控制温度 80℃，剪切速度为 1200rpm，剪切 30min，然后豆浆、食盐、磷酸全部加入，搅拌速度为 1600rpm，4min 后，进行杀菌和均质，杀菌条件为 65℃保温 20min，均质压力为 150bar，后进行灌装、冷却。

[0062] 本实施例中制得的涂抹干酪模拟物：固形物 43.9%；脂肪 20.8%；蛋白质 8.7%；pH 为 4.5，百分比为各成分占再制干酪质量总量的百分比。

[0063] 实施例 4

[0064] 原料配方：

[0065]

原料种类	含量 wt%
氢化菜籽油	20
酶解大豆蛋白粉	5
酶解花生蛋白粉	5
阿斯巴甜	480ppm
小麦变性淀粉	3
食盐	0.7
磷脂	0.3
蒸馏单甘酯	0.2
卡拉胶	0.2
瓜尔豆胶	0.2
阿拉伯胶	0.1
水	65.3

[0066]

[0067] 首先将氢化菜籽油升温至 80℃，此温度下保持 25min，并同时伴随搅拌，搅拌速度为 300rpm。后将蒸馏单甘酯、磷脂、卡拉胶、瓜尔豆胶、阿拉伯胶均匀混合，水预热至 80℃加入阿斯巴甜溶解，然后与上述脂肪混合，剪切速度为 1200rpm，持续时间为 5min。再将酶解大豆蛋白粉、酶解花生蛋白粉、小麦变性淀粉以 4g/min 的速度加入到乳化体系中，控制温度 80℃，剪切速度为 1800rpm，剪切 25min，然后豆浆、食盐全部加入，搅拌速度为 1400rpm，4min 后，进行杀菌和均质。杀菌条件为 65℃保温 20min，均质压力为 200bar，杀后进行灌装、冷却。

[0068] 本实施例中制得的涂抹干酪模拟物：固形物 34.5%；脂肪 20.7%；蛋白质 7.2%；pH 为 6.0，百分比为各成分占再制干酪质量总量的百分比。

[0069] 实施例 5

[0070] 原料配方：

[0071]

原料种类	含量 wt%
棕榈仁油	10
棉籽油	8
大豆蛋白粉	4
核桃蛋白粉	2
白砂糖	4
小麦变性淀粉	3
柠檬酸	0.8
食盐	0.7
磷脂	0.3
聚氧乙烯山梨醇酐酯	0.4
卡拉胶	0.6
刺槐豆胶	0.3
黄原胶	0.4
水	65.5

[0072]

[0073] 首先将棕榈仁油、棉籽油升温至 80℃，此温度下保持 18min，并同时伴随搅拌，搅拌速度为 150rpm。后将磷脂、聚氧乙烯山梨醇酐酯、卡拉胶、刺槐豆胶、黄原胶均匀混合，水预热至 80℃加入阿斯巴甜溶解，与上述脂肪混合，剪切速度为 1200rpm，持续时间为 15min。再将大豆蛋白粉、核桃蛋白粉、小麦变性淀粉以 2g/min 的速度加入到乳化体系中，控制温度 80℃，剪切速度为 1200rpm，剪切 20min。然后柠檬酸、食盐全部加入，搅拌速度为 1200rpm，4min 后，进行杀菌和均质。杀菌条件为 140℃保温 2s，均质压力为 50bar，后进行灌装、冷却。

[0074] 本实施例中制得的涂抹干酪模拟物：固形物 33.1%；脂肪 18.6%；蛋白质 4.5%；pH 为 5.2，百分比为各成分占再制干酪质量总量的百分比。

[0075] 实施例 6

[0076] 原料配方：

[0077]

原料种类	含量 wt%
氢化大豆油	15
豆浆	20
酶解大豆蛋白粉	9
安赛蜜	260ppm
预糊化玉米变性淀粉	6
食盐	0.7
磷脂	0.3
蔗糖酯	0.3
卡拉胶	0.2
明胶	0.1
黄原胶	0.1
水	48.3

[0078]

[0079] 首先将氢化大豆油升温至 80℃，此温度下保持 18min，并同时伴随搅拌，搅拌速度为 150rpm。后将蔗糖酯、磷脂、卡拉胶、明胶、黄原胶均匀混合，水预热至 80℃加入安赛蜜溶解，然后与上述脂肪混合，剪切速度为 1200rpm，持续时间为 15min。再将酶解大豆蛋白粉、预糊化玉米变性淀粉以 3g/min 的速度加入到乳化体系中，控制温度 80℃，剪切速度为 1800rpm，剪切 35min。最后将食盐全部加入，搅拌速度为 1600rpm，4min 后，进行杀菌和均质。杀菌条件为 140℃保温 7s，均质压力为 150bar，后进行灌装、冷却。

[0080] 本实施例中制得的涂抹干酪模拟物：固形物 32.9%；脂肪 15.7%；蛋白质 8.0%；pH 为 5.7，百分比为各成分占再制干酪质量总量的百分比。

[0081] 实施例 7

[0082] 原料配方：

[0083]

原料种类	含量 wt%
氢化大豆油	12
大豆油	4

大豆蛋白粉	5
烟熏火腿	4.5
麦芽糊精	10
三氯蔗糖	80ppm
大蒜风味料	0.5
食盐	1.0
磷脂	0.3
单、双、三甘油脂肪酸酯	0.4
刺槐豆胶	0.2
瓜尔豆胶	0.1
卡拉胶	0.1
山梨酸	0.09
水	61.81

[0084]

[0085] 首先将氢化大豆油、大豆油升温至 80℃，此温度下保持 18min，并同时伴随搅拌，搅拌速度为 150rpm。后将磷脂、单、双、三甘油脂肪酸酯、刺槐豆胶、瓜尔豆胶、卡拉胶均匀混合，水预热至 80℃加入三氯蔗糖溶解，然后与上述脂肪混合，剪切速度为 1200rpm，持续时间为 15min。再将大豆蛋白粉、麦芽糊精以 4g/min 的速度加入到乳化体系中，控制温度 80℃，剪切速度为 1800rpm，剪切 25min。再将食盐、山梨酸加入，搅拌速度为 1500rpm，4min 后，进行杀菌和均质。杀菌条件为 140℃保温 5s，均质压力为 150bar，最后拌入烟熏火腿和大蒜风味料、灌装、冷却。

[0086] 本实施例中制得的涂抹干酪模拟物：固形物 37.9%；脂肪 16.8%；蛋白质 4.5%；pH 为 5.5，百分比为各成分占再制干酪质量总量的百分比。

[0087] 实施例 8

[0088] 原料配方：

[0089]

原料种类	含量 wt%
氢化菜籽油	10

玉米油	5
酶解大豆蛋白粉	18
预糊化玉米变性淀粉	5.5
麦芽糊精	4.5
白砂糖	8
食盐	0.7
单、双、三甘油脂肪酸酯	0.4
磷脂	0.3
蔗糖酯	0.3
黄原胶	0.5
明胶	0.2
卡拉胶	0.2
山梨酸	0.09
水	46.31

[0090]

[0091] 首先将氢化菜籽油、玉米油升温至70℃，此温度下保持20min，并同时伴随搅拌，搅拌速度为200rpm。后将单、双、三甘油脂肪酸酯、磷脂、蔗糖酯、黄原胶、明胶、卡拉胶均匀混合，水预热至75℃加入白砂糖溶解，再与上述脂肪混合，剪切速度为1000rpm，持续时间为10min。再将酶解大豆蛋白粉、预糊化玉米变性淀粉、麦芽糊精以3g/min的速度加入到乳化体系中，控制温度70℃，剪切速度为1800rpm，剪切40min。再将食盐、山梨酸加入，搅拌速度为1600rpm，3min后，进行杀菌和均质。杀菌条件为80℃保温15min，均质压力为100bar，后进行灌装、冷却。

[0092] 本实施例中制得的涂抹干酪模拟物：固形物52.3%；脂肪16.1%；蛋白质11.7%；pH为6.0，百分比为各成分占再制干酪质量总量的百分比。

[0093] 效果实施例1

[0094] 对本发明的涂抹干酪模拟物（实施例为例）进行质构效果检验，以卡夫稀奶油奶酪、总统牌金文奶油奶酪、casarelli mascarpone和光明健康成长奶酪作对照。

[0095] 质构测试方法：

[0096] 质构测试通过模拟人口腔的咀嚼运动，对样品进行压缩，通过界面输出质地测试曲线，分析硬度、涂抹性、粘着性等质构特性。所有样品取样后至测试前均统一放置于0℃～

4℃冰箱中以防止温度对产品质地产生影响。物性测试仪（TA-LH 型）参数设置：测量前探头下降速度 1.0mm/s；测试速度 1.0mm/s；测量后探头回程速度 2.0mm/s；测试距离 10mm；感应力 10g；探头类型 p/25。

[0097] TPA 曲线参数：

[0098] ①硬度：TPA 曲线第一压缩周期中的最大力值 N 表示，表示干酪的软硬程度。

[0099] ②涂抹性：探头下行过程中受力曲线与时间轴所形成的峰面积表示，面积值越小越易涂抹。

[0100] ③粘着性：探头上行过程中受力曲线与时间轴所形成的峰面积表示，面积值越大，粘度越大，咀嚼时口腔的舒适感越差。

[0101] 测试结果记录于表 1。

[0102] 表 1. 不同产品的质构测试结果

[0103]

测试样品	硬度（g）	涂抹性（g·s）	粘着性（g·s）
卡夫稀奶油奶酪	38	445	309
总统牌金文奶油奶酪	52	589	412
casarelli mascarpone	27	356	288
光明健康成长奶酪	41	496	372
实施例 1	36	428	291
实施例 4	40	461	363
实施例 5	28	342	265

[0104] 由上表 1 的测试数据可知：本发明实施例制得的涂抹干酪模拟物样品，质构特性与市售的原制涂抹干酪、再制涂抹干酪数据相当，尤其是实施例 4，展示优良的涂抹特性，故本发明的涂抹干酪模拟物完全符合预期要求。

J-PlatPat
Japan Platform for Patent Information
Help desk (9:00-21:00)
(+81)3-6666-8801
helpdesk@j-platpat.inpit.go.jp
Japanese Top page Help list Site map JPO IN
National Center for Industrial Property Information and Tra
Patent & Utility Model Design Trademark Trial & Appeal
Top page Patent& Utility Model Patent& Utility Model Number Search

Patent & Utility Model Number Search

Back Help
Search List De

You can retrieve a variety of patent and utility model gazettes by their numbers.

Selected Gazette

Previous Document 1/1 Next Documer

JP,53-115846,A

PAI Detail Image
CLAIMS DETAILED DESCRIPTION
DESCRIPTION OF DRAWINGS

*** NOTICES ***

JPO and INPIT are not responsible for any damages caused by the use of this translation.

1.This document has been translated by computer. So the translation may not reflect the original precisely.
2.**** shows the word which can not be translated.
3.In the drawings, any words are not translated.

DETAILED DESCRIPTION

the Description 1. title-of-the-invention protein prize artificial color agent 2, the range aromatic-amino-acid derivative of % ******, or a different ****-like amino acid screen -- the protein diet article artificial color agent which contains 2 or more type of kind **** of a conductor.
3. Detailed opinion Akemoto invention of invention relates to the new artificial color agent of a protein diet article.
the present processed meat, milling products, fish meat, and .. MU, a sausage, and the development of the artificial color agent of a protein diet article that has five pigments to salted salmon roe, cod roe, roe, etc. how much are demanded strongly.
The inventor is an aromatic-amino-acid derivative which finds out that different ****-like amino # ****** can use aromatic amino 1MI ********* as a protein prize artificial color agent, and completes this @ **, and it uses for the 9 present invention. a different ****-like amino acid derivative is constituted -- if amino acid+7M TO carries out, phenylalanine, tyrosine, chill KISHIN, Tori Bouto Hwang, and histidine are raised.
As for the aromatic-amino-acid derivative and different ****-like amino acid derivative which are used for the present invention, at least one hydrogen atom of an amino group is not replaced at all.
The ** film of the carboxyl group is carried out in a certain form.
As the protected type **, a peptide bond with alkyl ester, such as methyl and ethyl, and other amino acid is **********.
t* There is no restriction in the structure of other above-mentioned amino acid in the case of adopting peptide, for example, the carboxyl group may be a free state, and it is not necessary to have an amino group (- MH2), and when it has an amino group, hydrogen atoms, such as acylation, may be carried out.
Protein diet article 100 made into the L object using the amino acid derivative used for the present invention as an artificial color agent? In addition, it is at the five to Si 50 millimol i1, the directions for use face a metaphor preserving in salt -- a protein prize -- * -- ** Si or **** 1 is also good in a Minot ** conductor -- it may carry out, it may be made a drop liquid condition, and may inject into the inside of foodstuffs -- ** -- ** -- the protein diet article may be dipped into the amine acid derivative solution.
The color tone of the target protein diet article was further prepared, and it found out that it was good for eye nine prevent tenebrescence further sufficiently to use together anti-oxidants, such as L-ascorbic acid, erythorbic acid, those salts, dibutylhydroxytoluene, and butylhydroxyanisole.
When using an anti-oxidant together, the amount used is 0.1 to 1% machine anti-****** to the object protein diet article.
In an idea that it can be made to be able to color for foodstuffs by FUERIHEMOKU cx-MU (farrihemocnrome) and the tenebrescence by air oxidation can be avoided during light and storage, FERIHEMO chromium generation ability to MACHIN (hematin), a metmyoglobin (metMb), and urea denaturation myoglobin was ****(ed) in the test tube to that of each ** amino 1111 conductor.
A FERIHEMO chromium generation ability test result with completion-of-the-work denaturation myoglobin of an amino acid derivative is shown in Table 1 as the example of -, and it is 9.
In the PH vote 7.0, it calculated to what time the absorption value increased the wavelength of the alpha band of a visible absorption spectrum as compared with contrast (when not using a sample), and the R value showed it.
It turned out that no amino acid derivatives other than an one or more-table examination end, aromatic-amino-acid ******, or a different ****-like amino it[derivative generate red 7 ERIHEMO chromium.
Generating red 7 ERIHEMO chromium is confirmed and an aromatic-amino-acid derivation book and different **-like amino fR ****** are 9.
However, it was also confirmed that the amino acid from which the carbo CHIFURU group is not protected does not generate red FERIHEMO chromium.

the pH condition made to react -- 6.5 or more -- ** Si -- it was preferable.
If processed meat, such as a ham and a sausage, and ** t are used together and used [wheat bleaching agents, such as ****** potash,] with the above-mentioned anti-oxidant before heat-treatment, when using an amino acid derivative for what the manufacturing stage of marine paste products, such as **, takes heat-treatment, and heightening the coloring effect, they are preferable.
The amount of the improving agent used is the degree of 0.01 to 0.2%@.
This **** is described in detail according to an working example below.
The color test was done about working-example L-histidine methyl ester, L-phenylalanine ethyl ester, tyrosine ethyl ester, and HISUCHI rel histidine.
**** storage was carried out -- it preserves in salt, while an egg will be thawed at a room temperature on the occasion of pure **, the egg grain IoOff will be immersed in underwater [containing salt 12? and a sample / 15-m] and hand return will be carried out at a room temperature for about 3 to 4 hours, if it obtains "become empty", and there are not rinsing after a friend and a water break coconut -- it came out, put into small Chalais, and stored in the refrigerator before and behind 5C.
The inside which does not contact the surface portion which touches the air of an egg grain directly was independently filled in the standard cell of path 30**, using Nippon Denshoku colorimetry ****** ID-101DW, the R value was measured and the color tone of a red system of coloring of cod roe was evaluated.
A result is shown in Table 2 and it is a round head.

Previous Document 1/1 Next Documer

To return to the top of this p

Notice on Usage Privacy Policy Questionnaire

[Translation done.]

⑲日本国特許庁　　⑪特許出願公開

公開特許公報　　昭53—115846

⑤Int. Cl.²　識別記号　⑤日本分類　庁内整理番号　㊸公開　昭和53年(1978)10月9日
A 23 L 1/27　　34 F 04　　7110—49
A 23 L 1/31

発明の数　1
審査請求　未請求

（全 3 頁）

⑭蛋白食品発色剤

㉑特　　願　昭52—29304
㉒出　　願　昭52(1977)3月18日
⑫発 明 者　野中順三九
横浜市港北区仲手原2—43—14
同　小泉千秋
藤沢市藤が岡3丁目24番地
⑦出 願 人　野中順三九
横浜市港北区仲手原2—43—14
同　小泉千秋
藤沢市藤が岡3丁目24番地
⑭代 理 人　弁理士　後藤道生

明　細　書

1. 発明の名称

蛋白食品発色剤

2. 特許請求の範囲

芳香族アミノ酸誘導体又は異節環状アミノ酸誘導体の一種又は二種以上を含有する蛋白食品発色剤。

3. 発明の詳細な説明

本発明は蛋白食品の新規発色剤に関する。

現在肉製品、鯨肉製品、魚肉、ハム、ソーセージ、いくら、すじこ、たらこ、魚卵等へム色素を有する蛋白食品の発色剤の開発が強く要望されている。

本発明者等は芳香族アミノ酸誘導体又は異節環状アミノ酸誘導体が蛋白食品発色剤として使用できることを見出し本発明を完成した。

本発明に使用する芳香族アミノ酸誘導体、異節環状アミノ酸誘導体を構成するアミノ酸の例としてはフエニルアラニン、チロシン、チロキシン、トリプトファン、ヒスチジンがあげられる。

本発明に使用する芳香族アミノ酸誘導体、異節環状アミノ酸誘導体はアミノ基の少くとも一個の水素原子は何ら置換されていないものである。またそのカルボキシル基は何らかの形で保護されているものである。その保護形体としては例えばメチル、エチル等のアルキルエステル、他のアミノ酸とのペプチド結合があげられる。ペプチドを採用する場合の上記の他のアミノ酸の構造には制限がなく、例えばそのカルボキシル基は遊離状態であつてもよく、またアミノ基（$-NH_2$）を有していなくともよく、アミノ基を有している場合アシル化等水素原子が置換されていてもよい。

本発明に使用するアミノ酸誘導体を発色剤として使用するには目的とする蛋白食品100g当り5～50ミリモル程度で、その使用方法は例えば塩漬に際し蛋白食品にアミノ酸誘導体をふりかけてもよいし、溶液状態にして食品内部に注入してもよく、またそのアミノ

Case No.: IPR2023-00208
U.S. Patent No. 10,039,306

酵導体溶液中に被蛋白食品を浸してもよい。

目的とする蛋白食品の色調をさらに整え、褪色をさらに十分に防止するために、L－アスコルビン酸、エリソルビン酸及びそれらの塩、ジブチルヒドロキシトルエン、ブチルヒドロキシアニソール等の抗酸化性物質を併用するとよいことを見出した。抗酸化性物質を併用する場合、その使用量は目的蛋白食品に対し0.1～1％程度である。

食品をフエリヘモクローム（ferrihemochrome）によつて発色させることができれば、貯蔵中に空気酸化による褪色を避けることができるとの考えで、各種アミノ酸誘導体のヘマチン（hematin）、メトミオグロビン（metMb）及び尿素変性ミオグロビンに対するフエリヘモクローム生成能を試験管内で比較した。その一例としてアミノ酸誘導体の尿素変性ミオグロビンとのフエリヘモクローム生成能試験結果を表1に示した。pH=7.0において、可視吸収スペクトルのアルファーバンドの波長を対照（試料を用いない場合）と比較して吸収値が何倍に増大したかを計算しR値で示した。

表　1

試　料	アルファーバンド	
	nm	R
ヒスチジルヒスチジン	560	1.74
カルノシン	570	1.35
ヒスチジンメチルエステル	562	1.69
フエニルアラニンエチルエステル	560	1.65
チロシンエチルエステル	560	1.72
ヒスチジン	565	1.10

以上の試験結果、芳香族アミノ酸誘導体又は複節環状アミノ酸誘導体以外のアミノ酸誘導体は赤色のフエリヘモクロームを生成しないことがわかつた。また芳香族アミノ酸誘導体、複節環状アミノ酸誘導体は赤色のフエリヘモクロームを生成することが確められた。しかしカルボキシル基が保護されていないアミノ酸は赤色のフエリヘモクロームを生成しないことも確められた。反応させたpH条件は6.5以上がより好ましかつた。

ハム、ソーセージ等の肉製品、かまぼこ等の水産練製品の製造段階で加熱処理を要するものにアミノ酸誘導体を使用する場合、加熱処理前に亜硝酸カリ等の小麦粉等改良剤を前述の抗酸化性物質とともに併用して使用すると発色効果を高める上で好ましい。その改良剤の使用量は0.01～0.2％程度である。

以下実施例により本発明を詳細に説明する。

実施例

L－ヒスチジンメチルエステル、L－フエニルアラニンエチルエステル、チロシンエチルエステル及びヒスチジルヒスチジンについて発色試験を行つた。

冷蔵貯蔵したすけとうたら卵を試験に供して室温で解凍し、その卵粒100gを食塩12gと試料を含む15mlの水中に浸漬し、室温で約3～4時間手返ししながら塩漬した後、水洗、水切りしないで小型シヤレーに入れ5℃前後の冷蔵庫に貯蔵した。

卵粒の空気に直接触れる表面部分と接触しない内部を別々に後30mmの標準セルに詰め日本電色製測色色差計ND-101D型を用い、a値を測定し、たらこの発色の赤色系の色調を評価した。結果を表2に示した。

Motif Exhibit 1148, Page 2297 of 3341

Case No.: IPR2023-00208
U.S. Patent No. 10,039,306

表 2

試料	貯蔵日数			
	2	6	10	14
1.8%ヒスチジンメチルエステル	6.7	5.5 (7.0)	5.9 (7.4)	5.2 (6.9)
1.8%ヒスチジンメチルエステル +0.3%アスコルビン酸	7.7	6.6 (7.5)	7.5 (8.4)	7.3 (8.4)
2.0%ヒスチジルヒスチジン	7.7	6.0 (8.0)	5.4 (7.6)	4.4 (6.9)
2.0%ヒスチジルヒスチジン +0.3%アスコルビン酸	8.5	7.0 (7.4)	8.3 (8.6)	7.0 (7.6)
1.7%フエニルアラニンエチルエステル	7.0	6.2 (8.2)	6.5 (8.0)	6.2 (7.3)
1.7%フエニルアラニンエチルエステル +0.3%アスコルビン酸	6.9	6.0 (7.8)	6.3 (8.4)	5.9 (8.1)
1.8%チロシンエチルエステル	6.5	5.6 (7.3)	6.0 (7.5)	5.6 (7.2)
1.8%チロシンエチルエステル +0.3%アスコルビン酸	6.4	5.5 (7.9)	5.8 (8.4)	5.1 (7.9)
0.9%ニコチン酸アミド +0.3%アスコルビン酸	7.0	5.2 (8.3)	5.2 (9.9)	4.3 (8.5)

( )内は練粒の内部部分について測定した値である。

この結果から、アスコルビン酸との併用が好ましいこと。対照試験のニコチン酸アミドと比較して表面部分の発色が安定していることがわかる。

特許出願人 野中順三九
小泉千秋

代理人 後藤達生

Motif Exhibit 1148, Page 2298 of 3341

Espacenet

Bibliographic data: JPH08140627 (A) — 1996-06-04

HEME IRON-CONTAINING FOOD AND ITS PREPARATION

Inventor(s):	INOUE KOICHI; YAMAGUCHI SHINYA ± (INOUE KOICHI, ; YAMAGUCHI SHINYA, ; INOE KOICHI)
Applicant(s):	HOUSE FOODS CORP ± (HOUSE FOODS CORP, ; HAUSU SHOKUHIN KK)
Classification:	**- international:** ***A23L1/304; A23L1/39;*** (IPC1-7): A23L1/304 **- cooperative:**
Application number:	JP19940292736 19941128 Global Dossier
Priority number (s):	JP19940292736 19941128
Also published as:	JP2883823 (B2)

Abstract of JPH08140627 (A)

PURPOSE: To obtain a heme iron containing food useful for preparation of curry, etc., without losing color tone and flavor essential in a food by mixing a heme iron, an emulsifier, paprika pigment and ginger, etc., and blending with fats and oils under heating. CONSTITUTION: This heme iron-containing food is obtained by mixing a heme iron such as a material derived from an enzymolysis of hemoglobin preferably in an amount of 1.0-5.0ppm with an emulsifier such as fatty acid ester of sugar, paprika pigment and ginger and/or garlic and blending fats and oils such as corn oil or starch such as wheat flour therewith under heating.

【発行国】

日本国特許庁（ＪＰ）

【公報種別】 (19)日本国特許庁（ＪＰ） (12) 公開特許公報（Ａ） (11)特許出願公開番号

特開平8－140627

(43)公開日 平成8年(1996)6月4日

公開特許公報（Ａ）

(51)Int.Cl.⁶	識別記号	庁内整理番号	ＦＩ	技術表示箇所
Ａ２３Ｌ 1/304				

【公開番号】

特開平８－１４０６２７

審査請求 未請求 請求項の数３ ＯＬ （全 ４ 頁）

(21)出願番号 特願平6－292736

【公開日】 (22)出願日 平成6年(1994)11月28日

平成８年（１９９６）６月４日

(71)出願人 000111487
ハウス食品株式会社
大阪府東大阪市御厨栄町１丁目５番７号

(72)発明者 井上 浩一
大阪府東大阪市御厨栄町１丁目５番７号
ハウス食品株式会社内

(72)発明者 山口 慎也
大阪府東大阪市御厨栄町１丁目５番７号
ハウス食品株式会社内

(74)代理人 弁理士 中村 稔 （外７名）

【発明の名称】

ヘム鉄含有食品及びその製造方法

(54)【発明の名称】 ヘム鉄含有食品及びその製造方法

【国際特許分類第６版】

A23L 1/30

【審査請求】

【請求項の数】

【出願形態】ＯＬ

【全頁数】４

(57)【要約】

【目的】 食品本来の色調と風味を損ねることのない、ヘム鉄を含有する食品を提供すること。

【構成】 ヘム鉄、乳化剤、パプリカ色素、ジンジャー及び／又はガーリックを含有するヘム鉄含有食品、及びヘム鉄、乳化剤、パプリカ色素、ジンジャー及び／又はガーリックを混合した後、油脂又は澱粉と加熱混合するヘム鉄含有食品の製造方法。

【出願番号】

特願平６－２９２７３６

【出願日】

平成６年（１９９４）１１月２８日

【特許請求の範囲】

【請求項1】　ヘム鉄、乳化剤、パプリカ色素、ジンジャー及び／又はガーリックを含有することを特徴とするヘム鉄含有食品。

【請求項2】　ヘム鉄、乳化剤、パプリカ色素、ジンジャー及び／又はガーリックを混合した後、油脂又は澱粉と加熱混合することを特徴とするヘム鉄含有食品の製造方法。

【請求項3】　ヘム鉄、乳化剤、ジンジャー及び／又はガーリックを混合した後、油脂又は澱粉と加熱混合し、次いでパプリカ色素を混合することを特徴とするヘム鉄含有食品の製造方法。

【発明の詳細な説明】

【0001】

【産業上の利用分野】本発明は、ヘム鉄を含有する食品、例えば、カレー、ミートソース、ビーフシチュー、マーボ豆腐などの食品、及び該食品の製造方法に関する。

【0002】

【従来の技術】従来、食品の鉄分を強化のためにヘム鉄を利用することは知られており、また、ヘム鉄に起因する生臭み・金属味等を防止する技術として種々の提案がなされている（特開昭63－294761号、特開平1－157359号、特開平4－30779号等）。しかしながら、ヘム鉄をカレーやミートソースなどに添加すると、これらが黒緑色の帯びた状態となり、食品本来の色調が損なわれるとの問題が生じるが、これまで、このようなヘム鉄に起因する食品の色調の改善はなされていない。

【0003】

【発明が解決しようとする課題】本発明は、食品本来の色調と風味を損ねることなく、ヘム鉄を含有する食品を提供することを目的とする。本発明は、又、このような食品の効率的な製造方法を提供することを目的とする。

【0004】

【課題を解決するための手段】本発明は、ヘム鉄に、乳化剤、パプリカ色素、ジンジャー及び／又はガーリックを併用すると、食品本来の色調と風味を良好に保持することができ、特に、ヘム鉄とパプリカ色素とを特定の条件下で混合すると一層食品本来の色調を良好に保持することができるとの知見に基づいてなされたのである。すなわち、本発明は、ヘム鉄、乳化剤、パプリカ色素、ジンジャー及び／又はガーリックを含有することを特徴とするヘム鉄含有食品を提供する。本発明は、又、ヘム鉄、乳化剤、パプリカ色素、ジンジャー及び／又はガーリックを混合した後、油脂又は澱粉と加熱混合することを特徴とするヘム鉄含有食品の製造方法を提供する。本発明は、又、ヘム鉄、乳化剤、ジンジャー及び／又はガーリックを混合した後、油脂又は澱粉と加熱混合し、次いでパプリカ色素を混合することを特徴とするヘム鉄含有食品の製造方法を提供する。

【0005】本発明で用いるヘム鉄はヘモグロビンの酵素分解物であり、鉄分を例えば0．05～5重量％（以下、％と略称する）を含むものである。その製造方法としては、例えば動物血液の赤血球を溶血、変性し、例えばアルカラーゼのような蛋白質分解酵素によりヘモグロビンを酵素分解し、ヘム鉄を含む画分を取り出して乾燥することにより得られる。ヘム鉄を含む画分を取り出すには例えば10000ダルトンの限外沪過により、ヘム鉄を含まない画分を沪過する方法と酵素分解終了後pHを蛋白質の等電点近くまで下げ、沈降したヘムを含む画分を遠心分離機により補集する方法等があげられる。

【0006】また、本発明ではヘム鉄としては、キトサンで処理したものを使用することが好ましい。その製造方法としては、ヘモグロビン分解物として得られるヘム鉄の水懸濁液に、キトサン水溶液を添加し、撹き混ぜながらpHを調整して、懸濁状態で得られるヘム鉄を、フィルタープレス等で分離する方法等があげられる。本発明ではヘム鉄として任意の形態のものを使用することができる。例えば、粉末、顆粒、液体等である。本発明において、食品に添加するヘム鉄の量は任意とすることができるが、鉄分として食品全体の0．1～10．0ppmとするのが好ましく、より好ましくは1．0～5．0ppmである。

【0007】本発明では乳化剤を使用する。乳化剤はヘム鉄を食品中に均一に分散させる作用を有するものであり、例えばショ糖脂肪酸エステル、モノグリセリン脂肪酸エステル、ポリグリセリン脂肪酸エステル、ソルビタン脂肪酸エステル、プロピレングリコール脂肪酸エステル、レシチン等があげられる。中でも親水性のものが好ましく、HLB9以上ものが良い。乳化剤は粉体のまま使用することもできるが、乳化剤を水又は油脂に溶解した液状物として使用するのが好ましい。乳化剤溶液の濃度は、特に制限されないが0．01～5％が好ましく、より好ましくは0．1～2％である。また、ヘム鉄と乳化剤との割合（重量比）は、100：1～1：100が望ましく、好ましくは20：1～1：10である。ここで、油脂を使用する場合には、例えばコーン油、大豆油、ナタネ油、ゴマ油、コメ油、サフラワー油、ヤシ油、パーム核油、カカオ油、ヒマワリ油、綿実油等の植物性油脂、バター、ヘット、ラード等の動物性油脂の1種又は2種以上の混合物などを使用するのがよい。

【0008】本発明で用いるパプリカ色素としては、液状、粉末状などがあげられるが、決してこれらに限定されるものではない。しかしパプリカ色素の好ましい形態は液状であり、パプリカ色素の使用量は、ヘム鉄に対して、パプリカ色素／ヘム鉄の重量比が1／100～1／1、好ましくは1／10～1／2となるようにするのがよい。

【0009】本発明で用いるジンジャー及び／又はガー

リックとして、生のもの、これを冷凍したもの、乾燥したものなどが使用できる。好ましくは、生のもの（又はこれを冷凍したもの）である。ジンジャー及び／又はガーリックは、ヘム鉄由来の苦味、生臭味、金属味を抑制する作用を有する。ジンジャー及び／又はガーリックは、ヘム鉄に対して、（ジンジャー及び／又はガーリック）／ヘム鉄の重量比が１／１～１０／１、好ましくは２／１～４／１となるようにするのがよい。

【００１０】本発明では上記成分を必須とするが、必要に応じて種々の成分を用いることができる。具体的には、ヘム鉄を含有させる食品で用いられる各種成分があげられる。例えば、ヘム鉄は、カレー、ハヤシ、シチュー、スープ、マーボー豆腐、酢豚等に添加でき、その他にもミートソース、デミグラソース、カレーソース等の各種ソース類、田楽みそ、加工みそ、トウバンジャン、テンメンジャン、みそ汁の素、丼物用ソース、回鍋肉用ソース等にも添加できるので、これらの食品で用いられている成分である。このうち、塩などの調味料、澱粉や油脂（ルウ）などがあげられる。

【００１１】塩の量は特に制限されないが、対象となる液状食品の具材を除いた液状部分の0.１％以上更には0.５重量％以上である場合、ヘム鉄の黒い凝集物を防止できるので好ましい。具体的には、0.５～1.０％程度添加するのがよい。この際、塩（食塩）自体を使用する代わりに、例えば醤油、みそ、ウスターソース等を使用することもできる。本発明で用いる澱粉としては、例えば小麦粉、米粉、小麦澱粉、トウモロコシ澱粉、馬鈴薯澱粉、米澱粉、タピオカ澱粉等があげられる。澱粉の使用量も、任意であるが、対象となる食品の具材を除いた部分の１％以上とするのが好ましく、より好ましくは３％以上である。具体的には、３～１０％である。この量で澱粉を使用するとヘム鉄の黒い凝集物を防止できるので好ましい。

【００１２】本発明で用いる油脂としては、例えばコーン油、大豆油、ナタネ油、ゴマ油、コメ油、サフラワー油、ヤシ油、パーム核油、カカオ油、ヒマワリ油、綿実油等の植物性油脂、バター、ヘット、ラード等の動物性油脂の１種又は２種以上の混合物があげられる。油脂の量も任意であるが、食品全体中、１～２０％とするのが好ましく、より好ましくは６～１０％である。本発明ではさらにシナモン、セージ、タイム、クローブ、ローレルカルダモン、オレガノ、ナツメグ、メース、レッドペッパー、ホワイトペッパー、ブラックペッパー等の香辛料、ショ糖、果糖、ブドウ糖、乳糖等の甘味料の他、果実ペースト、野菜ペースト、水、着香料、着色料、調味料等を適宜使用することができる。

【００１３】本発明で上述したカレーなどのヘム鉄含有食品をつくるための具材としては、キャベツ、レタス、シュンギク、ゴボウ、ニンジン、セロリ、玉葱、長ネギ、フキ、カリフラワー、ブロッコリー等の野菜類、ジャガイモ、サツマイモ等のイモ類、大豆、小豆、エンドウ豆等の豆類、豆腐等の大豆加工品、鮭、アサリ、カニ、イカ、タコ等の魚介類、牛肉、豚肉、鶏肉等の畜肉類等を例示し得、それらの１種又は２種以上を適宜選択して使用することができる。

【００１４】本発明では上記必須成分を使用する限り任意の方法でヘム鉄含有食品を製造することができるが、ヘム鉄、乳化剤、パプリカ色素、ジンジャー及び／又はガーリックを混合した後、油脂又は澱粉などの他の成分と加熱混合するのが好ましい。又は、ヘム鉄、乳化剤、ジンジャー及び／又はガーリックを混合した後、油脂又は澱粉と加熱混合し、次いでパプリカ色素混合するのが好ましい。ここで、混合は各成分が均一となるように、高速撹拌機やサイレントカッターなどを用いて行うのが好ましく、ついで加熱混合は例えば、横型レオニーダー（梶原工業株式会社製）などを用いて、９０～９５℃に達した後、９０～９５℃で３～１０分間加熱を行うのが好ましい。次に、得られたヘム鉄含有食品に、必要によりレトルトパウチなどの密封包装容器に充填し加圧加熱殺菌等の加熱殺菌処理を施すことができ、又、加熱殺菌処理の他に、殺菌することなく無菌充填により包装されるか、あるいは、冷凍処理や乾燥処理等を施しても良い。

【００１５】

【発明の効果】本発明によれば、色調と風味の良好なヘム鉄含有食品を得ることができる。次に実施例により本発明を説明する。

【００１６】

【実施例】

実施例１

ヘム鉄４重量部とショ糖脂肪酸エステル（ＨＬＢ１５）水溶液（濃度０．４％）１００重量部、パプリカ色素１重量部、ジンジャー４重量部及びガーリック４重量部を、高速撹拌機を用いて均一に混合した（ヘム鉄混合物という）。一方、玉葱３００重量部をみじん切りにした後、バター１２５重量部で３０分間炒めた。これに、カレー粉５０重量部、小麦粉１３０重量部をバター１００重量部で２０分間炒めて得た小麦粉ルー、ブイヨン２０００重量部、リンゴ（すりおろしたもの）２００重量部、トマト（みじん切りにしたもの）２１０重量部、チャツネ２００重量部、食塩２０重量部、具材として牛肉（予めバターで炒めたもの）８５０重量部、ニンジン（１０分間ボイルしたもの）３００重量部、ジャガイモ（１０分間ボイルしたもの）８５０重量部を添加混合し、さらに上記ヘム鉄混合物を加えて弱火で沸騰するまで煮込んだ。得られたカレーを２００ｇずつレトルトパウチ（ポリエチレンテレフタレート／ナイロン／アルミニウム／無延伸ポリプロピレン）に充填密封し、１２１°Ｃ、２０分間の条件で加圧加熱殺菌処理を施した。得られたレトルトカレーを５分間熱湯で加温した後、パウ

チを開封し、カレーを皿に注ぎ出した。得られたカレーは、通常のカレーと同様の良好な外観を呈するものであった。尚、使用したヘム鉄は、ヘモグロビン分解物として得られたヘム鉄の水懸濁液に、キトサン水溶液を添加し、撹き混ぜながらｐＨを調整して、懸濁状態で得られるヘム鉄を、フィルタープレス等で分離することにより製造されたものである。

【００１７】実施例２

パプリカ色素をヘム鉄混合物中に添加せず、具材を除いた他の全ての材料を混合した後に添加して混合し、その後具材を加えた以外は実施例１と同様の方法によりレトルトカレーを得た。得られたカレーは、通常のカレーと同様の良好な外観と風味を呈するものであった。

比較例１

パプリカ色素、ジンジャー及びガーリックを使用しないことを除き、実施例１と同様にしてレトルトカレーを得た。得られたカレーは、黒緑っぽい外観を有し、又、ヘム鉄特有の生臭味と金属臭が感じられるものであった。

Espacenet

Bibliographic data: JP2012016336 (A) — 2012-01-26

FOOD MATERIAL CONTAINING HEME IRON AND METHOD FOR PRODUCING THE SAME

Inventor(s): TANAKA KENICHI; IGARASHI OSAMU ± (TANAKA KENICHI, ; IGARASHI OSAMU)

Applicant(s): EKOOPASU LAB KK; IDEMITSU TECHNOFINE CO LTD ± (EKOOPASU LABORATORIES:KK, ; IDEMITSU TECHNOFINE CO LTD)

Classification: **- international:** *A23L1/30*
- cooperative:

Application number: JP20100157321 20100709 Global Dossier

Priority number (s): JP20100157321 20100709

Abstract of JP2012016336 (A)

PROBLEM TO BE SOLVED: To provide a food material containing a high density heme iron of which color or aroma is easily modulated, and to provide a method for easily and effectively producing the food material containing the high density heme iron. ;SOLUTION: The food material containing the heme iron is made by crushing a dried fish meat. The food material containing the heme iron is made by crushing a remaining extraction after that the dried meat is extracted with hot water. An average particle diameter of the food material containing the heme iron ranges from 1 [mu]m to 1,000 [mu]m. ;COPYRIGHT: (C)2012,JPO&INPIT;PROBLEM TO BE SOLVED: To provide a food material containing a high density heme iron of which color or aroma is easily modulated, and to provide a method for easily and effectively producing the food material containing the high density heme iron.SOLUTION: The food material containing the heme iron is made by crushing a dried fish meat. The food material containing the heme iron is made by crushing a remaining extraction after that the dried meat is extracted with hot water. An average particle diameter of the food material containing the heme iron ranges from 1 [mu]m to 1,000 [mu]m.

(19)日本国特許庁(JP)　(12)公開特許公報(A)　(11)特許出願公開番号
特開2012-16336
(P2012-16336A)
(43)公開日　平成24年1月26日(2012.1.26)

(51)Int.Cl.		F I		テーマコード（参考）
A23L 1/30	(2006.01)	A23L 1/30	A	4B018

審査請求 未請求　請求項の数 12　ＯＬ　（全 10 頁）

(21)出願番号　特願2010-157321 (P2010-157321)
(22)出願日　平成22年7月9日 (2010.7.9)

(71)出願人　510191285
有限会社エコーパス・ラボラトリーズ
東京都西東京市南町一丁目５番２４号
(71)出願人　500242384
出光テクノファイン株式会社
東京都港区北青山一丁目３番６号
(74)代理人　110000637
特許業務法人樹之下知的財産事務所
(72)発明者　田仲　健一
東京都西東京市南町一丁目５番２４号
(72)発明者　五十嵐　脩
東京都墨田区東向島四丁目３９番２号

Ｆターム(参考)　4B018 MD07 MD08 MD20 MD74 ME14 MF01 MF06 MF07

(54)【発明の名称】ヘム鉄含有食品素材およびその製造方法

(57)【要約】
【課題】色や臭いの調整も容易な高濃度のヘム鉄含有食品素材を提供すると共に、簡易かつ効率的に高濃度のヘム鉄を含有する食品素材を製造する方法を提供すること。
【解決手段】本発明のヘム鉄含有食品素材は、魚類の乾燥肉を粉砕してなるヘム鉄含有食品素材であって、該ヘム鉄含有食品素材は、前記乾燥肉を熱水抽出した後の抽出残を粉砕してなるものであり、該ヘム鉄含有食品素材の平均粒子径が１μｍから１０００μｍまでの範囲であることを特徴とするものである。
【選択図】なし

【特許請求の範囲】
【請求項１】
魚類の乾燥肉を粉砕してなるヘム鉄含有食品素材であって、
該ヘム鉄含有食品素材は、前記乾燥肉を熱水抽出した後の抽出残を粉砕してなるものであり、
該ヘム鉄含有食品素材の平均粒子径が１μｍ以上１０００μｍ以下の範囲である
ことを特徴とするヘム鉄含有食品素材。
【請求項２】
請求項１に記載のヘム鉄含有食品素材において、
前記抽出残を、粉砕の前後のうちの少なくともいずれかで溶剤にて洗浄する
ことを特徴とするヘム鉄含有食品素材。
【請求項３】
請求項１または請求項２に記載のヘム鉄含有食品素材において、
前記抽出残を、粉砕する前に乾燥する
ことを特徴とするヘム鉄含有食品素材。
【請求項４】
請求項１から請求項３までのいずれか１項に記載のヘム鉄含有食品素材において、
前記ヘム鉄含有食品素材１００ｇ中のヘム鉄含有量が、金属鉄換算で、７ｍｇ／１００ｇ以上である
ことを特徴とするヘム鉄含有食品素材。
【請求項５】
請求項１から請求項４までのいずれか１項に記載のヘム鉄含有食品素材において、
前記乾燥肉が魚節である
ことを特徴とするヘム鉄含有食品素材。
【請求項６】
請求項２から請求項５までのいずれか１項に記載のヘム鉄含有食品素材において、
前記溶剤がエチルアルコールである
ことを特徴とするヘム鉄含有食品素材。
【請求項７】
魚類の乾燥肉を熱水抽出して抽出残を得る抽出残製造工程と、
前記抽出残の平均粒子径が１μｍ以上１０００μｍ以下の範囲となるように粉砕する粉砕工程と、
を備えることを特徴とするヘム鉄含有食品素材の製造方法。
【請求項８】
請求項７に記載のヘム鉄含有食品素材の製造方法において、
前記粉砕工程前に、さらに、前記抽出残を溶剤にて洗浄する前洗浄工程を備える
ことを特徴とするヘム鉄含有食品素材の製造方法。
【請求項９】
請求項７または請求項８に記載のヘム鉄含有食品素材の製造方法において、
前記粉砕工程後に、さらに、粉砕後の抽出残を溶剤にて洗浄する後洗浄工程を備える
ことを特徴とするヘム鉄含有食品素材の製造方法。
【請求項１０】
請求項７から請求項９までのいずれか１項に記載のヘム鉄含有食品素材の製造方法において、
前記粉砕工程前に、さらに、前記抽出残を乾燥させる乾燥工程を備える
ことを特徴とするヘム鉄含有食品素材の製造方法。
【請求項１１】
請求項７から請求項１０までのいずれか１項に記載のヘム鉄含有食品素材の製造方法において、
前記乾燥肉が魚節である

ことを特徴とするヘム鉄含有食品素材の製造方法。
【請求項１２】
請求項８から請求項１１までのいずれか１項に記載のヘム鉄含有食品素材の製造方法において、
前記溶剤がエチルアルコールである
ことを特徴とするヘム鉄含有食品素材の製造方法。
【発明の詳細な説明】
【技術分野】
【０００１】
本発明は、微粒子状のヘム鉄含有食品素材およびその製造方法に関する。
【背景技術】
【０００２】
動物の血液中に含まれるヘモグロビンのヘム部を濃縮して得られたいわゆる「ヘム鉄」は、体内での消化吸収に優れるので鉄補給用の補助食品として有用である。一方、ヘム鉄は、水に溶解しないため必ずしも濃縮が容易ではなく、これまで種々の製法が提案されている。例えば、溶血したヘモグロビンをｐＨ１０以上、または３以下に調整しながら、７０℃以上の温度にて少なくとも１０分間以上保持し、その後使用するプロテアーゼの最適なｐＨおよび温度で酵素分解し、酵素を失活させ、分解液のｐＨを５～６に調整することにより得られる等電点沈殿物をヘム鉄として回収する方法が提案されている（特許文献１参照）。また、魚節を粉末状とし、ｐＨを１程度の強酸性にした水溶液でヘム鉄を可溶化して抽出し、抽出液をアルカリ性にしてヘム鉄を沈殿させ回収する方法が提案されている（特許文献２参照）。
【先行技術文献】
【特許文献】
【０００３】
【特許文献１】特開平５－２４４８９９号公報
【特許文献２】特開２００４－１８０６０２号公報
【発明の概要】
【発明が解決しようとする課題】
【０００４】
しかしながら、特許文献１に記載の方法は、ｐＨの調整や、酵素を使うなど作業が煩雑であり、得られるヘム鉄の収率も高いものではなく、さらに、黒褐色の色や血生臭さを除去（調整）するのが困難であるため、食品への応用に制限があった。また、特許文献２に記載の方法も、ｐＨの調整を行ってヘム鉄の可溶化および再沈殿を行うものであり、効率的な方法とは言えない。
【０００５】
本発明の目的は、色や臭いの調整も容易な高濃度のヘム鉄含有食品素材を提供すると共に、簡易かつ効率的に高濃度のヘム鉄を含有する食品素材を製造する方法を提供することにある。
【課題を解決するための手段】
【０００６】
従来、魚節から熱水抽出などにより出汁をとった後の抽出残は腐敗しやすいために食品素材として利用することは困難と考えられており、肥料として利用したり、産業廃棄物として廃棄したりしていた。これに対し、本発明者らは、従来の技術常識を覆し、前記抽出残を特定の範囲の平均粒子径となるように粉砕すれば、粉砕後の抽出残中の水分量を少なくすることができるために保存しやすくなり、食品素材としても利用できることを見出した。そして、このような食品素材は、驚くべきことに、高濃度のヘム鉄を含有しており、食品としての色調および加工性の点でも好ましいものであり、しかも動物などの血液を原料としていないために血生臭さもなく、臭気の点でも好ましいものであることを見出した。本発明は、このような知見に基づいて完成されたものである。

すなわち、本発明のヘム鉄含有食品素材は、魚類の乾燥肉を粉砕してなるヘム鉄含有食品素材であって、該ヘム鉄含有食品素材は、前記乾燥肉を熱水抽出した後の抽出残を粉砕してなるものであり、該ヘム鉄含有食品素材の平均粒子径が１μｍ以上１０００μｍ以下の範囲であることを特徴とするものである。

【０００７】

本発明のヘム鉄含有食品素材においては、前記抽出残を、粉砕の前後のうちの少なくともいずれかで溶剤にて洗浄することが好ましい。

本発明のヘム鉄含有食品素材においては、前記抽出残を、粉砕する前に乾燥することが好ましい。

本発明のヘム鉄含有食品素材においては、ヘム鉄含有食品素材１００ｇ中のヘム鉄含有量が、金属鉄換算で、７ｍｇ／１００ｇ以上であることが好ましい。

本発明のヘム鉄含有食品素材においては、前記乾燥肉が魚節であることが好ましい。

本発明のヘム鉄含有食品素材においては、前記溶剤が水または有機溶媒であることが好ましく、前記有機溶媒はエチルアルコールであることが好ましい。

【０００８】

本発明のヘム鉄含有食品素材の製造方法は、魚類の乾燥肉を熱水抽出して抽出残を得る抽出残製造工程と、前記抽出残の平均粒子径が１μｍ以上１０００μｍ以下の範囲となるように粉砕する粉砕工程と、を備えることを特徴とする方法である。

【０００９】

本発明のヘム鉄含有食品素材の製造方法においては、前記粉砕工程前に、さらに、前記抽出残を溶剤にて洗浄する前洗浄工程を備えることが好ましい。

本発明のヘム鉄含有食品素材の製造方法においては、前記粉砕工程後に、さらに、粉砕後の抽出残を溶剤にて洗浄する後洗浄工程を備えることが好ましい。

本発明のヘム鉄含有食品素材の製造方法においては、前記粉砕工程前に、さらに、前記抽出残を乾燥させる乾燥工程を備えることが好ましい。

本発明のヘム鉄含有食品素材の製造方法においては、前記乾燥肉が魚節であることが好ましい。

本発明のヘム鉄含有食品素材の製造方法においては、前記溶剤がエチルアルコールであることが好ましい。

【発明の効果】

【００１０】

本発明のヘム鉄含有食品素材によれば、そのまま高濃度のヘム鉄を摂取できる食品にできるだけでなく、微粒子状であるため各種の食品などの素材としても好適に使用できる。また、本発明のヘム鉄含有食品素材の製造方法によれば、簡易かつ効率的に、色や臭いの調整も容易な高濃度のヘム鉄を含有する食品素材を製造することができる。

【発明を実施するための形態】

【００１１】

以下、本発明をその好適な実施形態に即して詳細に説明する。

先ず、本発明のヘム鉄含有食品素材の製造方法について説明する。すなわち、本発明のヘム鉄含有食品素材の製造方法は、魚類の乾燥肉を熱水抽出して抽出残を得る抽出残製造工程と、前記抽出残の平均粒子径が１μｍ以上１０００μｍ以下の範囲となるように粉砕する粉砕工程と、を備えることを特徴とする方法である。

【００１２】

抽出残製造工程においては、魚類の乾燥肉を熱水抽出して抽出残を得る。

本発明で用いる魚類の乾燥肉としては、魚類を乾燥させたものであれば特に限定されないが、得られる食品素材のヘム鉄含有量が高いという観点から、魚節を用いることが好ましい。また、前記魚類としては、例えば、鰹、鯖、秋刀魚、鰯、鰤などの青魚が挙げられる。これらの中でも、入手しやすく、また得られる食品素材のヘム鉄含有量を高くできるという観点から、鰹、鯖が好ましく、鰹が特に好ましい。これらの魚類の乾燥肉は１種を単独で用いてもよく、２種以上を組み合わせて用いてもよい。

【００１３】
前記魚類の乾燥肉を熱水抽出する場合には、熱水抽出における処理温度は８０℃以上１００℃以下の範囲とすることが好ましく、９０℃以上１００℃以下の範囲とすることがより好ましい。処理温度が前記下限未満では、抽出が不十分となるために得られる食品素材のヘム鉄含有量を高くしにくくなる傾向にあり、他方、前記上限を超えるようにする場合には、特別な設備が必要となるため、製造コストが高くなる傾向にある。また、熱水抽出における処理時間は１０分間以上２時間以下の範囲とすることが好ましく、２０分間以上５０分間以下の範囲とすることがより好ましい。処理時間が前記下限未満では、抽出が不十分となるために得られる食品素材のヘム鉄含有量を高くしにくくなる傾向にあり、他方、前記上限を超えると、製造コストが高くなる傾向にある。

【００１４】
粉砕工程においては、前記抽出残の平均粒子径が１μｍ以上１０００μｍ以下の範囲となるように粉砕する。
本発明において平均粒子径は、５０％質量粒子径のことをいう。そして、５０％質量粒子径とは、測定対象の粉体の集団の全質量を１００％として累積カーブを求めたとき、その累積カーブの質量の値が５０％となる点の粒子径のことをいう。このような平均粒子径は、光散乱法により測定することができる。

【００１５】
前記抽出残を粉砕する方法としては、例えば、カッターミル、ハンマーミル、ビーズミル、ジェットミル、ボールミルなどを用いる方法を採用することができる。
また、本発明においては、前記抽出残を粉砕する前に、前記抽出残を乾燥しておくことが好ましい。これによれば、抽出残の粉砕工程をさらに効率よく行うことが可能となる。また、粉砕前の抽出残から水分を除去することが可能となるため、抽出残の腐敗を抑制することが可能となる。このように抽出残を乾燥する場合には、乾燥および粉砕の効率の観点から、乾燥温度は５０℃以上１００℃以下の範囲であることが好ましく、６０℃以上８０℃以下の範囲であることがより好ましい。また、乾燥時間は、３０分間以上２４時間以下の範囲であることが好ましく、３時間以上１２時間以下の範囲であることがより好ましい。

【００１６】
本発明においては、前記粉砕工程前に、さらに、前洗浄工程を備えることが好ましい。このような工程により、色や臭いを除去することできる。
前洗浄工程においては、前記抽出残を溶剤にて洗浄する。
前洗浄工程で用いる溶剤としては、例えば、水、有機溶媒が挙げられる。有機溶媒としては、例えば、メチルアルコール、エチルアルコール、イソプロピルアルコールなどのアルコール類；アセトン、エチルメチルケトンなどのケトン類；ジメチルエーテル、ジエチルエーテルなどのエーテル類；酢酸メチル、酢酸エチルなどのエステル類；ヘキサンなどの炭化水素類が挙げられる。これらの溶剤の中でも、得られる食品素材の安全性の観点から、水、エタノールなどが好ましい。また、得られる食品素材におけるヘム鉄含有量を高めるという観点から、エタノールが特に好ましい。また、これらの溶剤は１種を単独で用いてもよく、２種以上を組み合わせて用いてもよい。

【００１７】
前記抽出残を溶剤にて洗浄する場合には、前洗浄における処理温度は２０℃以上前記溶剤の沸点以下の範囲とすることが好ましく、４０℃以上前記溶剤の沸点以下の範囲とすることがより好ましく、６０℃以上前記溶剤の沸点以下の範囲とすることが特に好ましい。処理温度が前記下限未満では、洗浄が不十分となるために得られる食品素材のヘム鉄含有量を高くしにくくなる傾向にあり、他方、前記上限を超えるようにする場合には、特別な設備が必要となるため、製造コストが高くなる傾向にある。また、前洗浄における処理時間は２０分間以上２４時間以下の範囲とすることが好ましく、３時間以上２０時間以下の範囲とすることがより好ましく、９時間以上１５時間以下の範囲とすることが特に好ましい。処理時間が前記下限未満では、洗浄が不十分となるために得られる食品素材のヘム鉄

含有量を高くしにくくなる傾向にあり、他方、前記上限を超えると、製造コストが高くなる傾向にある。

【００１８】

本発明においては、前記粉砕工程後に、さらに、後洗浄工程を備えることが好ましい。このような工程により、色や臭いをさらに除去することができる。

後洗浄工程においては、粉砕後の抽出残を溶剤にて洗浄する。

後洗浄工程で用いる溶剤としては、前記前洗浄工程で用いる溶剤で用いる溶剤と同様のものを、同様の観点から用いることができる。

【００１９】

前記粉砕後の抽出残を溶剤にて洗浄する場合には、後洗浄における処理温度は２０℃以上前記溶剤の沸点以下の範囲とすることが好ましく、４０℃以上前記溶剤の沸点以下の範囲とすることがより好ましく、６０℃以上前記溶剤の沸点以下の範囲とすることが特に好ましい。処理温度が前記下限未満では、洗浄が不十分となるために得られる食品素材のヘム鉄含有量を高くしにくくなる傾向にあり、他方、前記上限を超えるようにする場合には、特別な設備が必要となるため、製造コストが高くなる傾向にある。また、後洗浄における処理時間は２０分間以上２４時間以下の範囲とすることが好ましく、３時間以上２０時間以下の範囲とすることがより好ましく、９時間以上１５時間以下の範囲とすることが特に好ましい。処理時間が前記下限未満では、洗浄が不十分となるために得られる食品素材のヘム鉄含有量を高くしにくくなる傾向にあり、他方、前記上限を超えると、製造コストが高くなる傾向にある。

【００２０】

以上説明した本発明のヘム鉄含有食品素材の製造方法によれば、前記抽出残製造工程および前記粉砕工程を行うことにより，簡易かつ効率的に高濃度のヘム鉄を含有する食品素材を製造することができる。また，前記粉砕工程の前後に、必要に応じて、前記前洗浄工程および前記後洗浄工程を行うことができ、これらの工程により、得られる食品素材のヘム鉄含有量を高めることができると共に、色や臭いを除去することもできる。

【００２１】

次に、本発明のヘム鉄含有食品素材について説明する。本発明のヘム鉄含有食品素材は、前述した本発明のヘム鉄含有食品素材の製造方法により製造することができる。

すなわち，本発明の第１のヘム鉄含有食品素材は、前記抽出残製造工程および前記粉砕工程を行うことにより得ることができる。また、本発明の第２のヘム鉄含有食品素材は、前記抽出残製造工程、前記前洗浄工程および前記粉砕工程を行うことにより得ることができる。また、前記第１および第２のヘム鉄含有食品素材には、さらに、前記後洗浄工程を行うことが好ましい。

【００２２】

本発明のヘム鉄含有食品素材に用いる魚類の乾燥肉および溶剤としては、前述した本発明のヘム鉄含有食品素材の製造方法に用いるものと同様のものを用いることができる。また、本発明のヘム鉄含有食品素材においては、前記抽出残製造工程、前記前洗浄工程，前記粉砕工程および前記後洗浄工程における処理条件を、前述した本発明のヘム鉄含有食品素材の製造方法における場合と同様の処理条件とすることが好ましい。

【００２３】

そして、本発明のヘム鉄含有食品素材の平均粒子径は１μｍ以上１０００μｍ以下の範囲であることが必要である。平均粒子径が１０００μｍを超えると、得られる食品素材の色調および加工性や食感が悪くなる。他方、平均粒子径を１μｍ未満とすることは困難であり、製造コストが高くなる。また，本発明のヘム鉄含有食品素材の平均粒子径は、食品素材としてのハンドリング性の観点から、１０μｍ以上５００μｍ以下の範囲であることが好ましく、２０μｍ以上３００μｍ以下の範囲であることが特に好ましい。

また、本発明のヘム鉄含有食品素材中の水分量（質量基準）は、ヘム鉄含有食品素材を腐敗しにくくするという観点から、１０質量％以下であることが好ましく、７質量％以下であることがより好ましい。

さらに、本発明のヘム鉄含有食品素材はヘム鉄含有量が高いものであることが好ましい。具体的には、ヘム鉄含有食品素材１００ｇ中のヘム鉄含有量が、金属鉄換算で、７ｍｇ／１００ｇ以上であることが好ましい、１５ｍｇ／１００ｇ以上であることがより好ましい。なお、このようなヘム鉄含有量は、前記ヘム鉄含有食品素材中の水分量を０質量％に換算して求めたものである。

本発明のヘム鉄含有食品素材は、例えば、パン、クッキー、ふりかけ、ヨーグルト、ドリンク、マーガリン、栄養素を補うためのサプリメントなどの食品の素材として特に好適に使用することができる。

【実施例】

【００２４】

次に、本発明を実施例および比較例によりさらに詳細に説明するが、本発明はこれらの例によってなんら限定されるものではない。

【００２５】

［実施例１］

フレーク状の鰹節を温度９５℃の熱水中に４０分間浸漬して熱水抽出した。その後、抽出物を分離して、抽出残を回収した（抽出残製造工程）。得られた抽出残を、温度７０℃にて７時間乾燥した。乾燥後の抽出残を、カッターミルを用いて粉砕して食品素材を得た（粉砕工程）。なお、得られた食品素材における水分量は６．９質量％であった。

【００２６】

［実施例２］

フレーク状の鰹節を温度９５℃の熱水中に４０分間浸漬して熱水抽出した。その後、抽出物を分離して、抽出残を回収した（抽出残製造工程）。得られた抽出残を、温度７０℃にて７時間乾燥した。乾燥後の抽出残を、カッターミルを用いて粉砕した（粉砕工程）。粉砕後の抽出残を、室温（２５℃）のエチルアルコール中に７時間浸漬して洗浄した（後洗浄工程）。その後、洗浄後の抽出残を温度７０℃にて７時間乾燥して食品素材を得た。なお、得られた食品素材における水分量は６．０質量％であった。

【００２７】

［実施例３］

フレーク状の鰹節を温度９５℃の熱水中に４０分間浸漬して熱水抽出した。その後、抽出物を分離して、抽出残を回収した（抽出残製造工程）。得られた抽出残を、室温（２５℃）のエチルアルコール中に７時間浸漬して洗浄した（前洗浄工程）。洗浄後の抽出残を、温度７０℃にて７時間乾燥した。乾燥後の抽出残を、カッターミルを用いて粉砕して食品素材を得た（粉砕工程）。なお、得られた食品素材における水分量は５．９質量％であった。

【００２８】

［実施例４］

フレーク状の鰹節を温度９５℃の熱水中に４０分間浸漬して熱水抽出した。その後、抽出物を分離して、抽出残を回収した（抽出残製造工程）。得られた抽出残を、室温（２５℃）のエチルアルコール中に７時間浸漬して洗浄した（前洗浄工程）。洗浄後の抽出残を、温度７０℃にて７時間乾燥した。乾燥後の抽出残を、カッターミルを用いて粉砕した（粉砕工程）。粉砕後の抽出残を、室温（２５℃）のエチルアルコール中に７時間浸漬して洗浄した（後洗浄工程）。その後、洗浄後の抽出残を温度７０℃にて７時間乾燥して食品素材を得た。なお、得られた食品素材における水分量は４．９質量％であった。

【００２９】

［比較例１］

フレーク状の鰹節を温度９５℃の熱水中に４０分間浸漬して熱水抽出した。その後、抽出物を分離して、抽出残を回収し、乾燥して食品素材を得た（抽出残製造工程）。得られた食品素材における水分量は８．０質量％であった。

【００３０】

＜性能評価＞

実施例１から実施例４まで、および比較例１で得られた食品素材の性状（平均粒子径、臭気、黄色度、ヘム鉄含有量、安息角、嵩密度）を以下に示す方法により評価した。得られた結果および水分量に関する結果を表１に示す。

（i）平均粒子径

得られた食品素材の平均粒子径を、粒子径分布測定装置（日機装株式会社製、「マイクロトラック　ＭＴ３０００」）を用いて測定した。

（ii）臭気の評価

得られた食品素材の臭気を以下に示す基準に基づいて評価した。

◎：臭いは殆どない。

○：臭いはあるが、気にはならない程度である。

△：やや強い臭いはあるが、血生臭くはない。

×：強い臭いがあり、しかも血生臭い。

（iii）黄色度の測定

得られた食品素材の黄色度（ＹＩ値）を、測色色差計（コニタミノルタ株式会社製、「色彩色差計　ＣＲ－２００，ＣＲ－２３１」）を用いて測定した。なお、黄色度が低いほど、食品としての色調に優れている。

（iv）ヘム鉄含有量

得られた食品素材のヘム鉄含有量を、誘導結合プラズマ発光分光分析法（ＩＣＰ発光分光分析法）により、測定した。具体的には、ＩＣＰ発光分光分析装置（ＶＡＲＩＡＮ社製、「ＶｉｓｔａＰｒｏ－ＲＬ型」）を用いた。なお、食品素材１００ｇ中のヘム鉄含有量は、ヘム鉄を金属鉄換算し、食品素材中の水分量を０質量％に換算して求めたものである。単位は（ｍｇ／１００ｇ）である。

（v）安息角の測定

得られた食品素材の安息角を次のようにして測定した。すなわち、１００ｇの食品素材を試料として安息角測定装置（株式会社セイシン企業製、「ＭＴ－１０００」）に投入し、該試料を水平面へ落下させた。そして、落下した試料により形成された斜面と、水平面とがなす角度を、試料の安息角として測定した。なお、試料の水分量は５．０質量％から１０．０質量％までの範囲に入るように調整したものを用いた。なお、安息角が小さいほど、流動性に優れ、加工性に優れている。単位は（°）である。

（vi）嵩密度

得られた食品素材を試料として、該試料の嵩密度を、嵩密度測定器（株式会社セイシン企業製、「川北式カサ密度計　ＩＨ２０００型」）を用いて測定した。なお、試料の水分量は５．０質量％から１０．０質量％までの範囲に入るように調整したものを用いた。なお、嵩密度が高いほど、流動性および分散性に優れ、加工性に優れている。単位は（ｇ／ｃｍ^3）である。

【００３１】

【表１】

	平均粒子径 (μm)	臭気	黄色度	ヘム鉄含有量 (mg／100g)	安息角 (°)	嵩密度 (g／cm^3)	水分量 (質量%)
実施例1	42.4	△	67.4	8.53	60	0.457	6.9
実施例2	37.8	○	48.9	20.40	45	0.527	6.0
実施例3	38.2	○	42.2	20.50	45	0.512	5.9
実施例4	35.2	◎	41.8	22.00	39	0.541	4.9
比較例1	—	△	77.9	7.53	—	—	8.0

【００３２】

表１に示す結果からも明らかなように、本発明のヘム鉄含有食品素材（実施例１から実施例４まで）は、高濃度のヘム鉄を含有しており、食品としての色調および加工性の点でも好ましいものであり、しかも臭気の点でも好ましいものであることが確認された。また、前洗浄処理や後洗浄処理を行った場合（実施例２から実施例４まで）には、臭気、ヘム鉄含有量、並びに食品としての色調および加工性のうちの全ての点において向上が見込めることが確認された。

【産業上の利用可能性】

【００３３】

本発明のヘム鉄含有食品素材は、例えば、パン、クッキー、ふりかけ、ヨーグルト、ドリンク、マーガリン、栄養素を補うためのサプリメントなどの食品の素材として特に好適に使用することができる。

(12) INTERNATIONAL APPLICATION PUBLISHED UNDER THE PATENT COOPERATION TREATY (PCT)

(19) World Intellectual Property Organization
International Bureau

(43) International Publication Date
31 January 2013 (31.01.2013)

WIPO | PCT

(10) International Publication Number
WO 2013/013292 A1

(51) International Patent Classification: *A23C 19/055* (2006.01)

(21) International Application Number: PCT/CA2012/000445

(22) International Filing Date: 12 May 2012 (12.05.2012)

(25) Filing Language: English

(26) Publication Language: English

(30) Priority Data:
61/485,318 12 May 2011 (12.05.2011) US

(71) Applicant *(for all designated States except US)*: **UNIVERSITY OF GUELPH** [CA/CA]; 102-150 Research Lane, Guelph, Ontario N1G 4T2 (CA).

(72) Inventors; and
(75) Inventors/Applicants *(for US only)*: **LIN, Chunguo** [CA/CA]; 7 Evans Dr., Guelph, Ontario N1L 1L8 (CA). **CHEN, Jin** [CA/CA]; 211 Summerfield Drive, Guelf, Ontario N1L 1L3 (CA). **CORREDIG, Milena** [CA/CA]; 22 Charles Street, Guelph, ON N1H 2E3 (CA). **HILL, Art** [CA/CA]; 165 Hill Street W., Fergus, Ontario N1M 1G2 (CA).

(74) Agents: **BARTOSZEWICZ, Lola, A.** et al.; Sim & McBurney, 330 University Avenue, 6th Floor, Toronto, Ontario M5G 1R7 (CA).

(81) Designated States *(unless otherwise indicated, for every kind of national protection available)*: AE, AG, AL, AM, AO, AT, AU, AZ, BA, BB, BG, BH, BR, BW, BY, BZ, CA, CH, CL, CN, CO, CR, CU, CZ, DE, DK, DM, DO, DZ, EC, EE, EG, ES, FI, GB, GD, GE, GH, GM, GT, HN, HR, HU, ID, IL, IN, IS, JP, KE, KG, KM, KN, KP, KR, KZ, LA, LC, LK, LR, LS, LT, LU, LY, MA, MD, ME, MG, MK, MN, MW, MX, MY, MZ, NA, NG, NI, NO, NZ, OM, PE, PG, PH, PL, PT, QA, RO, RS, RU, RW, SC, SD, SE, SG, SK, SL, SM, ST, SV, SY, TH, TJ, TM, TN, TR, TT, TZ, UA, UG, US, UZ, VC, VN, ZA, ZM, ZW.

(84) Designated States *(unless otherwise indicated, for every kind of regional protection available)*: ARIPO (BW, GH, GM, KE, LR, LS, MW, MZ, NA, RW, SD, SL, SZ, TZ, UG, ZM, ZW), Eurasian (AM, AZ, BY, KG, KZ, RU, TJ, TM), European (AL, AT, BE, BG, CH, CY, CZ, DE, DK, EE, ES, FI, FR, GB, GR, HR, HU, IE, IS, IT, LT, LU, LV, MC, MK, MT, NL, NO, PL, PT, RO, RS, SE, SI, SK, SM, TR), OAPI (BF, BJ, CF, CG, CI, CM, GA, GN, GQ, GW, ML, MR, NE, SN, TD, TG).

Declarations under Rule 4.17:
— *as to applicant's entitlement to apply for and be granted a patent (Rule 4.17(ii))*

Published:
— *with international search report (Art. 21(3))*

(54) Title: SOY/MILK CHEESE-TYPE AND YOGHURT-TYPE PRODUCTS AND METHOD OF MAKING

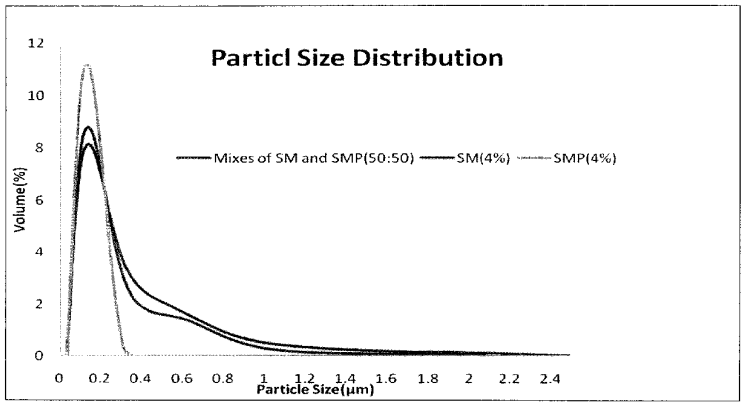

Figure 1

(57) Abstract: Novel soy/milk gels are provided useful for making cheese-type and yoghurt type products. Method for preparing such products are also disclosed herein. In particular, the invention relates to a soy/milk cheese-type product which is a blend of soy milk and milk and to a method for the preparation thereof. In further aspects, is a soy/milk yoghurt-type product and a method for the preparation thereof.

WO 2013/013292 A1

Soy/Milk Cheese-type and Yoghurt-type Products and Method of Making

Field of the Invention

The present invention relates to soy/milk gels useful for making soy/dairy products. In particular, the invention relates to a soy/milk cheese-type product which is a blend of soy milk and milk and also relates to a soy/milk yoghurt type product which is a blend of soy milk and milk, both such products made from a soy/milk gel. The invention also relates to methods for the preparation thereof.

Background of the Invention

Soy products are becoming increasingly accepted by consumers due to the health benefits associated with the consumption of soy protein. Soy ingredients are widely used in a number of food products as they have good processing functionality. The protein obtained from soybeans is easily digestible, and thus it is valuable as a substitute for animal protein. Soy products containing high proteins have been associated with cholesterol lowering abilities. Furthermore, soy contains isoflavones which have been shown to be beneficial in the prevention of osteoporosis and inhibition of spreading of various cancers. Soybeans incorporated into food products could substantially lower the cost, while delivering the benefit of increasing the nutritional value of the final food products.

In the past decades, many attempts have been made in the production of soy cheese using soy milk. Examples of apparatus and processes for the processing of soy and or the production of soy milk may be found in U.S. 5,183,681, U.S. 5,270,450, U.S. 4,906,482, U.S. 4,971,825, U.S. 4,971,810, U.S. 5,077,062 and U.S. 5,137,736 (the disclosures of which are incorporated herein by reference in their entirety). Examples of soy cheese processes are found in U.S. 6,495,187, U.S. 6,455,081, U.S. 6,413,569, U.S. 6,399,135, U.S. 6,383,531 and U.S. 6,254,900 (the disclosures of which are incorporated herein by reference in their entirety). However, in most cases the soy cheeses are not commercialized to any extent because it is difficult to obtain a soy cheese with body and texture comparable to that of natural cheese. There are large differences in the structure and processing functionality between soy proteins and milk proteins, and therefore it is not possible

to obtain similar textures with matrices composed with soy protein. In addition other functions of the cheese, for example, crumbliness, color or meltability are also not matched with tofu like products.

It is therefore desirable to develop a soy milk cheese product that overcomes at least some of the deficiencies of the prior art soy cheeses.

Summary of the Invention

Novel soy/milk gels are provided that are used to make soy/milk cheese type products. The gels are also suitable for use to make soy/milk yoghurt type products.

The present invention in an aspect provides a novel soy milk and milk cheese-type product (herein referred to as "soy/milk cheese-type product"). The soy milk and milk cheese-type product is a combination of soy milk and milk that has been simultaneously gelled (co-gelled). The soy milk and milk cheese-type product is a soy/milk curd that can be used for a variety of soft ripened cheese products, having good texture and body characteristics. The soy/milk cheese-type product has a favorable texture that is comparable to commercial regular cheese products, and has a synergy of health benefits associated with the presence of milk proteins, soy proteins and isoflavones.

The invention in further aspects provides a novel soy milk and milk yoghurt type product (herein referred to as "soy/milk yoghurt-type product"). The soy milk and milk yoghurt-type product is a combination of soy milk and milk that has been simultaneously gelled (co-gelled) and then syneresis (water released from the gel) is minimized such that the soy/milk gel retains a high water holding capacity to have a consistency of a yoghurt.

The invention also encompasses a novel method for making the soy/milk cheese-type product and the soy/milk yoghurt-type product of the present invention whereby acidification of soy protein and renneting of casein occurs simultaneously. These two gel forming processes as combined and occurring essentially simultaneously lead to the formation of a soy/milk gels used and then treated to make either a cheese-type product (soy/milk curd) with desirable properties or a yoghurt-type product with desirable properties.

According to an aspect of the present invention is a soy/milk cheese-type product.

According to another aspect of the present invention is a soy/milk cheese-type product having desired hardness, springiness, cohesiveness and chewiness similar to a milk-only soft cheese.

According to an aspect of the present invention is a soy/milk curd.

According to an aspect of the present invention is a soy/milk yoghurt-type product. Said soy/milk yoghurt-type product being similar in characteristics to dairy type yoghurts.

According to another aspect of the present invention is a soy/milk yoghurt-type product having desirable hardness and water holding capacity similar to a milk only yoghurt.

According to an aspect of the present invention is a soy/milk gelled slurry (gel).

In aspects of the invention, the novel soy/milk gelled slurry (gel) can be treated to provide a cheese-type or a yoghurt-type product.

According to yet another aspect of the present invention is a soy/milk cheese-type product comprising mixed gels of rennet coagulated casein micelles and acid coagulated soy protein.

According to still another aspect of the present invention is a soy/milk cheese-type product comprising gel structures of strands of interacting soy protein and milk protein.

According to yet another aspect of the present invention is a soy/milk yoghurt-type product comprising mixed gels of rennet coagulated casein micelles and acid coagulated soy protein.

According to still another aspect of the present invention is a soy/milk yoghurt-type product comprising gel structures of strands of interacting soy protein and milk protein.

According to another aspect of the present invention is a method for making a soy/milk cheese-type product, the method comprising:

(a) mixing heated soy milk with cold renneted milk;

(b) cooling and acidifying to cause simultaneous gelation of (a) ;

(c) coagulating cooled (b) and setting;

(d) incubating (c) overnight; and

(e) dry salting (d) to form said cheese-type product.

Alternatively, direct acidification of the hot soya milk may be effected. In this case. citric acid, lactic acid or glucono-delta-lactone (GdL) is added to the warm soy milk/milk mixture first.

In aspects, the method further comprises allowing the dry salted cheese-type product to dry refrigerated and then immersing in a brine solution.

According to another aspect of the invention is a method for making a soy/milk cheese-type product, the method comprising:

(a) mixing heated soy milk with cold renneted milk;

(b) acidifying and cooling (a) to effect simultaneous gelation of the soy milk and the milk;

(c) coagulating cooled (b) and setting;

(d) allowing (c) to incubate overnight; and

(e) dry salting (d) to form said cheese-type product.

In aspects of the method, the acidifying comprises adding lactic acid, citric acid, or GdL to (a). In further aspects, the acidifying comprises adding lactic acid-producing bacteria to the cold renneted milk prior to mixing with the heated soy milk.

According to another aspect of the present invention is a soy milk and milk cheese-type product made by a method comprising:

(a) mixing heated soy milk with cold renneted milk that comprises an acidifying agent;

(b) cooling to effect gelation of (a);

(c) coagulating cooled (b) and setting;

(d) allowing (c) to incubate overnight; and

(e) dry salting (d) to form said cheese-type product.

According to another aspect of the invention is a soy/milk cheese-type product prepared by a method comprising:

(a) mixing hot soy milk with cold renneted milk;

(b) acidifying and adding a firming agent to said mixture from (a);

(c) mixing the product resulting from (b) for a time sufficient to cool (b) and effect simultaneous gelation of soy milk and milk;

(d) transfer the product resulting from (c) into molds at a temperature of less than about 35°C; and

(e) optionally salting (d).

In aspects, the acidifying agent is a lactic bacterial culture. As the cold renneted milk heats when mixed with the hot soy milk, culturing of the milk takes place as the bacteria then grow and multiply and the soy milk gels simultaneously with the renneted milk.

According to another aspect of the present invention is a method for making a soy milk and milk cheese-type product, the method comprising;

- adding lactic culture to renneted milk and storing refrigerated overnight without coagulation;
- adding hot soy milk at about 80-85°C and mixing during which time the temperature of the mixture cools to about 38-40°C;
- slowly adding a gelation agent and stirring to allow the mixture to coagulate and form a curd;
- incubating the curd overnight and salting; and
- optionally immersing the salted curd in a brine solution.

In aspects of the method, when a soy/milk gel is formed, the soy/milk gel can be treated such that the extent of syneresis is minimized so that there is a high water holding capacity. In this manner, the soy/milk gel with a high water holding capacity has a texture more in keeping with a milk yoghurt product.

According to a further aspect of the invention is a soy/dairy yoghurt- type product comprising mixed gels of rennet coagulated casein micelles and acid coagulated soy protein.

According to another aspect of the invention is a method for making a soy/milk gel, the method comprising:

(a) mixing heated soy milk with cold renneted milk;

(b) acidifying and cooling (a) to effect simultaneous gelation of the soy milk and the milk; and

(c) optionally fermenting (b).

In further aspects, the method further comprises the step of decreasing syneresis to increase water holding capacity of said gel. The invention encompasses a soy/milk yoghurt product made such method.

According to yet a further aspect of the invention is a soy/milk cheese-type product or a soy/milk yoghurt-type product, said products comprising mixed gels of rennet coagulated casein micelles and acid coagulated soy protein.

Other features and advantages of the present invention will become apparent from the following detailed description. It should be understood, however, that the detailed description and the specific examples while indicating embodiments of the invention are given by way of illustration only, since various changes and modifications within the spirit and scope of the invention will become apparent to those skilled in the art from said detailed description.

Brief Description of the Drawings

The present invention will become more fully understood from the detailed description given herein and from the accompanying drawings, which are given by way of illustration only and do not limit the intended scope of the invention.

Figure 1 shows the particle size distribution of soy milk (SM), skim milk (SMP) and a 50:50 mixture of SM and SMP determined by light scattering;

Figure 2 shows acidification as a function of time for gels made with T1, T2, T5, T6, and the mixes of SM/SMP (50/50) with rennet or GDL without CaCl2. Treatment codes are defined in Table 1;

Figure 3 shows averaged storage modulus (G') as a function of pH for gels made with T1, T3, T5, T6, and the mixes of SM/SMP (50/50) with rennet or GDL without $CaCl_2$. Treatment codes are defined in Table 1;

Figure 4 shows the average measurement of storage modulus (G') as a function of time for gels made with T1, T2, T5, T6 and the mixes of SM/SMP (50/50) with rennet and $CaCl_2$. Treatment codes are defined in Table 1;

Figure 5 shows confocal scanning micrographs of soy, milk and mixed soy/milk gels. T1 SMP, 2% protein, rennet; T2 SM, 2% protein, GDL; T3 SMP, 4% protein, GDL; T4 SM, 4% protein, GDL; T5, 50:50 SM:SMP, 4% protein, GDL, rennet; T6 50:50 SM:SMP, 4% protein, GDL. Bars represent 6 μM;

Figure 6 shows syneresis of soy, milk and mixed soy/milk gels. Treatment codes are defined in Table 1;

Figure 7 shows the textural properties of the soy/milk cheese-type product of the invention;

Figure 8 shows SEM imaging of the soy/milk cheese-type product of the invention; and

Figures 9A-9B show various process steps in the making of the soy/milk cheese-type product.. Figure 9A shows mixture of co-gelled soy and milk; Figure 9B

shows the curd appearing separated from the whey after 30 minutes; Figure 9C shows curd poured into molds; Figure 9D shows curd incubated overnight at 30°C under gravity; Figure 9E shows soy/milk cheese-type product sample; Figure 9F shows the soy/milk cheese-type product salted; Figure 9G shows the salted product brined; and Figure 9H shows the soy/milk cheese-type product after two weeks.

Detailed Description of the Invention

Broadly stated, the invention is a novel soy/milk gel that can be further treated to provide novel and desirable soy/milk cheese-type products and novel and desirable soy/milk yoghurt-type products.

The present invention in an embodiment provides a novel and desirable soy/milk cheese-type product that is similar to conventional milk based soft ripened natural cheeses with respect to taste and physical characteristics and yet provides additional health benefits such as reduced cholesterol and containing beneficial isoflavones. The soy/milk cheese-like product is a curd that can be used as a basis for a variety of soft ripen cheese products. It is believed to be useful for the manufacture of cheeses that are designated as "Soft" according to the CODEX General Standard for Cheese (A6) Firmness Designators. These include, for example but are not limited to, feta, cream cheese, fresh fermented cheeses, and surface ripened varieties such as brie and camembert.

The invention also encompasses a novel method for making a soy/milk cheese-type product having similar physical characteristics to natural milk cheeses, but with novel taste profiles and a different protein composition. The novel method is based on creation of an interacting gel by virtue of having two gel forming processes (acidification of soy protein and renneting of casein) occurring simultaneously. This results in a novel soy/milk cheese-type product having rheological properties and desired gel microstructure and therefore being in the same product category as conventional type cheeses.

Generally, the method comprises forming a gel from mixtures of heated soy milk (SM) and cold reconstituted skimmed milk (SMP). This is accomplished by adding heated soy milk to cold renneted milk and acidifying. In one aspect of the method, hot soy milk is added to cold renneted milk to which an acidifying agent is added (renneted/acidified milk). Gelling via acidification will not take place until mixing with the hot soy milk. The cold renneted/acidified milk does not gel until the

hot soy milk is added thereto. In another aspect of the method, the acidification is done by adding an acidifying agent to the mixture of the hot milk and cold renneted milk. Still in another aspect, the acidification can occur by directly acidifying the hot soy milk via acid fermentation, by addition of calcium and/or magnesium, or by addition of citric, lactic acid or GdL.

Acidification with the use of lactic culture to the cold renneted milk as the acidifying agent occurs as the temperature of the mixture warms as the lactic culture will grow in warmer temperatures only, reaches to about 40°C or less. Mixing the hot soy milk with cold renneted/acidified (i.e. cultured) milk brings the mixture to a temperature that affects the gelation process of both the soy milk and the renneted acidified milk, causing both to occur simultaneously and to interact to form a mixed gelled network of the two proteins, and a gelled slurry. Culture then occurs with the warmer temperature of the gel. To aid in the gelation of the soy protein or the milk protein a firming agent can be utilized while stirring is maintained. This gelled slurry is then allowed to set to form a curd which is poured without breaking into a cheese mold and incubated overnight at suitable temperatures, depending on the starter culture used. The curd may then be pressed and/or dry salted by rubbing all sides of the curd surface with dry salt, to allow for some syneresis to occur while refrigerated. The curd is turned a few times. After a couple of days the salted curd may be immersed in a brine comprising salt and stored at suitable cool temperatures of about 4°C.

It is believed that gelation of both principal soy globulins, β-conglycinin and glycinin is induced by the addition of the cool renneted/cultured milk (but not yet coagulated) to the hot soy milk. During cooling, soy proteins rearrange mainly through non-covalent interactions, causing stiffening of the gel network. Gelation of heated soy milk can be effected by quiescent acidification via acid fermentation or addition of glucono-delta-lactone which slowly converts to gluconic acid when dissolved in an aqueous medium, or by addition of ions such as magnesium or calcium. The gelation of soy proteins occurs because of charge neutralization, and bridging by cations present in the serum phase. During acidification from neutral pH, coagulation begins at about pH 6.2. The principal milk proteins, caseins, can be coagulated by acidification to pH less than about 5.0 or at higher pH values (lower acidity) via enzymatic coagulation, namely, renneting. Soy-dairy mixed gels with differing functionalities can be created by combining coagulation (i.e. gelation) of soy

proteins in the pH range of about 5.2-6.4 and rennet coagulation of caseins. These gelation processes are made to occur simultaneously in the mixed gels and without being bound to theory, three gel structures are possible: (1) a gel structure formed predominately of soy proteins with coagulated caseins as inert (not interacting with the soy protein) particles within the soy gel matrix; (2) a gel structure formed predominately of renneted caseins with particles of acid coagulated soy proteins as inert particles within the milk gel matrix; or (3) a gel structure formed with interacting soy and dairy proteins.

In further embodiments of the invention, the soy/milk gel made from mixtures of heated soy milk (SM) and cold reconstituted skimmed milk (SMP) can be processed in a manner to provide a yoghurt-type product. In this aspect (see example one for a non-limiting example) the gel is not subjected to syneresis or minimally subjected to syneresis such that a high water holding capacity is provided. In this manner, novel soy dairy products can be made that are comparable to milk yoghurt products in texture, and yet have the benefits of soy.

The soy milk can be purchased or made from dry soybeans. The soy milk is typicaly filtered to eliminate fiber material. A soy protein extract as a base for the process may also be made from mixing soy flour (dehulled soy flour or defatted soy flour), soy powder, soybean flakes, soy concentrate, and/or soy protein isolate with water. In general, any source of soy protein can be used in the present invention as would be understood by one of skill in the art. The soy milk may have a concentration of up to about 10% protein and in aspects about 3-6% protein. If soybeans are used as starting material, then the soy milk should be heated to a high enough temperature and for a sufficient time to denature any anti-nutritional compounds (such as trypsin inhibitors). If soy protein suspensions are to be prepared, then heating is desired to solubilise the proteins from the powder. Suitable temperatures are about 60°C to about 95°C for up to about 10 minutes. One of skill in the art would recognize suitable temperatures and times. The heated soy milk is then prepared and ready to add to the milk.

The milk used in the present invention may comprise from about 0% to about 10% fat and in aspects from about 0.5% to about 5% fat. It may be desirable to use milk with a low fat content and optionally add fat from other sources. In the present invention skim milk is used in one aspect to reduce the fat content however, it is encompassed that higher fat milk including homogenized milk can be used as is

desired and understood by one of skill in the art. It is expected that the addition of fat to the mixture may improve the appearance, texture and mouth feel of the cheese curd. Any type of milk that could be used in cheese making can be used as understood by one of skill in the art. The milk used may be from different sources such as for example pasteurized cow's milk, buffalo milk or goat's milk (including mixtures thereof) that is kept refrigerated at about 4°C.

The milk is prepared for adding to the hot soy milk. To cold milk diluted rennet (125µl concentrated Chy-mx Extra rennet Milwaukee, WI U.S.A.) is added and then the mixture stored overnight for the rennet to go to completion. The amount of rennet for use is understood by one of skill in the art. In aspects, the concentration of rennet for use can be about 0.01-0.002IMC/g. In aspects the amount of rennet for use may be about 0.020IMC/g, sufficient for the renneting reaction to reach completion. Indirect acidification (i.e. culturing) of the cold renneted milk is performed microbially by the addition of a starter culture of one or more lactic acid-producing bacteria to the milk, and then allowing the bacteria to grow and multiply (culture) when the mixture is warmed by adding to the hot soy milk. Milk with lactic acid-producing bacteria added thereto is referred to as cultured milk herein. In one aspect of the present method a freeze-dried concentrated lactic cheese culture (Choozit MA 16 LYO, Danisco France) is used at a dosage of about 0.625DCU (0.005%) bacteria per 10kg/milk. One of skill in the art would recognize that a variety of bacteria can be added that impart a desired flavour and other desired character to the final product. For example, lactic acid cultures and suitable adjuncts such as probiotics and flavour enhancing cultures can be used. Probiotic cultures may be selected from the group consisting of *Lactobacillus, Lactococcus, Streptococcus, Bifidobacterium and combinations thereof.* Once renneted and cultured (i.e. acidified), the milk is kept cold until ready for mixing with the hot soy milk. At this point the renneted and cultured cold milk has not coagulated. Alternatively, direct acidification may be used instead of lactic acid bacteria. In this case. citric acid, lactic acid or glucono-delta-lactone (GdL), for example, is added to the warm soy milk/milk mixture.

To effect simultaneous gelation, the cold renneted milk is mixed with the hot soy milk causing the temperature of the soy milk to quickly decrease and the temperature of the milk to quickly increase to less than about 40°C. At this temperature, the lactic acid bacteria are able to grow and thus act to acidify the

mixture. Alternatively, if lactic acid bacteria were not used, direct acidification may be done by adding citric acid, lactic acid, or GdL directly to the warm mixture.

To increase gelation of the soy protein, firming agents may optionally be added to firm the curd. Preferably, calcium chloride is added to help gel and form a curd and can be added in amounts of from about 0% to about 0.5%, in aspects from about 0% to about 0.2%. In aspects, $MgCl_2$ (0.25g/ml) is slowly added while stirring the gelling (coagulating is synonymous) slurry. After stirring, the coagulated mixture is left undisturbed to set for a sufficient time to form a curd and incubated at a certain temperature for sufficient time to develop the required acidity. The quiescent time for curd formation can be up to 60 minutes or so as understood by one of skill in the art. The gelled curd is poured into a mold and incubated at about 30°C or higher, overnight after which dry salting of the curd takes place. The temperature will be the optimal growth temperature for the starter culture employed. The dry salted curd can be partially dried for days and refrigerated. To maintain a soft ripened cheese-type product of soy and milk, the drying curd is not subject to pressure. To form a firmer cheese-type soy/milk product pressure can be applied to remove more moisture from the product as it dries. The salted cheese-type product is then optionally brined and stored.

The invention provides the above and below described methods wherein said soy protein is present in the final soy/milk cheese-type product in amounts of from about 10% to 60% by weight, and preferably from about 15% to about 50%. By "percent" it is meant weight percent based on the calculated amount of casein solids in the milk. Milk is present in amounts of from about 10% to about 90%.

Ingredients may be included in the slurry such as, but are not limited to, non-fat dry milk, a milk protein, an acidity regulator, an acid, an anticaking agent, an antifoaming agent, a coloring agent, an emulsifier, an enzyme preparation, a flavoring agent, a firming agent, a food protein, a gelling agent, a preservative, sequestrants, a stabilizer, a starch, a thickener, an oil, a fat, a cheese powder, a salt, a nutritional supplement, an acid, an enzyme, a neutraceutical, a carbohydrate, a vitamin, a mineral, soluble fiber sources. Examples may further include procream, whey cream, a dairy solid, and foodstuffs of vegetable, fruit and/or animal source. The foodstuffs may include fruit, vegetables, nuts, meat, and spices, among other foodstuffs.

Depending on the character desired in the end soy milk/milk cheese-type product, a sweetener or sweeteners may be added to the gelled curd (i.e. the slurry). Examples of suitable sweeteners include artificial and natural sweeteners such as saccharin, sucrose, fructose, glucose, corn syrup, maltose, honey, glycerin, fructose, aspartame, sucralose, high fructose corn syrup, crystallized fructose, acesulfame potassium, and mixtures thereof. The amount of sweetener used in the acidified compositions will vary depending on the desired taste and the perceived sweetness of the specific sweetener selected.

If desired, bulking agents may be added to the curd to enhance the textural properties. Suitable bulking agents include, but are not limited to, maltodextrin, corn syrup solids, dextrose, lactose, whey solids, and mixtures thereof.

Food starches can also be used in the manufacture of the soy milk/milk cheese-type product of the present invention to aid in water management. In general, starch can be incorporated into the final product in the range of about 0.5-4.0 wt. %.

Suitable starches include, for example, modified and unmodified food starches, corn starch (dent or waxy), rice starch, tapioca, wheat starch, flour, potato starch, native food starches having cross-linked polysaccharide backbones, and mixtures thereof.

A number of different types of generally recognized as safe (GRAS) ingredients can be incorporated into the slurry and optionally added at other stages of the overall manufacturing process as described herein. If added at a stage other than the slurry, most ingredients can generally be added as a powder, coating or as a dressing. The ingredients that are incorporated are selected, for example, to tailor the performance, nutritional, and taste characteristics of the final soft or firm/semi-hard cheese product. Different types of gums or stabilizers can also be incorporated into the cheese. The cellulose can be either natural or modified. One cellulose or combinations of different celluloses can be utilized. Types of celluloses that can be utilized include, but are not limited to, microcrystalline cellulose, powdered cellulose, methylcellulose, propylene glycol alginate, and sodium alginate. Examples of suitable gums that can be incorporated include, but are not limited to, xanthan gum, guar gum, konjac flour and locust bean gum. Examples of suitable stabilizers include chondrus extract (carrageenan), pectin, gelatin, and agar, or the soluble fraction of the soybean polysaccharides. The total amount of gums and stabilizers included in the final cheese product is typically up to about 0.01, about 0.50, or about 3.0% by

weight. More specifically, the amount of gums and/or stabilizers can range from about 0.01 to 3.0%, from about 0.25 to 2.5%, from about 0.5 to 2.0%, or about 0.75-1.5% by weight of the final cheese-type product. Gums and stabilizers concentrations in the slurry are typically in the range of about 0.02-6.0, or 0.50-5.0 wt. %.

Any colorants known in the art, including all certified colorants and natural colorants may be used in the soy milk/milk cheese-type product to impart a cheese color to the compositions. If the end product desired is to be a yellow/orange imitation cheese composition, the preferred colorants are Certified Yellow #5, Certified Yellow #6, annatto, carotenels, or oleoresin paprika. Additionally, it may be desirable to include titanium dioxide in the composition, to increase overall opacity. If desired, preservatives may be included in the acidified food composition to prevent discoloration or decay, and to further ensure avoidance of microbial or fungal spoilage, or other degradation of the composition's components. Such preservatives include, for example, sodium benzoate, potassium sorbate, sorbic acid and EDTA.

In addition to cheese flavorings discussed above, additional flavorings or flavor-enhancing additives may be included in the soy milk/milk cheese-type product, as long as such additions do not substantially alter the character of the product. Such flavorings may include, for example, spices, such as black pepper, white pepper, salt, paprika, garlic powder, onion powder, oregano, thyme, chives, basil, curry, Worcestershire sauce, soy sauce, mustard flower, yeast extracts, cumin and mixtures thereof. Additionally, particulate components such as fruit or vegetable matter, meat, tofu, or nuts may be added. Flavoring agents are typically added in an amount such that the concentration in the final cheese product is within the range of about 0.01 to 5 wt. %. If incorporated into the slurry, the concentration of the flavoring agent in the slurry is generally is in the range of about 0.02 to 5 wt. %.

Salts of various types, but typically sodium chloride, can be added to tailor the flavor of the final cheese. The salt can be incorporated into the final cheese product by including it in the heated slurry or by adding it in granular form or as an unheated solution apart from the slurry. Regardless of how introduced, the salt concentration in the final cheese product is usually added at a level of about 0.1-5 wt. %. When added as an ingredient of the slurry, this means that the salt concentration in the slurry is generally about 0.0 to 25.0 wt. %, for example about 0.5-22%, or about 1-18% by wt.

Neutraceuticals may be included to deliver nutrients not normally present in cheese. Examples of neutraceuticals include, but are not limited to lycopene, antioxidants, probiotics, prebiotics, phosphatidylserine, vegetable sterols, immunoglobulins. These products in particular may be added as part of the slurry or to the final cheese-type product.

We note that the term "gel" and "slurry" are used interchangeably in this description.

Although preferred amounts of the various components of the soy milk/milk cheese-type product have been detailed herein, it will be apparent to one of skill in the art that the amounts of the components can be varied depending on the taste, texture, viscosity, color, and/or other organoleptic properties desired in the final soy/milk cheese-type product of the invention.

Similarly, the soy/milk yoghurt type product of the invention may be varied with respect to the amounts of the components depending on the desired taste, texture, viscosity, color, and/or other organoleptic properties desired in the final soy/milk yoghurt-type product of the invention. The soy/milk type product of the invention can also incorporate any or all of the other components as described herein for soy/milk cheese-type products such as one or more of nonfat dry milk, a milk protein, an acidity regulator, an acid, an anticaking agent, an antifoaming agent, a coloring agent, an emulsifier, an enzyme preparation, a flavoring agent, a firming agent, a food protein, a gelling agent, a preservative, sequestrants, a stabilizer, a starch, a thickener, an oil, a fat, flavour powders, a salt, a nutritional supplement, an acid, an enzyme, a neutraceutical, a carbohydrate, a vitamin, a mineral, soluble fiber, fruit, vegetables, nuts, meat, spices, and other foodstuffs.

The above disclosure generally describes the present invention. A more complete understanding can be obtained by reference to the following specific Examples. These Examples are described solely for purposes of illustration and are not intended to limit the scope of the invention. Changes in form and substitution of equivalents are contemplated as circumstances may suggest or render expedient. Although specific terms have been employed herein, such terms are intended in a descriptive sense and not for purposes of limitation.

Examples

Example One: Production and Characterization of Soy/Milk Gels

Table 1 summarizes the various treatments used in the study. The protein content of the soymilk (SM) and milk (from reconstituted skim milk powder, SMP) mixes was kept constant at 4%, and controls containing only 2% of skim milk proteins or soymilk proteins were also used. The mixes were aggregated by a combination of rennet and acidification (using GDL). $CaCl_2$ was also added to all the samples.

Table 1

Treatment	4%SM (ml)	4%SMP (ml)	Distilled Water (mL)	GDL (g)	Rennet (µl)
T1	0	12.5	12.5	0	200
T2	12.5	0	12.5	0.25	0
T3	0	25	0	0	200
T4	25	0	0	0.25	0
T5	12.5	12.5	0	0.25	200
T6	12.5	12.5	0	0.25	0
T7	17.5	7.5	0	0.25	200
T8	22.5	2.5	0	0.25	200

Note:
4%SM is the soymilk(SM) containing 4% soy protein
4%SMP is the skim milk powder (SMP) solution containing 4% milk protein
GDL is Glucono delta-lactone at a concentration of 1.0% (w/v)
Rennet concentration was 0.001% (v/v).
All treatments included $CaCl_2$ at concentration in the final mix of 2mM.

Soymilk Preparation

Soymilk was prepared according to the procedure of Mullin et al. (2001) with slight modifications. Soybeans (Harovinton variety, grown at the Agriculture and Agri-Food Canada Harrow research station, Harrow ON) were weighed (100 g) and soaked in excess water overnight at room temperature, drained and rinsed with cold water and drained again, then reweighed to determine the amount of water absorbed by the beans. The water uptake was calculated by dividing the weight of the soaked beans by the initial weight of the dry beans. The amount of additional water needed to obtain a ratio of 18:1 water to protein was then calculated by subtracting the amount of absorbed water.

Approximately half of additional water needed was then added to the beans at 20°C and blended (commercial blender, WARING, New Hartford, CT) at high speed for 3 min. The remaining water was heated to 60°C and added to the slurry for better

protein extraction, and the whole mixture was blended at high speed for another 30 s. A two-step filtration was then carried out to remove the coarse material (okara, which is mainly composed of fiber material). The slurry was filtered through a juice extractor (Juiceman, professional series 211, Korea) and the okara was collected and passed through the juice extractor again. The soymilk obtained from the juice extractor was filtered through cheese cloth to remove fines (Mullin et al., 2001). A portion of raw soymilk was then divided in test tubes (10 ml each tube) and heated in boiling water (90-100°C) for 7 min, following a previously published procedure (Ono et al., 1991) and cooled to room temperature in an ice-water bath. The heated soymilk was then centrifuged at 10,000g for 30 min at 20 °C in a refrigerated ultracentrifuge (Optima LE-80K Beckman Coulter, CA, USA) to eliminate any additional large particles. The protein content of collected supernatants was measured using Dumas method (LECO, FP-528, Mississauga, ON, Canada) using EDTA as standard for calibration of the instrument. The protein concentration was calculated using 6.25 as a conversion factor.

Low heat skim milk powder, purchased from Dairy Farmers of America (Kansas City, MO), was used for the study. Skim milk powder was suspended (12% solid total solids w/v) in high-purity water containing 0.02% sodium azide (to avoid microbial growth), stirred for 2 h, and incubated overnight at 4°C to ensure complete hydration.

Particle Size Analysis: Mastersizer 2000 (Malvern Instruments Ltd, UK) was used to determine the protein particle sizes of 2% soymilk, 2% skim milk powder solution and the mixes of 2% soymilk and 2% skim milk powder solution. The values of refractive index used were 1.39 for skim milk particles, 1.46 for soymilk and 1.42 for the mixes of soymilk and skim milk powder solution.

Figure 1 illustrates the particle size distribution of various samples of soymilk (SM), reconstituted skim milk (SMP) and a 50:50 (v/v) mix. All samples showed a monomodal size distribution with most particles in the range between 0.05 μm and 0.3 μm. Soymilk showed a shoulder with particles of larger diameter and a similar particle size distribution was also noted for the 50:50 mixture.

Rheological Measurements: A controlled stress rheometer and Rheology Advanced Data Analysis software version 5.0.38, both from TA instruments Ltd., New Castle, Canada, were used to collect and analyze the experimental data. A conical concentric cylinder geometry (20 ml sample size, 5920 um fixed gap, 15 mm

radius, 14 mm rotor outer radius and 42 mm cylinder immersed height) was used to measure time sweeps and frequency sweeps at a constant temperature of 30°C, controlled by a temperature-controlled water bath. A 20 mL sample was loaded into the rheometer.

A water trap was used to minimize evaporation during the measurement. Time sweep measurements were carried out with a constant maximum strain of 0.01% and a frequency of 0.1 Hz. After four hours, a frequency sweep test was performed applying a constant stress of I Pa in the frequency range from 10- 0.005 Hz.

Dynamic rheological measurements provide information on the viscoelastic nature of food materials. Dynamic rheological tests can be used to study the characteristics of the gel as well as of gelation (solution-gel) and melting (gel-solution transition). From dynamic rheological tests the elastic modulus (G'), the viscous modulus (G"), and tan δ = (G'/G″ where δ is the phase angle) were obtained (Rao, 1992). Three types of dynamic tests can be conducted to obtain useful properties of gels and gel formation: a) Frequency sweep tests in which G' and G" are determined as a function of frequency at fixed temperatures. (b) Temperature sweep tests in which G' and G" are determined as a function of temperature at fixed ω. (3) Time sweep tests in which G' and G" are determined as a function of time at fixed ω and temperature (Rao and Steffe, 1992). Figure 3 illustrates the time sweep test carried out on the mixture of soy protein and milk protein,

When soy protein and milk protein were combined together, after acidification the mixes showed a faster onset of gelation than control samples containing only casein micelles (Figure 3). Moreover, when rennet was added into the mixes, it greatly affected the G' value. Compare T5 to T6. This suggests that GdL was a prerequisite for onset of the gelation of the mixes (Figure 2), and that renneting is needed to increase gel firmness, and to make sure caseins contribute to the gel network.

Figure 4 depicts the development of the elastic modulus (G') at 30°C versus time for different mixtures treated by GdL and rennet as well as the corresponding control samples. The G' used in the discussion refers to the final G' achieved after 11000s of incubation, and gelation time was reported as the time at which G'>1 Pa. The G' versus time curves of T5 is different from T6 and the others. That means gelation was affected by the presence of rennet. But the mixes of SM/SMP (50/50) did not gel during rennet in the absence of GdL, possibly because the presence of

soy protein disrupted the gelation of milk protein. Compared to T5, T6 and T2, T1 had less G', which means that soy protein can form stronger gels than milk protein. Statistical analysis demonstrated that the final G' value of the SM/SMP mixtures with addition of rennet was significantly different from that of the mixtures without rennet. In particular, note that the soy-milk mixtures gelled with GdL+Rennet (T5) had a greater final G' (firmer gel) at 4000 s than the same mixture gelled with only GdL (Treatment 6). This suggests that renneted caseins are contributing to the structure of mixed gels more than non-renneted caseins. This was confirmed by confocal microscopy.

Confocal scanning laser microscopy: Confocal scanning laser microscopy (CSLM) measurements of soymilk, skim milk, and soymilk/skim milk mixture gels were performed on a Leica TCS SP Confocal Scanning Light Microscope (Leica, Heidelberg, Germany), in single photon mode, configured with an inverted microscope (model Leica DM IRBE), and using an Ar/Kr laser. Slices of approximately 0.2–0.5 cm thick were cut from the cylindrical shaped gels and the protein was labeled with two drops of a 0.1% aqueous solution of fluorescein isothiocyanate (FITC). The labeled slices were incubated at ambient temperature for 30 min to allow the dye to diffuse uniformly throughout the sample volume before direct microscopic observation. The light wavelength used to visualize the dye labeled sample was 488 nm. The emission maximum of the dye was 518 nm. The following Leica objective lenses were used: 20×/0.7NA/dry/HC PL APO, 63×/UV/1.25NA/water immersion/PL APO. In addition to 2D images, 3D image stacks were recorded and presented in 2D projections of the sample volume.

In a confocal laser scanning microscope (CLSM) a beam of light is focused on a small portion of the specimen, and a confocal point detector is used to recollect the signal from the sample. In-focus plane images are obtained and the out-of-focus regions appear as black background (Brakenhoff et al., 1988). It is possible to distinguish the spatial distribution of the components present in a sample by using fluorescent labeling dyes, such as FITC or rodamine B for protein, Bodipy or Nile red for lipids, and conjugates of lectins for polysaccharides. Confocal microscopy has several advantages: it can work in two modes (fluorescence and reflectance), it has the ability to scan samples at different depths; it is possible to obtain 3-D images without damage to the sample, high resolution images can be obtained, and it does not require major sample preparation (Vodovotz, 1996). Confocal microscopy is

useful tool in the study of physical aggregation and phase separation, and to identify, albeit at times qualitatively effects of processing conditions and ingredient variation on the microstructure of gel with much less sample manipulation, at least compared to other conventional microscopy measurements (Vodovotz, 1996).

Confocal images in Figure 5 show that SM coagulated with GdL (T1) forms larger strands than rennet coagulated SMP (T2). Figure 5 also shows that increased protein concentration creates larger pores in soy gels formed with GdL and smaller pores in renneted skim milk proteins. Figure 5 clearly shows that soy-dairy mixtures gelled with rennet and GdL have a much finer network structure (smaller pores) than mixed gels formed with only GdL. The network formed by the mixes with rennet during acidification (see T5 in Figure 5) contained smaller pores, larger aggregates and denser clusters of protein than that of mixed gels without rennet during acidification (see T6 in Figure 5).

SEM images (not shown here) confirm that the protein strands forming the gel structure in mixed gels formed with both GdL and rennet are thicker and appear more dense than in mixed gels formed with only rennet, suggesting that renneted caseins and soy proteins are interacting to form mixed strands of protein, which further interact to form the gel structure. In other words, two distinct types of gels can be formed with soy-dairy protein blends with a final pH in the range of 5.2 – 5.4 (note this is the pH of many rennet coagulated cheese varieties). First, using only GdL a gel based mainly on acid coagulated soy proteins is formed. In this case, the caseins apparently contribute little to gel structure. Second, using both GdL and rennet a gel is formed where rennet destabilized caseins interact with acid destabilized soy proteins and actively participate in gel formation.

<u>Syneresis tests on the formed gels:</u> Mixes were incubated in water baths at 30°C for 1h, and then the gel formed was placed on a plastic net and drained onto a balance to measure the amount of whey released over time. The whole system was placed into an environmental chamber at 0~4°C in order to control evaporation. The water weight excluded from the gel measured by the balance was recorded.

Factors such as pH, ionic strength, protein concentration, and temperature history and time influence the microstructure of protein gels (Kinsella 1982; Offer and Trinick 1983; Schnepf 1989; Hermansson 1986 and 1994; Damodaran 1996). During gelation a 3-dimensional network stabilizes water physically and chemically within the gel structure. So, protein–protein interactions are necessary to form the gel and

stabilize water. However, stronger protein-protein interactions can also lead to thicker protein strands and larger pores in which the water is less firmly held and more easily pressed out. A more open structure with larger water pores has lower water holding capacity than a dense network structure (Stanley and Yada 1992). A gel will develop a dense network structure if protein–protein interaction is uniform throughout the gel network (Hermansson 1986, 1988; Niwa 1986). The extent of syneresis (water released from the gel) due to temperature changes or physical disruption of the gel can be predicted from the gel structure such as the size of water pores and the integrity of the gel network. Syneresis is desirable or undesirable depending on the further processing and the desired type of final product. For example, in a soy-dairy yoghurt type product, high water holding capacity is desirable. This would decrease the amount of stabilizers needed. However, if desired to make cheese like products, syneresis is desirable, as some whey needs to be released before the curd is manipulated.

Figure 7 shows syneresis of soy, milk and mixed soy/milk gels. Treatment codes are defined in Table 1. Mixes including coagulants were incubated at 30°C for 60 min. The resulting gels were placed on a plastic net at 4°C and the whey released was weighed at 10 min intervals for 3 hours. Note results are not normalized for protein concentration, so treatments T1 and T2 which contain only 2% protein are valid comparators for each other, but not for the other treatments which contain 4% protein. Note also that there is missing data for T8; however, the available data confirms the trend that illustrated by T5, T6, T7 and T8 that syneresis of mixed soy-dairy gels improves with increasing amounts of renneted casein.

These observations suggest that the mixed gels with both GdL and rennet may hold more water than mixed gels with GdL because they have smaller pore sizes and apparently stronger strands forming the gel matrix. Preliminary results suggest the opposite is true. Note that although soy gels are much firmer than rennet SMP gels, rennet gels had much greater syneresis. This is seen when comparing T2 versus T1 and T4 versus T3 in Figure 4. In mixed gels, renneted caseins improved the rate and extent of syneresis relative to mixed gels formed with GDL only. Higher amounts of soy protein relative to skim milk proteins in the mixes reduced the amount of syneresis (compare T5, T6, T7 and T8). Note that the syneresis versus time curve for the 50:50 soy-dairy mixture coagulated with GDL and rennet (T5, total

protein 4%) is almost identical to the syneresis curve for renneted SMP (T3, protein 4%).

Example Two: Preparation and Characterization of Soy/Milk Cheese-type Product (Curd)

Food grade soybeans were obtained from a local grocery store (30 kg bags). Pasteurized skim milk was obtained from a local supplier (Crown's Dairy, Agropur division) and stored in fridge (±4°C). Rennet (125µl) concentrated Chy-max Extra rennet (Chr. Hansen. Inc., Milwaukee, WI, U.S.A) was diluted in 10 ml ultrapure water, and then added into 5 kg skim milk at 4°C. The milk containing rennet was stored in fridge overnight. The concentration of rennet was 0.020IMCU/g. A freeze-dried concentrated lactic cheese culture(Choozit MA 16 LYO,Danisco, France) was used. The dosage was 0.625DCU (0.005%) bacteria per 10kg milk.

Soy/milk Cheese-type product making and Storage of the Curd:

2 kg dry soybeans were soaked in 5 kg of deionized water overnight at room temperature, drained and rinsed once with water. The weight of soaked soybeans was 4.75 kg. Additional water (11.25 kg) was added to the soaked soybeans, and the mixture was processed with a Stephan Microcut MC-15 (Hameln, Germany) using 0.05 mm cutting ring for 4 times. The soybean slurry was filtered using a 5-speed juice extractor (Breville Ikon, Australia) at speed 3. The okara (filtered fiber material) was collected and passed through the juice extractor again. Soymilk is filtered through cloth fabric to remove fines, and heated to 95°C with stirring in jacketed pot. The temperature was held for 5 min.

The milk was stored overnight with rennet added, so that the rennet would act on the proteins, without coagulation. The culture was then added into cold renneted milk and mixed for 2 min. At this point, the milk and soymilk were mixed together. The hot soymilk at about 85°C was added into cold milk at about 6°C, and the mixture temperature reached very quickly 38°C. To aid in the gelation of soy protein, $MgCl_2$ (0.25g/ml) was added as slowly as possible while manually stirring, and the coagulated mixture was left undisturbed to set for 30 min. The curd obtained was poured into cheese molds and incubated at 30°C overnight. The next day, dry salt (3% of the total wet weight) was added to the curd, by rubbing it on all sides of the curd surface. The cheese was placed in plastic tubs with the lids partially open to allow some drying off of the cheese, and stored in fridge for two days. There was no

pressure applied to the molds and the curd was turned a few times. After 2 days, the salted cheese was immersed into a brine composed of 8% salt, 0.5% $CaCl_2$, and 0.9% vinegar, pH=4.6, and stored at 4°C.

Characterization of the soy/milk cheese curd, chemical analysis, texture and microstructure: The pH of cheese was determined using a portable digital pH meter (pHTestr.20, Eutech Instruments) by inserting the probe into a block of cheese and penetrating to a depth of 2 cm. The protein content in soymilk, milk and soy cheese was measured by Dumas method using Nitrogen Analyzer (LECO, FP-528, Mississauga, On, Canada). About 0.2 g ground cheese samples was collected from the centre of cheese. Protein values of soymilk were calculated by multiplying the nitrogen content by 6.25, and for milk by 6.38 (for the cheese, 6.25). Total solids were estimated using the vacuum oven drying method. About 3 g of ground curd or cheese was placed into aluminum tins, and dried with vacuum oven at 50°C for 18 h. After cooling for 30 min in a desiccator at room temperature, the weight was recorded.

As skim milk was used for the preparation, fat content was not measured. The textural properties of the cheese-product were measured using a TA.XT2 Texture Analyzer (Texture Technologies Corp., UK, Model TA.XT2, version 05.16) of Stable micro System equipped with a cylindrical probe (25mm in diameter) with a 5 kg load cell. A texture profile analysis was carried out, using a pre-test Speed of 2.0mm/s, a test speed of 2.0mm/s, a post-test speed: 2.0mm/s and a distance of 6mm. The time was 3 s and the data acquisition rate: 200pps.

The Texture Analyzer was calibrated before testing. The test protocol was summarized as follows: texture analysis is carried out at ambient temperature on cylindrical cheese blocks with 125 mm in diameter and 30 mm in height, immediately after removal from refrigerator at 4°C. Samples are compressed axially in two consecutive cycles without yield, with 20% deformation (6mm) from the initial sample's height. Each sample was analyzed three times. Mean and standard deviations were reported.

Microstructural analysis was carried out by preparing $3mm^3$ cheese samples, taken from with the cheese block, and mounted vertically on each of the copper holders designed for the Emitech 1250X cryo- preparation unit (Ashford, Kent, UK). Tissue-Tek®, a cryo- mounting gel, was used to ensure that the samples were affixed to the holder. The copper holders were plunged into liquid nitrogen slush (-

207 ^{0}C) which was prepared by pulling a vacuum on the liquid nitrogen. Liquid nitrogen slush provides a faster freezing rate to minimize ice crystals which result in less distortion of the sample. The copper holders are withdrawn from the freezing chamber through argon to prevent frost forming on the surface of the samples. Samples are transferred frozen and under vacuum into the preparation chamber of the cryo unit where the frozen cheese is fractured. Samples were fractured by pre-cooled razor blade, thus provided a better surface for sublimation. Samples were sublimated for 1 hour at -80^{0}C. After sublimation completed, samples were coated with 30nm of gold. The thin coat of the high atomic number element provides conductivity to prevent the sample from absorbing the electron beam and also results in more secondary electrons being created, which are the primary signal for SEM imaging. Samples were transferred, frozen and under vacuum, into the SEM (Hitachi S-570) cryo-stage for observation at 10KV accelerating voltage. The images were captured digitally using Quartz PCI imaging software (Quartz Imaging Corp. Vancouver, BC).

Soy/milk cheese-type product composition:

Table 2. Compositional and physicochemical properties of soy/milk cheese.

Composition/property	Soy cheese
Protein (%)	16.0
Total solid (%)	30.2
Fat (%)	Less than 1%
pH	4.4

Texture Analysis:

Hardness is the peak force of the first curve.
Springiness is a ratio of the two peak force.
Cohesiveness is a ratio of the total areas under the two curves.
Chewiness is the product of **Hardness*Cohesiveness*Springiness**.

	Force	Co-efficiency of variation (%)
Hardness	2.88kg	3.7
Springiness	90.8%	1.7
Cohesiveness	83.3%	0.4

Chewiness	2.18kg	2.6

Example Three: Generation of mixed soy-dairy gels using soy milk and making of yoghurt.

Dairy yogurt consumption has been steadily increasing over the years as consumers are increasingly searching for new healthy snack options with high protein and low fat contents. Thus it is now possible to generate novel yogurt products. Such yogurts deliver the health benefits of both dairy products (high calcium content, high protein quality and soy products (isoflavones) with high protein quality. In addition to the individual benefits of dairy and soy, the addition of skim milk powder to soy yoghurts enhances isoflavone glycoside transformation to a biologically active form during yogurt storage. Dual gelation as herein described allows for selective gelation of the proteins for improved understanding of the participation or interference of soy and milk proteins during mixed gelation.

Soymilk preparation. Soymilk (5% soy protein) was prepared according to the procedure of Malaki Nik, *et al.*, {{88 Malaki Nik, A. 2010}} with slight modifications. In brief, Harovinton soybeans were soaked overnight in milli Q water for hydration. The hydrated soybeans were blended (Osterizer BLSTMG-WOO-033, Oster®) with a measured amount of water at room temperature (calculated to obtain the desired protein content) before being passed through a kitchen juicer (Professional Series 211, The Juiceman®) to further liquefy the sample. The soymilk was then passed through a cheesecloth to remove the okara (mainly composed of insoluble fibre material) and heated at 95°C for 7 minutes before cooling it in ice and storing in a refrigerator at 4°C until use. The soymilk was then used as is, without further centrifugation. Soy serum was prepared by first removing large particles by centrifugation (Optima™ LE-80K, Beckman Coulter) of the soymilk for 30 min at 20°C and at 7980 g. Next, the soymilk was transferred to Macrosep Centrifugal Devices (10 kDa molecular weight cut-off) from Pall Corporation and centrifuged for two hours at 5000 g and 10°C. Following centrifugation, soy serum was poured out from the filtrate receivers and kept in the refrigerator (4°C) until further use, within 5 days.

Skim milk preparation. Fresh milk was collected from the Elora dairy research station of the University of Guelph. Sodium azide was added at a concentration of 0.02% (w/v) to prevent bacterial growth. Milk was centrifuged at 6000 g for 20 min at 4 °C

using a Beckman J2-21 centrifuge and JA-10 rotor (Beckman Coulter, Mississauga, ON, Canada). Milk was then filtered four times through Whatman glass fiber filters (Fisher Scientific, Whitby, ON, Canada) before being subjected to ultrafiltration (PLGC 10k regenerated cellulose cartridge, Millipore Corp., Bedford, MA). During ultrafiltration, both the milk permeate (devoid of protein) and the retentate (concentrated milk containing all the proteins) were collected. Ultrafiltration was continued until a protein concentration of 4% was reached, as determined by the volume of permeate removed. The skim milk was stored in the refrigerator at 4°C until use.

Protein determination. Protein contents of skim milk and soymilk were analyzed using the DC protein assay kit (BIO RAD).

Soy milk characterization. Mineral content of soymilk serum was determined using atomic absorption spectroscopy and the serum was found to contain the following: 80 µg calcium, 190 µg magnesium, 200 µg phosphorus, 1400 µg potassium, <95 µg sodium and 83 µg sulfur.

Gel preparation. Samples were generated by mixing equal volumes of unheated concentrated skim milk (SM, 4% protein) and soymilk (SOY, 5% protein) resulting in a total protein concentration of 4.5%. Calcium chloride (Fisher Scientific, Whitby, ON, Canada) was added to all samples at a concentration of 1mM as reported by Li *et al* {{89 Li,Jie 2006}}. Glucono-delta-lactone (GDL) (Sigma-Aldrich Co., St. Louis, MO, USA) was added at 0.6% at 30°C to slowly reduce the pH from ~6.6 to ~5.5 over the course of the 3 hour experiments. Rennet (Chymax Ultra Rennet (790 IMCU/mL), Chr. Hansen, Milwaukee, WI, USA) was added in concentrations of 0.1074 IMCU/mL (high rennet) as well as 0.0537 IMCU/mL (low rennet) at 30°C. It was anticipated that the interpretation of binary gelation of a mixed system would be very challenging considering the lack of information available and the possible synergistic/competitive effects. Thus, a large number of controls were deemed essential to provide a better understanding of the gelation behaviour of the mixed system. Controls included the mixed system with each of the gelling conditions alone (high rennet alone, low rennet alone or GDL alone). Additionally, every combination of the gelling agents (Table 1) was applied to 4% skim milk, 2% skim milk (diluted 1:1 with soy serum), 5% soymilk and 2.5% soymilk (diluted 1:1 with milk permeate). Gelation experiments were repeated in triplicate if they gelled and in duplicate if they did not gel.

Gelation studies

Each sample for rheology and DWS was prepared in volumes of 35mL and distributed as follows: 1.5mL for light scattering experiment, 20mL for rheology and the remaining amount was used for pH measurement. Rheology, light scattering and pH measurement were carried out simultaneously.

Diffusing Wave Spectroscopy. Diffusing wave spectroscopy (DWS) was employed to measure the temporal fluctuations of light that have been scattered by a system, without the deleterious effect of dilution and in a steady (undisturbed) state. It is based on the measurement of temporal fluctuations of light due to the (Brownian) motion of its scatterers. By careful interpretation of the signal, it can yield information on the dynamic properties of the colloidal system via the diffusion coefficient, which can then be used to calculate the hydrodynamic particle radius with the Stokes-Einstein relation. A more detailed description of DWS theory is found elsewhere {{103 Weitz,D. 1993}}. The light source was a solid diode pumped Nd:YAG laser emitting light with a wavelength of 532 nm and a power of 350mW. For a detailed set-up of the experiment please refer to Alexander *et al.* {{100 Alexander,Marcela 2004}}. All samples except the 2% skim milk were placed into a 5 mm, 1.5 mL glass cuvette and measured at 30°C controlled by an external water bath. The 2% skim milk samples were analyzed in a 10 mm (3 mL) glass cuvette to ensure sufficient multiple scattering. Each treatment was measured in triplicate (i.e., three separate milk or soymilk batches) and analysis was carried out until gelation. In all cases, the light scattering measurements were collected for 2 minutes with intervals of 1 second. Data was analyzed using DWS-Fit software (Mediavention Engineering Inc., Guelph, ON, Canada) and Sigma Plot 10.0 (SPSS Inc., Chicago, IL, USA). The gel point was extrapolated from the plot of increase in radius as a function of pH/time.

Rheology. Experiments were carried out using a controlled stress rheometer at a constant strain of 0.01, a frequency of 0.1 Hz and an initial stress of 6 mPa. The temperature was controlled with an external water bath and kept at 30 °C. Rheological measurements were carried out in triplicate and each experiment was continued for 3 hours. Rheology was not performed on 2% skim milk samples due to the difficulty in obtaining large volumes of soy serum. The gel point was taken as the pH/time at tan δ=1.

pH Measurement. Samples were kept at 30°C in a circulating waterbath during pH measurements. pH measurements were recorded every 11 s into an excel

spreadsheet automatically by AR15 pH recorder software (Mediavention Engineering Inc.) during the course of the 3 hour experiments.

Confocal microscopy of final gels. 20 µL of Rhodamine B (0.2% w/v in milliQ water) was added to 5 mL of sample for staining. Two drops of sample were placed into grooves of a concave microscope slide and a cover slip was placed overtop and sealed. Slides were incubated at 30°C for three hours before analysis. Images were taken using an inverted confocal laser scanning microscope (Leica TCS SP2, model Leica DM IRE2, Leica Microsystems CMS GmbH, Mannheim, Germany) with an Ar/Kr visible light laser, 63x (oil) objective. Experiments were repeated in triplicate.

Gelation Behaviour

Mixtures of soymilk (5% protein) and concentrated dairy milk (4% protein) were prepared in a 1:1 ratio and analyzed by DWS and rheology to investigate the sol-gel transition times and subsequent formation of the gels. While DWS looks at changes and rearrangements happening at the microstructural level, rheology detects the macro-characteristics of a sample. By combining both techniques, along with microscopy, a more complete picture of the gelling behaviour of the samples could be obtained.

All samples were supplemented with 0.1 mM $CaCl_2$ to compensate for the lower calcium content of soymilk as it is known that casein micelles dissociate at low levels of calcium. As mentioned earlier, soy proteins have a higher isoelectric point than milk proteins. Thus, if only acidification is used, soy proteins will aggregate far earlier than milk proteins. For this reason, rennet was added to induce aggregation of casein proteins closer to the gel point of soy proteins. Gelation was induced by additon of 0.6% GDL and two concentrations of rennet. The relatively low concentration of GDL resulted in a gradual decrease in the pH of the sample allowing for more careful observation of the early stages of gelation. Two concentrations of rennet were used (high and low) to examine the effect of modulating the timing of casein aggregation. To distinguish between the activity of rennet and acid, control experiments were conducted wherein GDL and rennet (at both concentrations) were added to the system in isolation.

In addition to observing the activity of each gelation mechanism in isolation, it was also important to observe the behaviour of each protein source in isolation. Thus additional control experiments were conducted to observe gelation of soymilk and skim milk alone to determine the contribution of each protein source to the gelation

behaviour in the mixed system. The actual concentration of soymilk and milk proteins in the mixed system was 2.5 and 2%, respectively. However these individual low protein concentration systems do not accurately represent the actual conditions of the mixed system where the total protein content is higher and proteins are in closer proximity to each other. Thus, all of the controls were measured at high protein concentrations (4% protein skim milk and 5% protein soymilk) and low protein concentrations (2% protein skim milk and 2.5% protein soymilk), reflecting the actual amount of soy and dairy proteins in the mixed system. Control experiments for addition of rennet only (no acidification) to either skim milk or soymilk in isolation were done and the results show an initial casein micelle size of approximately 120 nm radius. As the time after rennet addition progressed, the size of the micelles decreased slightly as the k-casein was cleaved by the action of chymosin. Eventually, the casein micelles were destabilized and coagulation took place. This is perceived as an increase in the radius measured by DWS, changing from about 120 nm to over 3 microns in the span of 10 minutes. Similarly, when the gelation behaviour was followed by rheology the elastic modulus, G', remained low and constant during the initial minutes until the gel point, at which the G' increased rapidly. There was a noticeable difference in coagulation point for the skim milk renneted with the low rennet concentration (~29 min) and high rennet concentration (~18 min) as more enzyme resulted in a higher rate of cleavage taking place. Gelation points were measured by DWS and rheology for all the systems were investigated in this study. There was a slight difference in coagulation time between DWS and rheology. This has been observed before and it is due to the different length scales probed by the two techniques {{98 Holland,Ben 2011}}. While DWS looks at the movement of individual colloids, rheology can only measure the combined and cooperative effect of the colloids in the system. The final G', 180 minutes after rennet addition was approximately 185 Pa for both the high rennet and low rennet samples.

Overall, the results suggest that if rennet were added to a mixed soymilk-dairy milk sample, only the dairy component would be affected by the action of rennet.

Control experiments for addition of only GDL (no renneting) to either skim milk or soymilk in isolation were completed. There was an initial period of invariance in size, until the pH was progressively lowered to near the isoelectric point of soy proteins. At this point, there was sufficient neutralization of surface charges on soy proteins to

allow them to approach each other and begin to aggregate, as expressed by the sudden increase in radius. The gelation pH for the low and high protein samples was around 6.0 and 5.9, respectively. Although the gel points are statistically different, in reality a pH difference of 0.1 would not be considered important. Although the 2.5% and 5% soymilk controls gelled at a similar pH, rheological measurements revealed that the final G' of the 5% soymilk (~130 Pa) was around five time higher than that of the 2.5% soymilk (~25 Pa). This result should be expected as the higher concentration of protein allows for a higher number of bonds to be created between particles, thereby increasing the stiffness of the gel.

When only rennet was added to the mixed system, this sample did not result in any increase in radius during the three hours of observation (figure not shown). It is known from control experiments that soy proteins were not affected by rennet addition. Thus only milk proteins could have been acted upon in this instance. However, the mixed system contained 2% skim milk proteins which, as mentioned before revealed that there was likely insufficient number of milk proteins available to build the gel network. Furthermore, the scattering signal arising from the milk protein component was also mostly overshadowed by the soymilk scattering in DWS.

GDL was observed alone on the mixed soymilk-dairy milk system. From the control samples it is known that skim milk proteins did not aggregate at these levels of GDL and only soy proteins were affected. DWS from this acidified mixed system show the initial radius of this sample was similar to that of soymilk particles alone, around 500 nm. As the pH dropped to pH 6.1, the size of the proteins remained constant. At pH 6.16, there was a clear increase in radius. This gelation point is slightly earlier than that shown by DWS on 2% soymilk alone. However, this discrepancy could be due to the method by which gelling point is calculated in DWS. The extrapolation of a straight line following the radius increase down to the x-axis was difficult to accomplish accurately at the shoulder. Nevertheless, the difference in gelation pH was minimal. The radius continued to increase down to pH 5.6 where there was a change of slope, and a drastic increase in radius. It is worthwhile to point out, that the kinetics of this acidified system, as shown by DWS, differed from that of the soymilk alone, as the shoulder seen in this mixed milk was not present when only soymilk proteins were aggregating. Interestingly, the rheological measurements showed gelation at pH 6.1, which was statistically equal to the gel point of soymilk alone in the control experiments and in agreement with that shown by the shoulder in

DWS. It could be speculated that protein aggregation in this system, as shown by DWS, was manifested as the initial increase in radius at the beginning of the shoulder, but aggregation did not ensue rapidly because of interference from unaggregated milk proteins. Although soy proteins may have begun to aggregate around pH 6.1, rapid and full coagulation may not have taken place until the net charge of the soy proteins had been sufficiently neutralized to overcome the disturbances of the milk proteins, in this case around pH 5.6.
The reason why the rapid increase in radius only occurs at pH 5.6 may be explained by the reduction of net charge in soy particles due to the combined effect of a reduction in pH and calcium release from casein micelles. This would demonstrate a synergistic effect in gelation of the mixed system wherein calcium release from casein micelles accelerates gelation of soy proteins.

The desired system of interest is the mixed soy milk-dairy milk system with added GDL and rennet. DWS plots of the soymilk-skim milk mixture show a dual gelling system. Once more, the initial radius was measured to be around 500 nm which remained constant for the initial pHs. Regardless of whether the high or low rennet concentration was used in combination with GDL, the mixed soy-milk systems showed a drastic increase in radius and gelled around pH 6.0. As explained earlier, the agreement in gel point between samples with the low and high rennet concentrations can be attributed to the excess rennet in solution. From the control experiments, and under the conditions used in this experiment, acidifed soy proteins gelled at a pH 6.0 and 2% milk proteins at a pH of 6.1, however, these were not significantly different. Thus, it is clear that at the gelation point of the mixed system (which is also not significantly different from the control systems just mentioned) both milk and soy proteins participate in a mixed gel network when the system is acidified and renneted simultaneously. Thus, the presence of rennet was effective in making milk proteins available to aggregation and therefore enabled them to participate in network formation rather than to interfere with network formation.

Rheology data also shows the sol-gel transition around a pH of 6.1, in agreement with the DWS data. This gel point is slightly later than the systems with skim milk alone but slightly earlier than that of soymilk. It could be interpreted as a compromise between the two gelling forces.Although the pH of gelation of the mixed system was the same with high and low rennet, the elastic modulus (G') indicates that the gel structures differed. The G' with high rennet and acid was around 86 Pa

whereas with the lower concentration of rennet it was not possible to obtain a consistent (final) G'. This suggests that, although the system contained excess rennet to fully cleave the k-casein in the micelles, a desired concentration of rennet may be required to generate a self-supporting gel structure in the mixed system, possibly due to competing elements or structure formation. Furthermore, if the elastic modulus of the mixed system was compared to the controls, it can be observed that even when both proteins participated in the gel network (4.5% total protein), the gel stiffness (~86 Pa) was still far lower than that of 4% skim milk or 5% soymilk alone (~190 Pa and 130 Pa, respectively). This might be further indication that there may be some antagonistic effects which impede gel stiffening in the mixed system.

Microstructure

Confocal images show that the soymilk gel, produced with GDL, appears as densely packed aggregates of soy proteins. The milk gel, produced with GDL and high rennet, exhibited a very different structure: the milk gel had a network-like appearance with large pores and interconnecting strands. The mixed soymilk-skim milk gels had appearances which were in between, exhibiting a network of strands of aggregated protein. These images indicate that the mixed systems may have microstructures different from those of pure soy gels and pure milk gels. When confocal images of the mixed system with the different gelling agents were compared, no obvious differences were observed between the samples using imaging technology. In general, the structures were more open than those of soymilk alone but more closely packed than those of skim milk alone.

Claims:

1. A soy/milk cheese-type product prepared by a method comprising:

(a) mixing hot soy milk with cold renneted milk;

(b) acidifying and adding a firming agent to said mixture from (a);

(c) mixing the product resulting from (b) for a time sufficient to cool (b) and effect simultaneous gelation of soy milk and milk;

(d) transfer the product resulting from (c) into molds at a temperature of less than about 35°C; and

(e) optionally salting (d).

2. The product of claim 1, wherein said method further comprises subjecting the molded product from (d) to external pressure.

3. The product of claim 1 or 2, wherein said product is further brined.

4. The product of claim 1, 2 or 3, wherein said milk is present in amounts of from about 10% to about 90%.

5. The product of any one of claims 1 to 4, wherein said milk comprises 0% to 10% fat.

6. The product of any one of claims 1 to 5, wherein said firming agent is calcium chloride.

7. The product of claim 6, wherein said firming agent is present in amounts from about 0% to about 0.5%.

8. The product of any one of claims 1 to 7, wherein said milk is renneted using rennet or a synthetic rennet equivalent.

9. The product of any one of claims 1 to 8, wherein acidification is effected by the addition of a lactic bacterial culture.

10. The product of claim 9, wherein said lactic bacterial culture is added to the cold renneted milk prior to step (b).

11. The product of any one of claims 1 to 8, wherein acidification is effected by the addition of GdL, magnesium and/or calcium ions to (a).

12. A method for making a soy/milk cheese-type product, the method comprising:

(a) mixing heated soy milk with cold renneted milk;

(b) acidifying and cooling (a) to effect simultaneous gelation of the soy milk and the milk;

(c) coagulating cooled (b) and setting;

(d) allowing (c) to incubate overnight; and

(e) dry salting (d) to form said cheese-type product.

13. The method of claim 12, wherein the acidifying comprises adding lactic acid, citric acid, or GdL to (a).

14. The method of claim 12, wherein the acidifying comprises adding lactic acid-producing bacteria to the cold renneted milk prior to mixing with the heated soy milk.

15. A method for making a soy/milk gel, the method comprising:

(a) mixing heated soy milk with cold renneted milk;

(b) acidifying and cooling (a) to effect simultaneous gelation of the soy milk and the milk; and

(c) optionally fermenting (b).

16. The method of claim 15, further comprising the step of decreasing syneresis to increase water holding capacity of said gel.

17. A soy/milk yoghurt product made the method of claim 15 or 16.

18. A method for making a soy/milk curd, the method comprising:

(a) mixing heated soy milk with cold renneted milk;

(b) acidifying and cooling (a) to effect simultaneous gelation of the soy milk and the milk;

(c) coagulating cooled (b), and setting; and

(d) allowing (c) to incubate overnight.

19. A soy/milk cheese-type product or a soy/milk yoghurt-type product, said products comprising mixed gels of rennet coagulated casein micelles and acid coagulated soy protein.

20. The products of claim 19, wherein said coagulated soy protein is present as strands of interacting soy protein with said casein.

21. The products of claim 19 or 20, wherein the product is a soy/milk cheese-type product having hardness, springiness, cohesiveness and chewiness similar to milk only soft cheese.

22. The products of claim 19 or 20, wherein said product is a soy/milk yoghurt-type product with a high water holding capacity.

23. The products of any one of claims 19 to 22, wherein said soy protein is present in an amount of about up to 60% of said product.

24. The products of any one of claims 19 to 23, wherein said milk protein is present in an amount of about up to 90% of said product.

25. The products of any one of claims 19 to 24, wherein said product further comprises one or more of nonfat dry milk, a milk protein, an acidity regulator, an acid, an anticaking agent, an antifoaming agent, a coloring agent, an emulsifier, an enzyme preparation, a flavoring agent, a firming agent, a food protein, a gelling agent, a preservative, sequestrants, a stabilizer, a starch, a thickener, an oil, a fat, a cheese powder, a salt, a nutritional supplement, an acid, an enzyme, a neutraceutical, a carbohydrate, a vitamin, a mineral, soluble fiber, fruit, vegetables, nuts, meat, spices, and other foodstuffs.

26. A soy/dairy yoghurt- type product comprising mixed gels of rennet coagulated casein micelles and acid coagulated soy protein.

27. The soy/dairy yoghurt- type product of claim 26, wherein said coagulated soy protein is present as strands of interacting soy protein with said casein.

28. The soy/dairy yoghurt- type product of claim 26 or 27 having less degree of syneresis leading to high water holding capacity similar to yoghurt.

29. The soy/dairy yoghurt- type product of any one of claims 26 to 28, wherein said soy protein is present in an amount of about up to 60% of said product.

30. The soy/dairy yoghurt- type product of any one of claims 26 to 29, wherein said milk protein is present in an amount of about up to 90% of said product.

31. The soy/dairy yoghurt- type product of any one of claims 26 to 30, wherein said product further comprises one or more of nonfat dry milk, a milk protein, an acidity regulator, an acid, an anticaking agent, an antifoaming agent, a coloring agent, an emulsifier, an enzyme preparation, a flavoring agent, a firming agent, a food protein, a gelling agent, a preservative, sequestrants, a stabilizer, a starch, a thickener, an oil, a fat, a cheese powder, a salt, a nutritional supplement, an acid, an enzyme, a neutraceutical, a carbohydrate, a vitamin, a mineral, soluble fiber, fruit, vegetables, nuts, meat, spices, and other foodstuffs.

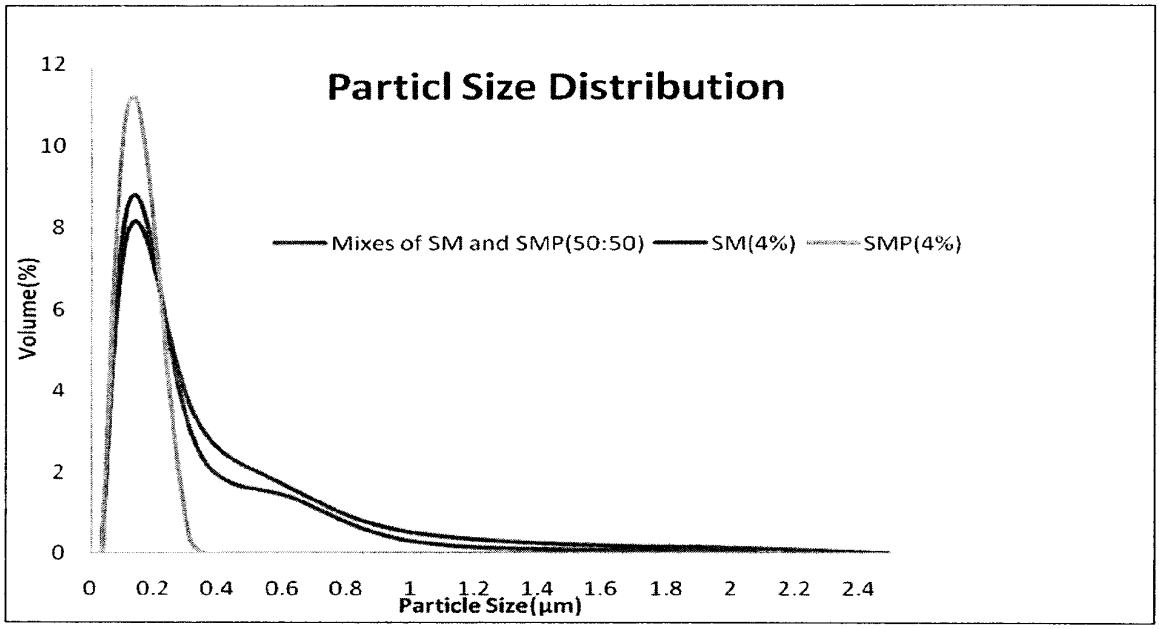
Particl Size Distribution
Mixes of SM and SMP(50:50)
SM(4%)
SMP(4%)
Volume(%)
Particle Size(µm)
0
2
4
6
8
10
12
0
0.2
0.4
0.6
0.8
1
1.2
1.4
1.6
1.8
2
2.2
2.4

Figure 1

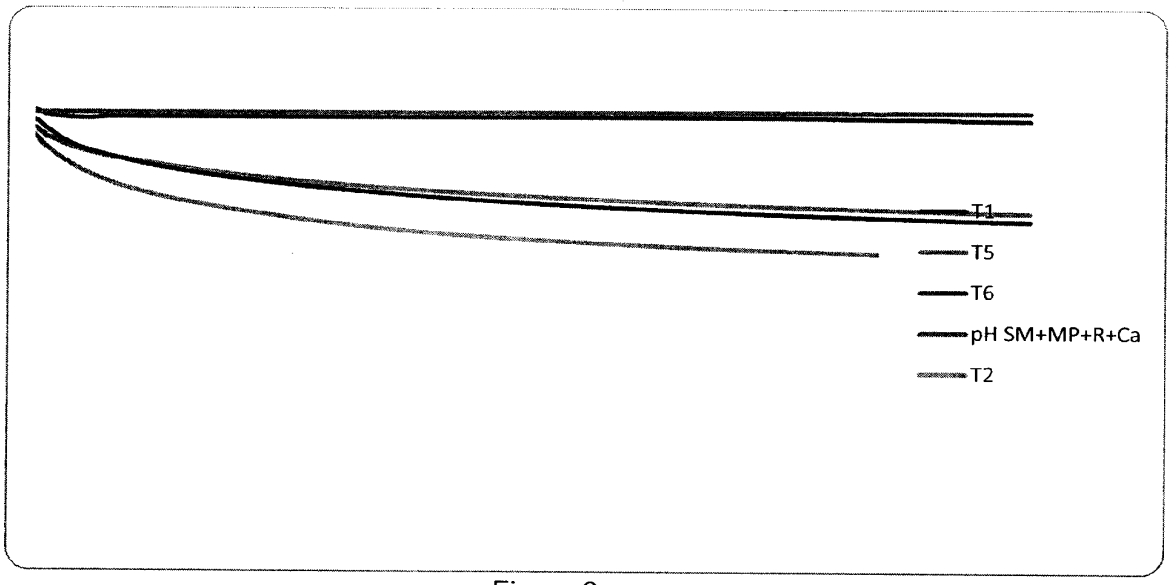

Figure 2

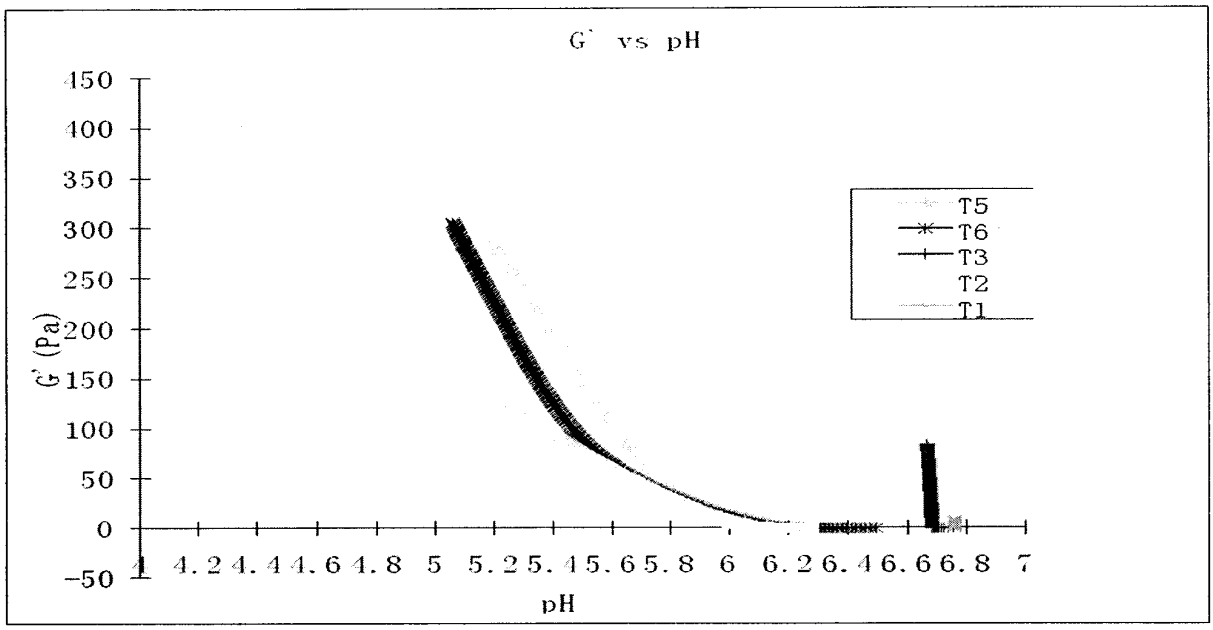
G` vs pH
450
400
350
300
250
200
150
100
50
0
-50
G' (Pa)
4 4.2 4.4 4.6 4.8 5 5.2 5.4 5.6 5.8 6 6.2 6.4 6.6 6.8 7
pH
T5
T6
T3
T2
T1

Figure 3

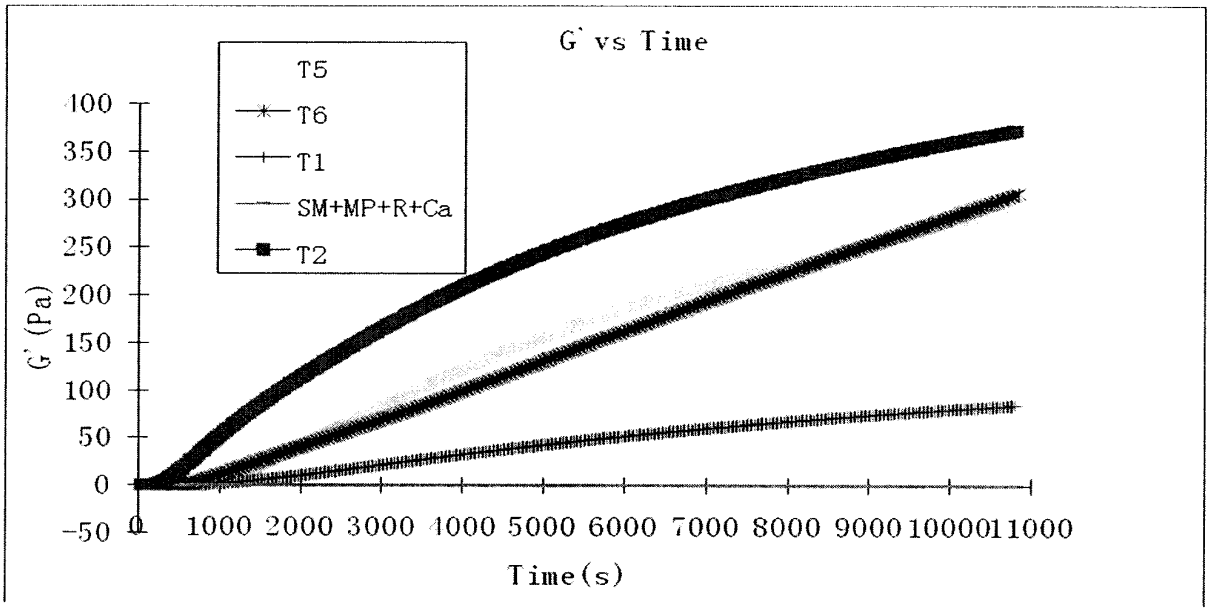
G` vs Time
T5
T6
T1
SM+MP+R+Ca
T2
G`(Pa)
400
350
300
250
200
150
100
50
0
-50
0
1000 2000 3000 4000 5000 6000 7000 8000 9000 10000 11000
Time(s)

Figure 4

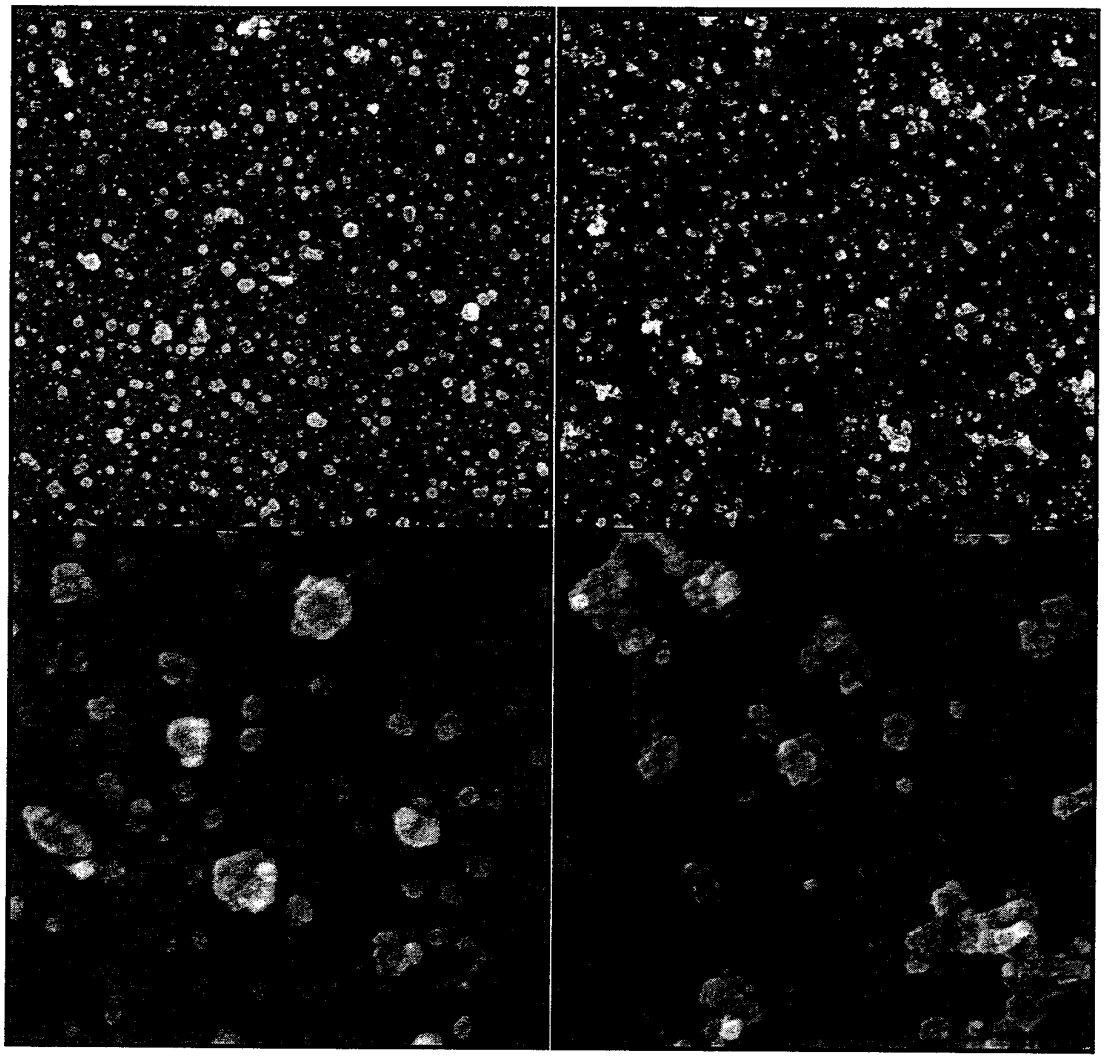

Figure 5

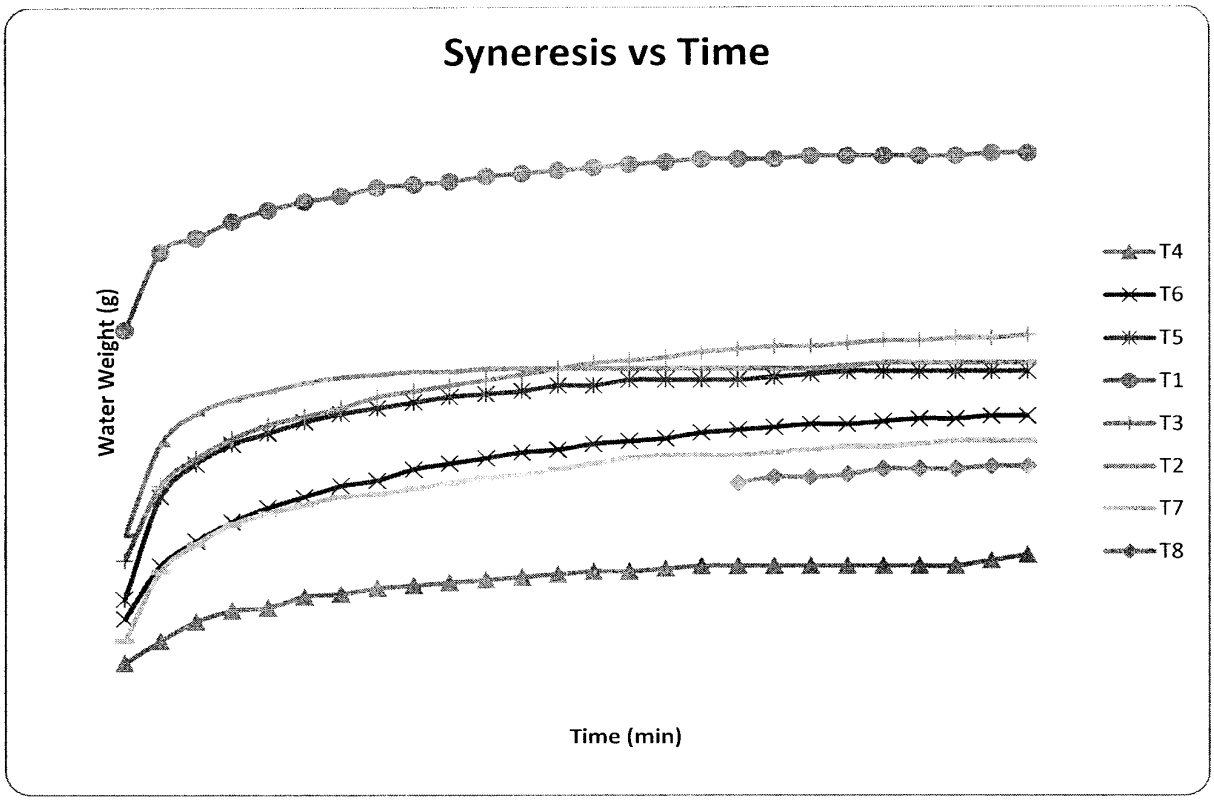
Syneresis vs Time
Water Weight (g)
Time (min)
T4
T6
T5
T1
T3
T2
T7
T8

Figure 6

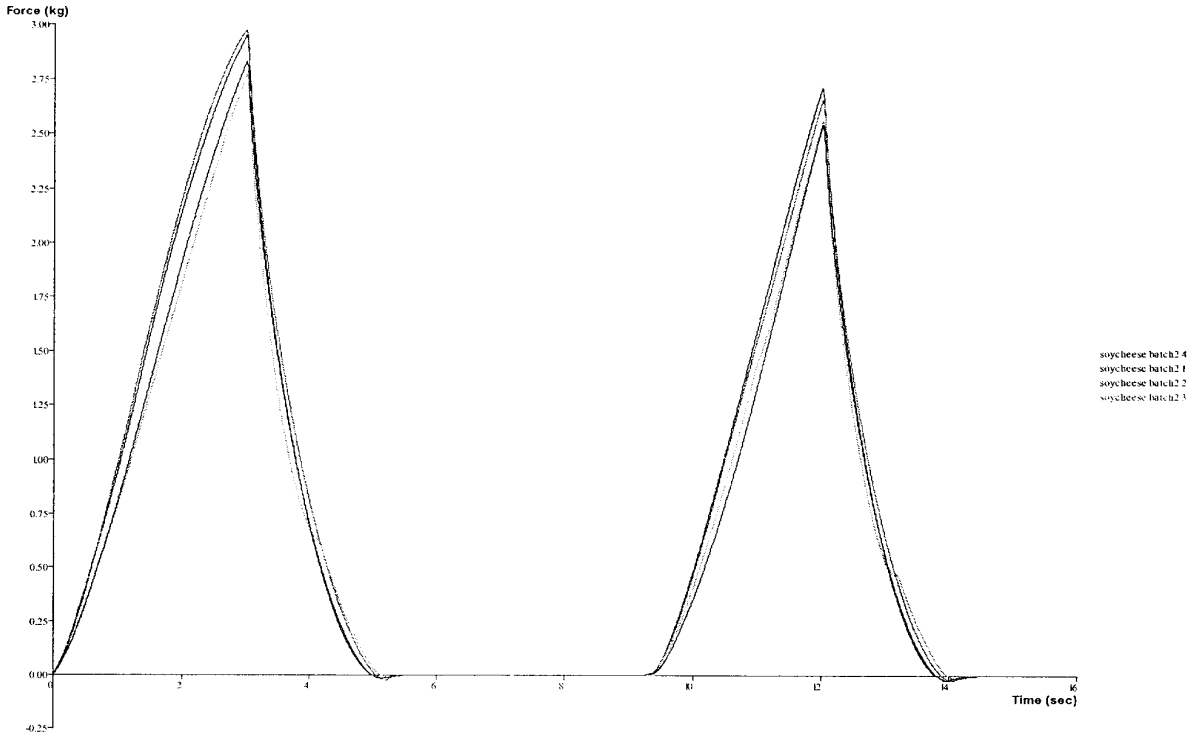
Force (kg)
3.00
2.75
2.50
2.25
2.00
1.75
1.50
1.25
1.00
0.75
0.50
0.25
0.00
-0.25
0
2
4
6
8
10
12
14
16
Time (sec)
soycheese batch2 4
soycheese batch2 1
soycheese batch2 2
soycheese batch2 3

Figure 7

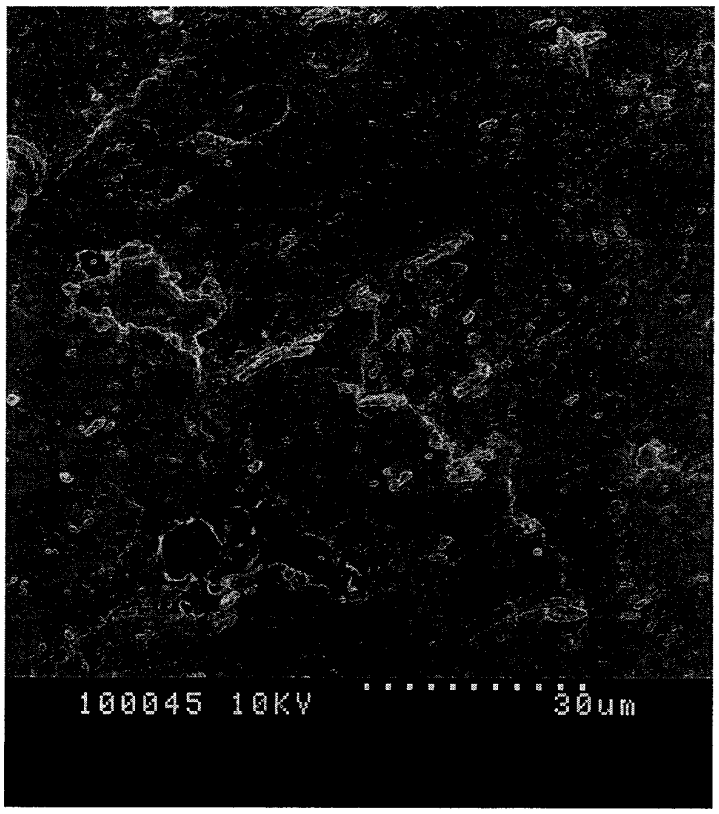

Figure 8

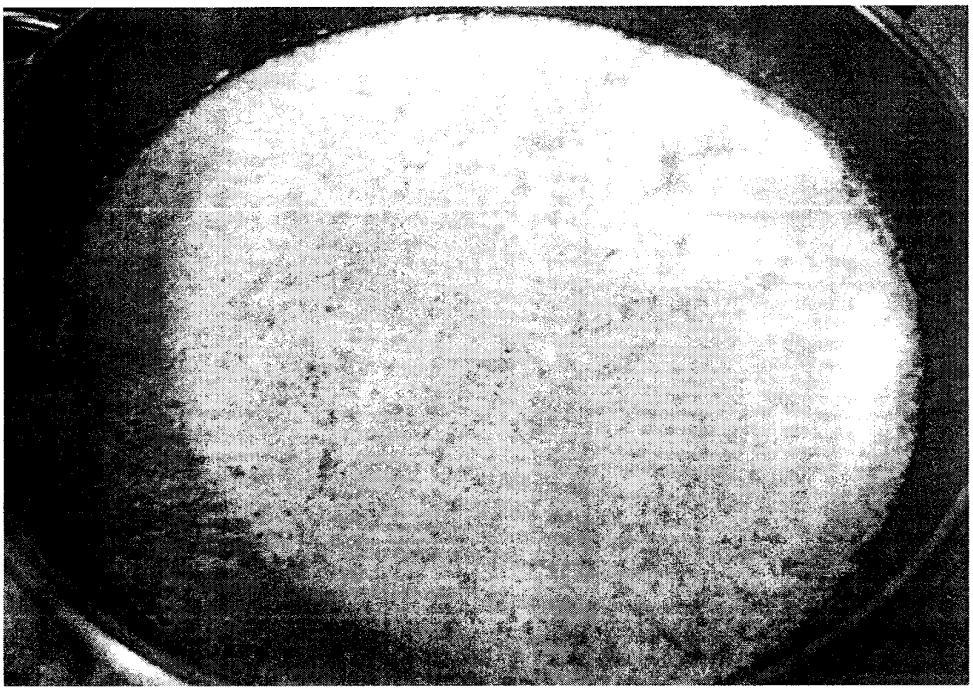

Figure 9A

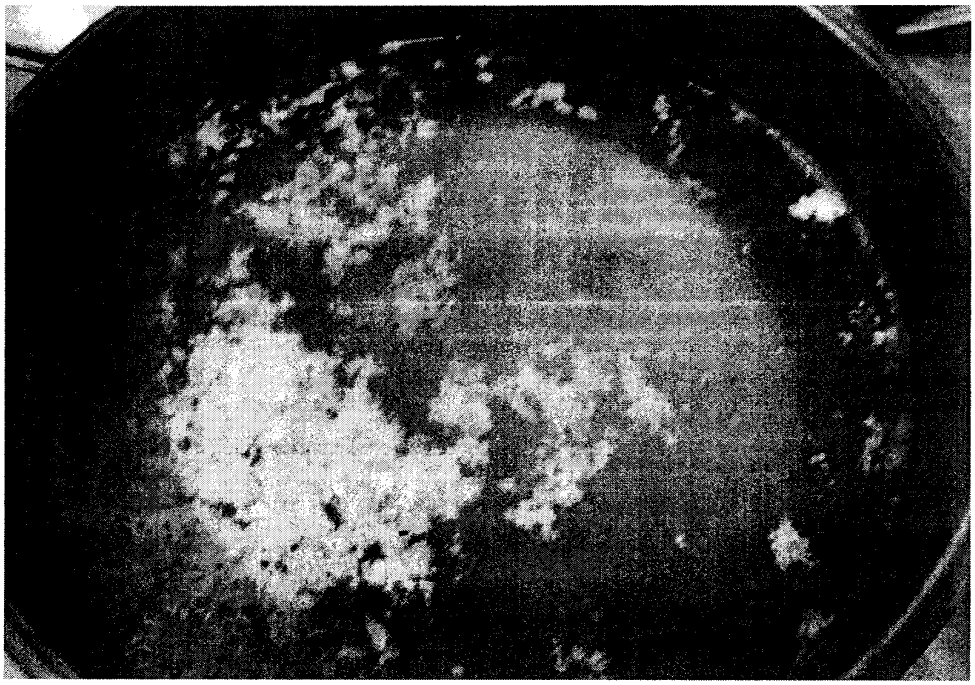

Figure 9B

Figure 9C

Figure 9D

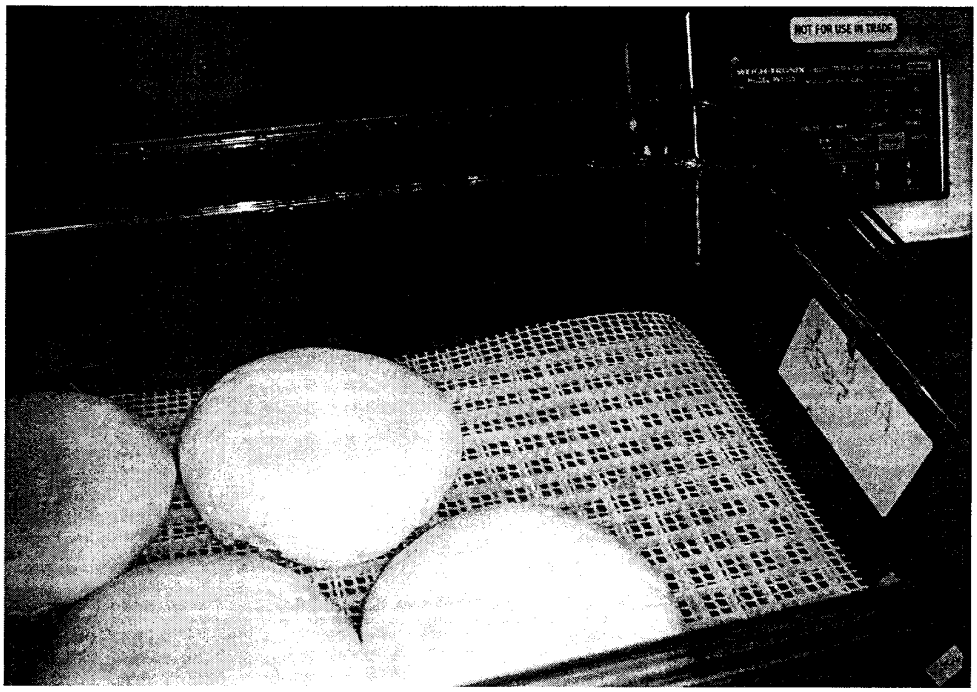

Figure 9E

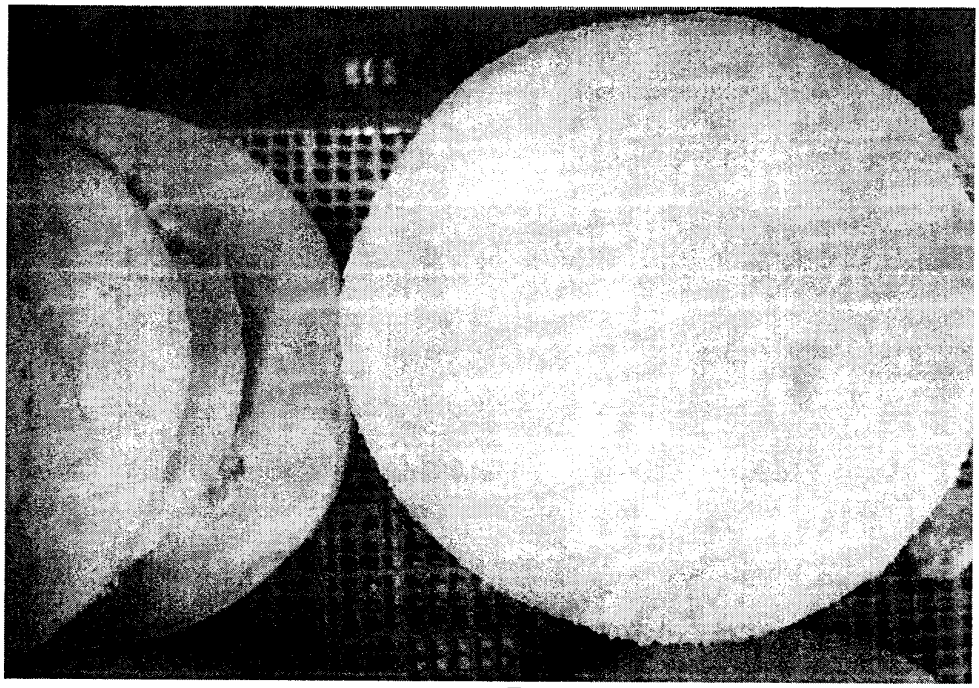

Figure 9F

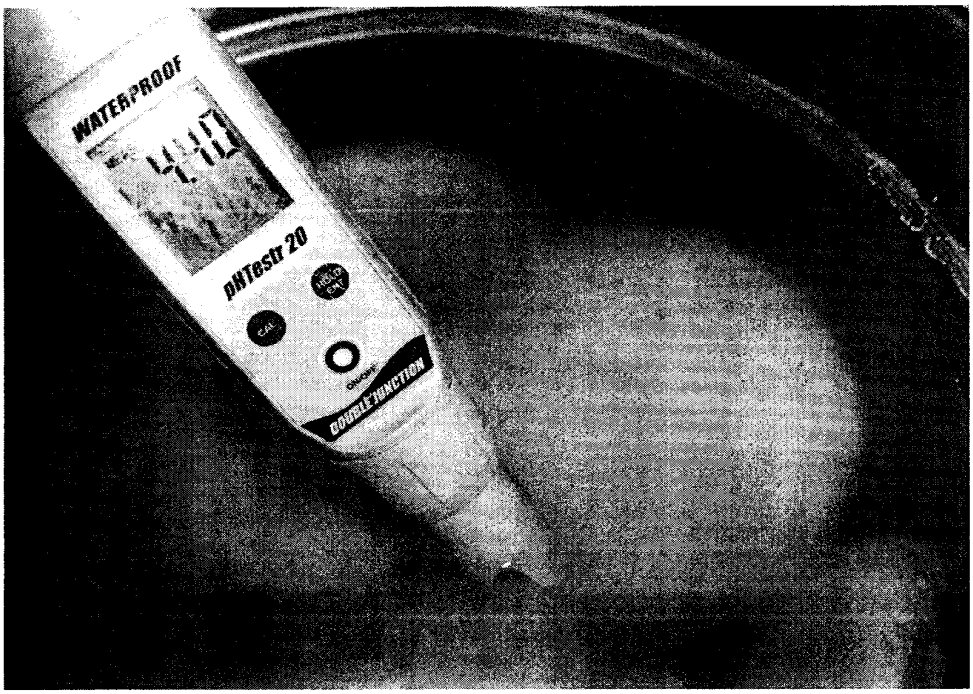

Figure 9G

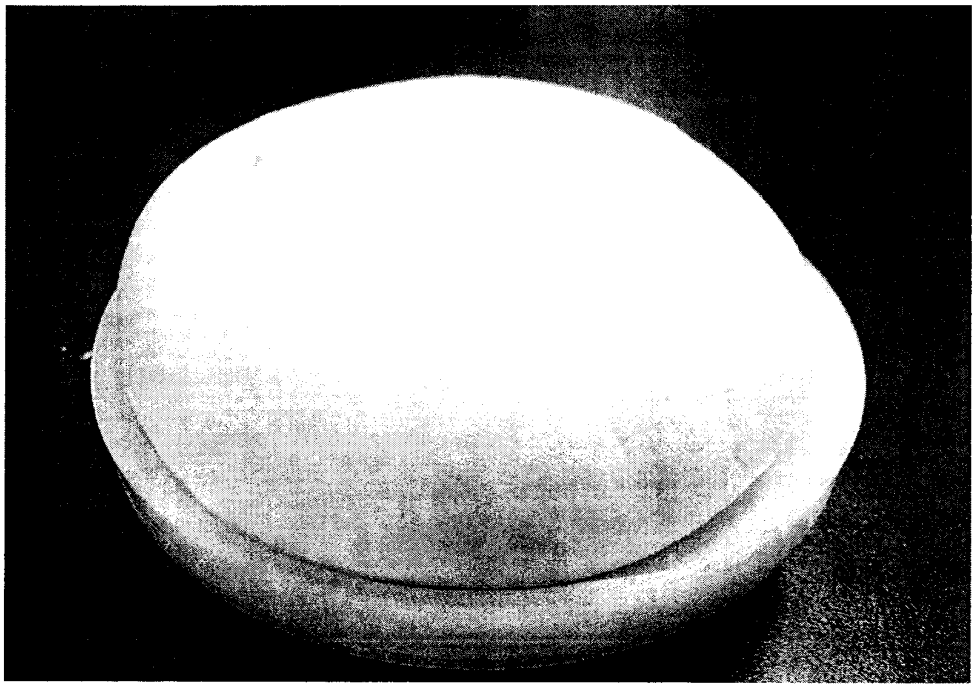

Figure 9H

INTERNATIONAL SEARCH REPORT

International application No.
PCT/CA2012/000445

A. CLASSIFICATION OF SUBJECT MATTER
IPC: ***A23C 19/055*** (2006.01)
According to International Patent Classification (IPC) or to both national classification and IPC

B. FIELDS SEARCHED

Minimum documentation searched (classification system followed by classification symbols)
IPC: A23C

Documentation searched other than minimum documentation to the extent that such documents are included in the fields searched
IPC: A23L

Electronic database(s) consulted during the international search (name of database(s) and, where practicable, search terms used)
Epoque (Full Text, Epodoc), Canadian Patent Database
Keywords: soy, milk, cheese, yogurt, rennet, enzyme, gel, slurry, matrix, network, coagulation, analog, heat, cool, acid, casein, glycinin

C. DOCUMENTS CONSIDERED TO BE RELEVANT

Category*	Citation of document, with indication, where appropriate, of the relevant passages	Relevant to claim No.
X	US 6 495 187 B1 (BORDERS ET AL.) 17 December 2002 (17-12-2002) Abstract Column 1 line 38 - Column 4 line 33 Examples, Claims	19-31
X	US 2001/0046531A1 (GOTTEMOLLER ET AL.) 29 November 2001 (29-11-2002) Entire Document	19-31
X	US 6 455 081 B1 (HAN ET AL.) 24 September 2002 (24-09-2002) Abstract Column 4 line 8 - Column 5 line 67	19-31

[ ] Further documents are listed in the continuation of Box C.

[x] See patent family annex.

* Special categories of cited documents :

"A" document defining the general state of the art which is not considered to be of particular relevance

"E" earlier application or patent but published on or after the international filing date

"L" document which may throw doubts on priority claim(s) or which is cited to establish the publication date of another citation or other special reason (as specified)

"O" document referring to an oral disclosure, use, exhibition or other means

"P" document published prior to the international filing date but later than the priority date claimed

"T" later document published after the international filing date or priority date and not in conflict with the application but cited to understand the principle or theory underlying the invention

"X" document of particular relevance; the claimed invention cannot be considered novel or cannot be considered to involve an inventive step when the document is taken alone

"Y" document of particular relevance; the claimed invention cannot be considered to involve an inventive step when the document is combined with one or more other such documents, such combination being obvious to a person skilled in the art

"&" document member of the same patent family

Date of the actual completion of the international search	Date of mailing of the international search report
06 September 2012 (06-09-2012)	12 September 2012 (12-09-2012)
Name and mailing address of the ISA/CA Canadian Intellectual Property Office Place du Portage I, C114 - 1st Floor, Box PCT 50 Victoria Street Gatineau, Quebec K1A 0C9 Facsimile No.: 001-819-953-2476	Authorized officer Michael Kapur (819) 953-4859

INTERNATIONAL SEARCH REPORT
Information on patent family members

International application No.
PCT/CA2012/000445

Patent document Cited in Search report	Publication Date	Patent Family Member(s)	Publication Date
US6495187 B1	17-12-2002	AR025899 A1	18-12-2002
		MXPA02003125 A	07-11-2002
		WO0122830 A1	05-04-2001
		WO0122830 A8	13-09-2001
		NZ518364 A	25-07-2003
		JP2003510057 A	18-03-2003
		EP1217897 A1	03-07-2002
		CA2385486 A1	05-04-2001
		AU7722800 A	30-04-2001
		US6413569 B1	02-07-2002
US2001046531 A1	29-11-2001	AR025898 A1	18-12-2002
		MXPA02003269 A	07-11-2002
		US6383531 B1	07-05-2002
		WO0122829 A1	05-04-2001
		NZ517773 A	31-10-2003
		JP2003533169 A	11-11-2003
		EP1220614 A1	10-07-2002
		EP1220614 B1	17-05-2006
		DK1220614T T3	18-09-2006
		DE60028062T T2	21-12-2006
		CA2385483 A1	05-04-2001
		AU7478000 A	30-04-2001
		AT326145T T	15-06-2006
		US6399135 B2	04-06-2002
US6455081 B1	24-09-2002	JP2002199842 A	16-07-2002
		JP3727563B2 B2	14-12-2005
		GB2369283 A	29-05-2002
		GB2369283 B	21-07-2004
		AU769515B B2	29-01-2004
		AU7733601 A	11-04-2002
		CA2358320 A1	02-04-2002
		CA2358320 C	12-12-2006
		KR20020027216 A	13-04-2002
		KR100816582B B1	24-03-2008

(12) INTERNATIONAL APPLICATION PUBLISHED UNDER THE PATENT COOPERATION TREATY (PCT)

(19) World Intellectual Property Organization
International Bureau

(43) International Publication Date
17 July 2014 (17.07.2014)

WIPO | PCT

(10) International Publication Number
WO 2014/110540 A1

(51) International Patent Classification:
A23L 1/052 (2006.01) *A23C 19/055* (2006.01)
A23L 1/36 (2006.01)

(21) International Application Number:
PCT/US2014/011362

(22) International Filing Date:
13 January 2014 (13.01.2014)

(25) Filing Language: English

(26) Publication Language: English

(30) Priority Data:
61/751,818 11 January 2013 (11.01.2013) US

(71) Applicant: **MARAXI, INC.** [US/US]; 525 Chesapeake Drive, Redwood City, California 94063 (US).

(72) Inventors; and
(71) Applicants : **HOLZ-SCHIETINGER, Celeste** [US/US]; 1159 Sage Street, East Palo Alto, California 94303 (US). **KLAPHOLZ, Sue** [US/US]; 76 Peter Coutts Circle, Stanford, California 94305 (US). **VARADAN, Ranjani** [IN/US]; 1580 Skelton Court, Fremont, California 94536 (US). **CASINO, Monte** [US/US]; 370 Angus West, Apt. 1, San Bruno, California 94066 (US). **BROWN, Patrick O'Reilly** [US/US]; 76 Peter Coutts Circle, Stanford, California 94305 (US). **EISEN, Michael** [US/US]; 2408 McGee Avenue, Berkeley, California 94703 (US).

(74) Agents: **MCCORMICK GRAHAM, Monica** et al.; Fish & Richardson P.C., P.O. Box 1022, Minneapolis, Minnesota 55440 (US).

(81) Designated States *(unless otherwise indicated, for every kind of national protection available)*: AE, AG, AL, AM, AO, AT, AU, AZ, BA, BB, BG, BH, BN, BR, BW, BY, BZ, CA, CH, CL, CN, CO, CR, CU, CZ, DE, DK, DM, DO, DZ, EC, EE, EG, ES, FI, GB, GD, GE, GH, GM, GT, HN, HR, HU, ID, IL, IN, IR, IS, JP, KE, KG, KN, KP, KR, KZ, LA, LC, LK, LR, LS, LT, LU, LY, MA, MD, ME, MG, MK, MN, MW, MX, MY, MZ, NA, NG, NI, NO, NZ, OM, PA, PE, PG, PH, PL, PT, QA, RO, RS, RU, RW, SA, SC, SD, SE, SG, SK, SL, SM, ST, SV, SY, TH, TJ, TM, TN, TR, TT, TZ, UA, UG, US, UZ, VC, VN, ZA, ZM, ZW.

(84) Designated States *(unless otherwise indicated, for every kind of regional protection available)*: ARIPO (BW, GH, GM, KE, LR, LS, MW, MZ, NA, RW, SD, SL, SZ, TZ, UG, ZM, ZW), Eurasian (AM, AZ, BY, KG, KZ, RU, TJ, TM), European (AL, AT, BE, BG, CH, CY, CZ, DE, DK, EE, ES, FI, FR, GB, GR, HR, HU, IE, IS, IT, LT, LU, LV, MC, MK, MT, NL, NO, PL, PT, RO, RS, SE, SI, SK, SM, TR), OAPI (BF, BJ, CF, CG, CI, CM, GA, GN, GQ, GW, KM, ML, MR, NE, SN, TD, TG).

Published:
— *with international search report (Art. 21(3))*

[Continued on next page]

(54) Title: NON-DAIRY CHEESE REPLICA COMPRISING A COACERVATE

(57) Abstract: Provided herein are methods and compositions for the production of cheese replicas. Generally the cheese replicas are produced by inducing the enzymatic curdling of non-dairy milks.

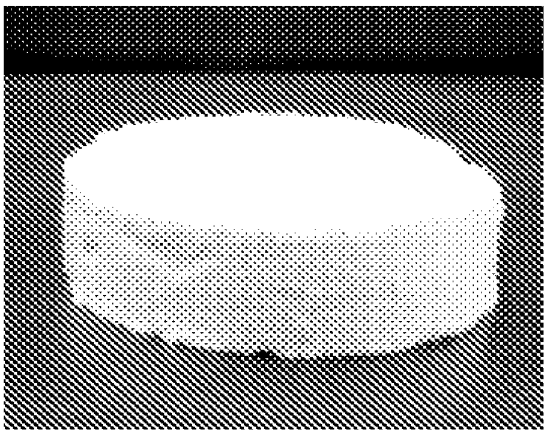

FIG. 11

WO 2014/110540 A1

— *before the expiration of the time limit for amending the claims and to be republished in the event of receipt of amendments (Rule 48.2(h))*

NON-DAIRY CHEESE REPLICA COMPRISING A COACERVATE

CROSS-REFERENCE TO RELATED APPLICATIONS

This application claims priority to U.S. Application Serial No. 61/751,818, filed January 11, 2013, and is related to co-pending Application Serial No PCT/US12/46552, filed July 12, 2012, all of which are incorporated herein by reference.

BACKGROUND OF THE INVENTION

Cheese making has relied on dairy milks as the major ingredient for more than 4000 years. Dairy cheese is usually made from curds formed from dairy milk. Dairy milks can readily be made to form curds suitable for making cheese by contacting the dairy milk with rennet (an aspartic protease which cleaves kappa-casein) at mildly acidic pH. Some cheeses, e.g., cream cheese, cottage cheese and paneer, are made without rennet. In the absence of rennet, dairy cheese may be induced to curdle with acid (e.g., lemon juice, vinegar, etc.) or a combination of heat and acid. Acid coagulation can also occur naturally from starter culture fermentation. The strength of the curds depends on the type of coagulation. Most commercially produced cheeses use some type of rennet (animal, vegetable or microbial-derived) in their production. Commodity cheeses or "processed cheeses" such as bulk cheddar, food-service mozzarella pizza and "cheese products," or "cheese foods" such as American cheese, American singles, Velveeta, and Cheese Whiz are typically produced from dairy-derived ingredients and other additives using industrial processes which sometimes little resemble traditional cheese making.

The global dairy sector contributes an estimated 4 percent to the total global anthropogenic green house gas emissions. Producing 1 kg of cheddar cheese requires an average of 10,000 L of fresh water. Additionally, many individuals cannot digest and metabolize lactose. In these individuals enteric bacteria ferment the lactose, resulting in various abdominal symptoms, which can include abdominal pain, bloating, flatulence, diarrhea, nausea, and acid reflux. Additionally, the presence of lactose and its fermentation products raises the osmotic pressure of the colon contents. Approximately 3.4% of children in the U.S.A. are reported to have allergies to dairy milks. Many individuals choose to avoid milk for ethical or religious reasons.

Non-dairy milks, including plant-derived milks avoid many of the environmental, food sensitivity, ethical and religious problems associated with dairy milk and they can be made free of lactose, making the generation of dairy substitutes using the plant derived milks attractive. However, rennet is not an effective agent for inducing non-dairy proteins or emulsions, including plant-derived milks (e.g., almond milk, chestnut milk, pecan milk, hazelnut milk, cashew milk, pine nut milk, or walnut milk), to curdle. Consequently, traditional cheese making techniques have not been successfully used to produce non-dairy cheese replicas.

Flavor and aroma in dairy cheese results in part from the degradation of lactose, proteins and fats, carried out by ripening agents, which include bacteria and enzymes in the milk, bacterial cultures added during the cheese-making process, rennet, other proteases, lipases, added molds and/or yeasts and bacteria and fungi that opportunistically colonize the cheese during ripening and aging. In addition, the bacterial cultures and fungi used in traditional dairy cheesemaking use microorganisms adapted to growing and producing flavors in dairy milks. Hence, traditional cheese culturing techniques have not been successfully used to produce non-dairy cheese replicas.

Cheese replicas made principally of non-dairy ingredients are commercially available. Many of these cheese replicas include some dairy ingredients, for example, casein. Some commercially available cheese replicas contain no animal products. These include fermented cheese replicas made from nut milks from which insoluble carbohydrates have not been effectively removed, and made without using a protein crosslinking agent and several products in which a starch is a principal ingredient or containing agar, carrageenan or tofu to provide the desired texture. The few fermented products contain *Lactobacillus acidophilus*, a microbe often used in dairy yogurts. Most tasters consider none of the currently available cheese replicas to adequately replicate the taste, aroma and mouthfeel of dairy cheeses.

Complex carbohydrates in currently available cheese replicas made from nut milks have unfavorable effects on the texture, resulting in a product with a grainy mouthfeel and lacking the creaminess of dairy cheeses.

Starches that comprise the major gelling agent in many currently available cheese replicas lead to a relatively high carbohydrate content, which may be undesirable to consumers, for example those wishing to limit carbohydrate intake.

Because of these deficiencies, there is currently no cheese replica that is acceptable to most consumers as an alternative to traditional dairy cheeses.

Thus, it is clear that there is a great need in the art for an improved method and system for producing non-dairy cheese replicas while avoiding the shortcomings and drawbacks of the cheese replicas that have previously been available to consumers.

SUMMARY OF THE INVENTION

The invention relates to methods and compositions for producing non-dairy milk and cheese products, including without limitation, plant-derived milk and cheese products, as an alternative to dairy products for human consumption.

In one aspect, this document features a non-dairy cheese replica that includes a coacervate comprising one or more isolated and purified proteins from a non-animal source. The one or more isolated and purified proteins can be plant proteins (e.g., seed storage proteins, pea proteins, Lupine proteins, proteins from a legume, chickpea proteins, or lentil proteins. The pea proteins can include pea vicilins and/or pea legumins. The non-dairy cheese replica can include one or more microbes selected from bacteria, molds, and yeast.

This document also features a non-dairy cheese replica that includes a cold set gel comprising one or more isolated and purified proteins from a non-animal source and a salt. The non-dairy cheese replica can include one or more heat-labile ingredients such as one or more fats, microbes, volatile compounds, or enzymes. The non-dairy cheese replica can include one or more microbes selected from bacteria, molds, and yeast.

The one or more microbes in the non-dairy cheese replicas can be selected from the group consisting of a *Penicillium* species, a *Debaryomyces* species, a *Geotrichum* species, a *Corynebacterium* species, a *Streptococcus* species, a *Verticillium* species., a *Kluyveromyces* species, a *Saccharomyces* species, a *Candida* species, a *Rhodosporidum* species, a *Cornybacteria* species, *a Micrococcus* species, a *Lactobacillus* species, a *Lactococcus* species, a *Staphylococcus* species, a *Halomonas* species, a *Brevibacterium* species, a *Psychrobacter* species, a *Leuconostocaceae* species, a *Pediococcus* species, a *Propionibacterium* species, and a lactic acid bacterium.

In some embodiments, the one or more microbes are selected from the group consisting of *Lactococcus lactis lactis (*LLL*), Leuconostoc mesenteroides cremoris (LM), Lactococcus lactis cremoris* (LLC), *Pediococcus pentosaceus, Clostridium butyricum, Lactobacillus delbrueckii lactis, Lactobacillus delbrueckii bulgaricus, Lactobacillus helveticus, Lactobacillus plantarum, Lactobacillus casei, Lactobacillus rhamnosus, Staphylococcus xylosus* (SX), *Lactococcus lactis biovar diacetylactis* (LLBD), *Penicillium roqueforti*, *Penicillium candidum*, *Penicillium camemberti, Penicillium nalgiovensis Debaryomyces hansenii, Geotrichum candidum*, *Streptococcus thermophiles* (TA61), *Verticillium lecanii*, *Kluyveromyces lactis*, *Saccharomyces cerevisiae*, *Candida utilis*, *Rhodosporidum infirmominiatum* and *Brevibacterium linens.*

This document also features a non-dairy cheese replica comprising a solidified mixture of one or more isolated and purified proteins from a non-animal source and one or more isolated plant based lipids, said cheese replica comprising one or more microbes selected from the group consisting of *Pediococcus pentosaceus, Clostridium butyricum, Lactobacillus delbrueckii lactis, Lactobacillus delbrueckii bulgaricus, Lactobacillus helveticus, Lactobacillus plantarum, Lactobacillus casei, Lactobacillus rhamnosus, Staphylococcus xylosus,* and *Brevibacterium linens*.

In another aspect, this document features a non-dairy cheese replica that includes a solidified non-dairy milk, nut milk, and one or microbes selected from the group consisting of *Pediococcus pentosaceus, Clostridium butyricum, Lactobacillus delbrueckii lactis, Lactobacillus delbrueckii bulgaricus, Lactobacillus helveticus, Lactobacillus plantarum, Lactobacillus casei, Lactobacillus rhamnosus, Staphylococcus xylosus,* and *Brevibacterium linens,* wherein at least 85% of the insoluble solids of the non-dairy milk have been removed, wherein the non-dairy milk is a nut milk, a bean milk, or a grain milk. Such a non-dairy replica further include one of more microbes selected from the group consisting of *Penicillium roqueforti*, *Debaryomyces hansenii*, *Geotrichum candidum*, *Penicillium candidum*, *Corynebacteria*, *Streptococcus thermophiles, Penicillium camemberti, Penicillium nalgiovensis, Verticillium lecanii, Kluyveromyces lactis, Saccharomyces cerevisiae, Candida utilis, Rhodosporidum infirmominiatum, Cornybacteria, a Micrococcus species,* a *Lactobacillus species,* a *Lactococcus species, Lactococcus lactis lactis (*LLL*), Leuconostoc mesenteroides cremoris (LM), Lactococcus lactis cremoris* (LLC), a *Staphylococcus species,* a *Halomonas species,* a *Brevibacterium sps,* a *Psychrobacter sps,* a *Leuconostocaceae sps,* a *Pediococcus species, Leuconostoc mesenteroides, Lactococcus lactis biovar. diacetylactis* (LLBD) or a *Propionibacterium* species.

In another aspect, this document features a non-dairy cheese replica that includes an isolated and solidified non-dairy cream fraction and one or microbes selected from the group consisting of *Pediococcus pentosaceus, Clostridium butyricum, Lactobacillus delbrueckii lactis, Lactobacillus delbrueckii bulgaricus, Lactobacillus helveticus, Lactobacillus plantarum, Lactobacillus casei, Lactobacillus rhamnosus, Staphylococcus xylosus,* and *Brevibacterium linens*. Such a non-dairy replica further include one of more

microbes selected from the group consisting of *Penicillium roqueforti*, *Debaryomyces hansenii*, *Geotrichum candidum*, *Penicillium candidum*, *Corynebacteria*, *Streptococcus thermophiles, Penicillium camemberti, Penicillium nalgiovensis, Verticillium lecanii, Kluyveromyces lactis, Saccharomyces cerevisiae, Candida utilis, Rhodosporidum infirmominiatum, Cornybacteria, a Micrococcus species,* a *Lactobacillus species,* a *Lactococcus species, Lactococcus lactis lactis (*LLL*), Leuconostoc mesenteroides cremoris (LM), Lactococcus lactis cremoris* (LLC), a *Staphylococcus species,* a *Halomonas species,* a *Brevibacterium sps,* a *Psychrobacter sps,* a *Leuconostocaceae sps,* a *Pediococcus species, Leuconostoc mesenteroides, Lactococcus lactis biovar. diacetylactis* (LLBD) or a *Propionibacterium* species.

In any of the non-dairy replicas described herein, the replica can include two of LLL, LLC, and LLBD (e.g., LLC and LLL, LLL and LLBD, or LLL, LLC, and LLBD) or can include SX and TA61. The non-dairy cheese replica further can include *Penicillium roqueforti* and *Debaryomyces hansenii*.

The one or more non-animal based proteins can be plant proteins (e.g., seed storage protein or an oil body protein).The seed storage protein can be an albumin, glycinin, conglycinin, globulin, legumin, vicilin, conalbumin, gliadin, glutelin, glutenin, hordein, prolamin, phaseolin, proteinoplast, secalin, triticeae gluten, or zein.The oil body protein can be an oleosin, a caloleosin, or a steroleosin. The plant protein can be selected from the group consisting of ribosomal proteins, actin, hexokinase, lactate dehydrogenase, fructose bisphosphate aldolase, phosphofructokinases, triose phosphate isomerases, phosphoglycerate kinases, phosphoglycerate mutases, enolases, pyruvate kinases, proteases, lipases, amylases, glycoproteins, lectins, mucins, glyceraldehyde-3-phosphate dehydrogenases, pyruvate decarboxylases, actins, translation elongation factors, histones, ribulose-1,5-bisphosphate carboxylase oxygenase (RuBisCo), ribulose-1,5-bisphosphate carboxylase oxygenase activase (RuBisCo activase), collagens, kafirin, avenin, dehydrins, hydrophilins, and natively unfolded proteins.

In any of the non-dairy replicas described herein, the replica further can include one or more sugars (e.g., sucrose, glucose, fructose, and/or maltose), one or more purified enzymes (a lipase, a protease, and/or an amylase), a melting salt (e.g., sodium citrate, trisodium pyrophosphate, sodium hexametaphosphate, disodium phosphate, or any

combination thereof), a divalent cation (e.g., Fe^{2+}, Mg^{2+}, Cu^{2+},or Ca^{2+}), an isolated amino acid (e.g., methionine, leucine, isoleucine, valine, proline, or alanine) or other additive selected from the group consisting of a food product, a yeast extract, miso, molasses, a nucleobase, an organic acid, a vitamin, a fruit extract, coconut milk, and a malt extract, one or more plant-derived lipids, one or more oils derived from an algae, fungus, or bacterium, or one or more free fatty acids. The plant-derived lipids can include corn oil, olive oil, soy oil, peanut oil, walnut oil, almond oil, sesame oil, cottonseed oil, canola oil, safflower oil, sunflower oil, flax seed oil, palm oil, palm kernel oil, palm fruit oil, coconut oil, babassu oil, shea butter, mango butter, cocoa butter, wheat germ oil, or rice bran oil (e..g, canola oil, cocoa butter, and/or coconut oil).

In any of the non-dairy cheese replicas described herein, the replica further can include a cross-linking enzyme (e.g., a transglutaminase or a lysyl oxidase).

In any of the non-dairy cheese replicas described herein, the cheese replica can have one or more of: a) increased creamy, milky, buttery, fruity, cheesy, free fatty acids, sulfury, fatty, sour, floral, or mushroom flavor or aroma notes; 2) reduced nutty, planty, beany, soy, green, vegetable, dirty, or sour flavor or aroma notes; 3) an increased creamy texture; 4) an improved melting characteristic; and 5) an increased stretching ability, relative to a corresponding cheese replica lacking the one or more microbes, sugars, divalent cations, isolated enzymes, isolated amino acids or other additive, plant-derived lipids, or combinations thereof.

For example, a cheese replica can have an increase in one or more of acetoin, diacetyl, 2,3-hexandione, or 5-hydroxy-4-octanone, or a decrease in one or more of benzaldehyde, 1-hexanol, 1-hexanal, furan, benzaldehyde or 2-methyl-2-propanol, pyrazine, or heptanal relative to a corresponding cheese replica lacking said one or more microbes, sugars, divalent cations, isolated enzymes, isolated amino acids or other additive, plant-derived lipids, or combinations thereof.

For example, the cheese replica can have an increase in methional and/or dimethyl trisulfide relative to a corresponding cheese replica lacking said one or more microbes, sugar, divalent cations, isolated enzymes, isolated amino acids or other additive, plant-derived lipids, or combinations thereof.

For example, the cheese replica can have an increase in one or more of butanoic acid, propanoic acid, hexanoic acid, octanoic acid, or decanoic acid relative to a corresponding cheese replica lacking said one or more microbes, sugars, divalent cations, isolated enzymes, isolated amino acids or other additive, plant-derived lipids, or combinations thereof.

For example, the cheese replica can have an increase in one or more of 2-heptanone, 2-undecanone, 2-nonanone, 2-butanone, 2-methyl propanoic acid, 2-methyl butanoic acid, or 3-methyl butanoic acid relative to a corresponding cheese replica lacking said one or more microbes, sugars, divalent cations, isolated enzymes, isolated amino acids or other additive, plant-derived lipids, or combinations thereof.

For example, the cheese replica can have an increase in one or more of ethyl butanoate or methyl hexanoate relative to a corresponding cheese replica lacking said one or more microbes, sugars, divalent cations, isolated enzymes, isolated amino acids or other additive, plant-derived lipids, or combinations thereof.

For example, the cheese replica can have (i) an increase in ethyl octanoate and/or 2-ethyl-1-hexanol or (ii) an increase in 2-methyl butanal and/or 3-methyl butanal relative to a corresponding cheese replica lacking said one or more microbes, sugars, divalent cations, isolated enzymes, isolated amino acids or other additive, plant-derived lipids, or combinations thereof.

For example, the cheese replica can have an increase in acetic acid relative to a corresponding cheese replica lacking the one or more microbes, sugars, divalent cations, isolated enzymes, isolated amino acids or other additive, plant-derived lipids, or combinations thereof.

For example, the cheese replica can have an increase in one or more of gamma-octalactone, delta-octalactone, gamma-nonalactone, butyrolactone, or methyl isobutyl ketone relative to a corresponding cheese replica lacking said one or more microbes, sugars, divalent cations, isolated enzymes, isolated amino acids, yeast extract, plant-derived lipids, or combinations thereof.

For example, the cheese replica can have an increase in one or more of nonanol or 1-octen-3-ol relative to a corresponding cheese replica lacking said one or more

microbes, sugars, divalent cations, isolated enzymes, isolated amino acids, yeast extract, plant-derived lipids, or combinations thereof.

This document also features a method of making a non-dairy cheese replica. The method includes solidifying a mixture of one or more isolated and purified proteins from a non-animal source and one or more isolated fats, the mixture comprising one or more microbes selected from the group consisting of *Pediococcus pentosaceus, Clostridium butyricum, Lactobacillus delbrueckii lactis, Lactobacillus delbrueckii bulgaricus, Lactobacillus helveticus, Lactobacillus plantarum, Lactobacillus casei, Lactobacillus rhamnosus, Staphylococcus xylosus,* and *Brevibacterium linens*. The solidifying can include cross-linking the proteins using a transglutaminase or a lysyl oxidase, subjecting the mixture to a heat / cool cycle, forming a cold set gel, forming a coacervate comprising one or more isolated and purified proteins from a non-animal source. The method further can include adding one or more of the following: the replica further can include one or more sugars (e.g., sucrose, glucose, fructose, and/or maltose), one or more purified enzymes (a lipase, a protease, and/or an amylase), a melting salt (e.g., sodium citrate, trisodium pyrophosphate, sodium hexametaphosphate, disodium phosphate, or any combination thereof), a divalent cation (e.g., Fe2+, Mg2+, Cu2+,or Ca2+), an isolated amino acid (e.g., methionine, leucine, isoleucine, valine, proline, or alanine) or other additive selected from the group consisting of a food product, a yeast extract, miso, molasses, a nucleobase, an organic acid, a vitamin, a fruit extract, coconut milk, and a malt extract, one or more plant-derived lipids, one or more oils derived from an algae, fungus, or bacterium, or one or more free fatty acids. The method further can include aerating the mixture. The method can include incubating said mixture with one microbe for a period of time and then adding a second microbe to said mixture.

This document also features a method for making a cold set gel. The method includes denaturing a solution comprising at least one isolated and purified plant proteins under conditions wherein said isolated and purified protein does not precipitate out of said solution; optionally adding any heat-labile components to said solution of denatured protein; gelling said solution of denatured protein between 4°C and 25°C by increasing the ionic strength; and optionally subjecting said cold set gel to high pressure processing. The one or more isolated and purified proteins can be plant proteins (e.g., seed storage

proteins, pea proteins, Lupine proteins, proteins from a legume, chickpea proteins, or lentil proteins. The pea proteins can include pea vicilins and/or pea legumins. The heat labile components can include one or more microbes. Gelling can be induced using 5 to 100 mM sodium or calcium chloride.

This document also features a method of making a coacervate. The method includes acidifying a solution of one or more isolated and purified proteins from a non-animal source to a pH between 3.5 and 5.5 (e.g., pH 4-5, wherein the solution comprises 100 mM or less of a salt; and isolating the coacervate from said solution; and optionally subjecting said coacervate to high pressure processing. The isolated and purified proteins can be plant proteins (e.g., seed storage proteins, chickpea proteins, lentil proteins, pea proteins or Lupine proteins). The pea proteins can include pea vicilins and/or pea legumins. The pea vicilins can include convicilins. The acidifying step can be done in the presence of a plant based oil.

This document also features a method of minimizing one or more undesirable odors in a composition containing plant proteins. The method includes contacting the composition with a ligand having binding affinity for lipoxygenases. The ligand can be bound to a solid substrate. The composition can be a food composition (e.g. a cheese replica)

In another aspect, this document features a method of minimizing one or more undesirable odors in a composition containing plant proteins. The method includes contacting the composition with activated carbon then removing the activated carbon from the composition. The composition can be a food composition (e.g. a cheese replica)

This document also features a method of minimizing one or more undesirable odors in a composition containing plant proteins. The method includes contacting the composition with a lipoxygenase inhibitor and/or an antioxidant. The composition can be a food composition (e.g. a cheese replica).

This document also features a method for modulating a flavor profile and/or an aroma profile of a cultured non-dairy product. The method includes adding one or more microbes to a non-dairy milk source selected from the group consisting of a nut milk, a grain milk or a bean milk and culturing the microbe-containing non-dairy milk and modulating 1) the aeration rate and/or timing of aeration during the culturing; 2) the

timing of adding the microbes to the mixture; 3) the order of adding the one or more microbes; 4) the cell density of the contacted microbes prior to or after addition to the mixture; or 5) the microbial growth phase of the microbes prior to or after addition to the mixture, whereby the flavor profile and/or aroma profile of the non-dairy milk is modulated. The method further can include adding one or more sugars, divalent cations, isolated enzymes, isolated amino acids or other additives, plant-derived lipids, algal oils, or oil derived from bacteria, oil derived from fungi, or free fatty acids to the mixture during said culturing step. The method further can include solidifying the microbe containing mixture. The product can be a cheese replica, yogurt or sour cream, crème fraiche, or kefir.

This document also features a non-dairy cheese replica comprising a coacervate comprising one or more isolated proteins from a non-animal source. The The one or more isolated and purified proteins can be plant proteins (e.g., seed storage proteins, pea proteins, Lupine proteins, proteins from a legume, chickpea proteins, or lentil proteins. The pea proteins can include pea vicilins and/or pea legumins.

In another aspect, this document features a non-dairy cheese replica comprising (i) a solidified mixture of one or more isolated and purified proteins from a non-animal source and one or more isolated plant based lipids or (ii) a solidified non-dairy milk, nut milk, and one or microbes; wherein the non-dairy cheese replica has a) an increased creamy texture; b) an improved melting characteristic; or an increased stretching ability.

This document also features a method of making a non-dairy cheese replica. The method includes solidifying a mixture of one or more isolated and purified proteins from a non-animal source and one or more isolated fats using high pressure processing. The mixture can include one or more microbes comprising one or more microbes selected from the group consisting of a *Penicillium* species, a *Debaryomyces* species, a *Geotrichum* species, a *Corynebacterium* species, a *Streptococcus* species, a *Verticillium* species., a *Kluyveromyces* species, a *Saccharomyces* species, a *Candida* species, a *Rhodosporidum* species, a *Cornybacteria* species, *a Micrococcus* species, a *Lactobacillus* species, a *Lactococcus* species, a *Staphylococcus* species, a *Halomonas* species, a *Brevibacterium* species, a *Psychrobacter* species, a *Leuconostocaceae* species, a *Pediococcus* species, a *Propionibacterium* species, and a lactic acid bacterium.

This document also features a ricotta cheese replica comprising a solidified nut milk, *Lactococcus lactis lactis*, and *Lactococcus lactis cremoris*. The ricotta cheese of further can include a transglutaminase. The nut milk can be made with almond milk. In some embodiments, it is made with a mixture of almond milk and macadamia nut milk. The ricotta replica has a white and creamy appearance with a buttery appearance. It can be smooth and sweet with toasted almond overtones. The ricotta cheese replica can be whipped or firm. The whipped ricotta has a smooth texture, and a higher moisture content than the firm ricotta. The whipped ricotta replica can be used as substitute for mascarpone. The firm ricotta can be used as a cottage cheese substitute.

In yet another aspect, this document features a blue cheese replica comprising a solidified nut milk, *Lactococcus lactis cremoris*, *Lactococcus lactis diacetylactis*, *Lactococcus lactis lactis*; *Penicillium roquetforte*, and *Debaryomyces hansenii*. The blue cheese of further can include a transglutaminase. The nut milk can include a mixture of almond milk and macadamia nut milk.

In yet another aspect, this document features a method for creating a library of isolated microbial strains for use in flavoring a non-dairy cheese replica. comprising: obtaining a starter culture comprising a heterogenous population of microbial strains; isolating one or more individual microbial strains from said heterogenous population; and determining a flavor contribution of each of said individual microbial strains to a non-dairy cheese replica.

In practicing the invention, in some embodiments the cheese replica is comprised of less than 5% complex carbohydrates.

In practicing the invention, in some embodiments the cheese replica is comprised of less than 5% polysaccharides

In practicing the invention, in some embodiments the cheese exhibits smooth melting.

In some embodiments the invention provides a hard cheese replica and method of making the same. In some embodiments, a non-dairy milk is inoculated with thermophilic cultures before formation of the gel. The hard cheese replica is optionally aged.

In another aspect, the invention provides a blue cheese replica and method of making the same. In some embodiments, the blue cheese replica is prepared from a nut milk. In some embodiments, the nut milk is prepared from almonds and macadamia nuts. In some embodiments, the nut milk is a 50:50 composition of almond and macadamia milk. In some embodiments, the nut milk has 28% cream. In some embodiments, the nut milk is pasteurized. In some embodiments, the nut milk is heated, e.g., to 83 ± 3° F. In some embodiments, microbial cultures are then added to the nut milk. In some embodiments, the microbial cultures comprise MA11 and penicillium roquefortii. In particular embodiments, the microbial cultures are are allowed to hydrate on top of milk for about 5 minutes before they are stirred into the milk). In some embodiments, proteases or lipases are added. In some embodiments, the proteases or lipases are dissolved in water prior to adding to the milk.

In another aspect the invention provides a washed rind cheese replica and methods of making the same. In some embodiments, the washed rind cheese replica is prepared from a nut milk. In some embodiments, the nut milk is prepared from almonds and macadamia nuts. In some embodiments, the nut milk is a 50:50 composition of almond and macadamia milk. In some embodiments, the nut milk has 28% cream.

Unless otherwise defined, all technical and scientific terms used herein have the same meaning as commonly understood by one of ordinary skill in the art to which this invention pertains. Although methods and materials similar or equivalent to those described herein can be used to practice the invention, suitable methods and materials are described below. All publications, patent applications, patents, and other references mentioned herein are incorporated by reference in their entirety. In case of conflict, the present specification, including definitions, will control. In addition, the materials, methods, and examples are illustrative only and not intended to be limiting.

The details of one or more embodiments of the invention are set forth in the accompanying drawings and the description below. Other features, objects, and advantages of the invention will be apparent from the description and drawings, and from the claims. The word “comprising” in the claims may be replaced by “consisting essentially of” or with “consisting of,” according to standard practice in patent law.

BRIEF DESCRIPTION OF THE DRAWINGS

The novel features of the invention are set forth with particularity in the appended claims. A better understanding of the features and advantages of the present invention will be obtained by reference to the following detailed description that sets forth illustrative embodiments, in which the principles of the invention are utilized, and the accompanying drawings of which:

FIG. 1 is a bar graph of the average texture score of each of the soft ripened cheese replicas with the addition of proteases and lipases, as determined by the taste testers.

FIG. 2 is a bar graph of the average firmness of each of the soft ripened cheeses with the addition of proteases, as determined by the texture analyzes.

FIG. 3A and FIG. 3B are bar graphs of the average preference scores and flavor scores, respectively, for the cheese replicas made by varying proteases added and time of protease addition, as determined by taste testers.

FIG. 4 is a bar graph of the average butteriness scores for the cheese replicas made by varying proteases added and time of protease addition, as determined by taste testers. Error bars are the standard deviation of the taste tester scores.

FIG. 5 is a bar graph of the average acidity scores for the cheese replicas made by varying proteases added and time of protease addition, as determined by taste testers.

FIG. 6 is a line graph depicting the effect of individual LF2 and LF5 bacterial strains on the pH of filtered nut media.

FIG. 7 is a bar graph depicting buttery and sour flavor scores for individual LM and LLBD samples.

FIG. 8 is a bar graph depicting the combined buttery and sour flavor scores for LM and LLBD samples.

FIG. 9 is a bar graph depicting nutty and sweet flavor scores for individual LM and LLBD samples.

FIG. 10 is a bar graph depicting the combined nutty and sweet flavor scores for LM and LLBD samples.

FIG. 11 depicts a cheese replica prepared using crosslinked isolated proteins.

FIG. 12 is a line graph depicting the concentration of 2,3-butanedione detected in each sample with 10 mM, 50 mM, or 200 mM glucose and increasing concentrations of citrate.

FIG. 13 is a line graph depicting the concentration of acetoin detected in each sample with 10 mM, 50 mM, or 200 mM glucose and increasing concentrations of citrate.

FIG. 14 is a line graph depicting the concentration of 2,3-hexanedione detected in each sample with 10 mM, 50 mM, or 200 mM glucose and increasing concentrations of citrate.

FIG. 15 is a bar graph depicting the signal intensity of free fatty acids as detected by GCMS in samples cultured with SX.

FIG. 16 is a bar graph depicting the signal intensity of 2-methyl and 3-methyl butanoic acids as detected by GCMS in samples cultured with SX.

FIG. 17 is a bar graph depicting the signal intensity of the cheese acids (butanoic acid, propanoic acid, 3-methyl butanoic acid, and 2-methyl propanoic acid) as detected by GCMS in *Brevibacterium* cultured yeast extract media with additional substrates (citrate, oxalic acid, or pyruvate).

FIG. 18 is a bar graph depicting the signal intensity of "buttery"' compounds (acetoin and 2,3-butanedione) as detected by GCMS in soymilk samples cultured with MD88.

FIG. 19 is a bar graph depicting the signal intensity of "buttery"' compounds (acetoin and 2,3-butanedione) as detected by GCMS in soymilk samples cultured with TA61.

FIG. 20 is a bar graph depicting the signal intensity of 3-methyl-butanoic acid, as detected by GCMS, produced by SX in soymilk with various branched chain amino acids supplemented.

FIG. 21 is a bar graph depicting the signal intensity of 2-methyl-butanoic acid, as detected by GCMS, produced by SX in soymilk with various branched chain amino acids supplemented.

FIG. 22 is a bar graph depicting the signal intensity of 2-methyl-propanoic acid, as detected by GCMS, produced by SX in soymilk with various branched chain amino acids supplemented.

FIG. 23 is a bar graph depicting the signal intensity of 3-methyl-butanoic acid as detected by GCMS in soymilk samples cultured with different concentrations of leucine.

FIG. 24 is a bar graph depicting the signal intensity of dimethyl trisulfide as detected by GCMS in *Brevibacterium* cultured samples.

FIG. 25 is bar graph depicting the signal intensity of acetoin as detected by GCMS in cultured PV with coconut milk.

FIG. 26 is bar graph depicting the signal intensity of 2,3-butanedione as detected by GCMS in cultured PV with coconut milk.

FIG. 27 is bar graph depicting the signal intensity of free fatty acids as detected by GCMS in cultured PV with coconut milk.

DETAILED DESCRIPTION OF THE INVENTION

The present invention discloses methods and compositions for producing desired flavors and textures in cheese made from non-dairy sources. One of skill in the art will recognize that any combination of the embodiments described herein are within the scope of the invention. Broadly, the invention provides methods for making non-dairy cheeses by solidifying a non-dairy cheese source using a variety of techniques, including crosslinking, using a heat / cool cycle, forming a cold set gel, forming a coacervate, or using high pressure processing. The solidifying process can allow the separation of the crosslinked proteins and associated fats into solid curds that can be separated from the "whey," e.g., the liquid remaining after curdling. The solidified proteins can hold a fat emulsion, and have the essential physical characteristics needed for pressing, culturing and ripening a cheese replica derived from non-dairy milk.

As described herein, the texture and/or flavor of the cheese replica, as well as melting characteristic or stretchability of the cheese replica, can be modified by adding one or more specific enzymes (e.g., lipases and/or protease), sugars, proteins, amino acids, divalent cations, melting salts, yeast extract, food product, miso, molasses, nucleobases, organic acids, vitamins, fruit extracts, coconut milk, malt extracts, plant-based lipids, free fatty acids, and one or more microbes. In addition, culture parameters can be adjusted to alter the flavor, texture, melting characteristics, and strechability of a cheese replica. For example, the aeration rate and/or timing of aeration during the culturing; the timing of adding the microbes to the mixture; the order in which two or

more microbes are added, e.g., together or sequentially; the relative amounts of two or more microbes; the absolute number of microbes inoculated; or the microbial growth phase of the microbes prior to or after addition to the mixture,

In some embodiments, one or more specific enzymes (e.g., lipases and/or protease), sugars, proteins, amino acids, divalent cations, melting salts, yeast extract, food product, miso, molasses, nucleobases, organic acids, vitamins, fruit extracts, coconut milk, malt extracts, plant-based lipids, free fatty acids, can be used to affect emulsion stability, protein solubility, suspension stability, or ability to support growth of microbial cultures used in making cheese replicas, yogurt replicas, or other food replicas of cultured dairy products.

In various embodiments, the current invention includes cheese replicas principally, entirely or partially composed of ingredients derived from non-animal sources. In additional embodiments the present invention includes methods for making cheese replicas from non-animal sources. In various embodiments these results are achieved by replicating the curdling process of cheese making in non-dairy milks using a transglutaminase.

Definitions.

The term "isolated protein" as used herein refers to a preparation in which a protein or population of proteins is substantially isolated from a source, wherein non-proteinaceous components have been substantially reduced in the preparation. Non-proteinaceous components may be reduced by a factor of 3 or more, a factor of 5 more more, or a factor of 10 or more relative to the source material from which the protein or proteins have been isolated. The population of proteins may be heterogenous, or the population of proteins may be heterogenous. A non-limiting example of an isolated protein preparation comprising a heterogenous population of proteins is soy protein isolate.

The term "isolated and purified protein" refers to a preparation in which the cumulative abundance by mass of protein components other than the specified protein, which can be a single monomeric or multimeric protein species, is reduced by a factor of 2 or more, 3 or more, 5 or more, 10 or more, 20 or more, 50 or more, 100 or more or

1000 or more relative to the source material from which the specified protein was said to be purified. For clarity, the isolated and purified protein is described as isolated and purified relative to its starting material (e.g., plants or other non-animal sources). In some embodiments, the term "isolated and purified" can indicate that the preparation of the protein is at least 60% pure, e.g., greater than 65%, 70%, 75%, 80%, 85%, 90%, 95%, or 99% pure. The fact that composition can include materials in addition to the isolated and purified protein does not change the isolated and purified nature of the protein as this definition typically applies to the protein before addition to the composition.

The term "homogeneous" can mean a single protein component comprises more than 90% by mass of the total protein constituents of a preparation.

The term "resemble" can mean one composition having characteristics recognizably similar to another composition by an ordinary human observer.

The term "indistinguishable" can mean that an ordinary human observer would not be able to differentiate two compositions based on one or more characteristics. It is possible that two compositions are indistinguishable based on one characteristic but not based on another, for example two compositions can have indistinguishable taste while having colors that are different. Indistinguishable can also mean that the product provides an equivalent function as or performs an equivalent role as the product for which it is substituting.

The term cheese "substitute" or "replica" can be any non-dairy product that can be used in any role commonly served by traditional dairy cheese. A cheese "substitute" or "replica" can be a product that shares visual, olfactory, textural or taste characteristics of cheese such that an ordinary human observer of the product is induced to think of traditional dairy cheese.

The term "controlled", "controlling", and "defined" are used interchangeably herein to refer to the manipulation of a method or components of a composition to achieve a desired characteristic or keep said desired characteristic within certain bounds defined by a user. By way of example only, a controlled fat profile refers to a fat profile wherein the fat content or content of specific fat classes (e.g., saturated or unsaturated) are kept within user-defined limits. By way of other example only, a controlled amount refers to an amount kept within certain bounds defined by a user. For instance, adding a

controlled amount of bacteria may refer to adding bacterial cultures comprising a known population and/or known amount of bacterial strains. By contrast, Rejuvelac is an exemplary composition that comprises an uncontrolled amount of, e.g., bacteria. Rejuvelac is prepared by incubating a liquid containing a bacterial food source in an environment that is conducive to the growth of bacteria, but the amount of bacteria or the types of bacteria that grow in said environment is not kept to within user-defined bounds, e.g., is not controlled.

Non-dairy milks

In one aspect, the invention provides a non-dairy cheese source that can be used as a starting material for preparing a non-dairy cheese. The term "non-dairy cheese source" refers to an emulsion comprising proteins and fats, wherein said proteins and fats are prepared from a non-dairy source. In some embodiments, the non-dairy cheese source can be a non-dairy milk obtained from nuts or seeds. In other embodiments, one or more isolated proteins from a non-animal source as used as a non-dairy cheese source.

In some embodiments, the plant source comprises one or more nuts or seeds. In some embodiments, the plant source is a flour compounded from one or more nuts or seeds (e.g., almonds and macadamia nuts). The term "nut" generally refers to any hard-walled, edible kernel. A nut can be a composite of a hard-shelled fruit and a seed, where the hard-shelled fruit does not open to release the seed. Exemplary nuts include, but are not limited to almonds, butternut, hickory nuts, wingnuts (*Pterocarya*), beech nuts, oak nuts, filberts, hornbeam nuts, soy nuts, cashews, brazil nuts, chestnuts, coconuts, hazelnuts, macadamia nuts, mongogo (*Schinziophyton rautanenii*), peanuts, pecans, pine nuts, pistachios, or walnuts. Any large, oily kernel found within a shell and used in food may be regarded as a nut. Plant seeds can include any embryonic plant enclosed in a seed coat. Exemplary plant seeds include, e.g., legumes such as, e.g., alfalfa, clover, peas, beans, lentils, lupins, mesquite, carob, soybeans, peanuts, cereals such as, e.g., corn, rice, wheat, barley, sorghum, millet, oats, triticale, rye, buckwheat, fonio, teff, amaranth, spelt, quinoa, angiosperms (e.g., flowering plants such as, for example, sunflowers) and gymnosperms. "Gymnosperm" generally refer to plant species that produce seeds that are generally not enclosed in a nut or fruit. Exemplary gymnosperms include conifers such

as, e.g., pine trees, spruce trees, and fir trees. In some embodiments, the non-dairy milk is not soy milk.

Non-dairy products or compositions include products or compositions where the constituent proteins, fats and/or small molecules can be isolated from, or secreted by, plants, bacteria, viruses, archaea, fungi, or algae. The non-dairy proteins also can be recombinantly produced using polypeptide expression techniques (e.g., heterologous expression techniques using bacterial cells, insect cells, fungal cells such as yeast cells, plant cells). In some cases, standard polypeptide synthesis techniques (e.g., liquid-phase polypeptide synthesis techniques or solid-phase polypeptide synthesis techniques) can be used to produce proteins synthetically. In some cases, *in vitro* transcription/translation reactions are used to produce the proteins. Non-dairy products are generally not derived from cows, goats, buffalo, sheep, horses, camels, or other mammals. In some embodiments non-dairy products do not contain dairy proteins. In some embodiments non-dairy products do not contain dairy fats.

The non-dairy milk can be made by a method comprising preparing the nuts or plant seeds with processing steps such as sterilizing, blanching, shocking, decompounding, centrifugation, or washing. The nuts or seeds can be decompounded for example, by grinding or blending or milling the nuts in a solution comprising water. Alternative methods for decompounding the nuts or dried seeds can include crushing, tumbling, crumbling, atomizing, shaving, pulverizing, grinding, milling, water eroding (for example with a water jet), or finely chopping the nuts or plant seeds. In some embodiments, the decompounding step takes place in a blender, a continuous flow grinder, or a continuous flow mill. The decompounding can be followed by a sorting, filtering, screening, air-classification, or separation step. In some embodiments the decompounded nuts or seeds can be stored prior to the formation of a non-dairy milk. The aqueous solution can be added before, during, or after the decompounding.

The nuts or seeds used in some embodiments of the invention to make non-dairy milks may have contaminants on the surface which would make a non-dairy milk unsafe or unpalatable. Accordingly the nuts or seeds can be washed or blanched prior to use. The nuts or seeds can also be sterilized to remove, reduce, or kill any contaminants on the surface of the nuts or seeds. A sterilization step can be an irradiation step, a heat step