(19)Korean Intellectual Property Office(KR)
(12) Publication of Unexamined Patent Application (A)

(51) 。 Int. Cl.[8]
G02F 1/13357 (Jan. 2006)

(11) Publication No. 10-2006-0016469
(43) Publication Date February 22, 2006

(21) Application No. 10-2004-0064922
(22) Application Date August 18, 2004

(71) Applicant Samsung Electronics Co., Ltd.
416, Maetan-dong, Yeongtong-gu, Suwon-si, Gyeonggi-do

(72) Inventor Na Dong-gyun
487-5, Sanggal-ri, Giheung-eup, Yongin-si, Gyeonggi-do

(74) Agent Park Young-woo

Request for Examination None

(54) Backlight Unit and Liquid Crystal Display Device Including the Same

Abstract

A backlight unit and a liquid crystal display device including the same are disclosed. The backlight unit includes a light generator and a storage container. The light generator generates light. The storage container accommodates the light generator, and an intake unit through which external air is sucked and an exhaust unit through which internal air is discharged are formed. Accordingly, the thickness and weight of the backlight unit are reduced, and the cooling effect is increased.

Figure Accompanying the Abstract

FIG. 1

Index Words

Backlight unit, Cooling, Convection

Specification

Brief Description of the Drawing

FIG. 1 is an exploded perspective view of a backlight unit according to an exemplary embodiment of the present invention.

FIG. 2 is a top plan view illustrating the backlight unit of FIG. 1 from the bottom.

FIG. 3 is a side view for explaining a cooling process of the backlight unit of FIG. 1.

FIG. 4 is an exploded perspective view of a backlight unit according to another exemplary embodiment of the present invention.

FIG. 5 is a top plan view illustrating the backlight unit of FIG. 4 from the bottom.

FIG. 6 is a side view for explaining a cooling process of the backlight unit of FIG. 4.

FIG. 7 is an exploded perspective view of a backlight unit according to still another exemplary embodiment of the present invention.

FIG. 8 is a top plan view illustrating the backlight unit of FIG. 7 from the bottom.

SEC et al. v. MRI
SEC Exhibit 1010.001
IPR 2023-00220

FIG. 9 is a side view for explaining a cooling process of the backlight unit of FIG. 7.

FIG. 10 is an exploded perspective view of a backlight unit according to still another exemplary embodiment of the present invention.

FIG. 11 is a top plan view illustrating the backlight unit of FIG. 10 from the bottom.

FIG. 12 is a side view for explaining a cooling process of the backlight unit of FIG. 10.

FIG. 13 is an exploded perspective view illustrating a liquid crystal display device having the backlight unit of FIG. 1.

FIG. 14 is an exploded perspective view illustrating a liquid crystal display device having the backlight unit of FIG. 7.

<Description of Symbols for the Main Parts of the Drawing>

100: Areal light source device 110: Reflective plate

112: Coupling hole 120: Sidewall

130: Driving substrate 140: LED light source

200, 300: Storage container 210, 310: Bottom plate

220, 320: First sidewall 230, 330: Second sidewall

240, 340: Third sidewall 250, 350: Fourth sidewall

260, 360: Inner space 212, 312: Through-hole

214, 314: First driving circuit unit Fan

222b, 322b, 332b, 342b, 352b: Fan 224, 324: Second driving circuit unit

500, 600: Backlight unit 800, 900: Liquid crystal display device

820: Optical sheet 840: Liquid crystal display panel

842: Thin film transistor substrate Liquid crystal

846: Color filter substrate 848: Driving module

860: Chassis

Detailed Description of the Invention

Object of the Invention

Field of the Invention and its Related Art

The present invention relates to a backlight unit and a liquid crystal display device including the same, and more particularly, to a backlight unit capable of improving a cooling effect and a liquid crystal display device including the same.

In general, a liquid crystal display device uses the electrical and optical characteristics of liquid crystal to display an image. The liquid crystal display device has the advantage of being very small in volume and light in weight compared to a CRT and the like, and thus is widely used for portable computers, communication devices, liquid crystal TVs, etc.

In order to control the liquid crystal, the liquid crystal display device requires a liquid crystal control part for controlling the liquid crystal

SEC et al. v. MRI
SEC Exhibit 1010.002
IPR 2023-00220

and a light supply part for supplying light to the liquid crystal. As the light supply part of the liquid crystal display, a cold cathode fluorescent lamp (CCFL) having a bar shape or a light emitting diode (LED) having a dot shape is mainly used.

The light emitting diode has an advantage of high color reproducibility. However, the light emitting diode generates a lot of heat due to its light emitting characteristics. In particular, since the light emitting diode emits a lot of heat from the back of a liquid crystal display device, the temperature of a storage container accommodating the light emitting diode is very high.

In order to prevent an increase in the temperature of the storage container, the storage container may include a heat sink or the like having a metal material such as aluminum. However, even when the storage container includes the heat sink, the thickness and weight of the storage container increase, so that the thickness and weight of the liquid crystal display device also increase.

Therefore, when the light emitting diode is used as a light supply part of a liquid crystal display device, or when other devices that generate a lot of heat other than the light emitting diode are used as a light supply part, the temperature of the storage container increases or the thickness and weight thereof increase.

Technical Problems to Be Solved by the Invention

Accordingly, one object of the present invention is to provide a backlight unit with increased cooling effect and reduced thickness and weight.

Another object of the present invention is to provide a liquid crystal display device having the above-described backlight unit.

Structure and Operation of the Invention

In order to embody an object of the present invention as described above, the present invention provides a backlight unit including a light generator and a storage container. The light generator generates light. The storage container accommodates the light generator, and an intake unit for sucking external air and an exhaust unit for discharging internal air are formed.

In order to embody another object of the present invention, the present invention provides a backlight unit including a light generator and a storage container. The light generator generates light. The storage container accommodates the light generator, and an intake unit for sucking external air and an exhaust unit for discharging internal air are formed.

In order to embody still another object of the present invention, the present invention includes a backlight unit and a liquid crystal display panel. The backlight unit includes a light generator that generates light, and a storage container where the light generator is accommodated and an intake unit through which external air is sucked and an exhaust unit through which internal air is discharged are formed. The liquid crystal display panel uses the light emitted from the light generator to display an image.

In order to embody still another object of the present invention, the present invention includes a backlight unit and a liquid crystal display panel. The backlight unit includes a light generator that generates light, and a storage container where the light generator is accommodated and an intake unit through which external air is sucked and an exhaust unit through which internal air is discharged are formed. The liquid crystal display panel uses the light emitted from the light generator to display an image.

According to the present invention, the thickness and weight of the backlight unit are reduced, and the cooling effect is increased. In addition, deterioration of the luminance and contrast ratio of the backlight unit is prevented.

Hereinafter, a backlight unit and a liquid crystal display device including the same according to preferred exemplary embodiments of the present invention will be described in detail with reference to the accompanying figures, but the present invention is not limited or restricted to the following exemplary embodiments.

Backlight Unit

Exemplary Embodiment 1

FIG. 1 is an exploded perspective view of a backlight unit according to an exemplary embodiment of the present invention, and FIG. 2 is a top plan view illustrating the backlight unit of FIG. 1 from the bottom.

SEC et al. v. MRI
SEC Exhibit 1010.003
IPR 2023-00220

Referring to FIGS. 1 and 2, a backlight unit 500 includes an areal light source device 100 and a storage container 200.

The areal light source device 100 includes a reflective plate 110, a sidewall 120, a driving substrate 130, and a plurality of light emitting diode light sources 140.

The reflective plate 110 has a square flat plate shape, and reflects downwardly directed light among the light emitted from the light emitting diode light sources 140 upward. A plurality of coupling holes 112 are formed in the reflective plate 110 so that the light emitting diode light sources 140 can be coupled.

The sidewall 120 is formed on the edge portion of the reflective plate 110, so that the areal light source device 100 is easily coupled to the storage container 200. In the present exemplary embodiment, the sidewall 120 is formed on a pair of opposite edge portions of the reflective plate 110.

The driving substrate 130 is arranged side by side at the lower part of the reflective plate 110. A drive power source is applied to the driving substrate 130 to illuminate the light emitting diode light sources 140.

The light emitting diode light sources 140 are arranged in a line on the driving substrate 130, pass through the coupling holes 112 and are coupled to be positioned on the upper surface of the reflective plate 110. Preferably, the light emitting diode light sources 140 include a red light emitting diode (R) emitting red light, a green light emitting diode (G) emitting green light, and a blue light emitting diode (B) emitting blue light. The red light, green light, and blue light emitting diodes, R, G, and B, emit white light according to a predetermined combination ratio. For example, the ratio of the number of the red light emitting diode R, the green light emitting diode G, and the blue light emitting diode B may be configured to be 2:1:1 or 2:2:1. In addition, the red light, green light and blue light emitting diodes, R, G, and B, may be disposed more than the number shown in FIG. 1. On the contrary, the light emitting diode light sources 140 may include a white light emitting diode emitting white light.

The storage container 200 accommodates the areal light source device 100. The storage container 200 includes a bottom plate 210, a first sidewall 220, a second sidewall 230, a third sidewall 240, and a fourth sidewall 250.

The bottom plate 210 has a rectangular flat plate shape, and includes a first driving circuit unit 214 and a plurality of through-holes 212. The first driving circuit unit 214 is disposed on the bottom plate 210 and drives the areal light source device 100. The through-holes 212 are formed in portions except for the portion where the first driving circuit unit 214 is disposed, and are formed through the bottom plate 210. Air may move through the through-holes 212. In the present exemplary embodiment, the through-holes 212 function as an intake unit through which external air is sucked.

The first to fourth sidewalls 220, 230, 240, and 250 extend from the edge portions of the bottom plate 210, respectively, to form a storage space and an inner space.

The first sidewall 220 is disposed on one edge portion of the bottom plate 210, and is preferably not perpendicular to the bottom plate 210. Specifically, the first sidewall 220 is inclined outwardly towards the bottom plate 210. On the contrary, the first sidewall 220 may be perpendicular to the bottom plate 210. The second to fourth sidewalls 230, 240, and 250 are respectively disposed on other edge portions of the bottom plate 210 and are perpendicular to the bottom plate 210. The second sidewall 230 is disposed adjacent to the first sidewall 220. The third sidewall 240 is disposed adjacent to the second sidewall 230 and faces the first sidewall 220. The fourth sidewall 250 is disposed adjacent to the first and third sidewalls 220 and 240, and faces the second sidewall 230.

A plurality of fans 222a are formed on the first sidewall 220. The fans 222a are operated to flow air from the inner space to the outside. Thus, the heat generated by the areal light source device 100 is transferred from the inner space to the outside. In the present exemplary embodiment, the fans 222a function as an exhaust unit for discharging internal air.

The first sidewall 220 may further include a second driving circuit unit 224. The second driving circuit unit 224 is disposed on the first sidewall 220, and may be used to drive the components of the device (e.g., the liquid crystal display panel of a liquid crystal display device) having a backlight unit 100 according to the present exemplary embodiment as the light supply part. On the contrary, the second driving circuit unit 224 may be disposed on the second to fourth sidewalls 230, 240, and 250.

Meanwhile, the first to fourth sidewalls 220, 230, 240, and 250 may be coupled to the reflective plate 110 of the areal light source device 100 in a manner of hook coupling or the like.

Hereinafter, a cooling process of the backlight unit having the above-described structure will be described in detail with reference to the drawings.

SEC et al. v. MRI
SEC Exhibit 1010.004
IPR 2023-00220

FIG. 3 is a side view for explaining a cooling process of the backlight unit of FIG. 1.

Referring to FIG. 3, the light emitting diode array substrate 110 of the areal light source device 100 is driven to generate heat. The temperature of the air remaining in the inner space 260 between the areal light source device 100 and the storage container 200 increases by the heat. The air whose temperature is increased is discharged to the outside of the backlight unit 500 by a plurality of fans 222a formed on the first sidewall 220 . When the high-temperature air is discharged to the outside of the backlight unit 1000, the pressure in the inner space 260 is lowered. Thus, low-temperature air cooler than the high-temperature air in the inner space 260 is introduced from the outside of the backlight unit 500 through the through-holes 212. Accordingly, the processes of discharging high-temperature internal air and introducing low-temperature external air are continuously repeated, and as a result, the heat generated in the areal light source device 100 is cooled by the flow of air.

In particular, the cooling process according to the present exemplary embodiment is mainly performed by the phenomenon of free convection of air. That is, the temperature of the air in the inner space 260 rises by the heat generated in the areal light source device 100, and the high-temperature air rises upward in the inner space 260 by the convection action, so that it is discharged by the fans 222a to the outside. Then, the external low-temperature air is introduced into the inner space 260 through the through-holes 212, and the temperature rises again by the heat generated from the areal light source device and increases by the convection action.

In the present exemplary embodiment, although the through-holes are formed on the bottom plate, the through-holes may be further formed in the first to fourth sidewalls, or may be formed only in the first to fourth sidewalls. That is, the through-holes may be formed on a bottom plate and in any one or more of the first to fourth sidewalls.

Also, in the present exemplary embodiment, the fans are formed on the first sidewall, but the fans may be additionally formed on a bottom plate and any one or more of the second to fourth sidewalls.

Meanwhile, in the present exemplary embodiment, the areal light source device including the light emitting diode is used as a light generator, but devices including other light sources requiring cooling may also be applied as the light generator of the present invention.

According to the present exemplary embodiment, components directly performing a cooling function are formed in the storage container of the backlight unit. Thus, the thickness and weight of the backlight unit are reduced. In addition, the cooling effect is increased by the free convection phenomenon resulting from the operation of the components. Accordingly, a decrease in luminance and contrast ratio of the backlight unit is prevented.

Exemplary Embodiment 2

FIG. 4 is an exploded perspective view of a backlight unit according to another exemplary embodiment of the present invention, and FIG. 5 is a top plan view illustrating the backlight unit of FIG. 4 from the bottom.

Referring to FIGS. 4 and 5, a backlight unit 600 includes an areal light source device 100 and a storage container 300.

Since the areal light source device 100 employed in the present exemplary embodiment has the same structure and function as the areal light source device shown in FIG. 1, a repeated description will be omitted.

The storage container 300 accommodates the areal light source device 100. The storage container 300 includes a bottom plate 310, a first sidewall 320, a second sidewall 330, a third sidewall 340, and a fourth sidewall 350.

The bottom plate 310 has a rectangular flat plate shape, and includes a first driving circuit unit 314 and a plurality of through-holes 312. The first driving circuit unit 314 is disposed on the bottom plate 310 and drives the areal light source device 100. The through-holes 312 are formed in portions except for the portion where the first driving circuit unit 314 is disposed, and are formed through the bottom plate 310. Air may move through the through-holes 312. In the present exemplary embodiment, the through-holes 312 function as an intake unit through which external air is sucked.

The first to fourth sidewalls 320, 330, 340, and 350 extend from the edge portions of the bottom plate 310, respectively, to form a storage space and an inner space.

The first to fourth sidewalls 320, 330, 340, and 350 are respectively disposed on one edge of the bottom plate 310, and are preferably not perpendicular to the bottom plate 310. Specifically, the first to fourth sidewalls 320, 330, 340, and 350 are inclined outwardly towards the bottom plate 310. On the contrary, some or all of the first to fourth sidewalls 320, 330, 340 and 350 may be perpendicular to the bottom plate 310. The first to fourth sidewalls 320, 330, 340, and 350 are sequentially disposed adjacent to each other. The first sidewall 320 and the third sidewall 340 face each other, and the second sidewall 330 and the fourth sidewall 350 face each other.

SEC et al. v. MRI
SEC Exhibit 1010.005
IPR 2023-00220

A plurality of fans 322a, 332a, 342a, and 352a are respectively formed on the first to fourth sidewalls 320, 330, 340, and 350. The fans 322a, 332a, 342a, 352a are operated to flow air from the inner space to the outside. Therefore, the heat generated by the areal light source device 100 is transferred from the inner space to the outside. In the present exemplary embodiment, the fans 322a, 332a, 342a, and 352a function as an exhaust unit for discharging internal air.

The first sidewall 320 may further include a second driving circuit unit 324. The second driving circuit unit 324 is disposed on the first sidewall 320, and may be used to drive the components of the device (e.g., the liquid crystal display panel of a liquid crystal display device) having a backlight unit 100 according to the present exemplary embodiment as the light supply part. On the contrary, the second driving circuit unit 324 may be disposed on the second to fourth sidewalls 330, 340, and 350.

Meanwhile, the first to fourth sidewalls 320, 330, 340, and 350 may be coupled to the reflective plate 110 of the areal light source device 100 in a manner of hook coupling or the like.

Hereinafter, a cooling process of the backlight unit having the above-described structure will be described in detail with reference to the

drawings.

FIG. 6 is a side view for explaining a cooling process of the backlight unit of FIG. 4.

Referring to FIG. 6, the driving substrate 130 of the areal light source device 100 is driven to generate heat. The temperature of the air remaining in the inner space 360 between the areal light source device 100 and the storage container 300 is increased by the heat. The air with the temperature increased is discharged to the outside of the backlight unit 2000 by a plurality of fans 322a, 332a, 342a, and 352a formed on the first to fourth sidewalls 320, 330, 340, and 350. When the high-temperature air is released to the outside of the backlight unit 2000, the pressure in the inner space 360 is lowered. Thus, low-temperature air cooler than the high-temperature air in the inner space 360 is introduced from the outside of the backlight unit 2000 through the through-holes 312. Accordingly, the processes of discharging high-temperature internal air and introducing low-temperature external air are continuously repeated, and as a result, the heat generated in the areal light source device 100 is cooled by the flow of air.

In the present exemplary embodiment, the through-holes are formed on the bottom plate, but the through-holes may be further formed in the first to fourth sidewalls, or may be formed only in the first to fourth sidewalls. That is, the through-holes may be formed on a bottom plate and in any one or more of the first to fourth sidewalls.

In addition, in the present exemplary embodiment, the fans are formed on the first to fourth sidewalls, but the fans may be further formed on the bottom plate, or the fans are formed on a bottom plate and only some of the first to fourth sidewalls. That is, the fans may be formed on a bottom plate and any one or more of the first to fourth sidewalls.

Meanwhile, in the present exemplary embodiment, the areal light source device including the light emitting diode is used as a light generator, but devices including other light sources requiring cooling may also be applied as the light generator of the present invention.

According to the present exemplary embodiment, components directly performing a cooling function are formed in the storage container of the backlight unit. In particular, the fans are formed on various sidewalls of the storage container to further improve the cooling function. Thus, the thickness and weight of the backlight unit are reduced. In addition, the cooling effect is increased by the free convection phenomenon resulting from the operation of the components. Accordingly, a decrease in luminance and contrast ratio of the backlight unit is prevented.

Exemplary Embodiment 3

FIG. 7 is an exploded perspective view of a backlight unit according to still another exemplary embodiment of the present invention, and FIG. 8 is a top plan view illustrating the backlight unit of FIG. 7 from the bottom. In the third exemplary embodiment, components having the same structure and function as those in the first exemplary embodiment are denoted by the same reference numerals, and detailed descriptions thereof are omitted.

Referring to FIGS. 7 and 8 , a plurality of fans 222b are formed on the first sidewall 220. The fans 222b are operated to flow air from the outside to the inner space. Thus, the heat generated by the areal light source device 100 is cooled by the low-temperature air introduced from the outside. In the present exemplary embodiment, the fans 222b function as an intake unit for sucking external air. In addition, the fans 222b function as a cooler to actively cool the areal light source device 100.

Hereinafter, a cooling process of the backlight unit having the above-described structure will be described in detail with reference to the

SEC et al. v. MRI
SEC Exhibit 1010.006
IPR 2023-00220

drawings.

FIG. 9 is a side view illustrating a cooling process of the backlight unit of FIG. 7.

Referring to FIG. 9, the driving substrate 130 of the areal light source device 100 is driven to generate heat. The temperature of the air remaining in the inner space 260 between the areal light source device 100 and the storage container 200 may be increased by the heat. Here, the fans 222b inject low-temperature external air of the backlight unit 500 into the inner space 260 at high speed. The injected external air collides with a reflective plate 110 generating heat to cool the reflective plate 110. In the meantime, since the external air is introduced into the inside by the fans 222b, the internal pressure increases. Therefore, the air in the inner space 260 is discharged to the outside of the backlight unit 500 through the through-holes 212. Accordingly, the processes of introducing the low-temperature external air and discharging the high-temperature internal air are continuously repeated, and as a result, the heat generated in the areal light source device 100 is cooled by the flow of air.

In particular, the cooling process according to the present exemplary embodiment is mainly achieved by a forced convection phenomenon of the fans 222b functioning as the cooler. That is, the low-temperature external air introduced by the fans 222b collides at high speed with the areal light source device 100 generating heat to cool the areal light source device 100. Therefore, while the fans 222a according to the first exemplary embodiment described above have a passive function of discharging the high-temperature air of the inner space 260 to the outside, the fans 222b according to the present exemplary embodiment function actively as the cooler. In general, the heat transfer effect by a forced convection phenomenon is greater than the heat transfer effect by a free convection phenomenon. Therefore, cooling according to the present exemplary embodiment can be more effective.

In the present exemplary embodiment, the through-holes are formed on a bottom plate, but the through-holes may be additionally formed in the first to fourth sidewalls, or may be formed only in the first to fourth sidewalls. That is, the through-holes may be formed on the bottom plate and in any one or more of the first to fourth sidewalls.

Also, in the present exemplary embodiment, the fans are formed on the first sidewall, but the fans may be additionally formed on a bottom plate and any one or more of the second to fourth sidewalls.

Meanwhile, in the present exemplary embodiment, the areal light source device including the light emitting diode is used as a light generator, but devices including other light sources requiring cooling may also be applied as the light generator of the present invention.

According to the present exemplary embodiment, components directly performing a cooling function are formed in the storage container of the backlight unit. Thus, the thickness and weight of the backlight unit are reduced. In addition, in the present exemplary embodiment, the cooling effect is increased by the forced convection phenomenon resulting from the operation of the components. Accordingly, a decrease in luminance and contrast ratio of the backlight unit is prevented.

Exemplary Embodiment 4

FIG. 10 is an exploded perspective view of a backlight unit according to still another exemplary embodiment of the present invention, and FIG. 11 is a top plan view illustrating the backlight unit of FIG. 10 from the bottom. In the fourth exemplary embodiment, components having the same structure and function as those in the second exemplary embodiment are denoted by the same reference numerals, and detailed descriptions thereof are omitted.

Referring to FIGS. 10 and 11, a plurality of fans 322b, 332b, 342b, and 352b are respectively formed on the first to fourth sidewalls 320, 330, 340, and 350. The fans 322b, 332b, 342b, and 352b may cool the heat generated by the areal light source device 100 by sucking low-temperature external air. In the present exemplary embodiment, the fans 322b, 332b, 342b, and 352b function as an intake unit for sucking external air. In addition, the fans 322b, 332b, 342b, and 352b function as a cooler for actively cooling the areal light source device 100.

Hereinafter, a cooling process of the backlight unit having the above-described structure will be described in detail with reference to the

drawings.

FIG. 12 is a side view for explaining a cooling process of the backlight unit of FIG. 10.

Referring to FIG. 12, the driving substrate 130 of the areal light source device 100 is driven to generate heat. The temperature of the air remaining in an inner space 360 between the areal light source device 100 and the storage container 300 may be increased by the heat. Here, the fans 322b, 332b, 342b, and 352b inject low-temperature external air of the backlight unit 600 into the inner space 360 at high speed. The injected external air collides with a reflective plate 110 generating heat to cool the reflective plate 110. In the meantime, since the external air is introduced into the inside by the fans 322b, 332b, 342b, and 352b, the internal pressure increases. Therefore, the air in the inner space 360 is discharged to the outside of the backlight unit 600 through the through-holes 312. Accordingly, the processes of

SEC et al. v. MRI
SEC Exhibit 1010.007
IPR 2023-00220

introducing the low-temperature external air and discharging the high-temperature internal air are continuously repeated, and as a result, the heat generated in the areal light source device 100 is cooled by the flow of air.

In the present exemplary embodiment, the through-holes are formed on a bottom plate, but the through-holes may be additionally formed in the first to fourth sidewalls, or may be formed only in the first to fourth sidewalls. That is, the through-holes may be formed on the bottom plate and in any one or more of the first to fourth sidewalls.

In addition, in the present exemplary embodiment, the fans are formed on the first to fourth sidewalls, but the fans may be further formed on the bottom plate, or the fans are formed on a bottom plate and only some of the first to fourth sidewalls. That is, the fans may be formed on a bottom plate and any one or more of the first to fourth sidewalls.

Meanwhile, in the present exemplary embodiment, the areal light source device including the light emitting diode is used as a light generator, but devices including other light sources requiring cooling may also be applied as the light generator of the present invention.

According to the present exemplary embodiment, components directly performing a cooling function are formed in the storage container of the backlight unit. In particular, the fans are formed on various sidewalls of the storage container to further improve the cooling function. Therefore, the thickness and weight of the backlight unit are reduced. In addition, the cooling effect is increased by the forced convection phenomenon resulting from the operation of the components. Accordingly, a decrease in luminance and contrast ratio of the backlight unit is prevented.

Liquid Crystal Display Device

Exemplary Embodiment 5

FIG. 13 is an exploded perspective view illustrating a liquid crystal display device having the backlight unit of FIG. 1.

Referring to FIG. 13, a liquid crystal display device 800 includes a backlight unit 500, a liquid crystal display panel 840, and a chassis 860.

Since the backlight unit 500 employed in the present exemplary embodiment has the same structure and function as the backlight unit shown in FIG. 1, a repeated description thereof will be omitted.

The liquid crystal display panel 840 displays an image using the light emitted from an areal light source device 100. The liquid crystal display panel 840 includes a thin film transistor (TFT) substrate 842, a liquid crystal 844, a color filter substrate 846, and a driving module 848.

The TFT substrate 842 includes pixel electrodes (not shown) arranged in a matrix form, a thin film transistor (not shown) for applying a driving voltage to each of the pixel electrodes, a gate line (not shown), and a data line (not shown).

The color filter substrate 846 includes a color filter (not shown) disposed to face the pixel electrodes formed on the TFT substrate 842 and a common electrode (not shown) formed on the color filter.

The liquid crystal 844 is interposed between the TFT substrate 842 and the color filter substrate 846.

The driving module 848 drives the liquid crystal display panel 840. On the contrary, a second driving circuit unit 224 may be disposed on a bottom plate 210 and any one of the first to fourth sidewalls 220, 230, 240, and 250 to drive the liquid crystal display panel 840.

The edge portion of the color filter substrate 846 is surrounded by the chassis 860, and a portion of the chassis 860 is coupled to a storage container 200. The chassis 860 prevents the cracking of the liquid crystal display panel 840, which is vulnerable to external shock, and causes the liquid crystal display panel 840 not to move.

The liquid crystal display 800 may further include an optical sheet 820 for improving luminance uniformity of the light emitted from the areal light source device 100. The optical sheet 820 may include a diffusion sheet, a prism sheet, a protective sheet, and the like.

A middle chassis (not shown) may be further provided above the optical sheet 820. The middle chassis is in contact with the optical sheet 820 and applies pressure to the optical sheet 820 toward the storage container 200.

According to the present exemplary embodiment, components directly performing a cooling function are formed in the storage container of the backlight unit. Thus, the thickness and weight of the backlight unit are reduced. In addition, the cooling effect is increased by the free convection phenomenon resulting from the operation of the components. Accordingly, the thickness and weight of a liquid crystal display

SEC et al. v. MRI
SEC Exhibit 1010.008
IPR 2023-00220

device including the backlight unit is reduced, the cooling effect is increased, and the decrease in luminance and contrast ratio is prevented.

Exemplary Embodiment 6

FIG. 14 is an exploded perspective view illustrating a liquid crystal display device having the backlight unit of FIG. 7.

Referring to FIG. 14, a liquid crystal display device 900 includes a backlight unit 600, a liquid crystal display panel 840, and a chassis 860.

A liquid crystal display device according to the present exemplary embodiment has the same structure and function as the liquid crystal display device according to the fifth exemplary embodiment, except for the backlight unit. In addition, the backlight unit 600 employed in the present exemplary embodiment has the same structure and function as the backlight unit shown in FIG. 2.

According to the present exemplary embodiment, components directly performing a cooling function are formed in the storage container of the backlight unit. Thus, the thickness and weight of the backlight unit are reduced. In addition, the cooling effect is increased by a forced convection phenomenon resulting from the operation of the components. Accordingly, the thickness and weight of the liquid crystal display device including the backlight unit is reduced, the cooling effect is increased, and the decrease in luminance and contrast ratio is prevented.

Effects of the Invention

As described above, according to the present exemplary embodiment, components directly performing a cooling function are formed in the storage container of a backlight unit. Thus, the thickness and weight of the backlight unit are reduced.

In addition, the cooling effect is increased by a free convection phenomenon or a forced convection phenomenon resulting from the operation of the components.

Accordingly, the thickness and weight of a liquid crystal display device including the backlight unit is reduced, the cooling effect is increased, and the decrease in luminance and contrast ratio is prevented.

Although the detailed description of the present invention given above has been provided with reference to a preferred exemplary embodiment of the present invention, those skilled in the art or those having ordinary knowledge in the art may understand that the present invention can be modified or changed in a various manner to the extent that it does not deviate from the spirit and the area of the art of the present invention described later in What Is Claimed Is.

(57) What Is Claimed Is:

Claim 1.

A backlight unit, comprising a light generator that generates light; and

a storage container where the light generator is accommodated and an intake unit through which external air is sucked and an exhaust unit through which internal air is discharged are formed.

Claim 2.

The backlight unit of claim 1, wherein the storage container provides a bottom plate and a storage space for accommodating the light generator, including a plurality of sidewalls being extended from an edge portion of the bottom plate.

Claim 3.

The backlight unit of claim 2, wherein the sidewalls comprise a first sidewall, a second sidewall disposed adjacent to the first sidewall, a third sidewall disposed adjacent to the second sidewall and opposite the first sidewall, and a fourth sidewall disposed adjacent to the first and third sidewalls and facing the second sidewall.

SEC et al. v. MRI
SEC Exhibit 1010.009
IPR 2023-00220

Claim 4.

The backlight unit of claim 3, wherein the intake unit comprises at least one through-hole formed on the bottom plate and in at least one of the first to fourth sidewalls, and the exhaust unit comprises at least one fan formed on the bottom plate and at least one of the first to fourth sidewalls.

Claim 5.

The backlight unit of claim 4, wherein the through-hole is formed through the bottom plate, and the fan is formed on the first sidewall.

Claim 6.

The backlight unit of claim 5, wherein the first sidewall is inclined outwardly towards the bottom plate.

Claim 7.

The backlight unit of claim 4, wherein the fan is formed on the first to fourth sidewalls, respectively.

Claim 8.

The backlight unit of claim 2, further comprising a first driving circuit unit disposed on a bottom plate and any one of the sidewalls of the storage container to drive the light generator.

Claim 9.

The backlight unit of claim 1, wherein the light generator is an areal light source device.

Claim 10.

The backlight unit of claim 9, wherein the areal light source device comprises a light emitting diode light source.

Claim 11.

The backlight unit of claim 10, wherein the areal light source device further comprises a reflective plate disposed between the storage container and the light emitting diode light source.

Claim 12.

A backlight unit, comprising a light generator that generates light; and

a storage container where the light generator is accommodated and an intake unit through which external air is sucked and an exhaust unit through which internal air is discharged are formed.

SEC et al. v. MRI
SEC Exhibit 1010.010
IPR 2023-00220

Claim 13.

The backlight unit of claim 12, wherein the storage container provides a storage space for accommodating the light generator by including a bottom plate and a plurality of sidewalls extending from an edge portion of the bottom plate, and the sidewalls comprise a first sidewall, a second sidewall disposed adjacent to the first sidewall, a third sidewall disposed adjacent to the second sidewall and opposite the first sidewall, and a fourth sidewall disposed adjacent to the first and third sidewalls and facing the second sidewall.

Claim 14.

The backlight unit of claim 13, wherein the exhaust unit comprises at least one through-hole formed on the bottom plate and in at least one of the first to fourth sidewalls of the storage container, and the intake unit comprises at least one fan formed on the bottom plate and at least one of the sidewalls.

Claim 15.

The backlight unit of claim 14, wherein the through-hole is formed through the bottom plate, and the fan is formed on the first sidewall.

Claim 16.

The backlight unit of claim 15, wherein the first sidewall is inclined outwardly towards the bottom plate.

Claim 17.

The backlight unit of claim 13, further comprising a first driving circuit unit disposed on a bottom plate and any one of the sidewalls of the storage container to drive the light generator.

Claim 18.

The backlight unit of claim 12, wherein the light generator is an areal light source device including a light emitting diode light source.

Claim 19.

The backlight unit of claim 18, wherein the areal light source device further comprises a reflective plate disposed between the storage container and the light emitting diode light source.

Claim 20.

A liquid crystal display device, comprising a backlight unit containing a light generator emitting light and a storage container which accommodates the light generator and in which an intake unit for sucking external air and an exhaust unit for discharging internal air are formed; and

a liquid crystal display panel that uses the light emitted from the light generator to display an image.

Claim 21.

SEC et al. v. MRI
SEC Exhibit 1010.011
IPR 2023-00220

The liquid crystal display device of claim 20, wherein the storage container comprises a bottom plate and a plurality of sidewalls; the intake unit comprises one or more through-holes formed through the bottom plate and at least one of the sidewalls; and the exhaust unit comprises one or more fans formed on the bottom plate and at least one of the sidewalls.

Claim 22.

The liquid crystal display device of claim 21, wherein the through-holes are formed through the bottom plate and the fans are formed on a first sidewall inclined outwardly towards the bottom plate among the sidewalls.

Claim 23.

The liquid crystal display device of claim 22, wherein the fans are formed on the sidewalls respectively and each of the sidewalls is inclined outwardly towards the bottom plate.

Claim 24.

The liquid crystal display device of claim 20, wherein the light generator is an areal light source device comprising a light emitting diode light source.

Claim 25.

The liquid crystal display device of claim 20, further comprising a first driving circuit unit disposed on the bottom plate and any one of the sidewalls to drive the light generator; and a second driving circuit unit disposed on the bottom plate and any one of the sidewalls to drive the liquid crystal display panel.

Claim 26.

The liquid crystal display device of claim 25, wherein the first driving circuit unit is disposed on a bottom plate of the storage container, and the second driving circuit unit is disposed on a first sidewall inclined outwardly towards the bottom plate among the side walls.

Claim 27.

A liquid crystal display device, comprising a backlight unit containing a light generator emitting light and a storage container which accommodates the light generator and in which an intake unit for sucking external air and an exhaust unit for discharging internal air are formed; and

a liquid crystal display panel that uses the light emitted from the light generator to display an image.

Claim 28.

The liquid crystal display device of claim 27, wherein the storage container comprises a bottom plate and a plurality of sidewalls; the exhaust unit comprises one or more through-holes formed through the bottom plate and at least one of the sidewalls; and the intake unit comprises one or more fans formed on the bottom plate and at least one of the sidewalls.

Drawing

SEC et al. v. MRI
SEC Exhibit 1010.012
IPR 2023-00220

FIG. 1

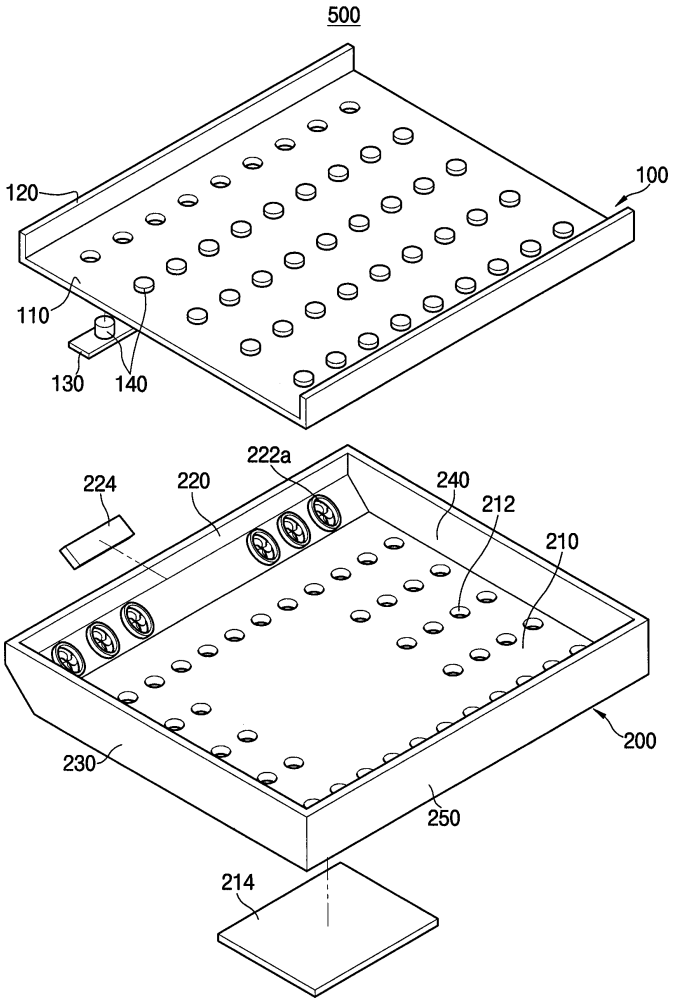

SEC et al. v. MRI
SEC Exhibit 1010.013
IPR 2023-00220

FIG. 2

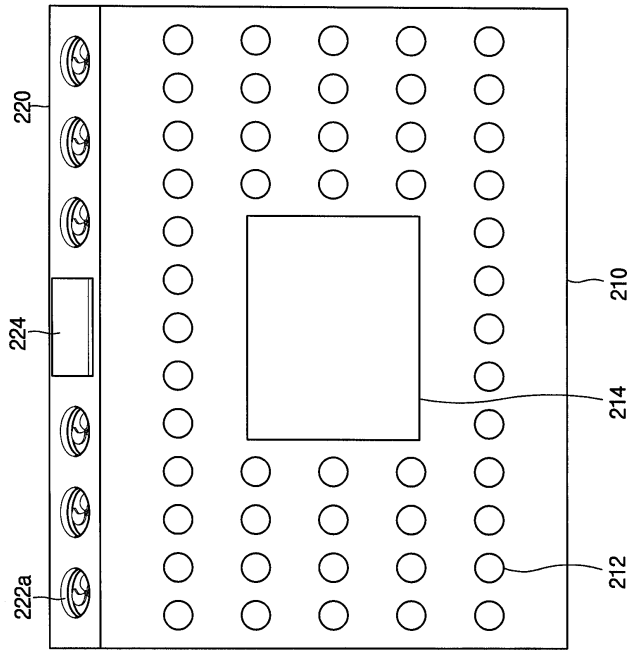

FIG. 3

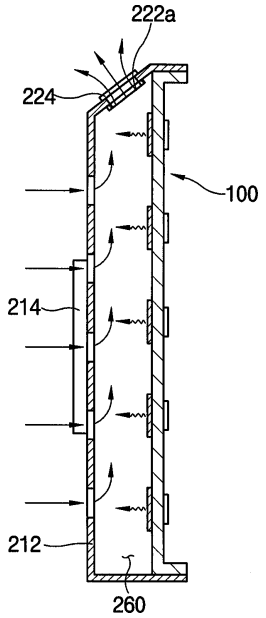

SEC et al. v. MRI
SEC Exhibit 1010.014
IPR 2023-00220

FIG. 4

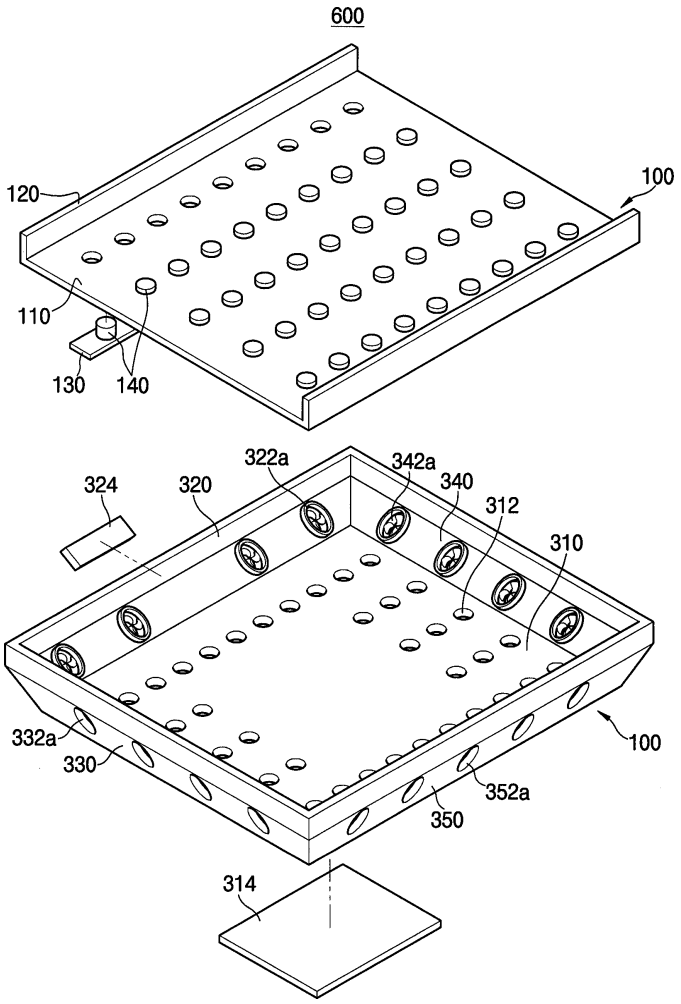

SEC et al. v. MRI
SEC Exhibit 1010.015
IPR 2023-00220

FIG. 5

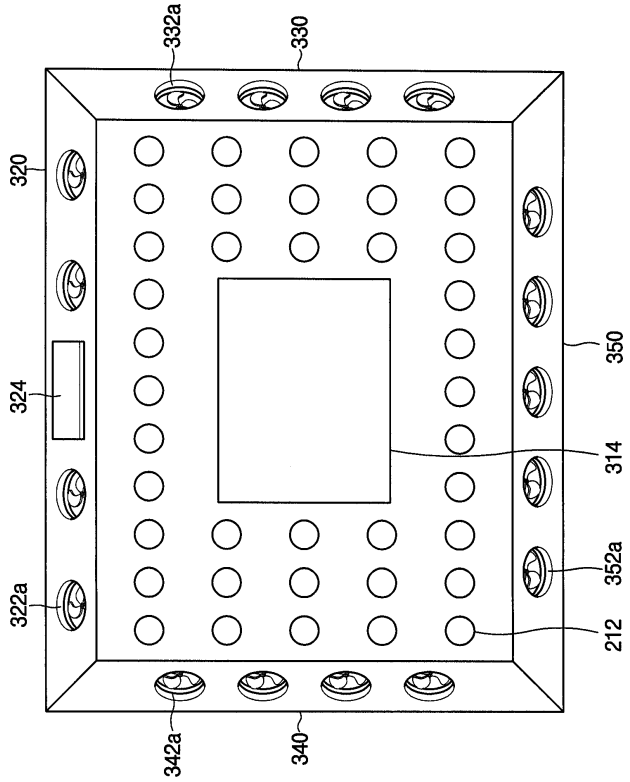

FIG. 6

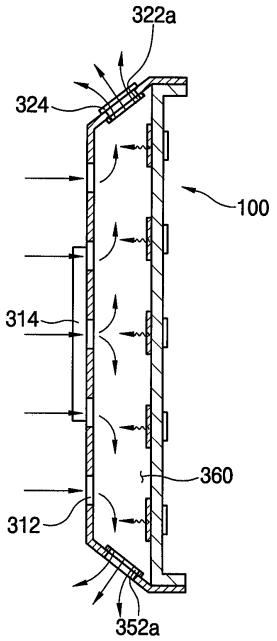

SEC et al. v. MRI
SEC Exhibit 1010.016
IPR 2023-00220

FIG. 7

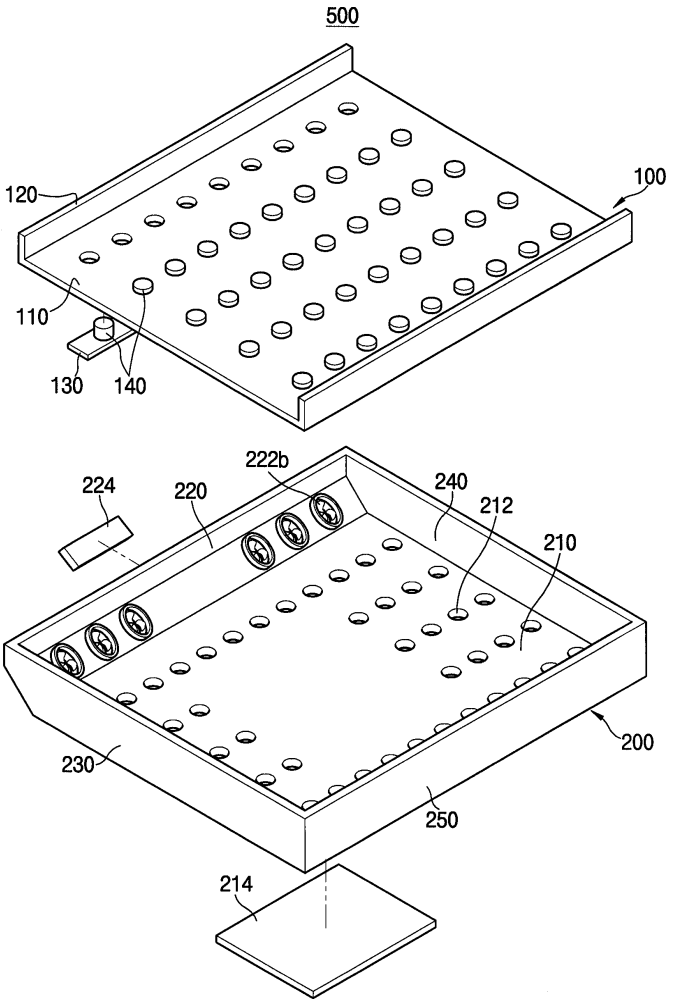

SEC et al. v. MRI
SEC Exhibit 1010.017
IPR 2023-00220

FIG. 8

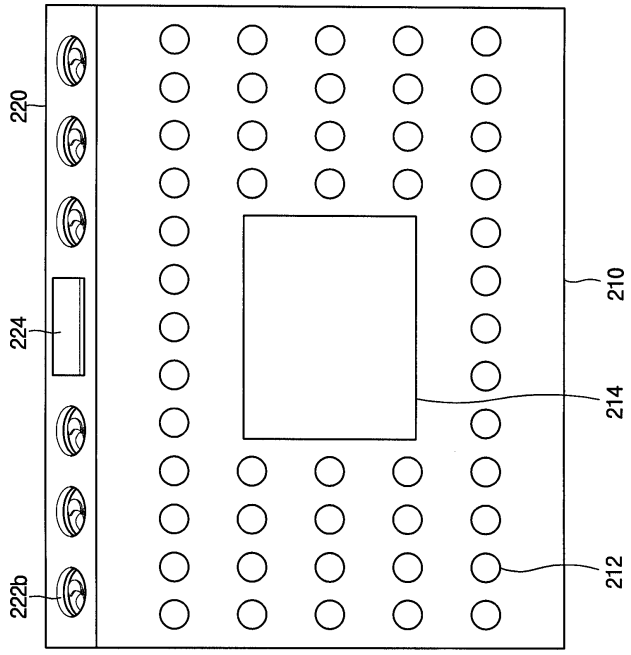

FIG. 9

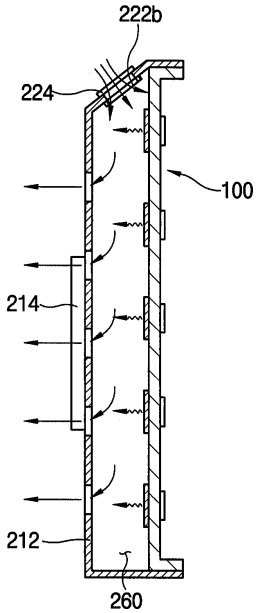

SEC et al. v. MRI
SEC Exhibit 1010.018
IPR 2023-00220

FIG. 10

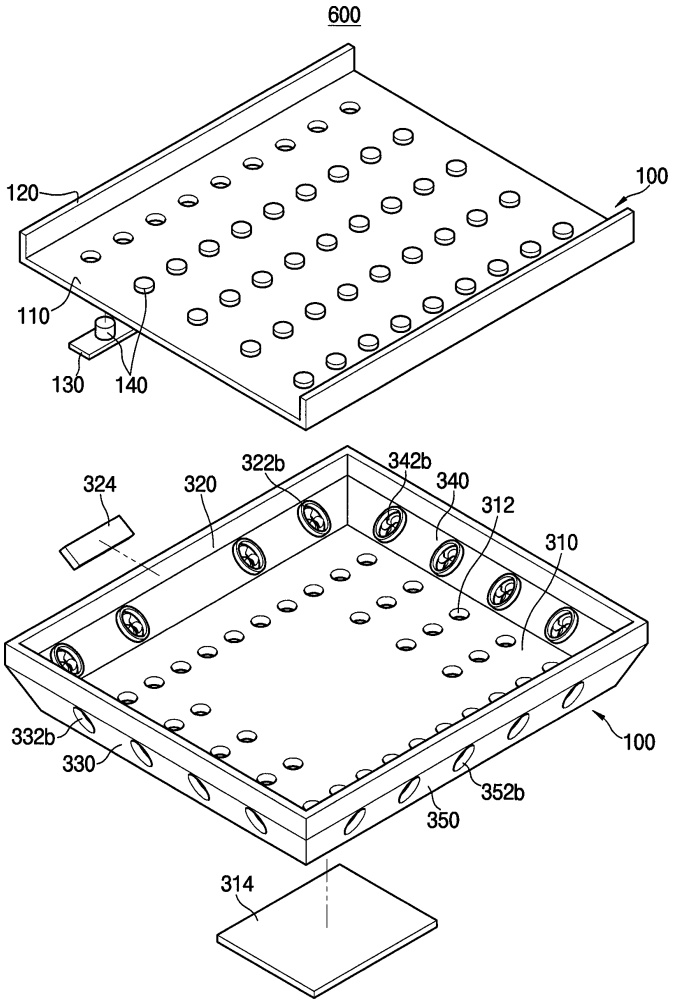

SEC et al. v. MRI
SEC Exhibit 1010.019
IPR 2023-00220

FIG. 11

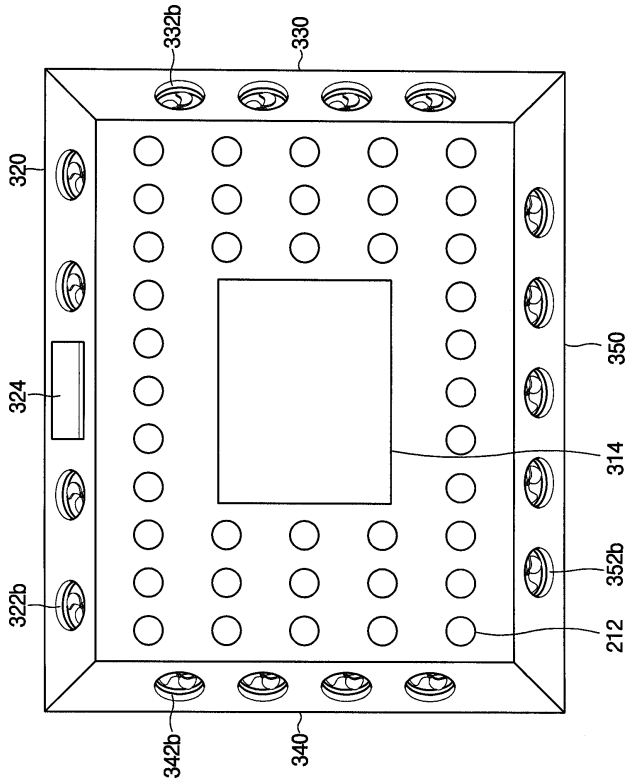

FIG. 12

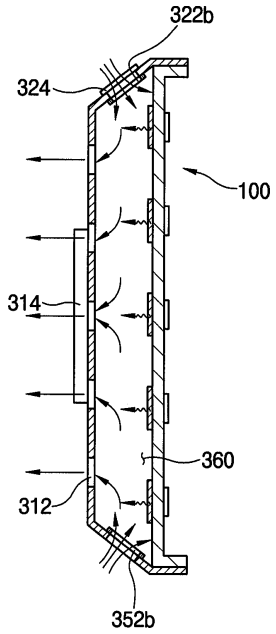

SEC et al. v. MRI
SEC Exhibit 1010.020
IPR 2023-00220

FIG. 13

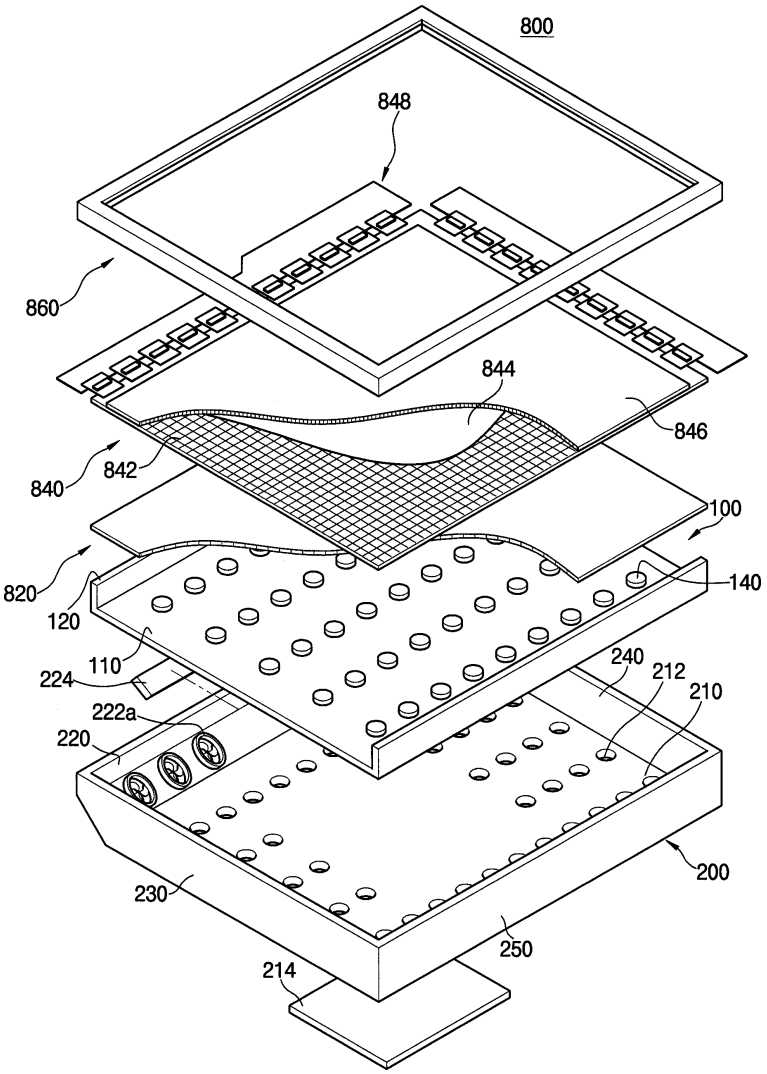

SEC et al. v. MRI
SEC Exhibit 1010.021
IPR 2023-00220

FIG. 14

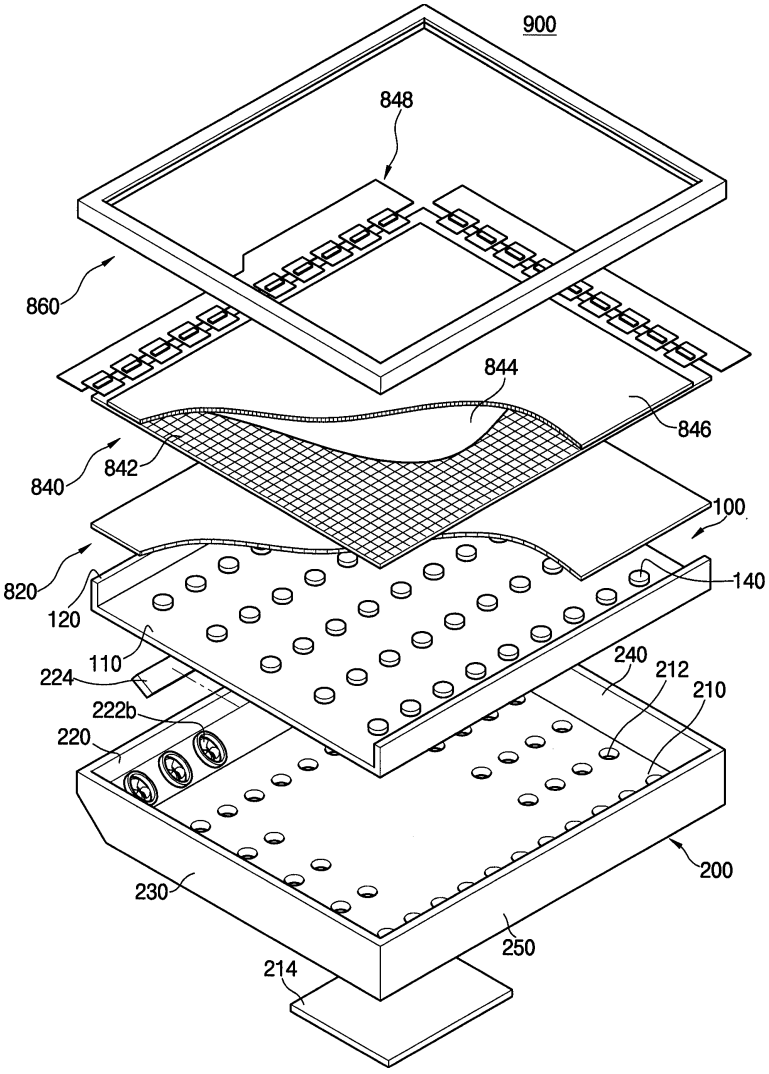

SEC et al. v. MRI
SEC Exhibit 1010.022
IPR 2023-00220

CERTIFICATE OF TRANSLATION

I, Dan McCourt, hereby certify that the document identified below, translated from Korean into English, is true and accurate, to the best of my knowledge and belief.

Reference: KR 2006-0016469

I declare under penalty of perjury under the laws of the United States of America that the foregoing is true and correct. I hereby declare that all statements made herein of my own knowledge are true and that all statements made on information and belief are believed to be true; and further that these statements were made with the knowledge that willful false statements and the like so made are punishable by fine or imprisonment, or both, under Section 1001 of Title 18 of the United States Code.

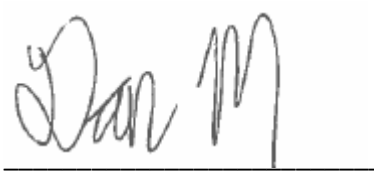

Dan McCourt

Sworn to before me this
15th day of November 2022

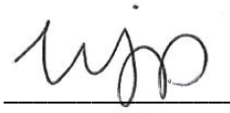

Signature, Notary Public

Stamp, Notary Public