Cooling Techniques for Electronic Equipment

DAVE S. STEINBERG

SEC et al. v. MRI
SEC Exhibit 1020.001
IPR 2023-00220

Cooling Techniques for Electronic Equipment

SEC et al. v. MRI
SEC Exhibit 1020.002
IPR 2023-00220

Cooling Techniques for Electronic Equipment

DAVE S. STEINBERG

Manager, Mechanical Engineering
Design Analysis Section
Litton Guidance and Control Systems
Woodland Hills, California

A WILEY-INTERSCIENCE PUBLICATION

JOHN WILEY & SONS, New York • Chichester • Brisbane • Toronto • Singapore

SEC et al. v. MRI
SEC Exhibit 1020.003
IPR 2023-00220

Copyright © 1980 by John Wiley & Sons, Inc.

All rights reserved. Published simultaneously in Canada.

Reproduction or translation of any part of this work beyond that permitted by Sections 107 or 108 of the 1976 United States Copyright Act without the permission of the copyright owner is unlawful. Requests for permission or further information should be addressed to the Permissions Department, John Wiley & Sons, Inc.

Library of Congress Cataloging in Publication Data:

Steinberg, Dave S 1923-
Cooling techniques for electronic equipment.

"A Wiley-Interscience publication."
Includes index.
1. Electronic apparatus and appliances—Cooling.

I. Title.
TK7870.25.S73 621.381 80-14141
ISBN 0-471-04403-2

Printed in the United States of America

10

SEC et al. v. MRI
SEC Exhibit 1020.004
IPR 2023-00220

To My Wife Annette
And To My Two Daughters Cori and Stacie

Preface

Electronic equipment is slowly reaching into almost every phase of modern living, from sewing machines and washing machines to mass transportation and atomic energy control systems. The reliability of these systems is of great importance to our comfort and safety. If a transistor fails in a television set, it may only cause a minor inconvenience. However, if an electronic control system should malfunction because it has overheated, it may result in substantial property damage and possible injury.

Electronic systems are rapidly shrinking in size, while their complexity and capability continue to grow at an amazing rate. As the power has been increasing, the volume has been decreasing, resulting in a dramatic increase in the heat density. As a result, the temperatures in many electronic systems have been rising rapidly, producing a large increase in the number of failures.

High failure rates in electronic boxes may also be caused by high thermal stresses in the solder joints of electronic components mounted on circuit boards. This is usually due to a high thermal expansion coefficient with insufficient strain relief in the component lead wire. This area is discussed in detail, together with recommendations for mounting components to prevent this type of failure.

The purpose of this book is to show designers and engineers quick methods for designing electronic hardware to withstand severe thermal environments without failing. Techniques are presented that will permit the development of many different types of reliable electronic systems *without* the aid of the powerful new high speed digital computers.

This book was developed from a series of seminars, lectures, and short courses for the cooling of electronic equipment, which I have presented at the University of Wisconsin–Extension every year since 1975. The book was influenced by my industrial experience in the mechanical design, packaging, and testing of many different types of sophisticated electronic components and systems during the past 25 years.

Mathematical modeling techniques using analog resistor networks are also included. For those who wish to use high speed digital computers to

SEC et al. v. MRI
SEC Exhibit 1020.006
IPR 2023-00220

solve thermal problems, these techniques can be used to break up a complex system into many individual thermal resistors and nodes.

In an attempt to keep the book as simple as possible, the derivations of equations were minimized. The emphasis is always on the real electronic hardware that is used in today's sophisticated electronic systems. Many sample problems are presented, to demonstrate practical and cost effective methods for designing efficient, reliable cooling systems.

Although the metric system for weights and measures is widely used in Europe, at the present time it is used by only a few American companies. However, there appears to be a strong movement toward conversion from the present English system to the metric system. This book was therefore written with dual units, English and metric, to permit electronic equipment designers and engineers to work with either set of units effectively.

I thank Mr. Joel Newberger for his contributions in the section on induced draft cooling, and Mr. Joel Sloan for proofreading several sections of the book.

DAVE S. STEINBERG

Westlake Village, California
August 1980

SEC et al. v. MRI
SEC Exhibit 1020.007
IPR 2023-00220

Contents

Preface vii

Symbols xvii

1 Evaluating the Cooling Requirements 1

1.1 Heat Sources, 1
1.2 Heat Transmission, 2
1.3 Steady State Heat Transfer, 4
1.4 Transient Heat Transfer, 5
1.5 Electronic Equipment for Airplanes, Missiles, Satellites, and Spacecraft, 6
1.6 Electronic Equipment for Ships and Submarines, 8
1.7 Electronic Equipment for Communication Systems and Ground Support Systems, 9
1.8 Minicomputers, Microcomputers, and Microprocessors, 10
1.9 Cooling Specifications for Electronics, 11
1.10 Specifying the Power Dissipation, 12
1.11 Dimensional Units and Conversion Factors, 14

2 Designing the Electronic Chassis 21

2.1 Formed Sheet Metal Electronic Assemblies, 21
2.2 Dip Brazed Boxes with Integral Cold Plates, 22
2.3 Plaster Mold and Investment Castings with Cooling Fins, 24
2.4 Die Cast Housings, 25

SEC et al. v. MRI
SEC Exhibit 1020.008
IPR 2023-00220

2.5 Large Sand Castings, 26
2.6 Extruded Sections for Large Cabinets, 26
2.7 Humidity Considerations in Electronic Boxes, 26
2.8 Conformal Coatings, 28
2.9 Sealed Electronic Boxes, 29
2.10 Standard Electronic Box Sizes, 33

3 Conduction Cooling for Chassis and Circuit Boards 35

3.1 Concentrated Heat Sources, Steady State Conduction, 35
3.2 Mounting Electronic Components on Brackets, 36
3.3 Sample Problem—Transistor Mounted on a Bracket, 39
3.4 Uniformly Distributed Heat Sources, Steady State Conduction, 41
3.5 Sample Problem—Cooling Integrated Circuits on a PCB, 44
3.6 Circuit Board with an Aluminum Heat Sink Core, 46
3.7 Sample Problem—Temperature Rise along a PCB Heat Sink Plate, 46
3.8 How to Avoid Warping on PCBs with Metal Heat Sinks, 47
3.9 Chassis with Nonuniform Wall Sections, 48
3.10 Sample Problem—Heat Flow along Nonuniform Bulkhead, 50
3.11 Two Dimensional Analog Resistor Networks, 53
3.12 Sample Problem—Two Dimensional Conduction on a Power Supply Heat Sink, 54
3.13 Heat Conduction across Interfaces in Air, 60
3.14 Sample Problem—Temperature Rise across a Bolted Interface, 64
3.15 Sample Problem—Temperature Rise across a Small Air Gap, 65
3.16 Heat Conduction across Interfaces at High Altitudes, 66
3.17 Outgassing at High Altitudes, 69
3.18 Circuit Board Edge Guides, 70

SEC et al. v. MRI
SEC Exhibit 1020.009
IPR 2023-00220

3.19 Sample Problem—Temperature Rise across a PCB Edge Guide, 72

3.20 Heat Conduction through Sheet Metal Covers, 72

3.21 Radial Heat Flow, 73

3.22 Sample Problem—Temperature Rise through a Cylindrical Shell, 74

4 Mounting and Cooling Techniques for Electronic Components 77

4.1 Various Types of Components, 77

4.2 Mounting Components on PCBs, 78

4.3 Sample Problem—Hot Spot Temperature of an Integrated Circuit on a Plug-in PCB, 81

4.4 How to Mount High Power Components, 87

4.5 Sample Problem—Mounting High Power Transistors on a Heat Sink Plate, 89

4.6 Electrically Isolating High Power Components, 91

4.7 Sample Problem—Mounting a Transistor on a Heat Sink Bracket, 92

4.8 Potted Modules, 94

4.9 Sample Problem—Temperature Rise in a Potted Module, 95

4.10 Component Lead Wire Strain Relief, 98

5 Practical Guides for Natural Convection and Radiation Cooling 106

5.1 How Natural Convection Is Developed, 106

5.2 Natural Convection for Flat Vertical Plates, 109

5.3 Natural Convection for Flat Horizontal Plates, 109

5.4 Heat Transferred by Natural Convection, 110

5.5 Sample Problem—Vertical Plate Natural Convection, 111

5.6 Turbulent Flow with Natural Convection, 113

5.7 Sample Problem—Heat Lost from an Electronic Box, 114

5.8 Finned Surfaces for Natural Convection Cooling, 117

5.9 Sample Problem—Cooling Fins on an Electronic Box, 119

5.10 Natural Convection Analog Resistor Networks, 121

5.11 Natural Convection Cooling for PCBs, 123

SEC et al. v. MRI
SEC Exhibit 1020.010
IPR 2023-00220

5.12 Natural Convection Coefficient for Enclosed Air Space, 125

5.13 Sample Problem—PCB Adjacent to a Chassis Wall, 126

5.14 High Altitude Effects on Natural Convection, 129

5.15 Sample Problem—PCB Cooling at High Altitudes, 130

5.16 Radiation Cooling of Electronics, 132

5.17 Radiation View Factor, 136

5.18 Sample Problem—Radiation Heat Transfer from a Hybrid, 142

5.19 Sample Problem—Junction Temperature of a Dual FET Switch, 145

5.20 Radiation Heat Transfer in Space, 147

5.21 Effects of α/e on Temperatures in Space, 148

5.22 Sample Problem—Temperatures of an Electronic Box in Space, 150

5.23 Simplified Radiation Heat Transfer Equation, 151

5.24 Sample Problem—Radiation Heat Loss from an Electronic Box, 152

5.25 Combining Convection and Radiation Heat Transfer, 154

5.26 Sample Problem—Electronic Box in an Airplane Cockpit Area, 155

5.27 Equivalent Ambient Temperature for Reliability Predictions, 157

5.28 Sample Problem—Equivalent Ambient Temperature of an RC07 Resistor, 159

5.29 Increase in Effective Emittance on Extended Surfaces, 160

6 Forced Air Cooling for Electronics **164**

6.1 Forced Cooling Methods, 164

6.2 Cooling Air Flow Direction for Fans, 165

6.3 Static Pressure and Velocity Pressure, 166

6.4 Losses Expressed in Terms of Velocity Heads, 170

6.5 Sample Problem—Air Flow Loss at a Fan Entrance, 171

6.6 Establishing the Flow Impedance Curve for an Electronic Box, 172

SEC et al. v. MRI
SEC Exhibit 1020.011
IPR 2023-00220

6.7 Sample Problem—Fan Cooled Electronic Box, 173
6.8 Hollow Core PCBs, 189
6.9 Cooling Air Fans for Electronic Equipment, 192
6.10 Air Filters, 194
6.11 Cutoff Switches, 195
6.12 Static Pressure Loss Tables and Charts, 195
6.13 High Altitude Conditions, 196
6.14 Sample Problem—Fan Cooled Box at 30,000 Feet, 199
6.15 Other Convection Coefficients, 203
6.16 Sample Problem—Cooling A TO-5 Transistor, 205
6.17 Conditioned Cooling Air from an External Source, 207
6.18 Sample Problem—Generating a Cooling Air Flow Curve, 208
6.19 Static Pressure Losses for Various Altitude Conditions, 209
6.20 Sample Problem—Static Pressure Drop at 65,000 Feet, 212
6.21 Total Pressure Drop for Various Altitude Conditions, 218
6.22 Sample Problem—Total Pressure Loss through an Electronic Box, 219
6.23 Finned Cold Plates and Heat Exchangers, 219
6.24 Pressure Losses in Multiple Fin Heat Exchangers, 221
6.25 Fin Efficiency Factor, 223
6.26 Sample Problem—Hollow Core PCB with a Finned Heat Exchanger, 225
6.27 Undesirable Air Flow Reversals, 239

7 Cooling Minicomputers, Microcomputers, and Microprocessors 242

7.1 Introduction, 242
7.2 Minicomputer Systems, 242
7.3 Sample Problem—PCB Mounted above a Minicomputer Floppy Disk, 244
7.4 Sample Problem—Fan Cooled Minicomputer, 249
7.5 Microcomputer Systems, 252
7.6 Sample Problem—Cooling a Microcomputer, 253

SEC et al. v. MRI
SEC Exhibit 1020.012
IPR 2023-00220

7.7 Microprocessor Development, 255

7.8 Mounting Microprocessors to Resist Vibration Fatigue, 256

7.9 Microprocessors in Severe Thermal Environments, 257

7.10 Sample Problem—Cooling a Microprocessor Mounted on a PCB, 257

8 Effective Cooling for Large Racks and Cabinets 260

8.1 Induced Draft Cooling for Large Consoles, 260

8.2 Air Flow Losses for Large Cabinets, 261

8.3 Flotation Pressure and Pressure Loss, 262

8.4 Sample Problem—Induced Draft Cooling for a Large Cabinet, 262

8.5 Natural Cooling for Large Cabinets with Many Flow Restrictions, 267

8.6 Sample Problem—Temperature Rise of Cooling Air in a Cabinet with an Induced Draft, 268

8.7 Warning Note for Induced Draft Systems, 272

8.8 Tall Cabinets with Stacked Card Buckets, 273

8.9 Sample Problem—Induced Draft Cooling of a Console with Seven Stacked Card Buckets, 274

8.10 Electronics Packaged within Sealed Enclosures, 278

8.11 Small Enclosed Modules within Large Consoles, 281

8.12 Sample Problem—Small PCB Sealed within an RFI Enclosure, 283

8.13 Test Data for Small Enclosed Modules, 290

8.14 Pressure Losses in Series and Parallel Air Flow Ducts, 293

8.15 Sample Problem—Series and Parallel Air Flow Network, 294

9 Transient Cooling for Electronic Systems 300

9.1 Simple Insulated Systems, 300

9.2 Sample Problem—Transient Temperature Rise of a Transformer, 301

9.3 Thermal Capacitance, 302

SEC et al. v. MRI
SEC Exhibit 1020.013
IPR 2023-00220

9.4 Time Constant, 303
9.5 Heating Cycle Transient Temperature Rise, 304
9.6 Sample Problem—Transistor on a Heat Sink, 304
9.7 Temperature Rise for Different Time Constants, 308
9.8 Sample Problem—Time for Transistor to Reach 95% of its Stabilized Temperature, 310
9.9 Cooling Cycle Transient Temperature Change, 310
9.10 Sample Problem—Transistor and Heat Sink Cooling, 310
9.11 Transient Analysis for Temperature Cycling Tests, 312
9.12 Sample Problem—Electronic Chassis in a Temperature Cycling Test, 317
9.13 Sample Problem—Methods for Decreasing Hot Spot Temperatures, 322
9.14 Sample Problem—Transient Analysis of an Amplifier on a PCB, 324

10 Special Applications for Tough Cooling Jobs 331

10.1 New Technology—Approach with Caution, 331
10.2 Heat Pipes, 331
10.3 Degraded Performance in Heat Pipes, 333
10.4 Typical Heat Pipe Performance, 334
10.5 Heat Pipe Applications, 336
10.6 Direct and Indirect Liquid Cooling, 340
10.7 Forced Liquid Cooling Systems, 341
10.8 Pumps for Liquid Cooled Systems, 342
10.9 Storage and Expansion Tank, 343
10.10 Liquid Coolants, 343
10.11 Simple Liquid Cooling System, 344
10.12 Mounting Components for Indirect Liquid Cooling, 344
10.13 Basic Forced Liquid Flow Relations, 347
10.14 Sample Problem—Transistors on a Water Cooled Cold Plate, 351

References 361

Index 365

SEC et al. v. MRI
SEC Exhibit 1020.014
IPR 2023-00220

1
Evaluating the Cooling Requirements

1.1 HEAT SOURCES

Electronic equipment relies on the flow and control of electrical current to perform a fantastic variety of functions, in virtually every major industry throughout the world. Whenever electrical current flows through a resistive element, heat is generated in that element. An increase in the current or resistance produces an increase in the amount of heat that is generated in the element. The heat continues to be generated as long as the current continues to flow. As the heat builds up, the temperature of the resistive element starts to rise, unless the heat can find a flow path that carries it away from the element. If the heat flow path is poor, the temperature may continue to rise until the resistive element is destroyed and the current stops flowing. If the heat flow path is good, the temperature may rise until it stabilizes at a point where the heat flowing away from the element is equal to the heat generated by the electrical current flowing in the element.

Heat is generated by the flow of electrical current in electronic component parts such as resistors, diodes, integrated circuits (ICs), hybrids, transistors, microprocessors, relays, dual inline packages (DIPs), large scale integrated circuits (LSIs), and very large scale integrated circuits (VSIs).

Figure 1.1 shows an electronic chassis that has heat exchangers (cold plates) on the top and bottom surfaces which rely on conditioned cooling air for controlling temperatures on plug-in circuit boards.

Electronic components and electronic systems are rapidly shrinking in size while their complexity and capability continue to grow at an amazing rate. In addition, the power has been increasing while the volume has been decreasing. This has produced a dramatic increase in the power density, resulting in rapidly rising temperatures and a large increase in the number of failures.

The temperatures must be controlled on every component to ensure a reliable electronic system. If the operating temperatures become too high, electronic malfunctions may occur. Malfunctions may produce a simple out

SEC et al. v. MRI
SEC Exhibit 1020.015
IPR 2023-00220

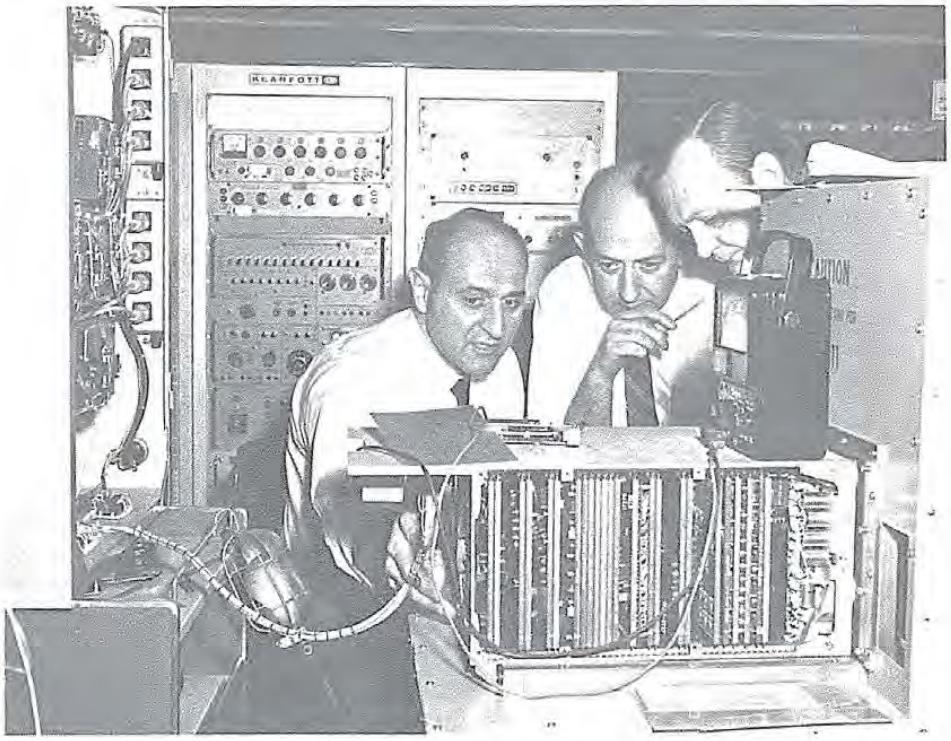

Figure 1.1 The author discussing design details with two associates. (Courtesy Kearfott Division, The Singer Co.)

of tolerance condition for a minor temperature increase, or a catastrophic failure for a major temperature increase.

Heat always flows from the hot area to the cool area. Since the electronic components are usually the source of the heat, the electronic components will usually be the hottest spots in an electronic system. (During transient conditions and temperature cycling tests, the electronic components may not necessarily be the hottest points in the system.) The basic heat transfer problem in electronic systems is, therefore, the removal of internally generated heat by providing a good heat flow path from the heat sources to an ultimate sink, which is often the surrounding ambient air.

1.2 HEAT TRANSMISSION

There are three basic methods by which heat can be transferred: conduction, convection, and radiation. The laws relating to these methods of heat transmission are of primary importance in the design and operation of electronic equipment.

SEC et al. v. MRI
SEC Exhibit 1020.016
IPR 2023-00220

Conduction is the transfer of kinetic energy from one molecule to another. In an opaque solid it is the only method of heat transfer, where heat flows from the hot areas to the cooler areas of the solid. Heat conduction also occurs in gases and liquids, but the amount of heat transferred is usually smaller for the same geometry.

Convection is the transfer of heat by the mixing action of fluids. When the mixing is due entirely to temperature differences within the fluid, resulting in different densities, the action is known as natural convection. When the mixing is produced by mechanical means, such as fans and pumps, the action is known as forced convection.

Thermal radiation is the transfer of energy by electromagnetic waves that are produced by bodies because of their temperature. A hot body radiates energy in all directions. When this energy strikes another body, the part that is absorbed is transformed into heat.

Most electronic systems make use of all three basic methods of heat transfer to some extent, even though one method may dominate the design. For example, an electronic box cooled by forced convection might utilize a fan to draw air over electronic components mounted on printed circuit boards (PCBs), as shown in Figure 1.2.

The greatest amount of heat is picked up by forced convection as the cooling air passes over the individual electronic components that are mounted on the PCB. However, some of the heat from the electronic components is conducted directly to the PCB under the component body, and some of the heat is conducted to the back side of the PCB, through the components electrical lead wires, as shown in Figure 1.3. Since the cooling

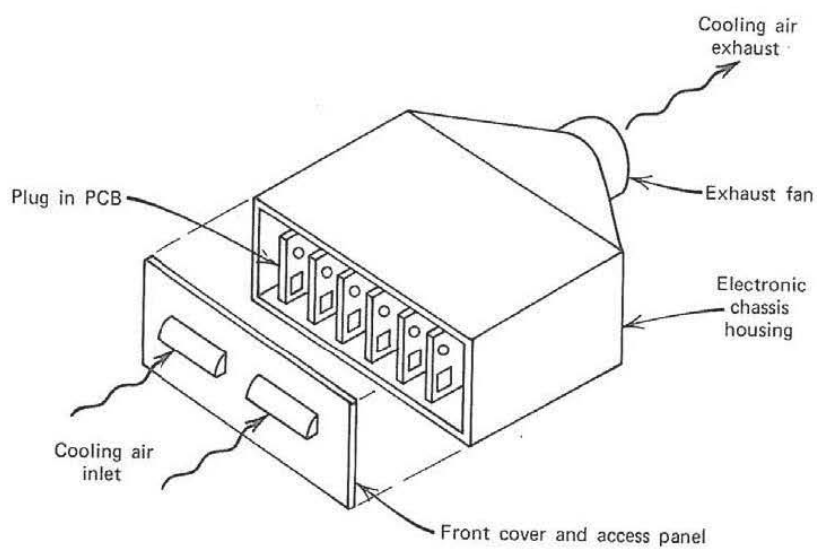

Figure 1.2 Electronic box cooled with an exhaust fan.

SEC et al. v. MRI
SEC Exhibit 1020.017
IPR 2023-00220

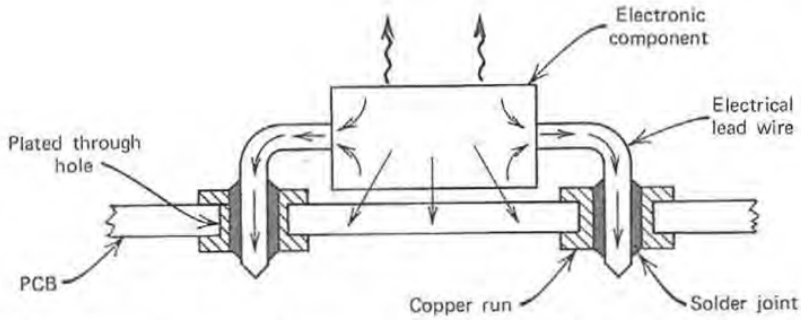

Figure 1.3 Heat conduction path from component, with heat flow through lead wires, to back side of PCB.

air passes over both surfaces of the PCB, the conduction of heat to the back side of the PCB provides additional surface area for improved cooling.

In addition, some of the heat is radiated from the hot components to the surrounding chassis walls and to the cooler spots on adjacent PCBs. This helps to reduce the component hot spot temperatures.

1.3 STEADY STATE HEAT TRANSFER

If an electronic system is turned on and left running for a very long period of time, and if the power requirements remain constant during that period, the temperatures of the electronic components and their mounting structures, such as PCBs, will usually become stable. Minor fluctuations in the line voltages, small changes in the physical properties of the individual components, and slight variations in the outside ambient conditions may have some small effects on the temperatures within the electronic system. For all practical purposes, however, the heat gained (or the power dissipated) by the electronic components is equal to the heat lost, so that the system has reached thermal equilibrium. The internal heat has found one or more thermal paths from the heat source to the ultimate heat sink. Usually, all three methods of heat transfer—conduction, convection, and radiation—are involved. When the thermal equilibrium condition has been reached, the rate of heat being transferred by each of the three methods remains constant. The temperature gradients are now fixed with the heat flowing from the hotter parts of the system to the cooler parts of the system, until the heat finally reaches the ultimate sink. These characteristics indicate that the system has reached the steady state heat transfer condition. Steady state conditions may develop in a matter of minutes for small components such as transistors and diodes. However, for large electronic consoles, it may take a full day of operation before steady state heat transfer conditions are reached.

SEC et al. v. MRI
SEC Exhibit 1020.018
IPR 2023-00220

1.4 TRANSIENT HEAT TRANSFER

When the rate of heat flow changes within an electronic system, it will normally produce a temperature change somewhere in that system. Also, when there is a temperature change within an electronic system, there will normally be a change in the heat flow rate somewhere in the system. Changes of these types are defined as transient heat transfer conditions, because the thermal equilibrium of the system is unbalanced. Transient heat transfer conditions develop, for example, when the power is first turned on in an electronic system. As the current flows through the electronic components, heat is generated and the temperatures within the components begin to rise, resulting in a transient, or changing condition.

Transient conditions will also occur in an electronic system when it is subjected to temperature cycling tests. Consider a system sitting in an environmental chamber where the ambient temperature is slowly being cycled between −54°C (−65°F) and +71°C (+160°F). In this case, the outside temperature often increases more rapidly than do the temperatures within the electronic box. Heat then flows from the outside of the box toward the interior, because heat always flows from the hot body to the cold body.

A satellite in orbit around the earth experiences transient heat transfer due to the constantly changing angle with respect to the sun and the earth. The intensity of the solar radiation may be constant, but the heat absorbed will vary along the surface because the angle the sun makes with respect to the surface is changing.

Sometimes it is necessary to use an auxiliary cooling device or technique for a short period, until the regular cooling system is available to take over the job. Consider the case where a missile is carried under the wing of an airplane. An auxiliary cooling cart is available to supply cooling to the electronic system within the missile while the airplane engine is being started and checked. The missile electronic system is normally cooled by the ram air during the captive flight phase and during the free flight phase after the missile is released from the airplane. No cooling air is provided for the missile electronics during the taxi and takeoff period, because of the extra weight and cost. Instead, the electronics must rely upon the thermal capacity or thermal inertia of the system to absorb the heat without developing excessive temperatures during this period. When a number of airplanes are lined up, waiting to take off, delays of 30 min may occur. This may cause the electronics to overheat. If the weight of the electronic system is increased, it will increase the thermal inertia and permit cooler operation for longer periods of time. For higher power systems, however, a very large mass may be required to keep the electronics cool for 30 min, so that a more sophisticated technique may be required.

Sometimes it is desirable to use the change of state from a solid to a liquid, or from a liquid to a gas, to absorb heat. A large amount of heat can

SEC et al. v. MRI
SEC Exhibit 1020.019
IPR 2023-00220

be absorbed under these conditions. It is often possible to use hollow wall construction for the electronic chassis, which could be filled with wax that melts at a predetermined temperature. The change of state from a solid to a liquid may absorb enough heat to permit the electronics to survive a 30 min period with no cooling air. Once the airplane is flying, the ram air cools the wax, which returns to the solid state. If the missile is not fired, the melting wax permits the delaying cycle to be repeated over and over again.

1.5 ELECTRONIC EQUIPMENT FOR AIRPLANES, MISSILES, SATELLITES, AND SPACECRAFT

Electronic boxes used in airplanes, missiles, satellites, and spacecraft often have odd shapes that permit them to make maximum use of the volume available in odd-shaped structures. An odd-shaped box may require more time to design, because it is usually more difficult to provide the circuit cards with an efficient heat flow path, regardless of the cooling method used.

The trend in military and commercial airplanes and helicopters is toward a series of several standard sizes for plug-in types of electronic boxes that fit in racks. These are called ATR (air transport rack) boxes. They are of various widths, which are known as one quarter, one half, three quarters, and full width, each with a short and a long length. The electrical interface connectors are often at the rear of the box, with quick release fasteners at the front [1].*

Many of the electronic boxes are cooled by forced convection with bleed air from the jet engine compressor section. Since this air is at a high temperature and pressure, it is throttled (passed through the cooling turbine), cooled, and dried with a water separator before it is used. This air often enters the electronic box at the rear, adjacent to the electrical connectors. Rubber gaskets are used around the inlet ports at the air interface to provide an effective plug-in connection, which reduces the leakage at the cooling air interface.

Sometimes the conditioned cooling air is not completely dry because of excessive moisture in the air from humidity or a rainstorm. Small drops of water will often be carried into the electronics section together with the cooling air. If this water accumulates on PCBs or their plug-in connectors, electrical problems may develop. Therefore, many specifications do not permit external cooling air to come into direct contact with electronic components or circuits.

Air cooled heat exchangers, commonly called air cooled cold plates, which are being used more and more in airplanes, provide conditioned air for cooling the electronics. These heat exchangers are usually dip brazed

* *Numbers in brackets refer to references at the end of the book.*

SEC et al. v. MRI
SEC Exhibit 1020.020
IPR 2023-00220

when many thin [0.006 to 0.008 in (0.15 to 0.20 mm)] aluminum plate fins are used. Pin fin aluminum castings are becoming very popular because of their low cost. There is usually a slight weight increase with pin fins because the walls and fins have to be thicker to permit the molten aluminum to flow [2, 3].

Electronic systems for missiles generally have two cooling conditions to consider, captive and free flight. If the missile flight duration is relatively short, the electronics can be precooled during the captive phase so that the system can function with no additional cooling during the flight phase. The electronic support structure would act as the heat sink, soaking up the heat as it is generated, to permit the electronic system to function during the free flight phase.

Some missiles, such as the Cruise missiles, have a very long free flight phase, so that the cooling system must be capable of cooling the electronics for several hours. If ram air is used at speeds near Mach 1, the ram temperature rise of the cooling air may exceed 100°F (55°C). Since Cruise missiles fly at low altitudes, where the surrounding ambient air temperatures can be as high as 100°F, the cooling air temperatures could reach values of 200°F (93°C) even before the cooling process begins. Since the maximum desirable component mounting surface temperature is about 212°F (100°C), the outside ambient air cannot be used directly for cooling.

Cruise missiles must carry a large supply of fuel for their long flights. The fuel is often pumped through liquid cooled cold plates to provide cooling for the electronics. Toward the end of the flight mission, when the fuel supply runs low, the temperatures may increase. At this point it may be necessary to use the thermal inertia in the electronics structure to keep the system cool enough to finish its flight.

Electronic systems for satellites and spacecraft generally rely upon radiation to deep space for all their cooling. Deep space has a temperature of absolute zero, −460°F or 0°Rankine (−273°C or 0°Kelvin). Temperatures this low can provide excellent cooling if the proper surface finishes are used [4].

Special surface finishes and treatments may be required for satellites and spacecraft to prevent them from absorbing large quantities of heat from the sun. This heat may be direct solar radiation plus solar radiation reflected from the various planets and their moons (reflected radiation is called albedo) [4, 5].

Liquid cooled cold plates are often used to support electronic systems. Pumps then circulate the cooling fluid from the cold plates, where the heat is picked up, to the space radiators, where the heat is dumped to space.

Conduction heat transfer is used extensively for cooling electronic equipment in space environments. In the hard vacuum conditions of outer space, flat and smooth surfaces must be utilized with high contact pressures, to minimize the temperature rise across each interface. Although air is not normally considered to be a good heat conductor, its presence will sharply

SEC et al. v. MRI
SEC Exhibit 1020.021
IPR 2023-00220

reduce the contact resistance at most interfaces. Thermal greases are sometimes used to reduce the interface resistance in hard vacuum environments, by filling the small voids that would otherwise develop when the air is evacuated.

Air cooling can still be provided in a hard vacuum environment if a sealed and pressurized box is used. An internal fan can be used to circulate internal cooling air through a liquid cooled cold plate, which would carry away the heat. The heat from the fan must be added to the total heat load of the system. Also, a sealed box will have a large pressure differential across the surfaces of the box in the vacuum of outer space. The outer surfaces of the box must therefore be thick and stiff to resist excessive deformations and stresses caused by these pressures.

Natural convection cannot be used to transfer heat in satellites and spacecraft electronics. Natural convection requires a gravity field to permit the heated air to rise, because of its reduced density. In satellites and spacecraft, the effects of gravity are neutralized by the velocity and the continuous free fall characteristics of the flight path. Therefore, only radiation, conduction, and forced convection (in sealed boxes) should be considered for cooling electronic systems in space.

1.6 ELECTRONIC EQUIPMENT FOR SHIPS AND SUBMARINES

Large cabinets, consoles, or enclosures are normally used to support the electronic equipment used on ships and submarines. These cabinets are usually heavy and rugged, to provide protection for the electronics during storms and rough seas. Some cabinets may dissipate more than 2 kilowatts of heat, so liquid cooled cold plates and heat exchangers are often used to cool the equipment. The electronic components are often mounted on panels and sliding drawers. Panels are used to support displays, and drawers are used to support the heavy power supply units. Completely enclosed cabinets are often used by the Navy with special radio frequency interference (RFI) and electromagnetic interference (EMI) gaskets on heavy doors. This protects and shields the electronics from undesirable radiated and conducted electromagnetic waves, which can interfere with the operation of the equipment. Because these systems are completely enclosed, cooling problems may become quite severe [6].

Water is usually available on ships and submarines, so that it is natural to utilize it for cooling. Water cooled heat exchangers are often used, with external fins to permit cooling with forced air. Fans are used to force the air through the heat exchanger fins to cool the air, which is then circulated through the console. This type of forced convection cooling can be used with both closed loop and open loop systems. With a closed loop system, a cooling air supply plenum and a return plenum may be established within the side walls of the consoles. The side walls are often several inches deep,

SEC et al. v. MRI
SEC Exhibit 1020.022
IPR 2023-00220

with ribs to provide rigidity from high shock loads, so that they can easily carry the cooling air to and from the electronics. If an open loop system is used for cooling, the air entering the console would be forced through the water cooled heat exchanger, which is usually at the base of the console. The conditioned air would be circulated through the electronics and then exhausted at the top of the console.

When the heat loads are not too high, natural convection techniques can often be used to cool the electronics. This works well on tall cabinets, which can use chimney effects to force the air through the system without the use of fans or pumps. Air enters at the bottom of this cabinet, where it first picks up heat from the electronics. The warmer air has a reduced density, so that it starts to rise through the chassis, picking up more heat as it rises. The cooling air finally exits at the top of the cabinet.

Large open spaces must be provided in a chassis that is cooled by natural convection. The flow resistance must be minimized to permit the cooling air to pass freely through the cabinet. This requires a low packaging density, with very few turns in the air flow path, to ensure the proper cooling air flow [7, 8].

Often designers package electronic equipment in a console and completely ignore the cooling air flow path. A large fan is then placed at the bottom of the unit to "blow air at the electronics," with the hope that somehow, somewhere, the air will find a path to the hot spots so that they will be adequately cooled. This brute force technique is usually justified on the grounds that it has been used many times by many people and it "seems to work." Needless to say, this is a poor policy, because there is no assurance that the blowing air will ever reach the spots that require cooling, and there is no way to determine what the cooling effects will be. It is best to plan ahead so that the air can be directed to the most critical electronic components for more efficient cooling. This will result in a smaller, lighter, and less expensive electronic system, with higher reliability.

1.7 ELECTRONIC EQUIPMENT FOR COMMUNICATION SYSTEMS AND GROUND SUPPORT SYSTEMS

Communication systems and ground support systems must both be capable of continuous operation for extended periods of time at high altitudes, in hot desert areas, in arctic areas, and in rain, sleet, and snow. Large systems have their electronics completely enclosed within shelters that resemble small barns and can hold several people for long periods of time. Small systems are often enclosed in transit cases, which may be carried on the back seat of a Jeep type of vehicle for rapid mobility. Small panel trucks are very popular for transporting moderate sized units.

Communication shelters are used all over the world by military personnel and by commercial television networks, to transmit and receive all forms

SEC et al. v. MRI
SEC Exhibit 1020.023
IPR 2023-00220

of data. The shelters are usually lined from wall to wall with large electronic control consoles that can easily dissipate many kilowatts of heat.

Such shelters are insulated to protect them from both heat and cold. In hot climates the shelters are often equipped with exhaust fans to flush out hot air that has been trapped. This is important because the electronic consoles within the shelters use the local ambient air for cooling. This is done using forced convection or natural convection, depending upon the power dissipation and the location of the console. If the internal ambient temperatures within the shelter become too hot, refrigeration units may be provided, with auxiliary power units, to keep the shelters cool.

Ground support systems are generally used to perform functional checks of the electronic equipment for airplanes, missiles, ships, submarines, trains, trucks, and automobiles to ensure that they are operating properly. If malfunctions are discovered, replacements can be made to ensure successful completion of the mission or trip.

Ground support equipment is also used to supply auxiliary power or auxiliary cooling for electronic equipment that requires temporary boosters. These units could contain gasoline powered engines, with generators and regulated power supplies or large batteries as the power source.

Lightweight controls and displays are generally supported by light, drip-proof, sheet metal enclosures. If heavy items such as large transformers and power supply components are required, they are mounted at the bottom of a rugged electronic enclosure, to reduce the dynamic loads that may be developed in a shock and vibration environment.

1.8 MINICOMPUTERS, MICROCOMPUTERS, AND MICROPROCESSORS

The computer industry has been changing very rapidly since the introduction of miniature semiconductor silicone chips. The first chips, which were introduced in about 1962, contained only about 15 to 20 diodes, transistors, and resistors on a substrate that measured about 0.150 by 0.200 in (0.381 by 0.508 cm). Component densities have since increased sharply, so that the same size chip can now incorporate over 30,000 components, and the costs have dropped just as fast. Large computers utilizing discrete diode, transistor, and resistor components were soon replaced with much smaller machines which had the same power at a much lower cost because they utilized the new semiconductor chip technology. These new, smaller machines became known as minicomputers because they were so small compared to the older and larger machines but had the same capability.

Minicomputers have found exciting new applications in many areas. Their size, flexibility, reduced costs, and improved memory storage have permitted more small businesses to make use of them. The power requirements of these machines have also dropped, so that exotic and expensive techniques are not required to cool the electronics.

SEC et al. v. MRI
SEC Exhibit 1020.024
IPR 2023-00220

Microcomputers are even smaller than minicomputers. A typical minicomputer will occupy one drawer of a filing cabinet. A typical microcomputer will fit on one plug-in PCB about 5 × 7 in (12.70 × 17.78 cm). Microcomputers are not as fast as minicomputers and are generally used where flexibility, size, and cost are more important than speed.

Microcomputers have been replacing systems that utilize custom-made large scale integrated circuits (LSIs) and hybrid circuits. Although these circuits have a high density and low power dissipation, they lack flexibility and cannot be modified or adapted for different applications.

Both the minicomputers and the microcomputers require some type of central processing unit (CPU) to control input and output, to perform mathematical operations, to decode, and to move information in and out of the memory. This CPU, which would normally require the mounting surface area of one plug-in PCB, can now be placed on a single small chip. This chip is called a microprocessor, and it is the most expensive part of the microcomputer.

Microprocessors are available in rectangular cases about 2.5 × 0.75 × 0.20 in (6.35 × 1.905 × 0.508 cm) with about 40 external wires, which perform all of the CPU functions. Microprocessors must be used with memory systems, which can also be expensive. Many memory systems use dual inline package (DIP) components, which are fabricated on silicon chips in much the same way that microprocessors are made. The semiconductor memories require less power than do core memories. However, core-type memories are able to operate at higher temperatures.

Floppy disk memories are rapidly becoming available with very large capacities. These thin disks are made of a soft or floppy material (hence the name) that is coded magnetically on one or both sides and enclosed in a square cardboard cover. These disks provide a large amount of memory at a very low price.

Bits are recorded on the surface of the rotating disk with a movable head. The surface of the disk is divided into sectors, shaped like a slice of pie, and tracks, shaped like concentric rings. The disk requires 7 to 15 watts of power for its operation. Many systems use two disks because the drive mechanism for two disks is only slightly more expensive than that for one disk.

Cassette tape memories are quite common in low cost systems. The cassette memory is the cheapest mass memory available. This type of memory can store large amounts of information, but the system is very slow and usually must be turned on and off manually.

1.9 COOLING SPECIFICATIONS FOR ELECTRONICS

A number of government and civil agencies issue documents that relate to the cooling of electronic equipment. A few of these are described below.

SEC et al. v. MRI
SEC Exhibit 1020.025
IPR 2023-00220

1. *MIL-E-16400 (Navy) Electronic, Interior Communication and Navigation Equipment, Naval Ship and Shore, General Specification.* This specification covers the general requirements applicable to the design and construction of electronic interior communication and navigation equipment intended for naval ship or shore applications. The specification defines the environmental conditions within which the equipment must operate satisfactorily and reliably. This includes the selection and application of materials and parts and means by which the assembled system will be tested to ensure that it is acceptable to the U.S. Navy.

2. *MIL-STD-202, Test Methods for Electronic and Electrical Component Parts.* This specification establishes uniform methods for testing electronic and electrical component parts. This includes basic environmental tests to determine resistance and capability of withstanding natural elements and conditions surrounding military operations. The specification includes items such as capacitors, resistors, switches, relays, transformers, and jacks. Only small parts are considered in this specification. The maximum weight of transformers and inductors is limited to 300 pounds or having a rms test voltage up to 50,000 volts.

3. *MIL-STD-810, Environmental Test Methods.* This document describes all test methods of a similar character that have appeared in the various joint or single service specifications. It also describes newly developed test methods that are feasible for use by more than one service.

4. *MIL-E-5400, Electronic Equipment, Airborne, General Specification.* This specification covers the general requirements for airborne electronic equipment for operation primarily in piloted aircraft. It includes various temperature and altitude conditions for different classes of equipment, with details on selecting materials, components, and fasteners.

5. *MIL-STD-781B, Reliability Tests: Exponential Distribution.* This standard outlines test levels and test plans for reliability qualification, production acceptance, and longevity tests. Included are temperature cycling tests for isolating weak components and poor designs.

1.10 SPECIFYING THE POWER DISSIPATION

Power dissipations in electronic systems should be evaluated carefully, because the reliability and the mean time between failures (MTBF) can be sharply reduced by excessive component temperatures. It is better to be slightly conservative (slightly higher) in estimating power dissipations, to provide for future growth. Also, some compensation must be made for the normal tolerance variations in the component ratings and in the line voltages, so that a little safety factor should be added to the power dissipation in the system.

A safety factor will also provide a cushion to fall back upon when it is suddenly discovered that some critical components will not be available for

SEC et al. v. MRI
SEC Exhibit 1020.026
IPR 2023-00220

production, or that substitute components will dissipate 10% more power. It is very expensive to change the cooling technique in a system after the design has been completed.

It is possible, of course, to be too conservative and to specify power dissipations that are far higher than would normally be expected. This condition will result in added expense, weight, and size. In some cases being too conservative may result in the use of a large fan when none is needed. A large and heavy liquid cooling system may be installed instead of a simple fan because someone was too conservative in specifying the power dissipation.

Some contracts may require a thermal analysis to be completed 3 months before the qualification test program. In order to prove the validity of the analysis, the contract may require the analysis to agree within ±10% of the actual temperatures achieved during the qualification test. This is a difficult situation to deal with, because the thermal design may be based upon a worst-case duty cycle or test condition, where high line voltages and component tolerance variations have been included in the total power dissipation. Higher power dissipations will result in higher component temperatures. During the actual qualification test, on the other hand, a completely different power dissipation may be used because a different duty cycle may be specified for the tests. This may result in poor agreement between the analysis and the tests [9].

It may be necessary to investigate many different sets of conditions to prove the thermal design of an electronic system. For example, a high altitude, high temperature environment may produce the highest temperatures in the logic section of the system rather than in the power supply section. Instead, a high altitude, low temperature environment may be the most severe for power supplies, because this condition draws the maximum heater power for the warm-up period. High current demands, even for short periods, may create hot spots in the electronic components that control the power [9].

Many electronic systems require special test sets to simulate test conditions similar to those that will be experienced in actual field operation. These test sets may be designed to exercise the electronic systems in many different ways, depending upon the manner in which the equipment designers interpret the test specifications. This can result in a test power dissipation that is completely different from the dissipation experienced in actual field operation. Therefore, it is important to make sure that the test equipment designers and the electronic system designers agree on the power requirements. This will reduce the chances of having a big difference in the design power dissipation and the test power dissipation.

The engineers responsible for determining the power dissipation in an electronic system should take the time required to determine these values accurately. The power dissipations may dictate the methods of heat removal, which, in turn, will determine the hot spot component temperatures.

SEC et al. v. MRI
SEC Exhibit 1020.027
IPR 2023-00220

It is worth the extra time required for a more accurate estimate of the power dissipation, because the reliability, size, weight, and cost of the system may depend upon it.

1.11 DIMENSIONAL UNITS AND CONVERSION FACTORS

The metric system for measuring is rapidly gaining acceptance in the United States, but the English system is still used as the standard by industry, by most lay persons, by many engineers. Both sets of dimensional units are therefore used in this book to permit engineers to use the system that is more convenient for them and to permit them to convert easily from one system to the other.

Power dissipation, or heat (Q), for electronic systems is expressed in three standard sets of units: watts, British thermal units per hour (Btu/hr), and calories per second (cal/sec). The watt is the standard unit of heat and power measure for electronic equipment in most countries throughout the world, including the United States.

The British thermal unit (Btu) is the quantity of heat required to raise the temperature of 1 pound mass of water 1 degree Fahrenheit (1°F) at standard pressure [10].

The calorie (cal) is the quantity of heat required to raise the temperature of 1 gram mass of water 1 degree Celsius (1°C) at standard pressure. This is sometimes written as gram-calorie (g-cal), which is called the small calorie [10].

A consistent set of units is always used in this book. When the unit of heat is the Btu, the length dimension will be feet (ft) and the time unit will be hours (hr). When the unit of heat is the calorie, the length dimension will be centimeters (cm) and the time unit will be seconds (sec).

Conversions can be made between the various units with the use of Table 1.1.

Table 1.1 Power/Heat Rate Conversions[a] Q

Multiply Number of → / By → / to Obtain ↓	watts	Btu/hr	cal/sec
watts	1	0.293	4.187
Btu/hr	3.413	1	14.285
cal/sec	0.239	0.070	1

[a] *1 watt = 1 joule/sec.*
1 Btu = 1055 joules = 252 cal.

SEC et al. v. MRI
SEC Exhibit 1020.028
IPR 2023-00220

For example, to convert 10 Btu/hr to cal/sec using Table 1.1:

$$\left(10\,\frac{\text{Btu}}{\text{hr}}\right)(0.070) = 0.70\,\frac{\text{cal}}{\text{sec}} \tag{1.1}$$

Without the table, using dimension analysis,

$$\left(10\,\frac{\text{Btu}}{\text{hr}}\right)\left(225\,\frac{\text{cal}}{\text{Btu}}\right)\left(\frac{\text{hr}}{3600\text{ sec}}\right) = 0.70\,\frac{\text{cal}}{\text{sec}} \tag{1.2}$$

To convert 30 watts to Btu/hr using Table 1.1:

$$(30\text{ watts})(3.413) = 102.39\,\frac{\text{Btu}}{\text{hr}} \tag{1.3}$$

Thermal conductivity is expressed in English units and in metric units.

$$\text{English units:}\quad K = \frac{\text{Btu}}{\text{hr ft}^2\,°\text{F/ft}} = \frac{\text{Btu ft}}{\text{hr ft}^2\,°\text{F}} = \frac{\text{Btu}}{\text{hr ft }°\text{F}}$$

$$\text{Metric units:}\quad K = \frac{\text{g cal}}{\text{sec cm}^2\,°\text{C/cm}} = \frac{\text{cal cm}}{\text{sec cm}^2\,°\text{C}} = \frac{\text{cal}}{\text{sec cm }°\text{C}}$$

Conversions can be made between English units and metric units using Table 1.2.

Table 1.2 Thermal Conductivity Conversions K

Multiply Number of → / By → / to Obtain ↓	$\frac{\text{Btu ft}}{\text{hr ft}^2\,°\text{F}}$ or $\frac{\text{Btu}}{\text{hr ft }°\text{F}}$	$\frac{\text{cal cm}}{\text{sec cm}^2\,°\text{C}}$ or $\frac{\text{cal}}{\text{sec cm }°\text{C}}$
$\frac{\text{Btu}}{\text{hr ft }°\text{F}}$	1	241.9
$\frac{\text{cal}}{\text{sec cm }°\text{C}}$	0.00413	1

For example, to convert 88 Btu/hr ft °F to cal/sec cm °C using Table 1.2:

$$\left(88\,\frac{\text{Btu}}{\text{hr ft }°\text{F}}\right)(0.00413) = 0.363\,\frac{\text{cal}}{\text{sec cm }°\text{C}} \tag{1.4}$$

SEC et al. v. MRI
SEC Exhibit 1020.029
IPR 2023-00220

The coefficient of heat transfer is expressed in English units and metric units in Table 1.3.

$$\text{English units:} \quad h = \frac{\text{Btu}}{\text{hr ft}^2\ ^\circ\text{F}}$$

$$\text{Metric units:} \quad h = \frac{\text{cal}}{\text{sec cm}^2\ ^\circ\text{C}}$$

Other conversion values are given in Tables 1.4 through 1.11.

Table 1.3 Coefficient of Heat Transfer Conversions h

Multiply Number of → / By → / to Obtain ↓	$\frac{\text{Btu}}{\text{hr ft}^2\ ^\circ\text{F}}$	$\frac{\text{cal}}{\text{sec cm}^2\ ^\circ\text{C}}$
$\frac{\text{Btu}}{\text{hr ft}^2\ ^\circ\text{F}}$	1	7373
$\frac{\text{cal}}{\text{sec cm}^2\ ^\circ\text{C}}$	0.0001356	1

Table 1.4 Viscosity Conversions[a] μ

Multiply Number of → / By → / to Obtain ↓	$\frac{\text{lb}}{\text{ft hr}}$	$\frac{\text{g}}{\text{cm sec}}$ (poise)	$\frac{0.01\ \text{g}}{\text{cm sec}}$ (centipoise)
$\frac{\text{lb}}{\text{ft hr}}$	1	242	2.42
$\frac{\text{g}}{\text{cm sec}}$ (poise)	0.00413	1	100
$\frac{0.01\ \text{g}}{\text{cm sec}}$ (centipoise)	0.413	0.01	1

[a] *English units: μ = lb/ft hr; metric units: μ = g/cm sec = poise (100 centipoise = 1 poise).*

Table 1.5 Specific Heat Conversions *Cp*

Multiply Number of → / By → / to Obtain ↓	$\frac{Btu}{lb\ °F}$	$\frac{cal}{g\ °C}$
$\frac{Btu}{lb\ °F}$	1	1
$\frac{cal}{g\ °C}$	1	1

Table 1.6 Density Conversions ρ

Multiply Number of → / By → / to Obtain ↓	$\frac{lb}{ft^3}$	$\frac{lb}{in^3}$	$\frac{g}{cm^3}$
$\frac{lb}{ft^3}$	1	1728	62.43
$\frac{lb}{in^3}$	0.000579	1	0.036
$\frac{g}{cm^3}$	0.0160	27.68	1

SEC et al. v. MRI
SEC Exhibit 1020.031
IPR 2023-00220

Table 1.7 Pressure Conversions

Multiply Number of → / By → / to Obtain ↓	$\frac{lb}{in^2}$	in H_2O	$\frac{g}{cm^2}$	mm Hg
$\frac{lb}{in^2}$	1	0.0361	0.0142	0.0193
in H_2O	27.7	1	0.394	0.535
$\frac{g}{cm^2}$	70.37	2.538	1	1.361
mm Hg	51.71	1.869	0.735	1

Table 1.8 Weight Conversion

Multiply Number of → / By → / to Obtain ↓	lb	g	kg
lb	1	0.00220	2.205
g	453.6	1	1000
kg	0.4536	0.001	1

SEC et al. v. MRI
SEC Exhibit 1020.032
IPR 2023-00220

Table 1.9 Length Conversion

Multiply Number of → / By → / to Obtain ↓	in	ft	cm
in	1	12	0.3937
ft	0.0833	1	0.0328
cm	2.54	30.48	1

Table 1.10 Area Conversions

Multiply Number of → / By → / to Obtain ↓	in^2	ft^2	cm^2
in^2	1	144	0.155
ft^2	0.00694	1	0.00107
cm^2	6.452	929	1

SEC et al. v. MRI
SEC Exhibit 1020.033
IPR 2023-00220

Table 1.11 Volume Conversions

Multiply Number of → / By → / to Obtain ↓	in^3	ft^3	cm^3
in^3	1	1728	0.0610
ft^3	5.787×10^{-4}	1	3.531×10^{-5}
cm^3	16.39	2.832×10^4	1

Figure 1.4 shows an investment cast aluminum chassis with the rear cover removed.

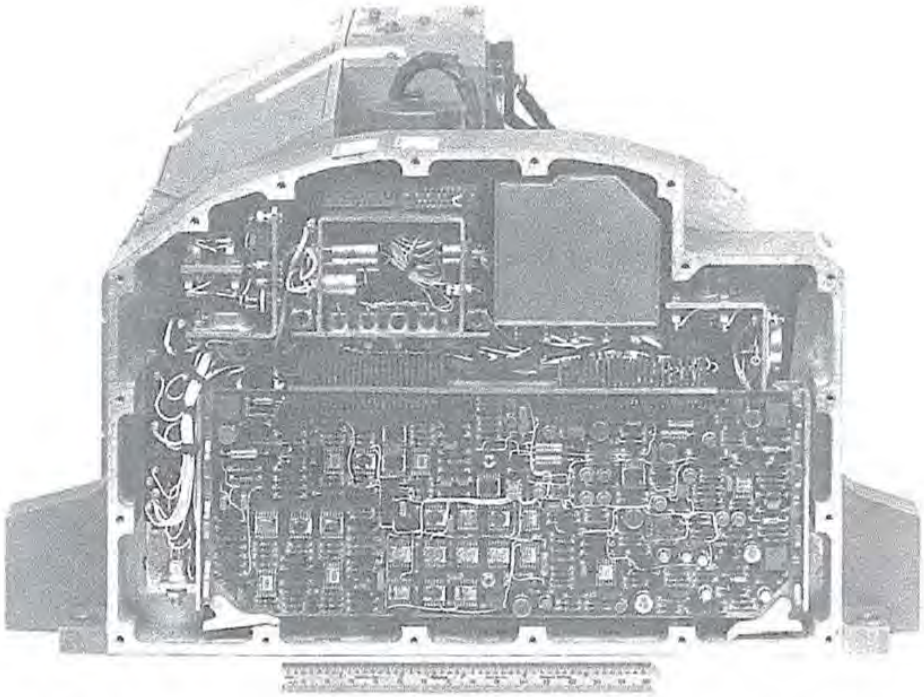

Figure 1.4 Investment cast electronic box, where the temperatures are controlled by conduction of heat to air cooled pin fin heat exchangers in the side walls. (Courtesy Litton Systems, Inc.)

SEC et al. v. MRI
SEC Exhibit 1020.034
IPR 2023-00220

2

Designing the Electronic Chassis

2.1 FORMED SHEET METAL ELECTRONIC ASSEMBLIES

Electronic systems normally consist of many different discrete electronic component parts, such as resistors, capacitors, diodes, transistors, hybrids, DIPs, LSIs, microprocessors, and transformers, which are enclosed within a support structure called the chassis. Power is dissipated by these different components, because the electronic system is not 100% efficient. Any power that is dissipated is rejected in the form of heat. This heat must be removed to prevent excessive temperatures from developing in these electronic components.

The purpose of the electronic chassis is to support the components while providing a low resistance thermal path to a heat sink, which will absorb this waste heat with a minimum rise in the temperature of the components. The heat sink may be the ambient air surrounding the chassis or a liquid cooled cold plate that is an integral part of the chassis wall.

Whatever method of heat transfer is selected, the technique should be as simple and as cost effective as possible. Many factors will have to be considered, such as the space available, the power requirements of the cooling system, the maximum allowable component temperatures, component sizes, power densities, and the heat sink temperature. Other factors, such as shock and vibration, may have to be considered together with the thermal environment to ensure an adequate chassis design [1, 11, 12].

Sheet metal structures are often used for many different types of electronic boxes because the manufacturing costs are so low. Thin gauge aluminum or steel sheets can be blanked and formed into a lightweight chassis with the use of rivets, spot welding, or arc welding. The final assembly is usually painted for protection and appearance. This type of construction can be used for a chassis 7 or 70 in high.

Light gauge steel sheet metal structures are usually not suitable for cooling high power electronic systems by means of conduction. The cross section areas are small because the metal is thin and the thermal conduct-

SEC et al. v. MRI
SEC Exhibit 1020.035
IPR 2023-00220

ance is low. This increases the thermal resistance, which also increases the component hot spot temperatures. Also, light gauge sheet metal structures are not generally capable of withstanding high vibration and shock levels, so that their use in these environments is very limited.

Lightweight sheet metal structures may tend to amplify any acoustic noise generated by cooling fans or pumps. If large, thin flat panels are used on an electronic box that is to be fan cooled, make sure that it is not too close to workers, who may object to the acoustic noise that is generated.

Structural epoxies are being used very successfully for assembling small electronic boxes. These epoxies have a high peel and shear strength, with a short cure time at 212°F (100°C), which makes them very cost effective. Lap joints with large surface areas must be used to obtain the necessary strength at the bonded interfaces.

Maintainability has recently become a big factor in the design of electronic equipment. Quick access is usually required to fault-isolate an electrical malfunction and to provide some means for a quick repair. This has resulted in the extensive use of plug-in types of circuit boards which can be removed and replaced very easily. These circuit boards are generally used to support small electronic components that do not dissipate a great deal of power. Large, heavy, or high power dissipating components are often mounted on the chassis walls with special support brackets.

A typical chassis would have two sheet metal dust covers on opposite sides of the chassis. One cover would provide access to the plug-in PCBs; the cover on the opposite side would provide access to the wiring harness or the master interconnecting board.

2.2 DIP BRAZED BOXES WITH INTEGRAL COLD PLATES

Dip brazed aluminum boxes are convenient to use for small, lightweight systems when the quantities are small, usually less than about eight or ten boxes. If the quantities are much larger, it is generally more cost effective to use aluminum investment castings or plaster mold castings, even though they require special tooling and pattern costs. Most electronic boxes will require shelves and brackets for mounting electronic components, ribs for stiffening the chassis to resist vibration, and cutouts for the cables and electrical harness. A dip brazed electronic chassis can often provide these features at a relatively low cost.

The size of the dip brazed assembly is usually limited by the size of the dip brazed tank, or salt bath, which is used to completely submerge the structure that is to be brazed. The individual parts of the chassis are joined together like a three dimensional jigsaw puzzle. Sometimes, a stainless steel fixture is used to hold the individual parts together during the dip brazing process. Sometimes the parts are tack welded, riveted, or screwed together with aluminum screws. An aluminum slurry or a brazing strip, with a melting

SEC et al. v. MRI
SEC Exhibit 1020.036
IPR 2023-00220

temperature slightly lower than the temperature of the salt bath, is used to join the individual structural members, which have a melting temperature slightly higher than that of the salt bath. As the slurry melts, capillary action draws the molten aluminum into the small voids between the individual parts and joins them rigidly.

Sometimes a structure may be too big to dip braze in one piece; in this case two separate dip brazed subassemblies are made. These can be joined later with screws and structural epoxy.

Thin plate fin types of heat exchangers are often used for the side walls of a chassis. The heat exchangers (or cold plates) are often dip brazed first as a subassembly and then cemented together to form a chassis. Sometimes the heat exchangers can be dip brazed as an integral part of the chassis without first forming a subassembly. The multiple fins provide a large surface area, which sharply increases the amount of heat that can be removed from the chassis with air or with liquids. A typical cross section through a chassis with finned side wall heat exchangers is shown in Fig. 2.1.

The plate fin material is usually about 0.006 in (0.0152 cm) or 0.008 in (0.0203 cm) thick so that many fins can be spaced close together. The typical spacing is about 14 to 18 fins per inch. Some companies can dip braze as many as 23 to 25 fins per inch.

When the fins get very close together, it becomes very difficult to clean out the salts left from the dip brazed tank, so that they may become trapped. This can block the fin passages and reduce the cooling effectiveness. Also, trapped salts can corrode the metal and weaken the structure.

It is desirable to have some method for checking the dip brazed heat exchangers to make sure that the fins are not blocked. A visual check is very valuable. If it is possible to look down the heat exchanger, blocked fins can be spotted and either rejected or cleaned. If a visual check is not possible, a pressure drop check should be made with a known flow passing

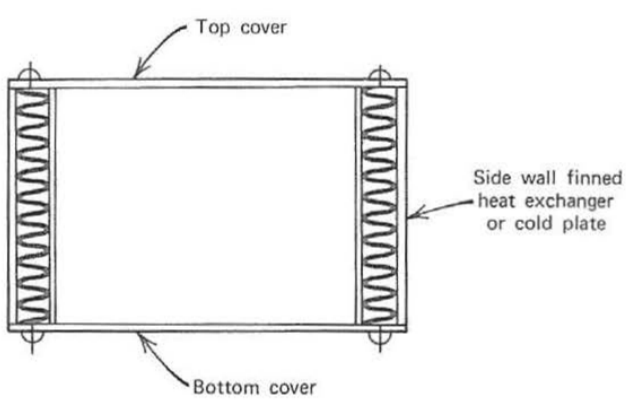

Figure 2.1 Chassis with side wall heat exchanger.

SEC et al. v. MRI
SEC Exhibit 1020.037
IPR 2023-00220

through the fins. If a blockage occurs, the pressure drop across the fins will be very high.

The fin material is generally very soft, so that it can be deformed easily. If fins in an air cooled cold plate are allowed to extend to the end of the chassis opening, they can become bent or deformed by foreign objects, such as bolts, nuts, screwdrivers, and even pencils. Therefore, for added protection, the ends of the fins should be recessed at least $\frac{1}{4}$ in.

2.3 PLASTER MOLD AND INVESTMENT CASTINGS WITH COOLING FINS

Plaster mold castings and investment castings are very popular for small electronic support structures or small electronic enclosures. Plaster mold castings and investment castings use plaster for the mold, into which a molten metal is poured. Typical metals are usually aluminum, magnesium, zinc, bronzes, and some steels. Wall thicknesses of 0.040 to 0.060 in (0.102 to 0.152 cm) can be readily obtained with both methods.

Investment piece part castings are generally slightly more expensive than plaster mold castings because an intermediate wax core is required. This core is made up in the exact detail required by the finished product. It is coated with several thin coats of plaster or refractory material and thoroughly dried. The coated core is heated to melt the wax, which is then drained, leaving the hollow mold. The mold is filled with molten metal while a vacuum is applied to remove tiny air pockets from the porous plaster or refractory outer shell. This permits the molten metal to fill in every small corner in the mold for excellent detail, surface finish, and accuracy. The outer shell must be broken away and destroyed to obtain the finished product.

Investment castings are somewhat limited in their size, depending upon the complexity. Intricate chassis castings 15 × 8 × 10 in (38.10 × 20.32 × 25.40 cm), with wall thicknesses of 0.070 in (0.178 cm), can be readily obtained.

Plaster mold casted piece parts are normally less expensive than investment castings because the process does not require the use of an intermediate disposable wax pattern. However, tooling costs for the plaster mold casting will be higher if permanent molds are used, because of the extra machining required.

Very large plaster mold castings can be made, up to 100 in (254 cm) in length if required, with considerable detail. However, plaster castings usually cannot produce small details as well as can investment castings.

Recent advances in casting technology have made it possible to produce thin wall aluminum castings that are pressure-tight for large molecule vapors such as nitrogen, or exotic liquids. The process, called the Antioch process, produces progressive freezing from the distant points in the casting toward

SEC et al. v. MRI
SEC Exhibit 1020.038
IPR 2023-00220

the risers. The process uses a plaster mold that has the permeability of a sand mold. Impregnation with an epoxy resin is not required to obtain an airtight box. This is important for applications that require electroplated nickel, electroless nickel, or some other superior plating process for superior corrosion resistance.

Investment castings and plaster castings methods can be used to make very efficient, lightweight heat exchangers and cold plates with integrally cast pin fins. Typical pin fins are about 0.062 in (0.157 cm) in diameter, 0.50 in (1.27 cm) long, and spaced on 0.200 in (0.508 cm) centers. Plate fin types of heat exchangers and cold plates are much more difficult to cast. Continuous plate fins require cores that must be supported as the molten metal is poured. These cores can shift and crack if the ribs are very long. If plate fins are desired, it might be better to cast them in short lengths instead of in a continuous length, to provide a means for supporting the cores.

Cemented construction techniques can often be combined with castings to provide a plate fin heat exchanger or cold plate. Extruded plate fin sections can be cemented to cast plate fin sections to provide a plate fin heat exchanger, as shown in Figure 2.2.

2.4 DIE CAST HOUSINGS

The die casting process is capable of providing the lowest cost piece parts, with high quality and excellent appearance. However, tooling costs are very high, tools take a long time to fabricate, and modifications or design changes are very expensive. Die castings should therefore not be considered for production runs of less than about 1000 piece parts. This requires long range planning, scheduling, and coordinating to ensure a satisfactory product.

For large production runs it may even be possible to use investment castings or plaster mold castings as a buffer until the die casting tools have been fabricated, installed, and proven out.

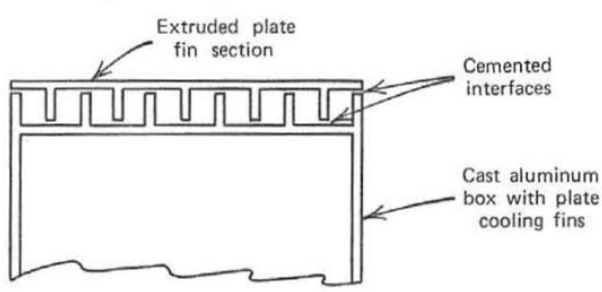

Figure 2.2 Plate fin extrusion cemented to a cast plate fin box to form a multiple fin heat exchanger.

SEC et al. v. MRI
SEC Exhibit 1020.039
IPR 2023-00220

2.5 LARGE SAND CASTINGS

Large electronic enclosures are often required for systems that must operate in severe vibration and shock environments. Rigid structures are required to withstand high acceleration levels, without fatigue failures, while providing an adequate support for electronic components. If weight is not too critical, fabrication costs can often be substantially reduced with the use of large aluminum sand castings. This type of cabinet is often suitable for ships and submarines, which must be capable of operating in rough seas during storms.

Mounting surfaces for the cabinet and for electronic subassemblies and components may have to be machined, because of poor casting tolerance control. However, with a little planning, the amount of machining can often be reduced to provide a cost effective structure.

2.6 EXTRUDED SECTIONS FOR LARGE CABINETS

Weight is often a problem with large cabinets that must be designed to withstand the Navy shock (MIL-S-901) and vibration (MIL-STD-167) requirements. Thick cast walls can provide the required rigidity, but with a high weight penalty. Under these circumstances extruded sections, with ribs or hollow cores, are capable of providing a rigid but relatively lightweight electronic enclosure. This type of structure can be welded, bolted, or riveted together to form a very rugged console. The hollow core type of extrusion is very convenient for ducting cooling air to various parts of the cabinet with fans or blowers. Large hollow core cross sections can carry large quantities of cooling air with a small pressure drop. Openings can be placed at various points in the extruded wall sections to direct the cooling air to hot spot areas. These openings can be blocked or reduced in size with plugs if the power distribution is changed at a later date.

Extruded side wall sections are convenient to use with closed forced air cooling systems, where a water cooled heat exchanger or a refrigeration unit cools the recirculated air. One vertical side wall can be used as the supply plenum, and the opposite side wall can be used as the return plenum, as shown in Figure 2.3.

2.7 HUMIDITY CONSIDERATIONS IN ELECTRONIC BOXES

Electronic equipment must often be capable of operating in very humid environments, where condensation will produce large amounts of water over a long period of time [13].

When high humidity environments are encountered, equipment designers must make a choice. They can seal the box against moisture or let the box

SEC et al. v. MRI
SEC Exhibit 1020.040
IPR 2023-00220

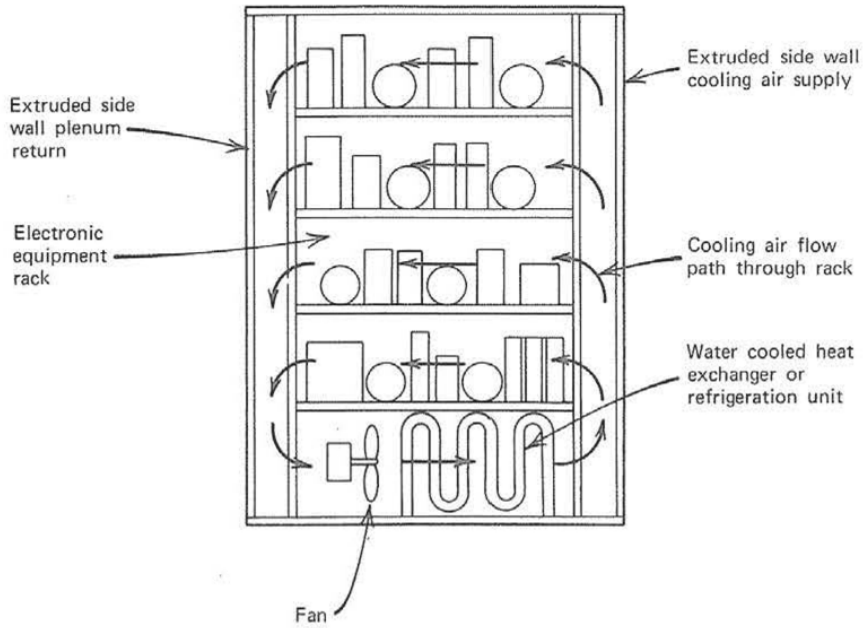

Figure 2.3 Closed cooling air recirculating system for electronic equipment rack.

breathe. Past experience with moisture problems shows that it is better to let the box breathe, because it is extremely difficult to seal an electronic box against moisture [14].

A sealed box is larger and heavier than a nonsealed box, especially if the system is required to operate at high altitudes. The walls of a sealed box must be capable of withstanding high forces due to high pressure differentials at high altitudes. The increased stiffness requirements will result in a weight increase and a size increase.

Humidity can cause serious problems in the electronic equipment when the internal circulating air is cooler than the outside ambient air. Moisture can condense on the electronic components, connectors, and circuit boards, producing short circuits or radical changes in the resistance between electronic components.

A moisture drainage path should be provided that permits the condensation to drain from the console walls, circuit boards, connectors, and wire harness to a drip pan at the bottom of the unit, where the moisture can evaporate or drain out of the system. Avoid moisture traps where the condensate can settle and cause corrosion. Drill holes, with a minimum diameter of 0.25 in, in the corners of horizontal bulkheads, away from the electronic components, to provide a moisture drainage path through the cabinet.

Use vertically oriented circuit boards and connectors, if possible, to

SEC et al. v. MRI
SEC Exhibit 1020.041
IPR 2023-00220

provide a natural moisture drainage path away from the boards to the bottom of the chassis.

Offset drain holes may be required in the base of the chassis to prevent foreign objects, such as screwdrivers, from being poked into these holes and causing internal damage. Drain holes similar to the one shown in Figure 2.4 will reduce the possibility of foreign objects entering the chassis.

2.8 CONFORMAL COATINGS

There are four popular types of conformal coatings: acrylic, epoxy, polyurethane, and silicone. A thin conformal coating 0.003 to 0.005 in (0.0076 to 0.0127 cm) thick may be required to protect the circuit boards from moisture. However, these coatings should be applied only if they are absolutely necessary. In general, coatings are expensive to apply. They require special cleaning processes, special tools to apply the coatings, and the circuit boards are difficult to rework. In addition, many coatings tend to crack, chip, and peel, and they will contaminate the connector contacts unless they are masked during the application. Also, water vapor tends to creep under the coatings and condense, so that coatings can change the electrical resistance between the circuits they are supposed to help. Therefore, if it becomes necessary to apply a conformal coating for moisture protection, make sure that the cleaning and application procedures are carefully followed, or the coatings may create more problems than they solve.

The conformal coat should not be applied so that it bridges the strain relief on the component lead wires. The purpose of the strain relief is to reduce stresses in the wire and in the solder joints. If the strain relief is bridged (completely filled), it will act like a short circuit and will not provide strain relief during vibration as the PCB flexes. Also, a filled strain relief will restrict the relative motion that results during temperature cycling tests. This will increase the stresses in the solder joints, which will increase the chance of failure.

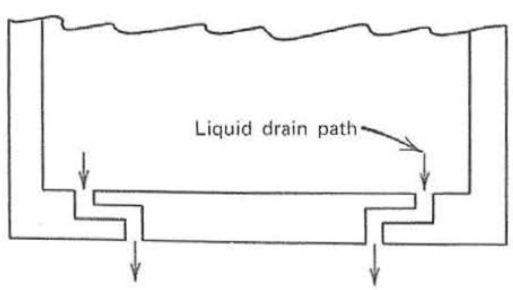

Figure 2.4 Offset drain holes in bottom of chassis.

SEC et al. v. MRI
SEC Exhibit 1020.042
IPR 2023-00220

2.9 SEALED ELECTRONIC BOXES

Electronic systems with high impedance circuits are usually very sensitive to humidity and moisture in the ambient air. Slight amounts of condensation on sensitive components, printed circuits, or electrical connectors can often produce large changes in the operating characteristics of the system. Therefore, to minimize potential problems resulting from humidity, moisture, and condensation, sensitive electronic systems are often packaged in sealed electronic boxes.

Sealed electronic boxes are also used for some air cooled electronic systems, which must be capable of operating in the hard vacuum environment of outer space. The sealed box is used to prevent the loss of air, which is required to cool the electronic components.

Many different types of seals can be used, depending upon the size of the unit, the cost, and the ease of repair. Solder seals are very effective for small covers on boxes, but repairs are inconvenient. O-ring seals are popular and easy to use for large or small boxes. A large, stiff, machined mounting flange with many high strength screws is required for the box and the cover, to provide an effective seal. A typical O-ring seal is shown in Figure 2.5.

Sealed electronic boxes, which are used for space applications, may require the use of a pressure relief valve to reduce the high internal pressure that will develop at high altitudes. If a relief valve is not used, the walls of the box will have to be made stiff enough to resist the high deflections and stresses that may result when the external atmosphere is no longer present.

The seal must do two things. First, it must prevent air (or any other gas, such as dry nitrogen) from leaking out of the box. Second, it must prevent water vapor from entering the box, because water vapor may condense and cause arcing or short circuits. Preventing air from leaking out of the box is

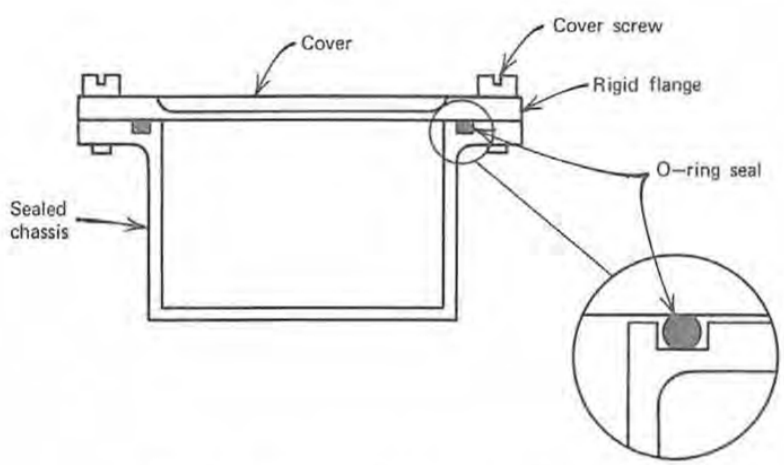

Figure 2.5 O-ring seal for electronic box.

SEC et al. v. MRI
SEC Exhibit 1020.043
IPR 2023-00220

not too difficult to accomplish, since many different types of gaskets will provide an effective seal for an airtight box. A vaportight box may be very difficult to achieve, however, if the wrong type of gasket is used.

Flat rubber gaskets are easy to use and cheap to fabricate. These gaskets are capable of providing an airtight seal for a large electronic box. A typical flat gasket seal is shown in Figure 2.6. A flat rubber gasket should not be used for boxes that require a water vapor seal. The interface pressure between the flat rubber gasket and its mating box and cover flanges is usually very low, because the rubber is free to deform as the cover screws are tightened. Although this gasket will seal in air, it will not seal out water vapor. The water vapor molecule is smaller than the air molecule, so that the water vapor module will pass through restricted openings more readily than the air molecule.

The water vapor molecule is smaller than the air molecule because the water vapor molecule has a smaller molecular weight. The size of the gas molecule is related to the molecular weight of the gas, so that a gas molecule with a high molecular weight will be larger than a gas with a low molecular weight. Air is primarily a mixture of oxygen and nitrogen gases. Oxygen (O_2) has a molecular weight of 32 and nitrogen (N_2) has a molecular weight of 28. Water vapor is still water (H_2O). Two atoms of hydrogen (H_2) have an atomic weight of 2, and one atom of oxygen (O) has an atomic weight of 16, for a total molecular weight of 18 [15].

The smaller size of the water vapor molecule therefore permits it to pass through openings that would normally restrict the flow of the air (oxygen and nitrogen) molecules. The O-ring type of gasket seal has a very high interface pressure, which makes it very effective for boxes that require a water vapor seal.

Water vapor is a gas and therefore obeys the normal gas laws. The force driving the water vapor migration is the difference in the partial pressure of the water vapor between two different areas. Water vapor will tend to flow from the high partial pressure areas to the low partial pressure areas. If an electronic box is assembled in a dry climate, the partial pressure of the

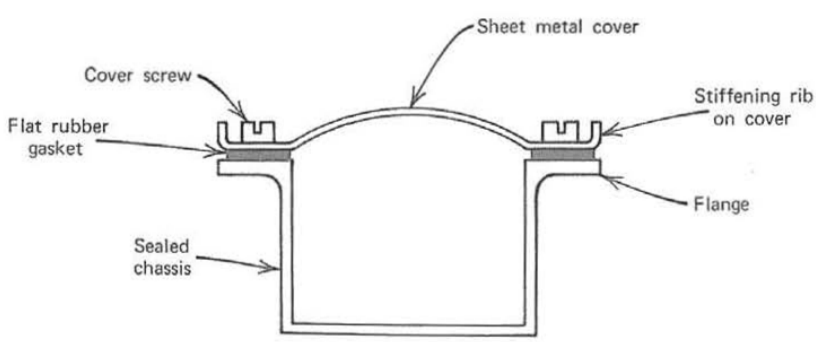

Figure 2.6 Flat rubber gasket for electronic box.

SEC et al. v. MRI
SEC Exhibit 1020.044
IPR 2023-00220

water vapor within the box will be low. If that box is now transported to a humid area, such as Florida, the partial pressure of the water vapor in the atmosphere will be quite high. The water vapor will try to equalize the partial pressure, so that it will try to enter the box. It does not matter if the absolute air pressure within the box is 50 psia and the outside ambient pressure is only 14.7 psia. Since the partial pressure of the water vapor within the box is low, the tendency will be for the water vapor to try to enter the box, to equalize the partial pressures [14].

If the type of gasket used to seal an electronic box is not effective, water vapor will pass through the seal and condense within the electronic box. It does not take very long for half a pint of water to accumulate within a small chassis due to condensation. An electronic box 15 in × 10 in wide × 8 in high, with a flat rubber gasket seal under the top cover can accumulate that amount of condensation in a period of only about 3 months when it is continually exposed to humid air.

Cover gaskets are not the only areas that will permit water vapor to enter an electronic box. Other sources may be the connector interfaces, areas around fasteners, and the basic structure itself.

Connector interfaces on an electronic box must be adequately sealed if the box is to prevent the entry of water vapor. Solder seals are very effective for small connectors, but, again, repairs are inconvenient. O-ring gaskets are convenient, relatively easy to use, and can provide an effective water vapor seal.

A sealed electronic box should not have bolts or other fasteners passing through the outer structural wall into the interior of the chassis. Every hole in the chassis wall is the possible source of a leak. If bolts are required to pass through an external wall, gaskets or some other provision must be made to ensure an effective seal at that interface.

The basic structure of the electronic box itself may not be capable of providing an effective water vapor seal. Sheet metal structures are generally satisfactory. The sheet metal is made from rolled stock, so that it is not porous. However, the box corners may be welded and welds may leak.

Cast structures are often very porous. Some magnesium and aluminum castings 1 in thick will not hold air for more than 5 minutes. Structures of this type can often be impregnated with an epoxy resin. The most effective technique for applying the resin is by means of a vacuum. The porous structure is placed in a vacuum chamber, the air is evacuated, and the resin is applied to the surfaces to be impregnated. The vacuum is then released and the increased air pressure drives the resin into the porous surface, which seals the structure.

Dry nitrogen is very effective for removing water vapor from a sealed box. An inlet and outlet valve are placed at opposite ends of the chassis, which is purged with dry nitrogen to remove all traces of water vapor. The nitrogen valves are then closed so that the box is sealed with dry nitrogen. Since most of our normal atmosphere is nitrogen, the characteristics of the

SEC et al. v. MRI
SEC Exhibit 1020.045
IPR 2023-00220

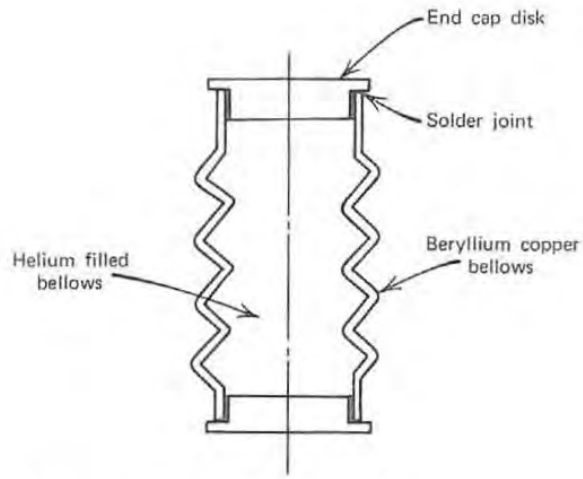

Figure 2.7 Cross section through helium filled sealed bellows with end caps.

gas within the box is very similar to the atmosphere, except that it contains no water vapor.

Desiccators may be placed within the electronic enclosure to absorb any water vapor that may seep into the sealed box over a long period of time. Materials such as silica jel or molecular sieve are quite effective for this purpose.

Care should be exercised in the selection of materials that are to be used for sealed packages. Extrusions should be avoided, if possible, because

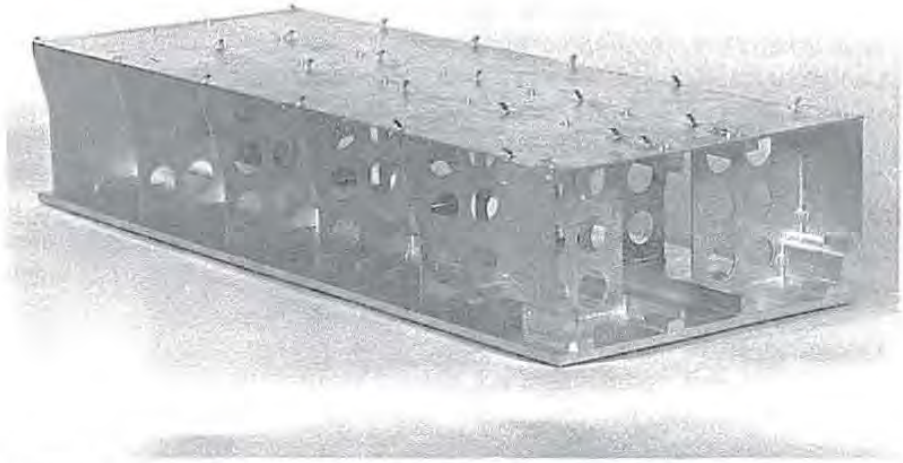

Figure 2.8 Dip brazed electronic box with self jigging tabs. (Courtesy Honeywell Co.)

SEC et al. v. MRI
SEC Exhibit 1020.046
IPR 2023-00220

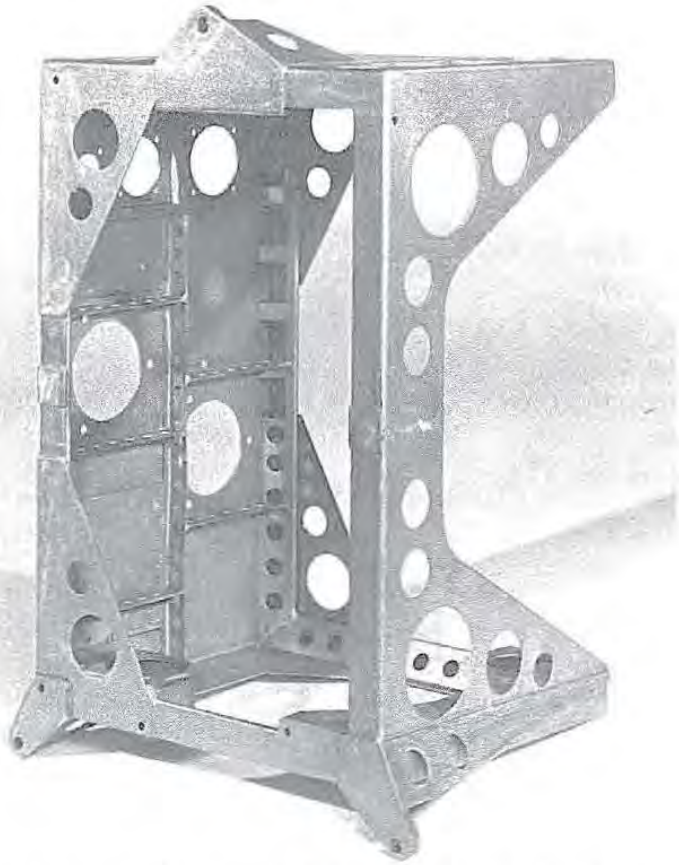

Figure 2.9 Dip brazed electronic chassis with aluminum screws and tack welds for positioning piece parts. (Courtesy Kearfott Division, The Singer Co.)

extruded sections can be very porous. For example, end caps are often used on sealed helium filled bellows, as shown in Figure 2.7. These bellows are used to take up the expansion of the liquid used in gyros, which must operate over a wide temperature range.

If the end caps are made from disk sections that have been sliced from an extruded rod, the end caps can be porous and the helium will leak out. To avoid this difficulty, the end caps should be stamped or machined from flat rolled sheet stock. This would provide end caps that have the grain running perpendicular to the axis of the bellows, so that the axial pores are sharply reduced.

2.10 STANDARD ELECTRONIC BOX SIZES

Electronic boxes can come in a wide variety of sizes and shapes, depending upon the application and environment. One organization, however, has

SEC et al. v. MRI
SEC Exhibit 1020.047
IPR 2023-00220

Table 2.1 ARINC Standard Rectangular Box Sizes

Description	Width (in)	Length (in)	Height (in)
Short one quarter ATR	2.250	12.5625	7.625
Long one quarter ATR	2.250	19.5625	7.625
Short three eights ATR	3.5625	12.5625	7.625
Long three eights ATR	3.5625	19.5625	7.625
Short half ATR	4.875	12.5625	7.625
Long half ATR	4.875	19.5625	7.625
Short three quarters ATR	7.50	12.5625	7.625
Long three quarters ATR	7.50	19.5625	7.625
One ATR	10.125	19.5625	7.625
One and one half ATR	15.375	19.5625	7.625

made an attempt to standardize the size, shape, and mounting for electronic boxes used in air transport equipment. This has become the standard known as ARINC, which is an acronym for Aeronautical Radio Inc. This specification, ARINC 404, Air Transport Equipment Cases and Racking (ATR), December 31, 1970, defines a group of rectangular plug-in types of electronic equipment cases, which have the outer dimensions listed in Table 2.1.

Figure 2.8 shows a dip brazed aluminum chassis with tabs that can be twisted or bent to lock piece parts together before brazing. In Figure 2.9, the piece parts are held by aluminum screws and tack welds prior to brazing.

SEC et al. v. MRI
SEC Exhibit 1020.048
IPR 2023-00220

3

Conduction Cooling for Chassis and Circuit Boards

3.1 CONCENTRATED HEAT SOURCES, STEADY STATE CONDUCTION

Electronic components are not 100% efficient, so that heat is generated in active components whenever the electronic system is in operation. As the heat is generated, the temperature of the component increases and heat attempts to flow through any path it can find. If the heat source is constant, the temperature within the component continues to rise until the rate of the heat being generated is equal to the rate of the heat flowing away from the component. Steady state heat transfer then exists—the heat flowing into the component is equal to the heat flowing away from the component.

Heat always flows from high temperature areas to low temperature areas. When the electronic system is operating, the electronic components are its hottest parts. To control the hot spot component temperatures, the heat flow path must be controlled. If this is not done properly, the component temperatures are forced to rise in an attempt to balance the heat flow. Eventually, the temperatures may become so high that the component is destroyed if a protective circuit or a thermal cutoff switch is not used.

Conduction heat transfer in an electronic system is generally a slow process. Heat flow will not occur until a temperature difference has been established. This means that each member along the heat flow path must experience a temperature rise before the heat will flow to the next point along the path. This process continues until the final heat sink is reached, which is often the outside ambient air. This process may take many hours, perhaps even many days for a very large system, depending upon its size.

The materials along the heat flow path sharply influence the temperature gradients developed along the path. Heat can be conducted through any material: solid, liquid, or gas. The ability of the heat to flow through any material is determined by the physical properties of the material and by the geometry of the structure. The basic heat flow relation for steady state conduction from a single concentrated heat load is shown in Eq. 3.1. This

SEC et al. v. MRI
SEC Exhibit 1020.049
IPR 2023-00220

Table 3.1 Units Used with Thermal Conductivity Equation[a]

Item	Symbol	English Units	Metric Units
Power dissipation	Q	$\frac{\text{Btu}}{\text{hr}}$	$\frac{\text{cal}}{\text{sec}}$
Thermal conductivity	K	$\frac{\text{Btu}}{\text{hr ft °F}}$	$\frac{\text{cal}}{\text{sec cm °C}}$
Cross section area	A	ft^2	cm^2
Temperature difference	Δt	°F	°C
Length	L	ft	cm

[a] *Power in watts must always be converted into Btu/hr or cal/sec before it can be used in the equation.*

relation can be used for both English and metric units (Table 3.1). Consistent sets of units must always be used, however, as defined below [15–17].

$$Q = KA\frac{\Delta t}{L} \tag{3.1}$$

3.2 MOUNTING ELECTRONIC COMPONENTS ON BRACKETS

Electronic components are often mounted on brackets, because wall space on a typical chassis is very limited. The bracket must provide a good heat flow path from the component to the ultimate heat sink, which may be a cold plate on the chassis wall. The temperature rise that develops from the component to the chassis wall is determined by the size of the bracket, how the bracket is fastened to the wall, and how the component is fastened to the bracket. The actual temperature that is developed at the mounting surface of the component is simply the temperature of the wall plus the temperature rise from the wall to the surface of the component.

Structural epoxies are convenient for mounting brackets to chassis walls. Epoxies are strong, easy to apply, and cure rapidly. One note of caution: Avoid silicone greases in areas that will be cemented. Silicones tend to migrate. Even if the grease is not in contact with the cemented joint, the migration will carry it to the joint before the epoxy is applied. This prevents the epoxy from bonding properly, resulting in a weakened joint.

If the chassis will experience any vibration or shock, it is a good idea to use mechanical fasteners such as rivets or screws with the epoxy to improve the bond.

Cantilevered brackets should be avoided in shock and vibration environments because they have low resonant frequencies and high transmissibilities. This results in high dynamic stresses and a low fatigue life [1].

SEC et al. v. MRI
SEC Exhibit 1020.050
IPR 2023-00220