factory, so that some design changes must be made. If the power dissipation cannot be reduced, the mechanical design of the structure must be changed.

An examination of the individual temperature rises shows that Δt_4 has the highest value of 76.8°F (42.6°C), which is shown in Eq. 4.4. The easiest way to reduce the temperature rise is to simply increase the wall thickness. If weight is not too critical, the wall thickness could be increased from 0.090 in to 0.120 in (0.230 to 0.305 cm). This increase would result in a new temperature rise, which is obtained with a direct ratio of the thickness.

$$\Delta t_4' = 76.8\left(\frac{0.090}{0.120}\right) = 57.6°\text{F}\ (32.0°\text{C}) \tag{4.9}$$

This will result in a component surface temperature of 218.6°F (103.6°C), which is still too high, so that another change must be made. If the ICs are cemented to the PCB, Table 4.2 shows that the temperature rise will be reduced but the cost of the assembly will be increased. If a different PCB edge guide is used, the temperature rise can be reduced. For example, if the edge guide shown in Figure 3.23*b* is used, the thermal resistance across the guide will be 8°C in/watt. The new temperature rise across the guide can be obtained with a direct ratio of the resistance, using Eq. 4.3 for an altitude of 100,000 ft.

$$\Delta t_3' = 28.1\left(\frac{8}{12}\right) = 18.7°\text{F}\ (10.4°\text{C}) \tag{4.10}$$

This will now result in a component surface temperature of 209.2°F (98.4°C), which is slightly less than the maximum allowable temperature for the 100,000 ft condition, so that the design is now satisfactory.

4.4 HOW TO MOUNT HIGH POWER COMPONENTS

High power components require special care for mounting, because temperatures can rise very rapidly and failures can occur quickly if the mounting interface conditions change [9]. Stud mounted diodes and transistors, which use insulating washers, must be mounted with care. Some types of insulating washers will deform and cold-flow after temperature cycling tests. This can result in a reduced mounting interface pressure between the component and the heat sink. This loose condition may not be noticed during assembly or inspection if a conformal coating is used, because the coating will tend to hold the parts in place. However, in any vibration or shock environments, the conformal coating may crack and the component will become loose. Without a good heat sink mount, these high power components will fail rapidly.

The insulating washers must be made of materials that will not crack or

SEC et al. v. MRI
SEC Exhibit 1020.101
IPR 2023-00220

cold flow under high interface pressures. They must be capable of withstanding punctures from small sharp foreign particles and must have a high dielectric strength to prevent shorting. The insulating washers should also be easy to manufacture and to install.

Flat and smooth interfaces must be provided for the component and the heat sink mounting surfaces. All parts must be free from burrs and foreign or dirt particles, which would interfere with good heat transfer. The nut on stud mounted devices should be torqued to some predetermined value to ensure a consistent high interface pressure. Some manufacturers have been using Belleville-type spring washers under the nuts to compensate for minor cold flowing in the insulators. These spring washers tend to maintain a high component interface pressure under all conditions. A typical installation is shown in Figure 4.7.

Thermal greases, such as Dow Corning No. 340 and G.E. No. 2850, can increase the interface conductance values as much as 30%. When repairs are made, this thermal grease must be cleaned off and replaced carefully to ensure proper thermal operation. Caution must be exercised with thermal greases when cements or conformal coatings are used. Thermal greases that have a silicone base tend to migrate. In addition, these greases are very difficult to clean off. As a result, they often tend to contaminate clean surfaces, which interferes with the adhesion of cements and conformal coatings.

Junction temperatures must be controlled in high power components to prevent rapid failures. Most component manufacturers will specify the in-

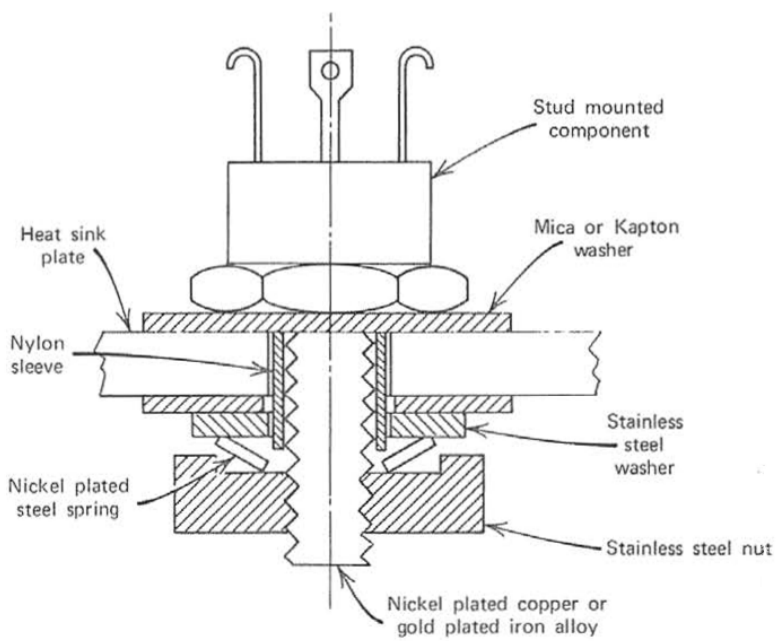

Figure 4.7 Cross section through a stud mounted component.

SEC et al. v. MRI
SEC Exhibit 1020.102
IPR 2023-00220

ternal thermal resistance from the junction of the device to the case using terms such as R_{jc} or Θ_{jc}. For high power components, this value is generally less than 1.0 °C/watt. These manufacturers often rate their components as 175°C or 200°C devices, which means that the junction temperatures are permitted to operate continuously at these values. For high reliable applications, however, the maximum allowable junction temperatures for power devices are usually specified as 125°C. When values this low are hard to achieve for a specific application, it may be possible for the manufacturer to reduce the internal resistance of the device so that the junction temperature will also be reduced for the same power dissipation. If this cannot be done, look for a similar device that has a lower internal resistance before making changes in the component mounting.

It is not always easy to control the junction or chip temperature within a power component. Many interfaces must be controlled to accomplish this. A typical cross section through such a device, showing these internal interfaces, is shown in Figure 4.8 [32].

The mounting position of the high power device within the chassis can often control the hot spot temperature. Sometimes it is relatively easy to reduce the hot spot component temperature just by changing the position of the component. For example, when a high power transistor is mounted at the center of the plug-in PCB, which is cooled by conduction, it will be much hotter than if the same component is mounted at the edge of the same PCB. This is demonstrated in the following sample problem.

4.5 SAMPLE PROBLEM—MOUNTING HIGH POWER TRANSISTORS ON A HEAT SINK PLATE

Several power transistors, which dissipate 5 watts each, are mounted on a power supply circuit board that has a 0.093 in (0.236 cm) thick 5052 alu-

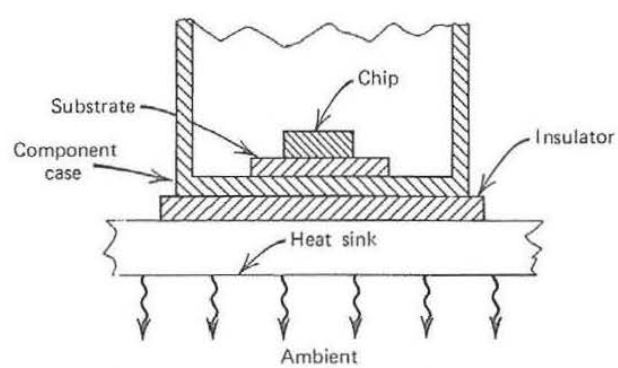

Figure 4.8 Cross section through a power device showing various heat transfer interfaces. The interfaces shown are: chip to substrate; substrate to case; case to insulator; insulator to heat sink; heat sink to ambient.

SEC et al. v. MRI
SEC Exhibit 1020.103
IPR 2023-00220

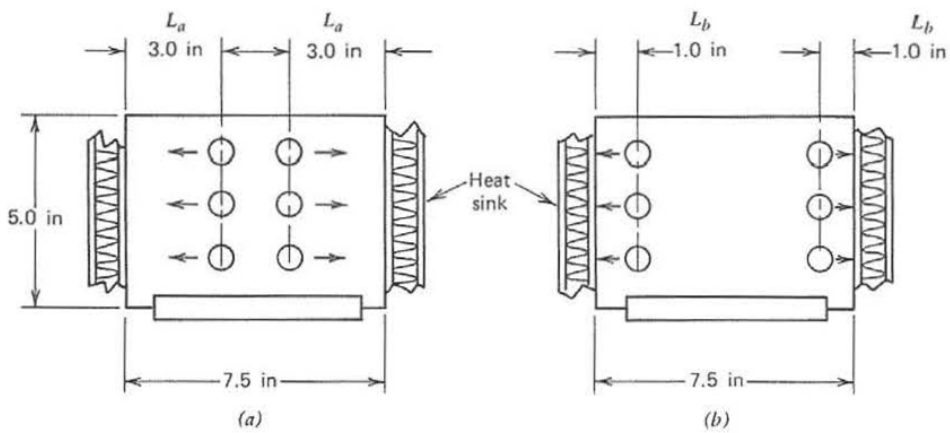

Figure 4.9 Power transistors mounted on an aluminum heat sink plate. (*a*) Old design; (*b*) new design.

minum heat sink plate, as shown in Figure 4.9. Determine how much lower the case temperatures will be when these components are mounted close to the edge of the PCB, as shown in Figure 4.9*b*, instead of the center, as shown in Figure 4.9*a*.

SOLUTION

Since both plug-in PCBs are symmetrical about the center, consider each half of the board for the analysis.

Given $Q = 3 \times 5 = 15$ watts $= 51.2$ Btu/hr $= 3.58$ cal/sec (heat)
$L_a = 3.0$ in $= 0.25$ ft $= 7.62$ cm (length of old design)
$L_b = 1.0$ in $= 0.0833$ ft $= 2.54$ cm (length of new design)
$K = 83$ Btu/hr ft °F $= 0.343$ cal/sec cm °C (conductivity 5052 aluminum)
$A = (5.0)(0.093) = 0.465$ in^2 $= 0.00323$ ft^2 $= 3.0$ cm^2 (area)

Substitute into Eq. 3.2 for the temperature rise at the two different mounting locations, in English units.

$$\Delta t_a = \frac{(51.2 \text{ Btu/hr})(0.25 \text{ ft})}{(83 \text{ Btu/hr ft °F})(0.00323 \text{ ft}^2)} = 47.7°\text{F} \tag{4.11}$$

In metric units:

$$\Delta t_a = \frac{(3.58 \text{ cal/sec})(7.62 \text{ cm})}{(0.343 \text{ cal/sec cm °C})(3.0 \text{ cm}^2)} = 26.5°\text{C} \tag{4.11a}$$

SEC et al. v. MRI
SEC Exhibit 1020.104
IPR 2023-00220

For the mounting position near the edge of the PCB, in English units:

$$\Delta t_b = \frac{(51.2)(0.0833)}{(83)(0.00323)} = 15.9°\text{F} \tag{4.12}$$

In metric units:

$$\Delta t_b = \frac{(3.58)(2.54)}{(0.343)(3.00)} = 8.8°\text{C} \tag{4.12a}$$

This shows that moving the transistors closer to the edge of the PCB can reduce the component surface mounting temperature by 47.7 − 15.9 = 31.8°F (17.7°C).

4.6 ELECTRICALLY ISOLATING HIGH POWER COMPONENTS

High power components, such as transistors and diodes, are often mounted on brackets, which are then mounted on heat sinks. When several different components are mounted on the same sink and the component cases are electrically hot, it is obvious that each component must be electrically isolated from the other. This is usually accomplished with the use of electrical isolators under each component, which are relatively good heat conductors. Various type of insulators are available ranging from a soft silicone rubber filled with thermally conductive metal oxides, to rigid but brittle beryllium oxide washers.

The soft type of silicone rubber gasket will deform when the mounting bolts on stud mounted components are tightened. The soft gasket tends to cold-flow into the small voids on the mating surfaces, which eliminates the air pockets on the component and the bracket. The thermal conductivity of the soft silicone gasket is not very high, but its ability to flow into small voids and its ability to deform to fit warped surfaces help to reduce the thermal resistance across the mounting interface.

Beryllium oxide washers provide a high thermal conductivity, which is equal to that of aluminum, while maintaining good electrical insulation. These washers are very brittle and may crack when mounting bolts are tightened if the mounting interfaces are not flat. If the mounting interfaces have small voids, the washer will not deform to fill them. Therefore, for high power applications and for easy replacement of parts, the washer is usually cemented to the heat sink and the component is usually cemented to the washer with an RTV cement, which can be removed easily.

There are conditions where the power requirements are so critical that no temperature gradient can be permitted between the component and the heat sink. Under these circumstances, the component is usually soldered directly to the heat sink so that the interface temperature rise is eliminated.

SEC et al. v. MRI
SEC Exhibit 1020.105
IPR 2023-00220

Hard anodized aluminum is a good electrical insulator and a good heat conductor. Often, components that have electrically hot cases or noncommon grounds may be mounted on the same heat sink plate, with no other insulation except the anodized finish for protection. This is not a good practice because experience has shown that the anodized finish is very hard and brittle and chips easily. This has often resulted in electrical shorts, which have caused electronic systems to malfunction.

Sometimes the thermal design of an electronic system will provide a component mounting surface temperature of 100°C, but the design is still not satisfactory, because the junction temperature is too high. Many component manufacturers make similar power devices which have different internal thermal resistances from the junction to the case (R_{jc}). Because of this, it is possible to have several different transistors or diodes with case temperatures of 100°C and junction temperatures that may range from 125°C to 150°C or higher. When the maximum allowable junction temperature is specified instead of the case temperature and the analysis shows that the resulting case temperature must be well below 100°C to provide the proper junction temperature, try looking for another transistor or diode which has a lower thermal resistance. If this is not available, a mechanical design change must be made to reduce the component case temperature.

It is extremely important to provide a low thermal resistance heat flow path from the high power dissipating components to the heat sink. When several different interfaces are involved, it may be possible to shift the location of the critical interface (the one with the highest temperature rise) so that the overall temperature rise to the component is reduced.

For example, in the sample problem shown in Figure 3.1, the transistor can be mounted directly to the aluminum bracket, without a mica washer. This will sharply reduce the temperature rise across the component interface, but it will make the bracket electrically hot. The bracket must now be electrically isolated from the heat sink. A thin strip of epoxy fiberglass can be used for the insulator. This can be made much larger than the mica washer because the interface from the bracket to the heat sink is much larger, so that the overall resistance is much lower. This results in a much lower temperature rise. This idea is illustrated in the following sample problem.

4.7 SAMPLE PROBLEM—MOUNTING A TRANSISTOR ON A HEAT SINK BRACKET

Figure 3.1 shows a sample problem where a transistor is mounted on an aluminum bracket with a mica washer insulator. Determine the component case temperature of the transistor when the mica washer is removed and the transistor is mounted directly to the aluminum bracket. Since the bracket will now be electrically hot, add a 0.002 in thick epoxy fiberglass insulator

SEC et al. v. MRI
SEC Exhibit 1020.106
IPR 2023-00220

between the bracket and the heat sink. Compare the case temperatures of the transistor with and without the mica washer insulator.

SOLUTION

The heat transfer path from the transistor to the heat sink wall is broken up into three parts, and each part is examined separately, using Eq. 3.2.

Part 1. Temperature Rise across Cemented Epoxy Fiberglass

Given L = 0.002 in epoxy fiberglass + 0.002 in (epoxy cement)
L = 0.004 in = 0.000333 ft = 0.0101 cm (thickness)
Q = 7.5 watts = 25.6 Btu/hr = 1.79 cal/sec (heat dissipated)
K = 0.167 Btu/hr ft °F (thermal conductivity epoxy PCB + cement)
A = (1.3)(0.75) = 0.975 in^2 = 0.00677 ft^2 (insulator area)

Substitute into Eq. 3.2 using English units.

$$\Delta t_1 = \frac{(25.6)(0.000333)}{(0.167)(0.00677)} = 7.5°\text{F} \tag{4.13}$$

Part 2. Temperature Rise along Aluminum Bracket

This will be the same as the value shown by Eq. 3.4 because the conditions are exactly the same.

$$\Delta t_2 = 41.1°\text{F} \qquad \text{(ref. Eq. 3.4)}$$

Part 3. Temperature Rise across Transistor Interface without Mica Washer

Table 3.3 is used to determine the temperature rise across the transistor interface, considering a No. 10-32 bolt stud.

R = 0.60 °C/watt (dry interface; ref. Table 3.3)
Q = 7.5 watts

$$\Delta t_3 = (7.5 \text{ watts})\left(0.60 \frac{°\text{C}}{\text{watt}}\right) = 4.5°\text{C} = 8.1°\text{F} \tag{4.14}$$

The transistor case temperature is determined by adding the heat sink temperature of 131°F to the three Δt's just computed.

$$t_{\text{trans}} = 131 + 7.5 + 41.1 + 8.1 = 187.7°F \tag{4.15}$$

Comparing Eqs. 4.15 and 3.6 shows there can be a net saving of 35.7°F

SEC et al. v. MRI
SEC Exhibit 1020.107
IPR 2023-00220

by removing the mica washer and reducing the thickness of the epoxy cement while adding an insulator at the bracket interface to the heat sink.

4.8 POTTED MODULES

Electronic components with high heat densities, or components that must operate in severe vibration and shock environments, are often encapsulated (or potted) in various types of foams, epoxies, and silicone compounds. Thermally conductive additives, such as aluminum powder and metal oxides, may also be used to improve the overall thermal conductivity of the potting material.

Aluminum powder additives can increase the thermal conductivity of an epoxy by a factor of 10. However, experience with aluminum powder has shown that shorts can develop under certain circumstances. Tests on potted modules, which are filled with aluminum powder, show that when they are machined with sharp cutters, there will be no shorts between two points on the machined surfaces. However, when a dull tool, such as the tip of a screwdriver, is drawn across the machined surface, there will be electrical continuity between any two points within the groove. Apparently, a sharp machine cutting tool generates a clean cut on the small aluminum particles. A dull tool, on the other hand, smears the soft particles so that they overlap and join one another to form an electrically conductive path, which can cause short circuits.

High power transformers and chokes are often potted in thermally conductive epoxies to improve their heat transfer. These devices have a large amount of iron and copper, which are good heat conductors themselves. However, it is still necessary to provide a low resistance thermal path from the copper and iron to the ultimate heat sink, to prevent overheating in severe operating environments.

Discrete electronic components such as resistors, capacitors, diodes, and transistors are often potted in small modules to improve their vibration and shock resistance or to provide a single compact package that can be handled and mounted like a single component. Heat removal can be a problem, even for packages with relatively low power dissipations, unless proper attention is given to the packaging of these components.

The orientation of the component electrical lead wires within the potted module can sharply influence the heat transfer characteristics. This is because as much as 50% of the heat generated within some components may be conducted through the metal lead wires. In addition, the thermal conductivities of the various cylindrical component bodies on the resistors, capacitors, and diodes are much higher than the thermal conductivity of the plain potting material. For the lowest temperature rise along a given length, the heat flow path should therefore be parallel to the cylindrical axes of the component bodies.

SEC et al. v. MRI
SEC Exhibit 1020.108
IPR 2023-00220

Internal heat sinks can be used effectively in potted modules. When several components have high power dissipations, they can be mounted on insulated aluminum or copper strips before the potting compound is added. The aluminum or copper strips should then be brought close to the heat transfer surface for efficient heat removal. These strips will reduce the internal thermal resistance and reduce local hot spot temperatures.

When transistor heat sinks are required within a potted module, a good heat flow path can often be provided by mounting the transistors upside down, with their hat sections on metal heat sink strips, as shown in Figure 4.10.

When the module is to be mounted to a cold plate, it may be necessary to machine the mounting surface flat to ensure a good thermal interface for efficient heat removal.

Many potting compounds have a high coefficient of thermal expansion, which can cause problems in electronic systems that must be capable of operating over a wide temperature range. Most potting compounds will expand and contract through large displacements over a temperature range from −65°F (−54°C) to +185°F (+85°C). To avoid cracked components and broken solder joints, a thin resilient conformal coating should be applied to the entire module before it is potted.

The effective thermal conductivity of the potted module can be increased by spreading a number of thin copper wires throughout the module. This will increase the heat flow in the areas adjacent to the wires, which can help to reduce hot spot temperatures. This technique is demonstrated in the following sample problem.

4.9 SAMPLE PROBLEM—TEMPERATURE RISE IN A POTTED MODULE

Determine the temperature rise from the mounting surface to the top edge of the components in the potted module, which is shown in Figure 4.11, for

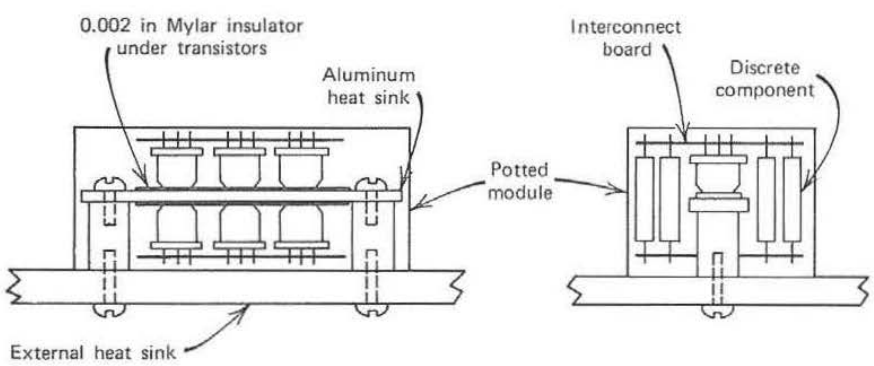

Figure 4.10 Cross section through a potted module showing an internal heat sink.

SEC et al. v. MRI
SEC Exhibit 1020.109
IPR 2023-00220

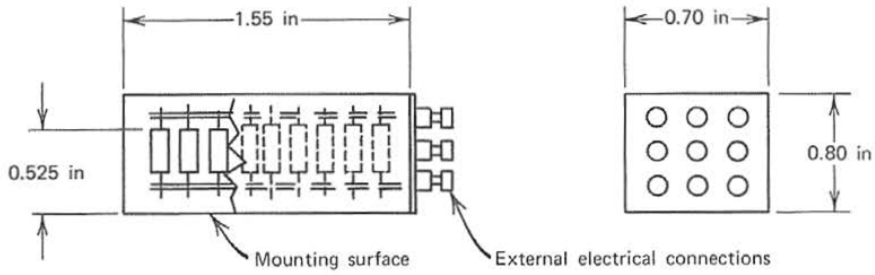

Figure 4.11 Potted module with a uniform power dissipation.

two different conditions:

1 Using an epoxy compound filled with aluminum oxide.
2 Using the compound in (1), but with 12 0.031 in (0.0787 cm) diameter copper wires distributed through the module adjacent to the components.

The power dissipation of the module is 2.0 watts and it is uniformly distributed through the module.

SOLUTION

Condition 1. Epoxy Potting Filled with Aluminum Oxide

The following information is required:

Given Q = 2.0 watts = 6.83 Btu/hr = 0.478 cal/sec (heat) (see Table 1.1 for power conversions)
L_e = 0.525 in = 0.0437 ft = 1.333 cm (epoxy length)
K_e = 1.25 Btu/hr ft °F = 0.00516 cal/sec cm °C (epoxy conductivity; see Table 3.2 for conductivity and Table 1.2 for conversions to English and metric units)
A_e = (1.55)(0.70) = 1.085 in² = 0.00753 ft² = 7.0 cm²
A_e = (cross section area along heat flow path)

Substitute into Eq. 3.2 for the temperature rise in epoxy.

$$\Delta t_1 = \frac{(6.83)(0.0437)}{(1.25)(0.00753)} = 31.7°\text{F} \tag{4.16}$$

Condition 2. Epoxy Potting with Copper Wires

A parallel heat flow path exists through the module. One path is through the epoxy, and one path is through the copper wires, as shown in Figure 4.12.

SEC et al. v. MRI
SEC Exhibit 1020.110
IPR 2023-00220

The following information is required:

Given $L_{cu} = 0.525$ in $= 0.0437$ ft $= 1.333$ cm (copper length)
$K_{cu} = 166$ Btu/hr ft °F $= 0.685$ cal/sec cm °C (copper conductivity)
$A_{cu} = (\pi/4)(0.031)^2(12) = 0.00906$ in^2 $= 0.0000629$ ft^2
$A_{cu} = 0.0584$ cm^2 (copper cross section area)

Net area of epoxy without copper wires:

$$A_n = A_e - A_{cu} = 0.00753 - 0.0000629 = 0.00747 \text{ ft}^2$$

Substitute into Eq. 3.14 for the epoxy thermal resistance.

$$R_e = \frac{0.0437 \text{ ft}}{(1.25 \text{ Btu/hr ft °F})(0.00747 \text{ ft}^2)} = 4.68 \frac{\text{hr °F}}{\text{Btu}} \tag{4.17}$$

Substitute into Eq. 3.14 for the copper thermal resistance.

$$R_{cu} = \frac{0.0437}{(166)(0.0000629)} = 4.18 \frac{\text{hr °F}}{\text{Btu}} \tag{4.18}$$

Substitute Eqs. 4.17 and 4.18 into Eq. 3.17 for the combined thermal resistance of the epoxy and copper in condition 2 for the parallel flow path.

$$\frac{1}{R_2} = \frac{1}{4.68} + \frac{1}{4.18}$$

$$R_2 = 2.21 \frac{\text{hr °F}}{\text{Btu}} \tag{4.19}$$

Substitute into Eq. 3.15 to obtain the temperature rise through the module with the potting and the copper wires.

$$\Delta t_2 = QR_2 = \left(6.83 \frac{\text{Btu}}{\text{hr}}\right)\left(2.21 \frac{\text{hr °F}}{\text{Btu}}\right) = 15.1\text{°F} \tag{4.20}$$

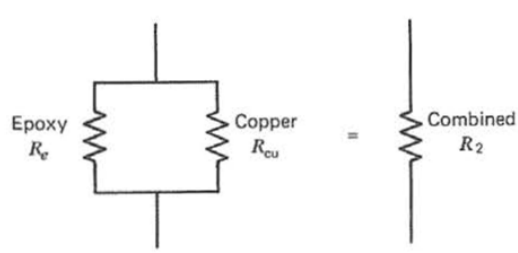

Figure 4.12 Parallel heat flow path through a potted module.

SEC et al. v. MRI
SEC Exhibit 1020.111
IPR 2023-00220

Comparing Eq. 4.16 with Eq. 4.20 shows that adding 12 thin copper wires to the potted module, parallel to the heat flow path, can reduce the average temperature rise about 50%.

4.10 COMPONENT LEAD WIRE STRAIN RELIEF

Electronic components have a wide variety of lead wire sizes, shapes, materials, and arrangements. One thing they all have in common is the potential for failure if the components are mounted without the proper strain relief in the lead wire. The lack of strain relief, or improper strain relief, can cause broken solder joints, lifted printed circuit pads, cracked components, cracked glass headers, short circuits, and many other strain related problems in systems that must operate over a wide temperature range. Special attention must be given to the component mounting techniques for electronic systems that will be exposed to temperatures that range from −65°F(−54°C) to + 185°F (+85°C). This type of environment will generate high strains in elements that have different coefficients of expansion. High strains lead to high creep rates in solder joints, which can produce failures in a very short period of time. Solder joint stresses should be limited to a maximum value of 400 lb/in^2 (28,148 g/cm^2) for the foregoing temperature range to prevent temperature induced strain failures [20, 21, 33–35].

The trend in electronic packages is toward increased component density, so that the size of the lead wire strain relief has been constantly shrinking. A large strain relief means more space per component, which reduces the number of components that can be placed on a circuit board. However, when the strain relief gets too small, the problems begin to multiply rapidly.

Strains and stresses that are developed in the electronics are often the result of expansions and contractions in the structural elements of the system due to temperature changes. Expansion coefficients, which vary substantially for different materials, should be evaluated for their effects on the strain relief, to prevent excessive stresses from developing.

Cylindrical components such as resistors, capacitors, and diodes with axial leads should be provided with a minimum strain relief of about 0.100 in (0.254 cm), as shown in Figure 4.13*a* for lap and dip solder joints. Experience has shown that this type of strain relief will provide sufficient safety over the temperature range from −65°F (−54°C) to +185°F (+85°C) even with aluminum heat sinks.

Large rectangular components, such as transformers and chokes, generally have large wires, often with diameters of about 0.032 in (0.0813 cm). A large strain relief, such as shown in Figure 4.13*b* and *c*, may be required to prevent printed circuit pads from lifting on lap soldered joints.

Components are often placed closer together in high density packages, so that there is less room for a good strain relief in the lead wires. A longer

SEC et al. v. MRI
SEC Exhibit 1020.112
IPR 2023-00220

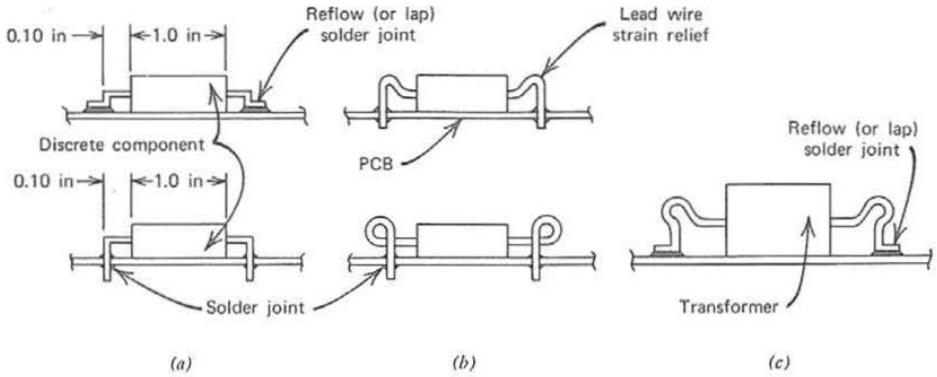

Figure 4.13 Typical lead wire strain relief for electronic components.

strain relief can be obtained by looping the lead wire, as shown in Figure 4.13*b*, to reduce the overall length of the component.

Transistors in TO-5 and TO-18 cans are often mounted on PCBs with the base of the transistor flush with the board, as shown in Figure 4.14*a*. This is a poor practice, because the lack of a strain relief in the lead wires can result in fractured solder joints as the circuit board thickness expands and contracts with temperature changes.

Flush mounted components may also produce trapped gas pockets in the electrical lead wire areas when the component is flow soldered to the PCB.

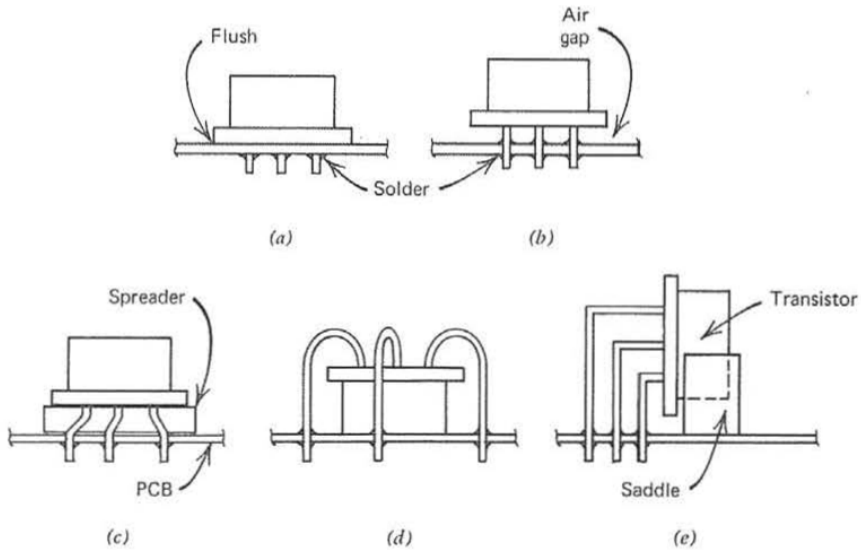

Figure 4.14 Various methods for mounting transistors. (*a*) Straight through (poor); (*b*) air gap (good low power); (*c*) spreader (good); (*d*) waterfall (good); (*e*) side saddle (good).

SEC et al. v. MRI
SEC Exhibit 1020.113
IPR 2023-00220

If the heated air is not permitted to escape from the small area around the lead wire, the increased air pressure will prevent the solder from wicking up the lead wire in the plated throughhole. This will result in a small solder fillet only at the bottom of the PCB. The outer appearance of the solder joint will seem normal, but the joint may have only 25% of the required amount of solder, which will result in a very weak solder joint that can fail very rapidly. Several techniques for mounting transistors are shown in Figure 4.14.

DIPs must also be carefully mounted, because they have very stiff lead wires with almost no strain relief. DIPs are made to be plugged into circuit boards, using the lead wires as electrical connectors, so that the lead wires must be rigid. When the dip leads are soldered to the PCB, this rigidity may produce solder joint failures when the body of the dip is mounted flush against the PCB. During temperature cycling, the expansion of the DIP body and the expansion of the epoxy fiberglass circuit board may be sufficient to produce an excessive strain in the solder joint, producing failures after several dozen cycles over a wide temperature range.

For conduction cooled systems, the body of the DIP should be cemented to the heat sink with a thermally conductive material that is resilient and will yield under the loads developed by the temperature cycle. RTV cements work well for applications of this type if the cement can be controlled to a thickness of about 0.005 to 0.010 in (0.0127 to 0.0254 cm). When the thickness of the cement exceeds 0.010 in, the thermal resistance from the component to the PCB may be too high, resulting in a high junction temperature. When the cement thickness is less than about 0.001 in (0.00254 cm), there will not be enough room for expansion at high temperatures, and the solder joints may again experience high stresses, resulting in joint failures after several dozen cycles.

DIPs have shoulders in their lead wires, which normally keeps the body of the DIP raised above the PCB. When metal strips are used under the component body for conduction cooled systems, the metal strip should be thick enough to bridge the resulting gap under the component body on high power dissipating DIPs. This should include any cements or tapes for holding the DIP to the heat sink.

When the power dissipation on a DIP is relatively low, below about 0.200 watt, it may not be necessary to cement the DIP to the heat sink in conductively cooled systems. Instead, a controlled air gap may be used under the DIP body. Air has a relatively low resistance for a small air gap. If the gap can be controlled to about 0.010 in (0.0254 cm), it may not result in extremely high junction temperatures. Some typical mounting installations for DIPs are shown in Figure 4.15.

The approximate temperature rise across the 0.010 in air gap for a power dissipation of 0.200 watt can be determined by considering only the heat conducted from the body of the DIP and ignoring the heat that is conducted

SEC et al. v. MRI
SEC Exhibit 1020.114
IPR 2023-00220

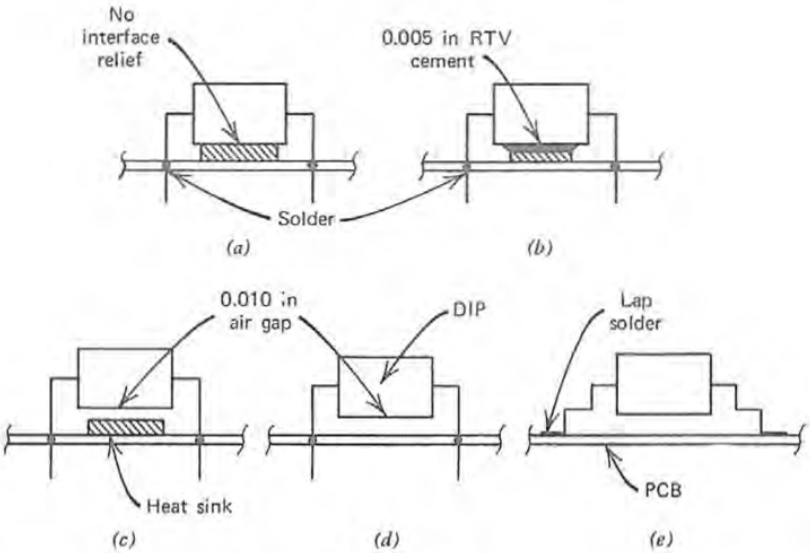

Figure 4.15 Various types of strain reliefs for DIPs mounted on PCBs. (*a*) No strain relief (poor); (*b*) RTV strain relief (good); (*c*) air gap strain relief (good low power); (*d*) air gap strain relief no sink (good low power); (*e*) air gap strain relief no sink (good low power).

through the lead wires. The following information is required:

$Q = 0.200$ watt $= 0.683$ Btu/hr (power dissipation)
$L = 0.010$ in $= 0.000833$ ft (length of air gap)
$K = 0.018$ Btu/hr ft °F (air conductivity at 200 °F; ref. Figure 6.28)
$A = (0.30)(0.70) = 0.21$ in^2 $= 0.00146$ ft^2 (area of DIP)

Substitute into Eq. 3.2 for the temperature rise across the DIP mounting interface.

$$\Delta t = \frac{(0.683)(0.000833)}{(0.018)(0.00146)} = 21.6°\text{F} \tag{4.21}$$

If the air gap is doubled to 0.020 in (0.0508 cm), the temperature rise across the mounting interface will also double, to 43.2°F (24°C).

One of the problems with an air gap is that it is difficult to control. The air gap under a DIP can change when the PCB warps as the system heats. Also, rough handling may sharply change the size of the air gap, which would affect the heat transfer characteristics.

The thermal resistance of a small air gap will not change much, even at altitudes as high as 75,000 ft. Therefore, an air gap can still be used to cool low power dissipating DIPs at these altitudes. Air gaps will not provide

SEC et al. v. MRI
SEC Exhibit 1020.115
IPR 2023-00220

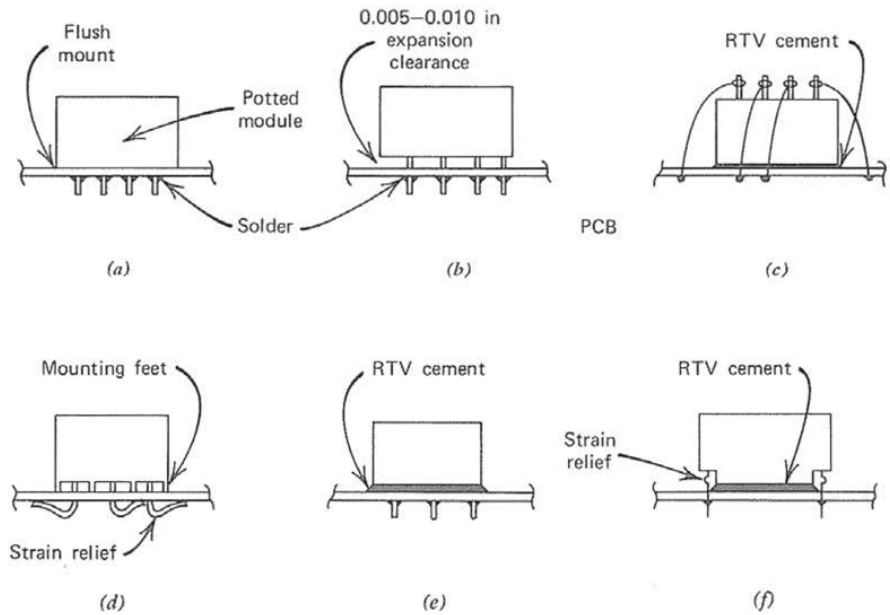

Figure 4.16 Various methods for mounting potted modules to PCBs. (*a*) No strain relief, no outgassing vents (poor); (*b*) air gap strain relief (good); (*c*) waterfall strain relief (good); (*d*) strain relief with outgassing provisions (good); (*e*) strain relief but no outgassing provisions (poor); (*f*) strain relief with outgassing provisions (good).

cooling in the hard vacuum environment of outer space, where there are no gases present to conduct away the heat.

Potted modules are often made with the electrical lead wires extending from one face of the unit. This face may then be mounted flush to a PCB and the lead wires will extend through plated through holes where they are soldered. If no strain relief is provided in the wires, the relatively high coefficients of expansion in the PCB and the potting may produce solder joint failures after a few dozen temperature cycles.

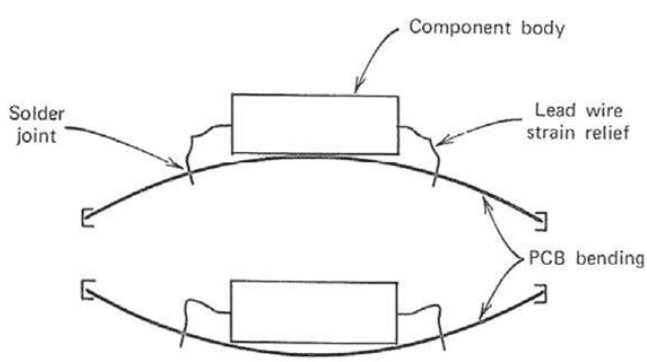

Figure 4.17 Circuit board flexing in a vibration environment.

SEC et al. v. MRI
SEC Exhibit 1020.116
IPR 2023-00220

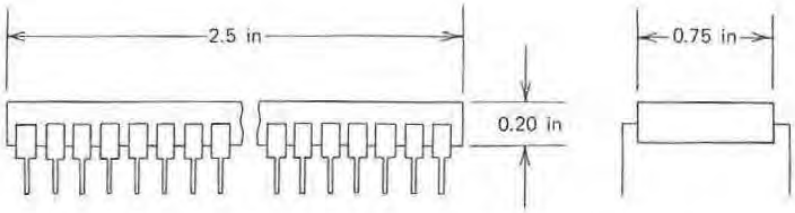

Figure 4.18 Typical microprocessor package.

Some type of strain relief should always be provided in the mounting geometry, to allow a small amount of relative motion to occur, to reduce the loads and strains developed in the solder joints. The maximum allowable thermal stresses in these solder joints should be limited to a value of about 400 psi under the most extreme temperature condition, to ensure a safe design. Some typical mounting configurations for potted modules are shown in Figure 4.16.

Conformal coatings are often used to protect the circuits and components from dirt and moisture. These coatings must not be permitted to fill in or to bridge the strain relief in the electrical lead wires or to fill in the strain

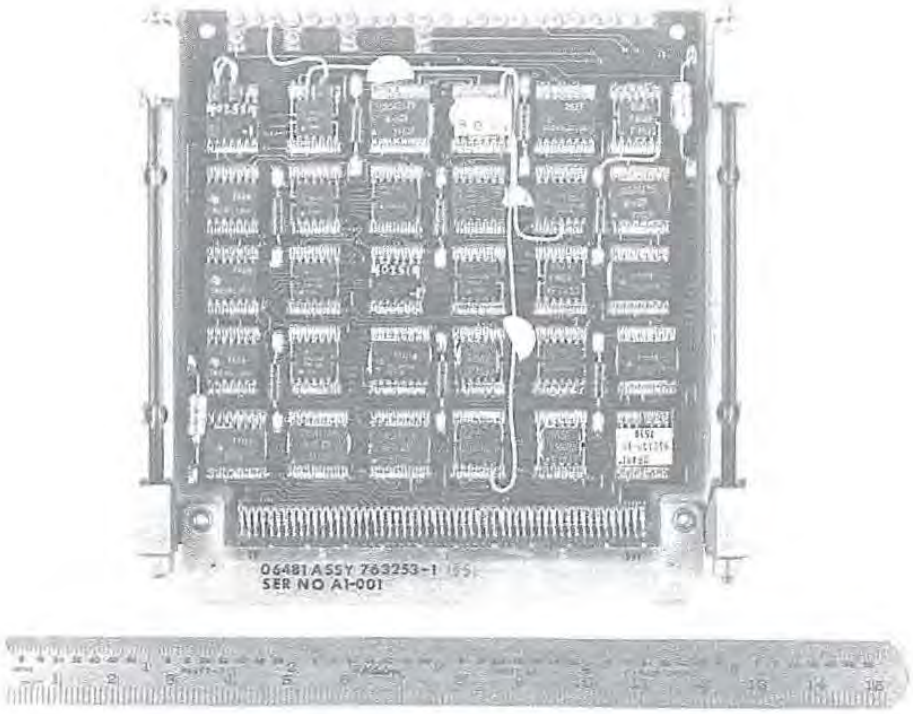

Figure 4.19 Composite aluminum PCB with side wedge clamps. (Courtesy Litton Systems, Inc.)

SEC et al. v. MRI
SEC Exhibit 1020.117
IPR 2023-00220

relief gap under large flat components that have leads that extend from the bottom surface. The bridging will increase the solder joint stresses because of the high coefficient of expansion of most conformal coatings, especially at the high tempertatures.

Circuit boards that must operate in severe vibration and shock environments should have electronic components mounted with an adequate lead wire strain relief. The type of lead wire and solder joint stresses developed in a vibration and shock environment are substantially different from the stresses developed in a thermal cycling environment. The number of stress reversals developed in a vibration environment can run into several hundred million. Therefore, stress concentrations such as nicks, scratches, and small bend radii become important and must be avoided, if possible [1].

Dynamic stresses in the lead wires are developed as the circuit board is forced to bend back and forth in a vibration environment. The condition is

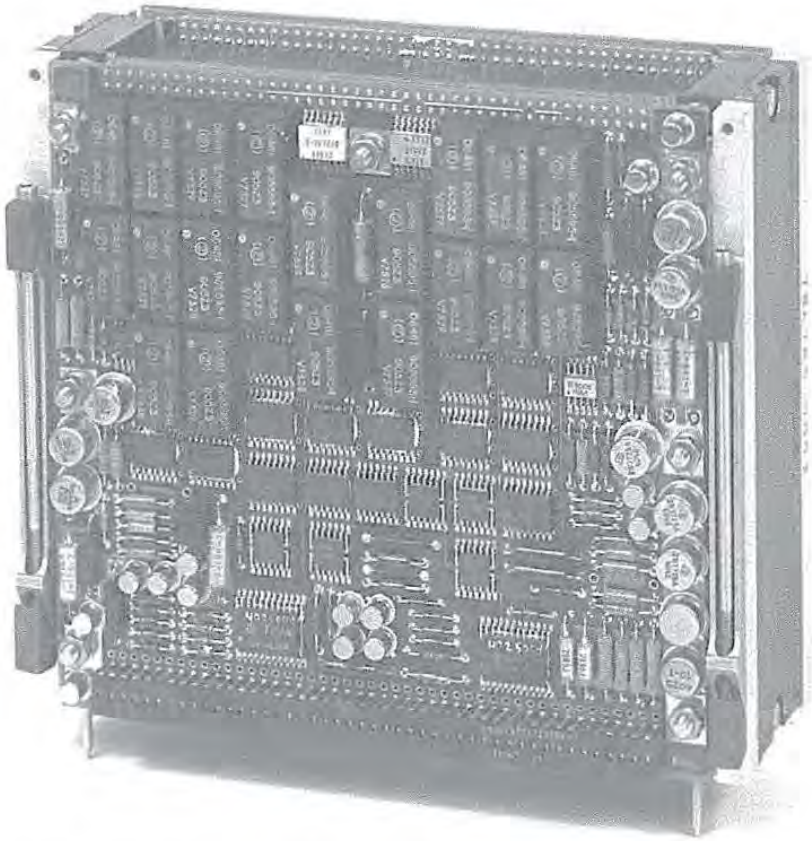

Figure 4.20 Plug-in memory module designed for conduction cooling, uses side wedge clamps that provide high pressures at the thermal mounting interfaces. (Courtesy Litton Systems, Inc.)

SEC et al. v. MRI
SEC Exhibit 1020.118
IPR 2023-00220

most severe during the PCB resonance, when the displacement amplitudes can become quite large. As the PCB bends back and forth, it forces the electrical lead wires on the components to bend back and forth, as shown in Figure 4.17. This can result in lead wire and solder joint failures when the stress levels and the number of fatigue cycles are high enough [1].

Microprocessors are particularly susceptible to solder joint and lead wire vibration faiiures. Microprocessors are manufactured in the form of a large DIP package. Typical dimensions are generally about 2.5 × 0.75 × 0.20 in (6.35 × 1.905 × 0.508 cm), as shown in Figure 4.18. The long component body length will result in an increase in the solder joint and lead wire stresses during vibration when the component is mounted at the center of the PCB. A high resonant frequency is required to keep the dynamic displacements low during resonant conditions, to provide a long fatigue life for the lead wires and solder joints. See reference [1] for more information on mounting electronic components that must operate in severe vibration environments.

Figure 4.19 shows an aluminum core composite circuit board with lap soldered electronic components.

Figure 4.20 shows a memory module made up of several circuit boards bolted together.

SEC et al. v. MRI
SEC Exhibit 1020.119
IPR 2023-00220

5

Practical Guides for Natural Convection and Radiation Cooling

5.1 HOW NATURAL CONVECTION IS DEVELOPED

Heat transfer by natural convection will occur when there is a change in the density of the fluid, which can be a gas or a liquid. Fluids tend to expand as they are heated, which results in a reduced density. In a gravity field, the fluid, which has a lower density, is lighter and therefore rises, creating a movement in the fluid which is called convection. This movement or convection permits the fluid to pick up heat and carry it away. When the fluid movement is produced only by a difference in the fluid density, the process is called natural or free convection. When the fluid movement is mechanically induced by means of pumps or fans, the process is called forced convection or forced circulation.

The driving force for natural convection is not very great because it depends upon the density change in the fluid. Therefore, any small obstacle or resistance in the flow path will sharply reduce the fluid flow rate, and therefore the cooling rate. Heat transfer by natural convection is more efficient if a well-defined, clear, unobstructed flow path is made available. Otherwise, the amount of heat carried away may be much less than anticipated and the resulting temperatures may be much higher than expected.

Natural convection heat transfer is extremely easy to use because no auxiliary equipment is required. It is also very reliable, because there are no auxiliary pumps or fans to malfunction or wear out.

The basic relation for free convection in a fluid (gas or liquid) is shown by three dimensionless ratios involving the Nusselt number, the Grashof

SEC et al. v. MRI
SEC Exhibit 1020.120
IPR 2023-00220

number, and the Prandtl number, as shown in Eq. 5.1 [15, 17, 24]:

$$\underbrace{\frac{hL}{K}}_{\text{Nusselt number}} = C\underbrace{\left(\frac{L^3\rho^2 g\beta\,\Delta t}{\mu^2}\right)^m}_{\text{Grashof number}} \underbrace{\left(\frac{C_p\mu}{K}\right)^n}_{\text{Prandtl number}} \tag{5.1}$$

where C = constant based upon geometry of surface
L = length along heat flow path (ft)
ρ = density of fluid (gas or liquid) (lb/ft^3)
g = acceleration of gravity = 4.17×10^8 (ft/hr^2)
β = volumetric expansion = 1/°R (or bulk modulus)
Δt = temperature difference (°F)
μ = viscosity (lb/ft hr)
C_p = specific heat of fluid (Btu/lb °F)
K = thermal conductivity (Btu/hr ft °F)
h = convection coefficient (Btu/hr ft^2 °F)

Experiments have shown that the exponents m and n are very nearly equal. Free convection calculations for electronic equipment can be made using an exponent value of 0.25.

Several items in Eq. 5.1 can be combined to simplify the convection relation as follows. Let

$$a = g\beta\rho^2\frac{C_p\mu}{K}$$

Then

$$h = C\frac{K}{L}(aL^3\,\Delta t)^{0.25} \tag{5.2}$$

The relation $Ka^{0.25}$ is fairly constant over a wide temperature range from 0°F to 200°F, with a value of about 0.52. Substituting this value into Eq. 5.2 results in the simplified natural convection equation for the laminar flow range [7, 8].

$$h = 0.52C\left(\frac{\Delta t}{L}\right)^{0.25} \tag{5.3}$$

Some typical values for C, which have been determined by experiments in free air, are shown in Table 5.1 [7, 8].

The characteristic length (L) is determined by the flow path the cooling air takes as it passes over the heated surface. Some typical values are shown in Table 5.2 [3, 7, 8].

The characteristic dimension for a flat horizontal rectangular plate is

SEC et al. v. MRI
SEC Exhibit 1020.121
IPR 2023-00220

Table 5.1 Values for Constants Based upon the Surface Geometry

Shape and Position	Value of C
Vertical plates	0.56
Long vertical cylinders and pipes	0.55
Horizontal cylinders and pipes	0.52
Horizontal plates facing upward	0.52
Horizontal plates facing downward	0.26
Spheres (where L = radius)	0.63
Small parts, also wires, (L = diameter)	1.45
Components on circuit boards	0.96
Small components in free air	1.39
Components in cordwood modules	0.48

obtained by using the geometric mean of the length and width. Considering a rectangular plate 12 × 6 in, Table 5.2 shows that the characteristic length would be as follows:

$$L = \frac{2(12)\,(6)}{12 + 6} = \frac{144}{18} = 8.0 \text{ in} = 0.606 \text{ ft}$$

For square plates, the characteristic dimension is the length of one side.

Table 5.2 Characteristic Length for Various Surfaces

Surface	Position	Characteristic Length (ft)
Flat plane	Vertical	Height, limited to 2 ft[a]
Flat plane (nonrectangular)	Vertical	$\frac{\text{Area}}{\text{Horizontal width}}$
Flat plane (circular)	Vertical	$\frac{\pi}{4} \times$ diameter
Cylinder	Vertical	Height, limited to 2 ft
Flat plane	Horizontal	$\frac{2(\text{Length} \times \text{width})}{\text{Length} + \text{width}}$
Cylinder	Horizontal	Diameter
Sphere	Any	Radius

[a] *When the actual plate height* L *exceeds 2 ft, use a maximum value of 2 ft in Eq. 5.3.*

SEC et al. v. MRI
SEC Exhibit 1020.122
IPR 2023-00220

For a 9.0 in square plate, Table 5.2 gives the correct value as follows:

$$L = \frac{2(9)\,(9)}{9+9} = \frac{162}{18} = 9.0\text{ in} = 0.75\text{ ft}$$

5.2 NATURAL CONVECTION FOR FLAT VERTICAL PLATES

The simplified laminar flow natural convection equation for a heated flat vertical plate at ordinary temperatures and sea level conditions is obtained with Eq. 5.3 and Table 5.1, as shown in Eq. 5.4. The temperature difference Δt must be in °F and the vertical height L must be in feet.

$$h_c = 0.29\left(\frac{\Delta t}{L}\right)^{0.25} \tag{5.4}$$

The average natural convection coefficient h_c defines the thermal characteristics of the air film, which clings to the plate and restricts the flow of heat from the plate to the surrounding ambient air. A cross section through the plate and air film is shown in Figure 5.1.

Laminar flow occurs along the lower edges of a tall plate. The transition from laminar to turbulent flow generally starts at a distance of about 2 ft from the bottom edge of the plate. Turbulent flow occurs at distances greater than approximately 2 ft, depending upon the temperature difference from the plate to the ambient.

5.3 NATURAL CONVECTION FOR FLAT HORIZONTAL PLATES

The simplified laminar flow natural convection equation for a heated horizontal flat plate facing upward or a cooled plate facing downward is obtained

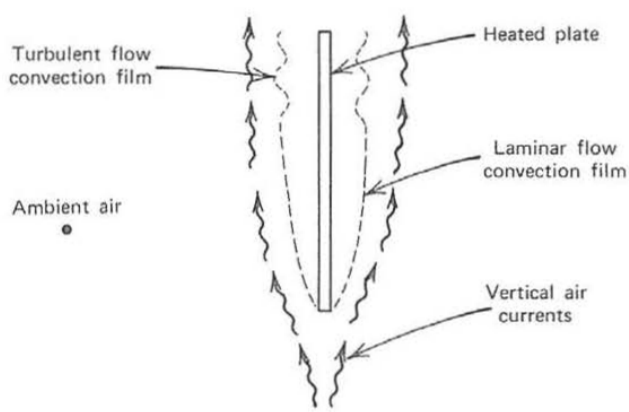

Figure 5.1 Cross section through a vertical heated plate.

SEC et al. v. MRI
SEC Exhibit 1020.123
IPR 2023-00220

from Eq. 5.3 and Table 5.1, as shown in Eq. 5.5. The temperature difference Δt must be in °F and the L dimension must be in feet.

$$h_c = 0.27\left(\frac{\Delta t}{L}\right)^{0.25} \tag{5.5}$$

Cooling air flows in along the sides around the perimeter of the horizontal plate to replace the heated air, which rises as shown in Figure 5.2.

When the heated horizontal plate faces downward, the cooling air must flow along the bottom surface to the outer edges of the plate before it can rise, as shown in Figure 5.3. This increases the flow resistance, which reduces the cooling effectiveness.

The convection coefficient for a heated plate facing downward or a cooled plate facing upward is shown in Eq. 5.6. Its value is about half that of a heated plate facing upward.

$$h_c = 0.13\left(\frac{\Delta t}{L}\right)^{0.25} \tag{5.6}$$

5.4 HEAT TRANSFERRED BY NATURAL CONVECTION

Once the convection coefficient h_c has been established, the amount of heat that can be carried away is determined from Eq. 5.7 [3, 7, 8].

$$Q = h_c A\ \Delta t \tag{5.7}$$

The units are the same as the relations shown in Eq. 3.53 except that the A represents the area of the heated surface, Δt represents the temperature difference between the heated surface and the surrounding ambient air, and h_c represents the convection coefficient.

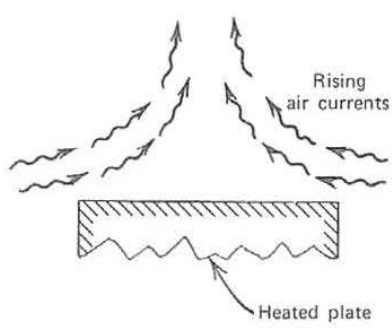

Figure 5.2 Heated horizontal surface facing upward.

SEC et al. v. MRI
SEC Exhibit 1020.124
IPR 2023-00220

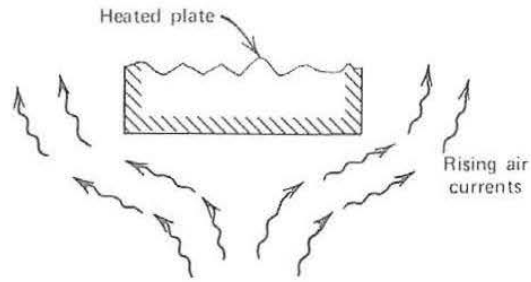

Figure 5.3 Heated horizontal surface facing downward.

5.5 SAMPLE PROBLEM—VERTICAL PLATE NATURAL CONVECTION

Determine the amount of heat that can be carried away from the vertical plate shown in Figure 5.4, considering only natural convection.

SOLUTION

Assuming laminar flow conditions (it is not known at this point if the flow is laminar or turbulent), the natural convection coefficient is determined from Eq. 5.4.

$$h_c = 0.29\left[\frac{200 - 80\ ^\circ\text{F}}{4\ \text{in}/(12\ \text{in/ft})}\right]^{0.25} = 1.26\ \frac{\text{Btu}}{\text{hr ft}^2\ ^\circ\text{F}}$$

$$A = \frac{(8.0)(4.0)\ \text{in}^2}{144\ \text{in}^2/\text{ft}^2}\ (\text{two surfaces}) = 0.444\ \text{ft}^2$$

$$\Delta t = 200 - 80 = 120^\circ\text{F}$$

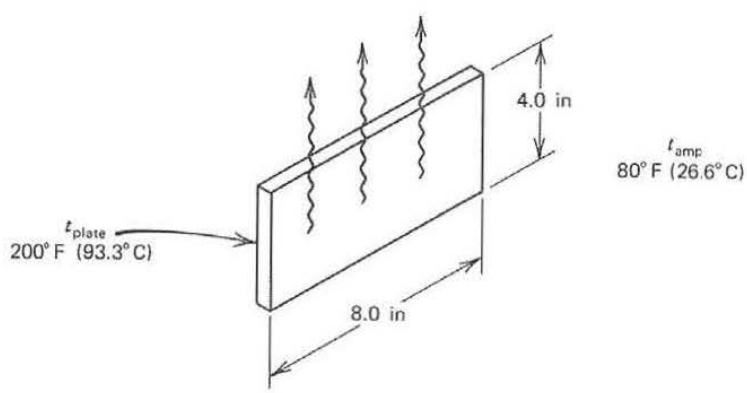

Figure 5.4 Vertical heated aluminum plate.

SEC et al. v. MRI
SEC Exhibit 1020.125
IPR 2023-00220

Substitute into Eq. 5.7 for the amount of heat convected away, using English units.

$$Q = \left(1.26 \frac{\text{Btu}}{\text{hr ft}^2\ ^\circ\text{F}}\right)(0.444\ \text{ft}^2)(120^\circ\text{F}) = 67.1 \frac{\text{Btu}}{\text{hr}} \tag{5.8}$$

Since 1 watt = 3.413 Btu/hr,

$$Q = \frac{67.1}{3.413} = 19.6 \text{ watts}$$

Tables 1.3 and 1.10 can be used to convert from English units to metric units.

$$h_c = \left(1.26 \frac{\text{Btu}}{\text{hr ft}^2\ ^\circ\text{F}}\right)(0.000135) = 0.000170 \frac{\text{cal}}{\text{sec cm}^2\ ^\circ\text{C}}$$

$$A = (0.444\ \text{ft}^2)(929) = 412.5\ \text{cm}^2$$

$$Q = \left(0.000170 \frac{\text{cal}}{\text{sec cm}^2\ ^\circ\text{C}}\right)(412.5\ \text{cm}^2)(66.7^\circ\text{C}) = 4.68 \frac{\text{cal}}{\text{sec}} \tag{5.9}$$

Since 1 watt = 0.239 cal/sec,

$$Q = \frac{4.68}{0.239} = 19.6 \text{ watts}$$

The amount of heat lost by natural convection will be different if the plate is rotated 90°, as shown in Figure 5.5. The vertical height L is now 8 in

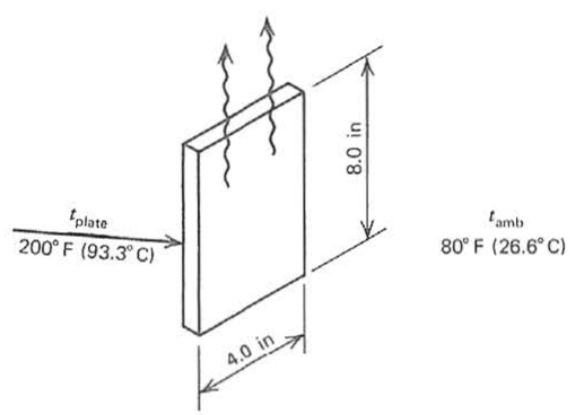

Figure 5.5 Vertical heated plate rotated 90°.

instead of 4 in. Using Eq. 5.4 once again, we obtain

$$h_c = 0.29\left(\frac{120}{8/12}\right)^{0.25} = 1.06\frac{\text{Btu}}{\text{hr ft}^2\ °\text{F}}$$

Using Eq. 5.7 with the same plate area and temperature difference yields

$$Q = (1.06)\ (0.444)\ (120) = 56.5\frac{\text{Btu}}{\text{hr}} \tag{5.10}$$

Since 1 watt = 3.413 Btu/hr,

$$Q = 16.5 \text{ watts}$$

When the plate is rotated 90°, the amount of heat lost by natural convection is reduced about 15.8% because of the increased plate height, which reduces the natural convection coefficient.

5.6 TURBULENT FLOW WITH NATURAL CONVECTION

Turbulent flow conditions can develop during natural convection conditions when the temperature difference between the heated surface and the surrounding ambient air is high enough. The convection coefficient for turbulent conditions can be approximated by considering only the temperature difference. For heated vertical plates, the natural convection coefficient for turbulent flow is shown by Eq. 5.11. For heated horizontal plates facing upward, the natural convection coefficient for turbulent flow is shown by Eq. 5.12. The temperature difference must be in °F for these conditions [15, 17, 24, 36].

$$\text{Vertical plates:} \quad h_c = 0.19\Delta t^{0.333} \tag{5.11}$$

$$\text{Horizontal plates:} \quad h_c = 0.22\Delta t^{0.333} \tag{5.12}$$

The temperature difference required to change from laminar flow to turbulent flow for a vertical plate 1 ft high can be determined by setting Eq. 5.4 equal to Eq. 5.11.

$$0.29\left(\frac{\Delta t}{1.0}\right)^{0.25} = 0.19(\Delta t)^{0.333}$$

$$\frac{(\Delta t)^{0.333}}{(\Delta t)^{0.25}} = 1.526$$

$$(\Delta t)^{0.083} = 1.526$$

$$\Delta t = 163°F \tag{5.13}$$

SEC et al. v. MRI
SEC Exhibit 1020.127
IPR 2023-00220

This means that convection heat transfer for a vertical plate 1 ft high will change from laminar flow to turbulent flow when the temperature difference between the plate and the ambient is about 163°F. If the plate is less than 1 ft high, the temperature difference must be greater than 163°F to produce turbulent flow conditions.

The external surfaces of electronic boxes are often available to cool the equipment using natural convection. The heat dissipated by electronic components within the box may be conducted to the outside surfaces, where it is removed by convection. The amount of heat that can be removed is sharply influenced by the temperature difference between the surface of the box and the ambient air and also the surface area of the box.

5.7 SAMPLE PROBLEM—HEAT LOST FROM AN ELECTRONIC BOX

Determine the amount of heat that is lost by natural convection from the external surfaces of the box shown in Figure 5.6. The surface temperature is relatively uniform at 130°F and the ambient temperature is 80°F at sea level conditions. The box is aluminum with an iridited (or chromate) finish that has a low emissivity, so that heat lost by radiation is small and is ignored here.

SOLUTION

The natural convection coefficients for the vertical surfaces is obtained from Eq. 5.4 and Table 5.2.

$$h_c = 0.29\left(\frac{\Delta t}{L}\right)^{0.25}$$

Given $\Delta t = 130 - 80 = 50°\text{F}$
$L = 6.0 \text{ in} = 0.50 \text{ ft}$

$$h_c = 0.29\left(\frac{50}{0.50}\right)^{0.25} = 0.92\ \frac{\text{Btu}}{\text{hr ft}^2\ °\text{F}} \tag{5.14}$$

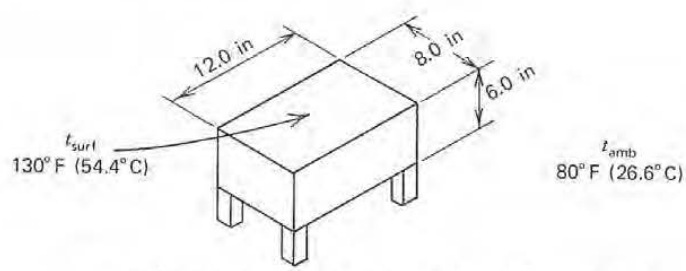

Figure 5.6 Electronic box cooled by natural convection.

SEC et al. v. MRI
SEC Exhibit 1020.128
IPR 2023-00220

The heat lost from the vertical sides of the box is determined from Eq. 5.7. Conversions from English units to metric units are made using Tables 1.3 and 1.10.

$$Q = h_c A \, \Delta t$$

Given $h_c = 0.92 \text{ Btu/hr ft}^2 \text{ °F} = 0.000124 \text{ cal/sec cm}^2 \text{ °C}$

$$A = \frac{[(12)(2) + (8)(2)](6) \text{ in}^2}{144 \text{ in}^2/\text{ft}^2}$$

$$A = 1.667 \text{ ft}^2 = 1548.6 \text{ cm}^2$$
$$\Delta t = 130 - 80 = 50°\text{F} = 27.8°\text{C}$$

In English units:

$$Q_{\text{sides}} = (0.92)(1.667)(50) = 76.7 \frac{\text{Btu}}{\text{hr}} \tag{5.15}$$

In metric units:

$$Q_{\text{sides}} = (0.000124)(1548.6)(27.8) = 5.34 \frac{\text{cal}}{\text{sec}} \tag{5.15a}$$

The natural convection coefficient for the top horizontal surface is obtained from Eq. 5.5 and Table 5.2.

$$h_c = 0.27 \left(\frac{\Delta t}{L}\right)^{0.25}$$

Given $\Delta t = 130 - 80 = 50°\text{F}$

$$L = \frac{2(12)(8)}{12 + 8} = 9.6 \text{ in} = 0.80 \text{ ft}$$

$$h_c = 0.27 \left(\frac{50}{0.80}\right)^{0.25}$$

$$h_c = 0.76 \frac{\text{Btu}}{\text{hr ft}^2 \text{ °F}} = 0.000103 \frac{\text{cal}}{\text{sec cm}^2 \text{ °C}} \tag{5.16}$$

The heat lost from the top surface of the box is determined from Eq. 5.7.

Given $A = \dfrac{(12)(8) \text{ in}^2}{144} = 0.667 \text{ ft}^2 = 619.6 \text{ cm}^2$

SEC et al. v. MRI
SEC Exhibit 1020.129
IPR 2023-00220

In English units:

$$Q_{\text{top}} = (0.76)(0.667)(50) = 25.3\,\frac{\text{Btu}}{\text{hr}} \tag{5.17}$$

In metric units:

$$Q_{\text{top}} = (0.000103)(619.6)(27.7) = 1.77\,\frac{\text{cal}}{\text{sec}} \tag{5.17a}$$

The natural convection coefficient for the bottom horizontal surface is obtained from Eq. 5.6 and Table 5.2. Conversions to metric units are made with Tables 1.3 and 1.10.

$$h_c = 0.13\left(\frac{\Delta t}{L}\right)^{0.25}$$

Given $\Delta t = 130 - 80 = 50°\text{F}$

$$L = \frac{2(12)(8)}{12 + 8} = 9.6\text{ in} = 0.80\text{ ft}$$

$$h_c = 0.13\left(\frac{50}{0.80}\right)^{0.25}$$

$$h_c = 0.36\,\frac{\text{Btu}}{\text{hr ft}^2\,°\text{F}} = 0.0000486\,\frac{\text{cal}}{\text{sec cm}^2\,°\text{C}} \tag{5.18}$$

The heat lost from the bottom surface is determined from Eq. 5.7.

Given $A = \dfrac{(12)(8)\text{ in}^2}{144} = 0.667\text{ ft}^2 = 619.6\text{ cm}^2$

In English units:

$$Q_{\text{bot}} = (0.36)(0.667)(50) = 12.0\,\frac{\text{Btu}}{\text{hr}} \tag{5.19}$$

In metric units:

$$Q_{\text{bot}} = (0.0000486)(619.6)(27.8) = 0.84\,\frac{\text{cal}}{\text{sec}} \tag{5.19a}$$

The total heat lost is the sum of the sides, top, and bottom.

SEC et al. v. MRI
SEC Exhibit 1020.130
IPR 2023-00220

In English units:

$$Q_{\text{total}} = 76.7 + 25.3 + 12.0 = 114.0 \frac{\text{Btu}}{\text{hr}} \tag{5.20}$$

Since 1 watt = 3.413 Btu/hr,

$$Q = 33.4 \text{ watts}$$

In metric units:

$$Q_{\text{total}} = 5.34 + 1.77 + 0.84 = 7.95 \frac{\text{cal}}{\text{sec}} \tag{5.20a}$$

Since 1 watt = 0.239 cal/sec,

$$Q = 33.3 \text{ watts}$$

5.8 FINNED SURFACES FOR NATURAL CONVECTION COOLING

The amount of heat that can be removed from an electronic box that is cooled by natural convection will be substantially increased if the surface area of the box can be substantially increased. One convenient method for increasing the surface area is to add fins with a low thermal resistance. The temperature of the fins will then be nearly equal to the surface temperature of the electronic box. The additional heat transferred to the atmosphere will then be approximately proportional to the increase in the surface area.

Fins will increase the size and weight of the electronic box. This may be a small penalty to pay if the cost is reduced and the reliability is increased by eliminating the need for a cooling fan.

The effectiveness of the finned surface will depend upon the temperature gradient along the fin as it extends from the surface of the electronic box. When the fin has a small temperature gradient, the temperature at the tip of the fin will be nearly equal to the temperature at the base of the fin or the chassis surface, and the fin will have a high efficiency. The natural convection coefficient h_c must be corrected when the fin efficiency is less than 100%. The fin efficiency is shown by Eq. 5.21 [15, 17, 24].

$$\eta = \frac{\tanh md}{md} = \text{fin efficiency} \tag{5.21}$$

SEC et al. v. MRI
SEC Exhibit 1020.131
IPR 2023-00220

where $m = \sqrt{\dfrac{2h_c}{K\delta}}$

h_c = convection coefficient
= Btu/hr ft² °F or cal/sec cm² °C
K = thermal conductivity of fin material
= Btu/hr ft °F or cal/sec cm °C
δ = fin thickness
= ft, in, cm
d = fin height (distance fin extends from surface of box)
= ft, in, cm

Fins should not be spaced too close together on the surface of a box, because this may result in pinching or choking the natural flow of cooling air. Closely spaced fins may increase the flow resistance and reduce the effective cooling available from the fins. When several fins are stacked together, there should be sufficient space to permit two convection films to develop, as shown in Figure 5.8.

The fin efficiency can also be determined from Figure 5.7 if the value of md is known.

If the fins are spaced closer together than about 0.60 in (1.52 cm) in perfectly still air at sea level, some pinching or choking may occur. However, under some natural convection conditions there is often additional air movement generated by the local ventilation system, so that the fins can be spaced closer together. Tests have shown that fins can be spaced about 0.50 in (1.27 cm) apart under these circumstances without choking the natural convection film coefficient. If the environmental conditions are unknown, a minimum clearance of 0.60 in is recommended to avoid trouble.

Fins can be cast integral with an electronic chassis, or they can be riveted, screwed, or cemented to the chassis structure. A low thermal interface

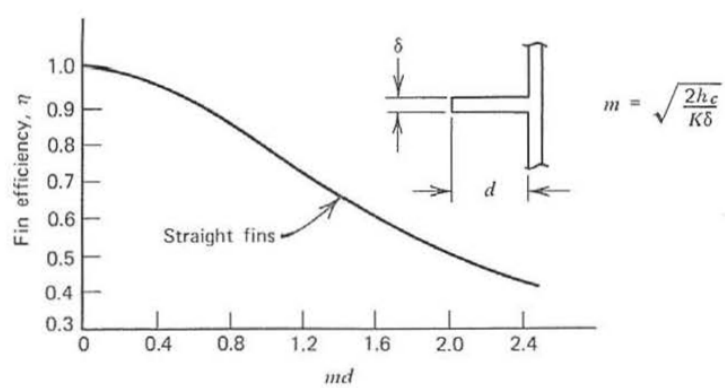

Figure 5.7 Fin efficiency factor for a single fin.

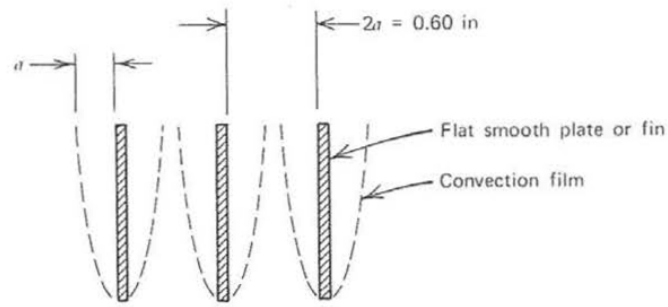

Figure 5.8 Convection film for several fins stacked together.

resistance must be provided between the fins and the chassis to ensure good heat transfer characteristics.

5.9 SAMPLE PROBLEM—COOLING FINS ON AN ELECTRONIC BOX

Determine the amount of heat that can be removed by natural convection from the electronic box in the preceding problem, when cooling fins are added as shown in Figure 5.9.

SOLUTION

The geometry of the electronic box is the same as Figure 5.6; only the vertical fins on the long sides have been added. The spacing between the

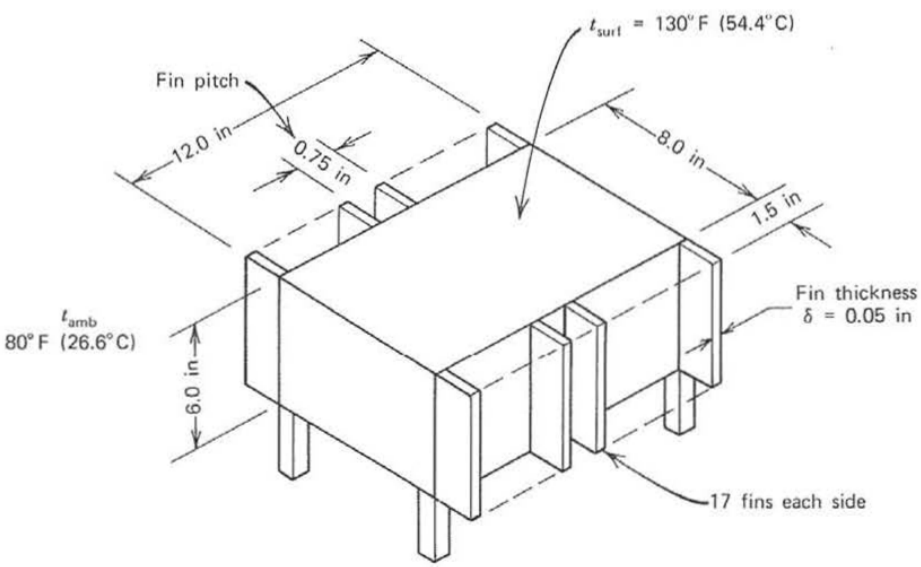

Figure 5.9 Electronic box with fins to improve natural convection cooling.

SEC et al. v. MRI
SEC Exhibit 1020.133
IPR 2023-00220

fin surfaces is 0.75 − 0.05 = 0.70 in (1.78 cm); therefore, no choking or pinching of the natural convection film will occur, even in perfectly still air.

The additional area supplied by the 17 fins on both sides is as follows:

$$A_{\text{fin}} = \frac{2(17)(6)(1.5)(2\text{ sides})}{144\text{ in}^2/\text{ft}^2} = 4.25\text{ ft}^2 = 3948.3\text{ cm}^2 \tag{5.22}$$

The temperature along the fin will not be constant, so that the fin efficiency η must be determined using Eq. 5.21 or Figure 5.7. The convection coefficient for the vertical sides of the box shown by Eq. 5.14 is used because the fins have the same height as the box.

Given $h_c = 0.92$ Btu/hr ft² °F = 0.000124 cal/sec cm² °C (ref. Eq. 5.14)
$K = 83$ Btu/hr ft °F = 0.343 cal/sec cm °C (aluminum fin conductivity)
$\delta = 0.05$ in/12 = 0.00416 ft = 0.127 cm (fin thickness)
$d = 1.5$ in = 0.125 ft = 3.81 cm (fin height)

In English units:

$$m = \sqrt{\frac{2(0.92)}{(83)(0.00416)}} = 2.308\frac{1}{\text{ft}}$$
$$md = (2.308)(0.125) = 0.288\text{ (dimensionless)} \tag{5.23}$$

In metric units:

$$m = \sqrt{\frac{(2)(0.000124)}{(0.343)(0.127)}} = 0.0755\frac{1}{\text{cm}}$$
$$md = (0.0755)(3.81) = 0.288\text{ (dimensionless)} \tag{5.24}$$

Substitute into Eq. 5.21 for fin efficiency.

$$\eta = \frac{\tanh 0.288}{0.288} = \frac{0.280}{0.288} = 97.2\% \tag{5.25}$$

Figure 5.7 could also have been used to obtain a fin efficiency of 97.2%.

The effective fin natural convection coefficient can now be determined with the fin efficiency factor using Eq. (5.14)

$$h_{\text{eff}} = \eta h_c = (0.972)(0.92) = 0.89\frac{\text{Btu}}{\text{hr ft}^2\text{ °F}}\text{ (English units)}$$

$$h_{\text{eff}} = (0.972)(0.000124) = 0.000121\frac{\text{cal}}{\text{sec cm}^2\text{ °C}}\text{ (metric units)}$$

SEC et al. v. MRI
SEC Exhibit 1020.134
IPR 2023-00220

The additional heat lost by the fins only using natural convection is determined from Eq. 5.7.

$$Q = h_{\text{eff}} A \, \Delta t$$

In English units:

$$Q = (0.89)(4.25 \text{ ft}^2)(50°\text{F}) = 189.1 \frac{\text{Btu}}{\text{hr}} \tag{5.26}$$

In metric units:

$$Q = (0.000121)(3948.3 \text{ cm}^2)(27.8°\text{C}) = 13.28 \frac{\text{cal}}{\text{sec}} \tag{5.26a}$$

The total heat loss from the box, in English units, is obtained by adding Eq. 5.20 to Eq. 5.26.

$$Q_{\text{total}} = 114.0 + 189.1 = 303.1 \frac{\text{Btu}}{\text{hr}} = 88.8 \text{ watts} \tag{5.27}$$

The total heat lost from the box, in metric units, is obtained by adding Eq. 5.20a to Eq. 5.26a.

$$Q_{\text{total}} = 7.95 + 13.28 = 21.23 \frac{\text{cal}}{\text{sec}} = 88.8 \text{ watts} \tag{5.27a}$$

The fins thus increase the heat transfer capability of the box from 33.3 watts to 88.8 watts for the same temperature conditions, but with a slight increase in the volume and weight requirements.

5.10 NATURAL CONVECTION ANALOG RESISTOR NETWORKS

Computers are often used to solve heat transfer problems involving natural convection. This usually requires some type of mathematical model to simulate the physical characteristics of the system. Some analog resistor network models are shown in Figures 3.9 through 3.13.

The natural convection resistance is defined by Eq. 5.28.

$$R = \frac{1}{h_c A} \tag{5.28}$$

Natural convection coefficients h_c for heated vertical plates can be determined from Eq. 5.4. Equation 5.5 can be used for heated horizontal

SEC et al. v. MRI
SEC Exhibit 1020.135
IPR 2023-00220

plates facing upward. The area A represents the physical size of the plane surface in consistent units of ft^2 for English units or cm^2 for metric units.

Considering only single surfaces for the plates shown in Figure 5.10, for a temperature rise of 75°F, the thermal resistances would be as follows:

Vertical plate:

$$h_c = 0.29\left(\frac{\Delta t}{L}\right)^{0.25} = 0.29\left(\frac{75}{3/12}\right)^{0.25} = 1.21\,\frac{\text{Btu}}{\text{hr ft}^2\,°\text{F}}$$

$$A = \frac{(3)(6)\,\text{in}^2}{144\,\text{in}^2/\text{ft}^2} = 0.125\,\text{ft}^2$$

$$R_{\text{vert}} = \frac{1}{h_c A} = \frac{1}{(1.21)(0.125)} = 6.61\,\frac{\text{hr °F}}{\text{Btu}} \tag{5.29}$$

Horizontal plate:

$$h_c = 0.27\left(\frac{\Delta t}{L}\right)^{0.25}$$

$$L = \frac{L \times w}{(L + w)/2} = \frac{(3)(6)}{(3 + 6)/2} = 4.0\,\text{in} = 0.333\,\text{ft}$$

$$h_c = 0.27\left(\frac{75}{0.333}\right)^{0.25} = 1.04\,\frac{\text{Btu}}{\text{hr ft}^2\,°\text{F}}$$

$$R_{\text{hor}} = \frac{1}{h_c A} = \frac{1}{(1.04)(0.125)} = 7.69\,\frac{\text{hr °F}}{\text{Btu}} \tag{5.30}$$

When a mathematical model for natural convection of a large vertical plate is being established, the conduction resistance between each node will be required, as well as the convection resistance to the ambient, as shown in Figure 5.11.

The small plate sections a through g are used to compute the conduction

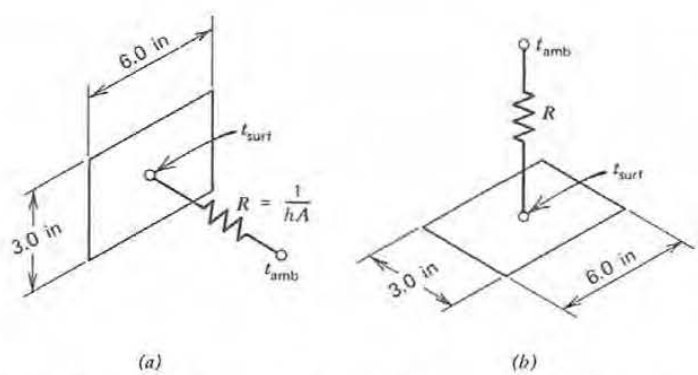

Figure 5.10 Natural convection models for vertical and horizontal plates.

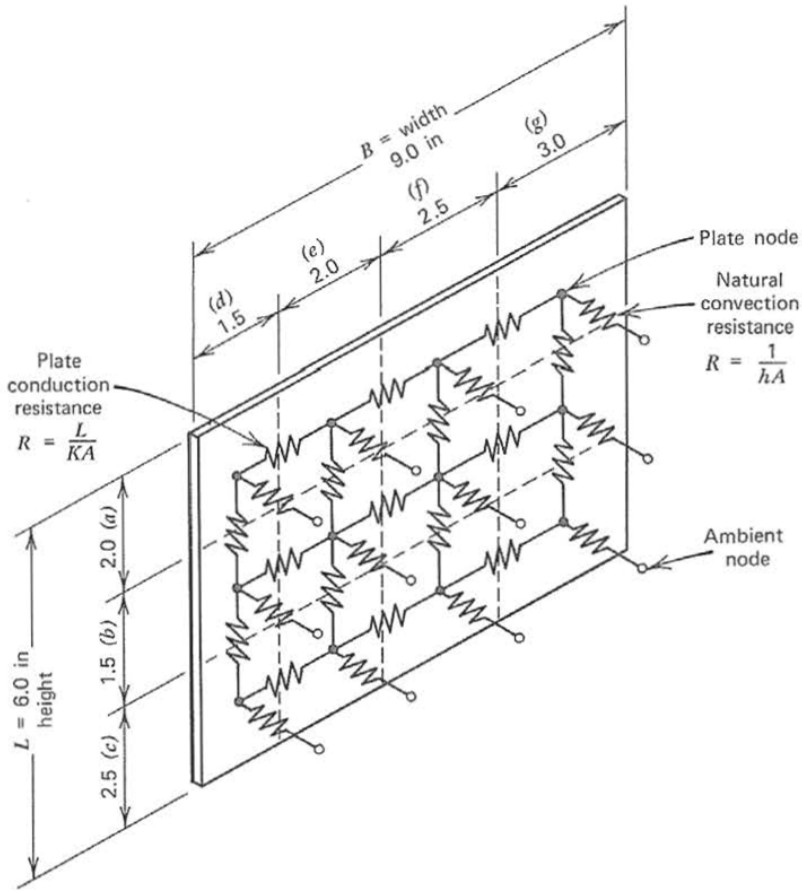

Figure 5.11 Mathematical model of a plate that combines conduction and natural convection thermal resistors.

resistances between each node point on the plate. However, the natural convection coefficient h_c depends upon the full height of the plate. Therefore, the full plate height of 6.0 in must be used for computing the natural convection coefficient, not the individual plate sections of a, b, and c.

5.11 NATURAL CONVECTION COOLING FOR PCBs

Printed circuit boards (PCBs) are often mounted within chassis that are completely open at the top and bottom to allow the free flow of cooling air. These PCBs should be mounted vertically with a minimum space of about 0.75 in (1.90 cm) free flow distance between the components and the adjacent PCB, to prevent pinching or choking of the natural convection flow, as shown in Figure 5.12.

Radiation cooling effects must be ignored here because the PCBs "see" each other. This simply results in a radiation heat interchange with no real

SEC et al. v. MRI
SEC Exhibit 1020.137
IPR 2023-00220

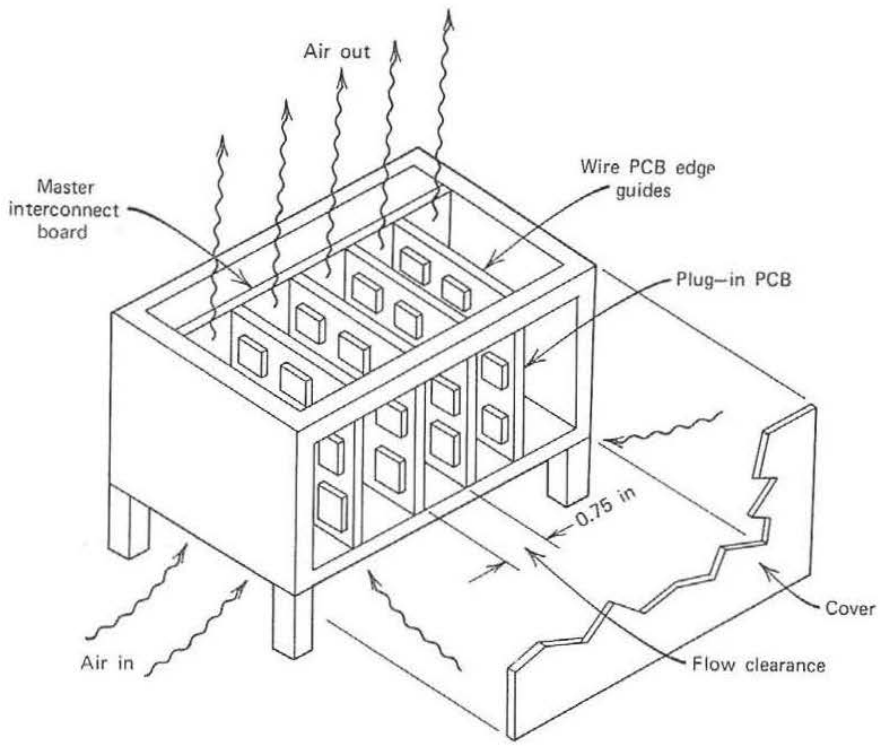

Figure 5.12 Plug-in PCBs cooled by natural convection.

cooling, except perhaps for the PCBs on each end of the chassis. These cooler end slots should be reserved for the highest-power-dissipating PCBs.

In a 160°F (71°C) ambient, a power dissipation of 0.10 watt/in^2 (0.0155 watt/cm^2) will result in a component surface temperature of about 212°F (100°C) for a small PCB.

This considers only one side of the PCB, when electronic components are uniformly distributed with a uniform heat load along the surface of the PCB. When electronic components are mounted on both sides of the PCB with a uniform heat distribution, the total amount of power that can be dissipated from one PCB is double the power that can be dissipated from only one side of the PCB for a 30°C temperature rise. (54°F rise)

The foregoing approximation can be verified by considering a 6 by 9 in PCB, similar to Figure 5.11, with electronic components uniformly distributed on one side. The temperature rise from the component surface to the still ambient is 54°F (30°C). The natural convection coefficient is determined from Eq. 5.4.

$$h_c = 0.29\left(\frac{54}{6/12}\right)^{0.25} = 0.93\,\frac{\text{Btu}}{\text{hr ft}^2\ ^\circ\text{F}}$$

SEC et al. v. MRI
SEC Exhibit 1020.138
IPR 2023-00220

The amount of heat lost by convection from one side of the PCB is determined from Eq. 5.7.

$$Q = 0.93\left(\frac{6 \times 9\ \text{in}^2}{144\ \text{in}^2/\text{ft}^2}\right)(54°\text{F}) = 18.8\ \frac{\text{Btu}}{\text{hr}} = 5.5\ \text{watts}$$

$$\text{power density} = \frac{Q}{A} = \frac{5.5\ \text{watts}}{6 \times 9\ \text{in}^2} = 0.10\ \frac{\text{watt}}{\text{in}^2} \tag{5.31}$$

Equation 5.31 shows that a value of 0.10 watt/in^2 is a good approximation for the allowable power dissipation of a PCB cooled by natural convection.

Electronic components are usually mounted on one side of a PCB with the lead wires passing through the PCB to the opposite side for wave or flow soldering. Some of the heat dissipated within the electronic components will flow through the electrical lead wires to the back side of the PCB, as shown in Figure 1.3. When the back side of the PCB has a large number of copper printed circuit runs, they will act as heat spreaders. The back side of the PCB will then be capable of providing additional surface area for heat removal by natural convection. Thermal tests on PCBs with plated throughholes and flow-soldered electronic components, show that the back side of the PCB can increase the total effective heat transfer area about 30%.

If the electronic components are mounted on one side of the PCB, and lap solder joints are used (the electrical lead wires do not extend through the PCB with lap solder joints), the heat will not flow through to the back side of the PCB as easily. The back side of the PCB will not provide additional surface area for cooling under these circumstances.

5.12 NATURAL CONVECTION COEFFICIENT FOR ENCLOSED AIR SPACE

Printed circuit boards that are to be cooled by natural convection are sometimes placed so close to a wall that the natural flow of cooling air is blocked. The resulting clearance is too small to allow air movement, so that the clearance becomes an enclosed air space. Although natural convection is suppressed, heat transfer may still take place by conduction across the air gap. An equivalent convection coefficient can then be defined, based upon the heat conducted across the air gap as shown by Eq. 3.1.

$$Q = KA\frac{\Delta t}{L} \qquad \text{(ref. Eq. 3.1)}$$

For convection, the general heat transfer relation is shown by Eq. 5.7.

$$Q = h_c A\ \Delta t \qquad \text{(ref. Eq. 5.7)}$$

SEC et al. v. MRI
SEC Exhibit 1020.139
IPR 2023-00220

When the heat transferred is the same in both cases, the equations must be equal so that an air gap convection coefficient h_{AG} can be obtained as shown in Eq. 5.32.

$$h_{AG} A \, \Delta t = KA \frac{\Delta t}{L}$$

$$h_{AG} = \frac{K}{L} \tag{5.32}$$

where K = thermal conductivity of air gap
L = thickness of air gap

The use of Eq. 5.32 can be demonstrated with a sample problem.

5.13 SAMPLE PROBLEM—PCB ADJACENT TO A CHASSIS WALL

An electronic chassis was designed for natural convection cooling, so that a clearance of 0.75 in (1.905 cm) was provided between the PCBs and components. However, a design change required the addition of another PCB, which might reduce the clearance too much unless the new PCB is placed very close to the side wall of the chassis, with a clearance of only 0.20 in (0.51 cm). The PCB measures 6 by 9 in and dissipates 5.5 watts. The electronic chassis must operate at sea level conditions in a maximum ambient temperature of 110°F (43.3°C). The maximum allowable component surface temperature is 212°F (100°C) with the chassis shown in Figure 5.13. The aluminum chassis has a polished finish that has a low emissivity, so that the heat lost by radiation is small. Determine if the design is adequate.

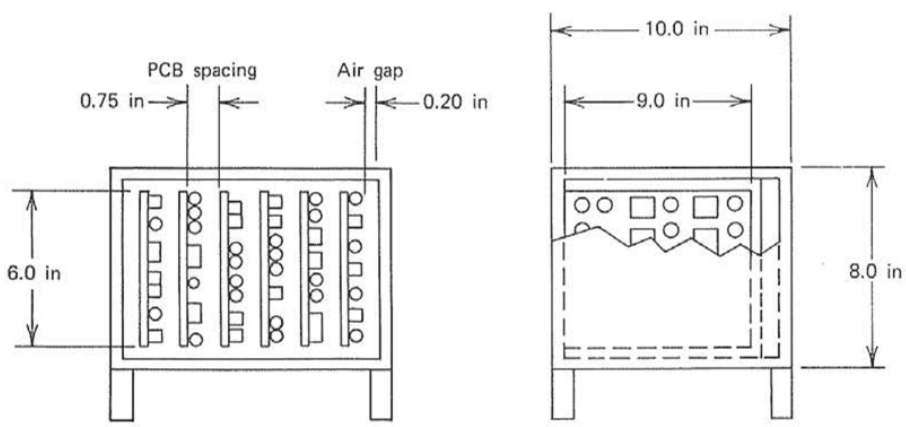

Figure 5.13 PCB spaced close to an end bulkhead.

SEC et al. v. MRI
SEC Exhibit 1020.140
IPR 2023-00220

SOLUTION

The previous sample problem, shown in Figure 5.12, demonstrated that a clearance of 0.75 in will result in a temperature rise of 54°F (30°C) for the conditions given. This will result in a component surface temperature of 164°F, which is satisfactory. Therefore, only the PCB mounted close to the end wall has to be examined.

Heat from the components must flow to the outside ambient. This will require the heat to flow across two major resistance areas, the internal air gap of 0.20 in (R_1) and the external convection film (R_2), as shown in Figure 5.14.

The thermal conductivity of the air in the air gap is unknown, so that an average air temperature of 175°F is assumed and verified later. Determine the resistance with the convection coefficient for the 0.20 in air gap.

$$R_1 = \frac{1}{h_{AG}A} \text{ (ref. Eq. 5.28)}$$

Given $K = 0.017$ Btu/hr ft °F (ref. Figure 6.28)

$$L = \frac{0.20}{12} = 0.0167 \text{ ft (air gap)}$$

$$h_{AG} = \frac{K}{L} = \frac{0.017}{0.0167} = 1.018 \frac{\text{Btu}}{\text{hr ft}^2\,°\text{F}} \text{ (air gap convection)}$$

$$A = \frac{6 \times 9 \text{ in}^2}{144} = 0.375 \text{ ft}^2 \text{ (PCB area)}$$

$$R_1 = \frac{1}{(1.018)(0.375)} = 2.62 \frac{\text{hr °F}}{\text{Btu}} \tag{5.33}$$

The external convection coefficient must be estimated because the tem-

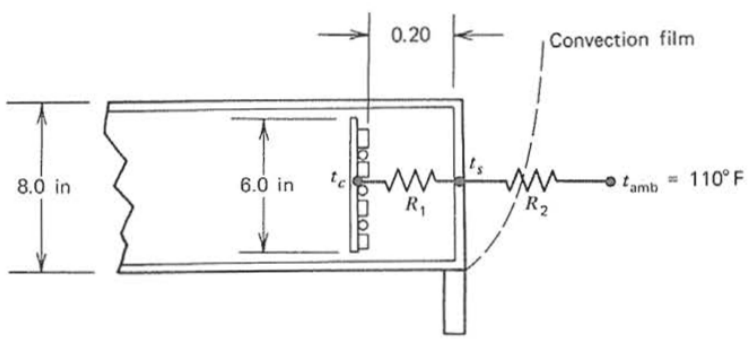

Figure 5.14 Thermal resistances in the heat flow path from PCB components to the outside ambient.

SEC et al. v. MRI
SEC Exhibit 1020.141
IPR 2023-00220

perature rise from the surface of the chassis to the ambient is unknown. In general, natural convection coefficients for this type of structure will range from about 0.6 to about 1.0 Btu/hr ft² °F. A value of 0.8 Btu/hr ft² °F is assumed to start. This can be changed if the analysis shows there is a large error.

$$R_2 = \frac{1}{h_c A} \qquad \text{(ref. Eq. 5.28)}$$

Given $h_c = 0.8$ Btu/hr ft² °F (assumed to start)

$$A = \frac{8 \times 10 \text{ in}^2}{144} = 0.555 \text{ ft}^2$$

$$R_2 = \frac{1}{(0.8)(0.555)} = 2.25 \frac{\text{hr °F}}{\text{Btu}} \tag{5.34}$$

The temperature rise across each thermal resistor is determined from Eq. 5.35. For resistor R_1:

$$\Delta t_1 = QR_1 \tag{5.35}$$

Given $Q = (5.5 \text{ watts})(3.413 \text{ Btu/hr/watt}) = 18.77$ Btu/hr

$R_1 = 2.62$ hr °F/Btu (ref. Eq. 5.33)

$$\Delta t_1 = (18.77)(2.62) = 49.2°\text{F} \tag{5.36}$$

For resistor R_2:

$$\Delta t_2 = QR_2 = (18.77)(2.25) = 42.2°\text{F} \tag{5.37}$$

The natural convection coefficient was assumed to be 0.8 Btu/hr ft² °F. The actual value can now be determined from Eqs. 5.4 and 5.37 using a vertical chassis wall height of 8.0 in.

$$h_c = 0.29\left(\frac{\Delta t}{L}\right)^{0.25} = 0.29\left(\frac{42.2}{8/12}\right)^{0.25} = 0.81 \frac{\text{Btu}}{\text{hr ft}^2\text{ °F}} \tag{5.38}$$

This compares well with the assumed value.

The surface temperature of the component on the end PCB can be determined as follows:

$$t_c = t_{\text{AMB}} + \Delta t_1 + \Delta t_2 \tag{5.39}$$

$$t_c = 110 + 49.2 + 42.2 = 201.4°\text{F } (94.1°\text{C}) \tag{5.40}$$

SEC et al. v. MRI
SEC Exhibit 1020.142
IPR 2023-00220

The average air temperature in the 0.20 in gap between the wall and the component can now be determined. A temperature of 175°F was assumed to obtain the air thermal conductivity.

The average air temperature in the gap is obtained from Eq. 5.40.

$$t_{av} = \frac{t_{comp} + t_{wall}}{2} = \frac{201.4 + (110 + 42.2)}{2} = 176.8°F$$

This compares well with the assumed value.

Therefore, since Eq. 5.40 shows that the component surface temperature is below the maximum allowable value of 212°F (100°C), the design is satisfactory.

If the inside and outside surfaces of the chassis are anodized or painted any color except silver, heat transfer by radiation will be increased and the surface of the PCB will be cooler.

5.14 HIGH ALTITUDE EFFECTS ON NATURAL CONVECTION

All of the previous natural convection equations were determined for sea level conditions, where the atmospheric pressure is 14.7 lb/in^2 (1034.4 g/cm^2). Natural convection depends upon a reduction in the density of the cooling air as it picks up heat, which forces it to rise in a gravity field.

At high altitudes the air density is much lower than it is at sea level conditions, so that the ability of the air to pick up heat is sharply reduced. This, in turn, reduces the ability of the air to rise, which results in a lower convection coefficient.

An examination of Eq. 5.1 shows that the convection coefficient h is related to the air density as $(\rho^2)^m$, where m has a value of 0.25. This means that the convection coefficient is related to the square root of the air density, or $\sqrt{\rho}$. When this is combined with the basic gas law $PV = WRT$, it shows that the air density is directly related to the air pressure when the air temperature does not change. Therefore, the convection coefficient h is also proportional to the square root of the air pressure, as shown in Eq. 5.41.

$$h_{alt} = h_{sl}\sqrt{\frac{\rho_{alt}}{\rho_{sl}}} = h_{sl}\sqrt{\frac{P_{alt}}{P_{sl}}} \tag{5.41}$$

For example, when the natural convection coefficient at sea level is 0.75 Btu/hr ft^2 °F, the natural convection coefficient at an altitude of 30,000 ft can be determined from the atmospheric pressure, which is 4.37 psia, as

SEC et al. v. MRI
SEC Exhibit 1020.143
IPR 2023-00220

shown in Table 6.5. When there is no change in the temperature,

$$h_{alt} = 0.75\sqrt{\frac{4.37}{14.7}} = 0.41\,\frac{\text{Btu}}{\text{hr ft}^2\,°\text{F}} \tag{5.42}$$

When there is a change in the temperature, the air density ratio should be used instead of the pressure ratio, for greater accuracy.

The thermal conductivity of air changes very little with a change in altitude or air pressure, up to an altitude of about 82,000 ft (see Figure 3.19). The thermal conductivity of air does change, however, with the air temperature, as shown in Figure 6.28. Therefore, at high altitudes the natural convection is reduced, but conduction heat transfer across small air gaps is not affected, as long as there is no change in the temperature. These altitude and temperature characteristics can be demonstrated with a sample problem.

5.15 SAMPLE PROBLEM—PCB COOLING AT HIGH ALTITUDES

For the previous sample problem (Section 5.13 and Figure 5.13) determine the component surface temperature that will result at an altitude of 30,000 ft. The aluminum chassis has an iridited finish, which has a low emissivity, so that heat lost by radiation is small and is ignored.

SOLUTION

The external convection coefficient from the outer surface of the box will be reduced at the high altitude. Its exact value is not known. Equation 5.41 might be used with the results from the previous sample problem, shown by Eq. 5.38, to obtain a rough approximation of the convection coefficient at 30,000 ft. However, this would not be accurate, because the outer surface of the box will be hotter at the high altitude condition than at the sea level condition, which will change the convection coefficient. A better approximation of the external convection coefficient at the 30,000 ft altitude condition can be obtained by combining the following equations:

$$h_{sl} = 0.29\left(\frac{\Delta t}{L}\right)^{0.25} \qquad \text{ref. Eq. 5.4)}$$

$$h_{alt} = h_{sl}\sqrt{\frac{P_{alt}}{P_{sl}}} \qquad \text{(ref. Eq. 5.41)}$$

$$h_{alt} = 0.29\left(\frac{\Delta t}{L}\right)^{0.25}\sqrt{\frac{P_{alt}}{P_{sl}}}$$

$$h_{alt} = 0.29\left(\frac{\Delta t}{L}\right)^{0.25}\sqrt{\frac{4.37}{14.7}} = 0.158\left(\frac{\Delta t}{L}\right)^{0.25}$$

SEC et al. v. MRI
SEC Exhibit 1020.144
IPR 2023-00220

Consider another equation:

$$Q = h_{\text{alt}} A \, \Delta t \qquad \text{(at altitude, ref. Eq. 5.7)}$$

or

$$h_{\text{alt}} = \frac{Q}{A \, \Delta t}$$

Equate the convection coefficients h_{alt} and solve for Δt.

$$\frac{Q}{A \, \Delta t} = \frac{0.158 \, \Delta t^{0.25}}{L^{0.25}}$$

$$QL^{0.25} = 0.158 A \, \Delta t^{1.25}$$

$$\Delta t = \left(\frac{QL^{0.25}}{0.158A} \right)^{0.8} \tag{5.43}$$

For a power dissipation of 5.5 watts (18.77 Btu/hr), a vertical height of 8.0 in (0.666 ft) and a surface area of $8 \times 10 = 80$ in^2 (0.555 ft^2), the resulting external temperature rise at an altitude of 30,000 ft becomes

$$\Delta t_2 = \left[\frac{(18.77)(0.666)^{0.25}}{(0.158)(0.555)} \right]^{0.8} = 67.4°\text{F} \tag{5.43a}$$

This compares to a temperature rise of only 42.2°F across the external convection film at sea level conditions, as shown by Eq. 5.37.

The resulting external convection coefficient at the 30,000 ft altitude can be obtained from Eq. 5.7.

$$h_{\text{alt}} = \frac{Q}{A \, \Delta t} = \frac{18.77 \text{ Btu/hr}}{(0.555 \text{ ft}^2)(67.4)}$$

$$h_{\text{alt}} = 0.50 \frac{\text{Btu}}{\text{hr ft}^2 \, °\text{F}}$$

The thermal conductivity of the air in the 0.20 in air gap will increase to about 0.018 Btu/hr ft °F because the average air temperature in the gap will increase to about 200°F. This average air gap temperature can be verified after the preliminary temperature rise calculations. Then, following Eq. 5.32.

$$h_{AG} = \frac{K}{L} = \frac{0.018 \text{ Btu/hr ft °F}}{0.0167 \text{ ft air gap}} = 1.078 \frac{\text{Btu}}{\text{hr ft}^2 \, °\text{F}} \tag{5.44}$$

SEC et al. v. MRI
SEC Exhibit 1020.145
IPR 2023-00220

Substitute into Eq. 5.28, using the area 0.375 ft², as shown in Eq. 5.33.

$$R = \frac{1}{(1.078)(0.375)} = 2.47 \frac{\text{hr °F}}{\text{Btu}}$$

From Eq. 5.35, using a heat value of Q = 5.5 watts = 18.77 Btu/hr, we obtain

$$\Delta t_1 = \left(18.77 \frac{\text{Btu}}{\text{hr}}\right)\left(2.47 \frac{\text{hr °F}}{\text{Btu}}\right) = 46.4\text{°F} \tag{5.45}$$

The component surface temperature at 30,000 ft is determined from Eq. 5.39. The ambient temperature is 110°F.

$$t_c = 110 + 46.4 + 67.4 = 223.8\text{°F (106.5°C)} \tag{5.46}$$

Since this exceeds the maximum allowable component surface temperature of 212°F (100°C), the design is not acceptable. Again, one more check must be made of the average temperature in the air gap to veryify the thermal conductivity used.

$$t_{av} = \frac{t_{comp} + t_{wall}}{2} = \frac{223.8 + (110 + 67.4)}{2} = 200.6\text{°F}$$

This is close to the assumed value of 200°F, so that the results are valid.

5.16 RADIATION COOLING OF ELECTRONICS

Hot bodies emit thermal radiation that is transferred by electromagnetic waves, which can travel through a vacuum or through a gas with relatively little absorption. The true nature of radiation and its transfer mechanism is not completely clear, but it is known that radiation in free space travels at the speed of light.

When radiation waves strike a second body, part of the radiated energy may be absorbed, part may be reflected, and part may be transmitted through the body, as in the case of glass and quartz. The relative amounts of energy transferred in each case depends upon the temperature, the surface characteristics, the body geometry, the material, and the wavelength.

The amount of heat radiated from a surface is related to a factor called the emittance e. This is dependent upon the condition of the surface, such as its temperature, roughness, finish, coating, and if it is a metal, the amount of oxidation. The emittance is a ratio of the amount of radient energy emitted by a body to that emitted by the ideal radiator, which is a black body. The emittance is always less than 1.0 because the perfect black body

SEC et al. v. MRI
SEC Exhibit 1020.146
IPR 2023-00220

does not really exist in nature. The black body is used as a standard for comparison with the radiation characteristics of other bodies.

A perfect black body is one that absorbs 100% of all the energy it receives, without reflecting any energy. The emissive power of a black body depends only upon its temperature. The black body radiates the maximum amount of energy at any wavelength, as shown in Figure 5.15.

The ability of a body to absorb part of the total radiated energy it receives is called the absorptivity α. Again, the amount of energy that the body receives is dependent upon the material and the temperature (or wavelength) of the emitter.

When a body is at thermal equilibrium, the emissivity and the absorptivity of that body will be equal. When this condition exists for the ideal radiator or black body, the emissivity and the absorptivity both equal unity.

The total area under any one of the indicated temperature curves in Figure 5.15 is used to determine the total energy radiated by the black body at that temperature.

Metals and plastics normally used in electronics are very opaque to radiation. Therefore, radiation can be considered as a surface phenomenon, where the effective surface depth for metals is only about 0.0001 in (0.000254 cm) and for nonmetals about 0.02 in (0.0508 cm).

The emissivities of clean metallic materials are generally very low while the emissivities of nonmetallic materials are much higher. Also, nonmetallic materials, in contrast to metals, show decreasing emissivities with an increase in temperature.

A spacecraft in close orbit around the earth or around the moon can receive radiation from the sun and the earth (or moon) at the same time. Most of the radiation is in the ultraviolet and visible light frequency range,

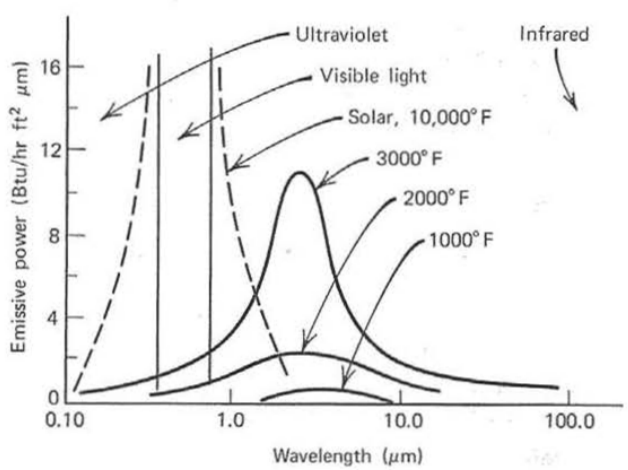

Figure 5.15 Change of emissive power with relation to the temperature of an ideal radiator or black body.

SEC et al. v. MRI
SEC Exhibit 1020.147
IPR 2023-00220

which has a wavelength up to about 1 micrometer (μm), as shown in Figure 5.15 [4, 5, 15].

In general, dull dark surfaces are good absorbers and good emitters of heat, so they have high emittance values. Polished metal surfaces have very low emissivities. However, as metals oxidize, their emissivities increase rapidly. Sandblasted metal surfaces also show emissivities that are much higher than those for polished surfaces.

That emissivity is a surface phenomenon can be demonstrated by placing a thin coat of paint on a highly polished metal surface. Before painting a polished copper surface, the emissivity will be about 0.03. However, with just a thin coat of lacquer, 0.0005 in (0.00127 cm) thick, the emissivity of the same surface will increase sharply to about 0.80.

For temperatures normally encountered in electronic equipment, the radiation wavelength is relatively long, about 7 μm, and is not perceived by the human eye. This represents the infrared region, where color is relatively unimportant, so that black paints have radiation characteristics that are very similar to white paints. In this region a good emitter is a good receiver of radient energy. Dark colors will not emit or absorb any more heat than

Table 5.3 Typical Emissivities 100°C [7, 8]

Material	Emissivity, e
Aluminum	
Polished	0.06
Commercial sheet	0.09
Rough polish	0.07
Iridited	0.10
Gold, highly polished	0.018–0.035
Steel, polished	0.06
Iron, polished	0.14–0.38
Cast iron, machine cut	0.44
Brass, polished	0.06
Copper, polished	0.023–0.052
Polished steel casting	0.52–0.56
Glass, smooth	0.85–0.95
Aluminum oxide	0.33
Anodized aluminum	0.81
White enamel on rough iron	0.9
Black shiny lacquer on iron	0.8
Black or white lacquer	0.80–0.95
Aluminum paint and lacquer	0.52
Rubber, hard or soft	0.86–0.94
Water (32–212°F)	0.95–0.96

SEC et al. v. MRI
SEC Exhibit 1020.148
IPR 2023-00220

light colors in the infrared region, because the emissivities and absorptivities are not related to the paint color.

Sometimes a surface will have characteristics similar to a black body, as shown in Figure 5.15. The shape or its emissive power, as a function of the temperature, will then be the same as the black body, except that the height is reduced by the numerical value of the emissivity. This type of surface is defined as being gray. In most electronic heat transfer calculations, the surfaces are assumed to be gray even though they do not meet the exact requirements for a gray surface.

As the temperature of a body increases, the radiation wavelength decreases until the visible spectrum is reached at about 0.7 μm. In the visible light spectrum, the amount of radiation energy absorbed by a body is sharply affected by the color. Dark colors in the visible spectrum absorb more radient energy than light colors. This can be dramatically shown by placing your hand on a black automobile roof and a white automobile roof at the same time, after both cars have been sitting in the hot sun for several hours. The black roof will be substantially hotter than the white roof.

Heat from both the black and white automobile surfaces will be radiated back to the surrounding areas in the long wavelength, or infrared region, where these paints act like gray surfaces.

Typical emissivity values for various materials are shown in Table 5.3.

Values of α/e for several different materials are shown in Table 5.4.

Relations for the emissivities for two different surfaces are shown in Table 5.5.

Radiation really involves an exchange of energy, since part of the energy received is always reflected back. For normal engineering purposes, the reflected energy is taken care of by the emissivity and the absorptivity of each body involved in the exchange.

The general radiation equation for the exchange of radiant heat energy between two non-black bodies is shown in Eq. 5.47 [7, 8, 15, 17, 24].

$$Q = \sigma f e A \, (T_1^4 - T_2^4) \tag{5.47}$$

Consistent sets of units must be used as defined for English units and metric units in Table 5.6.

The heat transmitted by radiation is directly related to the surface area A. If the surface is irregular, the projected area should be used. This is the area that would result when a tightly stretched string is held over various parts of the surface, as shown in Figure 5.16.

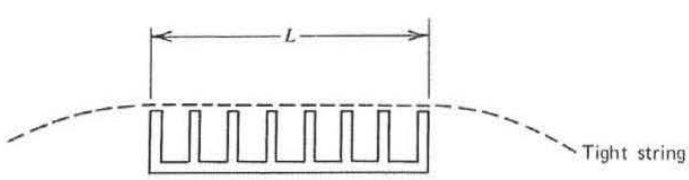

Figure 5.16 Projected area of an irregular surface.

SEC et al. v. MRI
SEC Exhibit 1020.149
IPR 2023-00220

Table 5.4 Some Representative Values of α/e

Material	Solar Absorptivity (α)	Total Normal Emissivity at 100°F (e)	α/e
Aluminum, freshly evaporated	0.10	0.025	4
Gold	0.16	0.02	8
Molybdenum	0.43	0.03	14
Palladium	0.41	0.03	14
Platinum	0.33	0.03	11
Rhodium	0.28	0.02	14
Silver	0.07	0.01	7
Tantalum	0.59	0.02	29
Aluminum, vapor deposit on 0.5 mil Mylar			
Aluminum side	0.13	0.04	3.25
Mylar side	0.18	0.90	0.20
White paint, 1 mil thick	0.15	0.94	0.16
Black paint, 1 mil thick	0.97	0.94	1.03
Clear varnish on aluminum 1 mil	0.20	0.80	0.25
Clear varnish on aluminum 0.05 mil coat	0.20	0.10	2.0
Black lacquer, 0.24 mil coat	0.96	0.48	2.0

Table 5.5 Emissivity Factors for Different Configurations

Configuration	e
Infinite parallel planes	$\dfrac{1}{1/e_1 + 1/e_2 - 1}$
One surface (1) completely surrounded by another (2)	$\dfrac{1}{1/e_1 + A_1/A_2\,[1/e_2 - 1]}$
Completely enclosed body 1, small compared with enclosing body 2	e_1
General case for two surfaces	$e_1 \times e_2$

SEC et al. v. MRI
SEC Exhibit 1020.150
IPR 2023-00220