UNITED STATES PATENT AND TRADEMARK OFFICE

BEFORE THE PATENT TRIAL AND APPEAL BOARD

SAMSUNG ELECTRONICS CO., LTD. AND SAMSUNG ELECTRONICS AMERICA, INC.
Petitioners,

v.

MANUFACTURING RESOURCES INTERNATIONAL, INC.
Patent Owner

U.S. Patent No. 9,173,322

Title: CONSTRICTED CONVECTION COOLING SYSTEM FOR AN ELECTRONIC DISPLAY

Inter Partes Review No. IPR2023-00220

PETITIONERS' CORRECTED PETITION FOR INTER PARTES REVIEW OF U.S. PATENT NO. 9,173,322

Mail Stop PATENT BOARD
Patent Trial and Appeal Board
United States Patent and Trademark Office
P.O. Box 1450
Alexandria, VA 22313-1450

TABLE OF CONTENTS

I. MANDATORY NOTICES 2

- **A.** Real Parties-in-Interest (37 C.F.R. § 42.8(b)(1)) 2
- **B.** Related Matters (37 C.F.R. § 42.8(b)(2)) 2
- **C.** Lead And Back-Up Counsel (37 C.F.R. § 42.8(b)(3)) 3
- **D.** Service Information (37 C.F.R. § 42.8(b)(4)) 4

II. FEE PAYMENT 4

III. REQUIREMENTS UNDER 37 C.F.R. §§ 42.104 4

- **A.** Grounds for Standing 4
- **B.** Identification of Challenge and Statement of Relief Requested 4
- **C.** Considerations under 35 U.S.C. §325(d) 5
- **D.** Considerations under 35 U.S.C. § 314(a) 6

IV. CERTIFICATION OF GROUNDS FOR STANDING 7

V. OVERVIEW OF THE ’322 PATENT 7

- **A.** Level of Ordinary Skill in the Art 7
- **B.** The ’322 Patent 8
- **C.** Prosecution History 10

VI. CLAIM CONSTRUCTION 11

- **A.** “Between” 11
- **B.** “Substantially Parallel” 11
- **C.** “A Fan [Placed/Positioned] to Draw [Ambient] Air Between the Constricted Convection Plate and the [Rear Posterior/Posterior Surface]” 11
- **D.** “A Means for Forcing Air Between the Constricted Convection Plate and the Posterior Surface of the Electronic Display” 12

VII. OVERVIEW OF THE PRIOR ART 13

- **A.** Kim 13
- **B.** Hong 16
- **C.** Tachikawa 17
- **D.** Takahashi 19

E. Na 21

F. Kimura 23

G. Kochiyama 24

H. Cho 26

VIII. GROUND 1 – CLAIMS 4 AND 7 ARE OBVIOUS OVER KIM IN VIEW OF HONG 27

A. Independent Claim 4 27

B. Claim 7 37

IX. GROUND 2: CLAIM 5 IS OBVIOUS OVER KIM, HONG, AND TACHIKAWA 39

A. Claim 5 39

B. Motivation to Combine Kim, Hong and Tachikawa 42

X. GROUND 3: CLAIM 8 IS OBVIOUS OVER KIM, HONG AND TAKAHASHI 43

A. Claim 8 43

B. Motivation to Combine Kim and Hong with Takahashi 46

XI. GROUND 4: CLAIMS 1, 2, AND 3 ARE OBVIOUS OVER KIM AND TACHIKAWA 48

A. Independent Claim 1 48

B. Claim 2 50

C. Claim 3 50

XII. GROUND 5: NA RENDERS OBVIOUS CLAIMS 4, 8, 9, 10 AND 16 50

A. Independent Claim 4 50

B. Claim 8 58

C. Independent Claim 9 60

D. Claim 10 64

E. Claim 16 64

XIII. GROUND 6: NA IN VIEW OF KIM RENDERS OBVIOUS CLAIMS 7, 12 AND 13 65

A. Claim 7 65

B. Claim 12 67

C. Claim 13 67

XIV. GROUND 7: NA IN VIEW OF TACHIKAWA RENDERS CLAIM 11 OBVIOUS 69

A. Claim 11 69

B. Motivation to Combine Na and Tachikawa 70

XV. GROUND 8: KIMURA RENDERS CLAIMS 9, 12, 13, AND 16 OBVIOUS 71

A. Independent Claim 9 71

B. Claim 12 77

C. Claim 13 78

D. Claim 16 80

XVI. GROUND 9: KIMURA IN VIEW OF KOCHIYAMA RENDERS CLAIMS 1, 2, 3 AND 11 OBVIOUS 81

A. Independent Claim 1 81

B. Claim 2 85

C. Claim 3 86

D. Claim 11 86

XVII. GROUND 10: CLAIMS 4 AND 7 ARE OBVIOUS OVER KIMURA IN VIEW OF HONG 87

A. Independent Claim 4 87

B. Claim 7 89

XVIII. GROUND 11: CLAIM 5 IS OBVIOUS KIMURA IN VIEW OF HONG AND KOCHIYAMA 90

A. Claim 5 90

XIX. GROUND 12: CHO RENDERS CLAIMS 4, 5, 9, 10 AND 11 OBVIOUS 90

A. Independent Claim 4 90

B. Claim 5 97

C. Independent Claim 9 98

D. Claim 10 103

E. Claim 11 104
XX. SECONDARY CONSIDERATIONS 105
XXI. CONCLUSION 105
XXII. CLAIM APPENDIX OF THE CHALLENGED CLAIMS 107

TABLE OF AUTHORITIES

Page(s)

Cases

Apple Inc. v. Fintiv, Inc.,
IPR2020-00019, Paper 11 6

In re Certain Outdoor and Semi-Outdoor Electronic Displays, Products Containing Same, and Components Thereof,
Investigation No. 337-TA-1331 2

Micro Chem., Inc. v. Great Plains Chem. Co., Inc.,
194 F.3d 1250 (Fed. Cir. 1999) 12

Samsung Electronics Co. Ltd. and Samsung Electronics America, Inc. v. Manufacturing Resources International, Inc.,
Case No. IPR2023-00199 (PTAB Nov. 22, 2022) 2

Texas Digital Sys., Inc. v. Telegenix, Inc.,
308 F.3d 1193 (Fed. Cir. 2002) 12

Williamson v. Citrix Online, LLC,
792 F.3d 1339 12

Statutes

35 U.S.C. § 102 ..... *passim*

35 U.S.C. § 112(6) 12

35 U.S.C. § 314 6

35 U.S.C. §325 5

LIST OF EXHIBITS

Exhibit No.	Description of Document
1001	U.S. Patent No. 9,173,322 (the "'322 patent")
1002	Declaration of Robert Smith-Gillespie
1003	Curriculum Vitae of Robert Smith-Gillespie
1004	U.S. Patent Application Publication No. 2006/0199514 to Kimura ("Kimura")
1005	U.S. Patent No. 7,800,706 B2 to Kim, et al. ("Kim")
1006	U.S. Patent Application Publication No. 2006/0132699 to Cho, et al. ("Cho")
1007	Japanese Unexamined Patent Application Publication No. H11-68363 to Takahashi ("Takahashi")
1008	Certified Translation of Japanese Unexamined Patent Application Publication No. H11-68363 to Takahashi ("Takahashi")
1009	Korean Published Unexamined Patent Application No. 10-2006-0016469 to Na ("Na")
1010	Certified Translation of Korean Published Unexamined Patent Application No. 10-2006-0016469 to Na ("Na")
1011	Claim Construction Order (D.I. 153) dated October 3, 2018 in *Manufacturing Resources Int'l, Inc. v. Civiq Smartscapes, LLC, et al.*, Civil Action No. 17-269-RGA (D. Del.)

Exhibit No.	Description of Document
1012	Memorandum Opinion (D.I. 150) dated September 27, 2018 in *Manufacturing Resources Int'l, Inc. v. Civiq Smartscapes, LLC, et al.*, Civil Action No. 17-269-RGA (D. Del.)
1013	U.S. Patent No. 6,825,828 B2 to Burke, et al. ("Burke")
1014	E. Fred Schubert & Jong Kyu Kim, *Solid-State Light Sources Getting Smart*, 308 *Science* 1274 (2005) ("Schubert")
1015	U.S. Patent Application Publication No. 2004/0223299 to Ghosh ("Ghosh")
1016	Military Handbook: Reliability Prediction of Electronic Equipment, DEPARTMENT OF DEFENSE, MIL-HDBK-217F (1991) ("MIL-HDBK-217F")
1017	Allan Webber, *Calculating Useful Lifetimes of Embedded Processors,* TEXAS INSTRUMENTS INCORPORATED, SPRABX4 (Nov. 2014) ("Webber")
1018	LIAN-TUU YEH & RICHARD C. CHU, THERMAL MANAGEMENT OF MICROELECTRONIC EQUIPMENT: HEAT TRANSFER THEORY, ANALYSIS METHODS, AND DESIGN PRACTICES (Dereje Agonafer ed., 2002) ("Yeh & Chu")
1019	ALLAN W. SCOTT, COOLING OF ELECTRONIC EQUIPMENT (John Wiley & Sons, 1974) ("Scott")
1020	DAVE S. STEINBERG, COOLING TECHNIQUES FOR ELECTRONIC EQUIPMENT (John Wiley & Sons, 1980) ("Steinberg")
1021	U.S. Patent No. 5,748,269 to Harris, et al. ("Harris")

Exhibit No.	Description of Document
1022	U.S. Patent Application Publication No. 2002/0122134 to Kalua ("Kalua")
1023	Custom Luxeon Design Guide, LUMILEDS FUTURE ELECTRONICS, Application Brief AB12 (Nov. 2004) ("Lumileds AB12")
1024	Thermal Design Using: Luxeon Power Light Sources, PHILLIPS LUMILEDS LIGHTING COMPANY, Application Brief AB05 (June 2006) ("Lumileds AB05")
1025	Japanese Patent No. 2006-330196 to Tachikawa ("Tachikawa")
1026	Certified Translation of Japanese Patent No. 2006-330196 to Tachikawa ("Tachikawa")
1027	Japanese Unexamined Patent Application Publication No. 10-2003-162228 to Kochiyama ("Kochiyama")
1028	Certified Translation of Japanese Unexamined Patent Application Publication No. 10-2003-162228 to Kochiyama ("Kochiyama")
1029	United States Patent Application Publication No. 2007/0171353 to Hong ("Hong")
1030	PEM BULLETIN, PennEngineering (1997) ("PEM")
1031	MERRIAM-WEBSTER'S COLLEGIATE DICTIONARY (11th ed. 2007) ("Webster")
1032	THE OXFORD ENGLISH DICTIONARY (J. A. Simpson & E. S. C. Weiner eds., 2d ed. 1989) ("Oxford")
1033	RANDOM HOUSE WEBSTER'S COLLEGIATE DICTIONARY (2d ed. 2000) ("Random House")

Exhibit No.	Description of Document
1034	File History for U.S. Application No. 14/508,621
1035	U.S. Patent No. 8,854,595, to Dunn ("the '595 patent")
1036	U.S. Patent Application Publication No. 2008/0218446 to Yamanaka ("Yamanaka")
1037	U.S. Patent No. 7,753,567 to Kang, et al. "(Kang")
1038	U.S. Patent Application Publication No. 2009/0154096 to Iyengar, et al. ("Iyengar")
1039	Redline of Corrected Petition

Petitioners Samsung Electronics Co., Ltd. and Samsung Electronics America, Inc. ("Samsung" or "Petitioners") seek *inter partes* review and cancellation of claims 1-5, 7-13, and 16 of U.S. Patent 9,173,322 ("the '322 patent") (Ex. 1001).[1] Petitioners' request is supported by the Expert Declaration of Robert Smith-Gillespie (Ex. 1002), and other exhibits submitted herewith.

This Petition and supporting exhibits demonstrate that there is a reasonable likelihood that claims 1-5, 7-13, and 16 of the '322 patent are unpatentable because each claim would have been obvious to a person of ordinary skill in the art ("POSITA") in light of the prior art references discussed herein. Accordingly, Petitioners request that the Board institute an *inter partes* review.

[1] For purposes of this Petition, citations to patents and patent applications, including the '322 patent, are in the form a:bb – c:dd, where "a" and "c" are column numbers, and "bb" and "dd" are line numbers.

I. MANDATORY NOTICES

A. Real Parties-in-Interest (37 C.F.R. § 42.8(b)(1))

The real parties-in-interest are Samsung Electronics Co. Ltd., Samsung Electronics America, Inc., Samsung SDS Co., Ltd., Samsung SDS America, Inc., Coates Signco Pty Limited, Coates US Inc., and Industrial Enclosure Corporation d/b/a Palmer Digital Group.

B. Related Matters (37 C.F.R. § 42.8(b)(2))

The ’322 patent is at issue in *Manufacturing Resources, Inc. v. Samsung Electronics Co., Ltd., et al.*, Case No. 2:22-cv-00320, pending in the district court for the Eastern District of Texas (“the District Court Action”), and in *In re Certain Outdoor and Semi-Outdoor Electronic Displays, Products Containing Same, and Components Thereof*, Investigation No. 337-TA-1331, pending before the International Trade Commission (“the ITC Action”).

In both the District Court Action and the ITC Action, the Patent Owner also alleged infringement of U.S. Patent No. 8,854,595 (“the ’595 patent”) by Petitioners. On November 22, 2022, Petitioners filed a petition for *inter partes* review of the ’595 patent. (*Samsung Electronics Co. Ltd. and Samsung Electronics America, Inc. v. Manufacturing Resources International, Inc.*, Case No. IPR2023-00199 (PTAB Nov. 22, 2022).) The ’322 patent is a continuation of the ’595 patent.

The ’322 patent also was asserted by the Patent Owner against Civiq Smartscapes, LLC, Civiq Holdings, LLC, Comark, LLC, and Comark Holdings,

LLC in *Manufacturing Resources Int'l, Inc. v. Civiq Smartscapes, LLC, et al.*, Civil Action No. 17-269-RGA (D. Del.) ("the MRI-Civiq Litigation"). Those proceedings were voluntarily dismissed with prejudice by the parties on January 24, 2020.

C. Lead And Back-Up Counsel (37 C.F.R. § 42.8(b)(3))

Petitioners provide the following designation of counsel.

LEAD COUNSEL	BACK-UP COUNSEL
Sanjeet Dutta Registration No. 46,145 Goodwin Procter LLP 601 Marshall Street Redwood City, CA 94063 sdutta@goodwinlaw.com Tel: (650) 752-3100 Fax: (650) 853-1038	Douglas J. Kline Reg. No. 35,574 Goodwin Procter LLP 100 Northern Avenue Boston, MA 02210 dkline@goodwinlaw.com Tel: (617) 570-1000 Fax: (617) 523-1231
	Srikanth Reddy Pro hac vice application to be filed sreddy@goodwinlaw.com Goodwin Procter LLP 100 Northern Avenue Boston, MA 02210 Tel: (617) 570 1000 Fax: (617) 523-1231
	Naomi L. Birbach Registration No. 67,113 Goodwin Procter LLP 620 Eighth Avenue New York, NY 10018 nbirbach@goodwinlaw.com Tel. 212-813-8800 Fax 212-355-3333

D. Service Information (37 C.F.R. § 42.8(b)(4))

This Corrected Petition is being served by email on lead and back-up counsel designated in Patent Owner's Power of Attorney, Paper 6, and by Federal Express Next Business Day Delivery to the attorney of record for the '322 patent, Standley Law Group. Please direct all correspondence to counsel at the contact information above.

II. Fee Payment

Petitioners authorize the U.S. Patent & Trademark Office to charge Deposit Account No. 506989 for the fee set in 37 C.F.R. § 42.15(a) for this Petition and further authorizes any additional fees to be charged to this Deposit Account.

III. Requirements Under 37 C.F.R. §§ 42.104

A. Grounds for Standing

Petitioners certify that the '322 patent is available for IPR and that Petitioners are not barred or otherwise estopped.

B. Identification of Challenge and Statement of Relief Requested

Petitioners request institution of IPR based on the following grounds:

Ground	Claims	Basis for Challenge
1	4, 7	Obviousness over Kim (Ex. 1005) in view of Hong (Ex. 1029)
2	5	Obviousness over Kim (Ex. 1005) in view of Hong (Ex. 1029) and Tachikawa (Ex. 1026)

3	8	Obviousness over Kim (Ex. 1005) in view of Hong (Ex. 1029) and Takahashi (Ex. 1008)
4	1, 2, 3	Obviousness over Kim (Ex. 1005) in view of Tachikawa (Ex. 1026)
5	4, 8, 9, 10, 16	Obviousness over Na (Ex. 1010)
6	7, 12, 13	Obviousness over Na (Ex. 1010) in view of Kim (Ex. 1005)
7	11	Obviousness over Na (Ex. 1010) in view of Tachikawa (Ex. 1026)
8	9, 12, 13, 16	Obviousness over Kimura (Ex. 1004)
9	1, 2, 3, 11	Obviousness over Kimura (Ex. 1004) in view of Kochiyama (Ex. 1028)
10	4, 7	Obviousness over Kimura (Ex. 1004) in view of Hong (Ex. 1029)
11	5	Obviousness over Kimura (Ex. 1004) in view of Hong (Ex. 1029) and Kochiyama (Ex. 1028)
12	4, 5, 9, 10, 11	Obviousness over Cho (Ex. 1006)

Submitted with this Petition is the Declaration of Robert Smith-Gillespie, a qualified technical expert. (Exs. 1002, ¶¶6-18; 1003.)

C. Considerations under 35 U.S.C. §325(d)

According to the framework set forth in *Advanced Bionics, LLC v. MED-EL Elektronmedizinische Geräte GmbH,* the Board considers "(1) whether the same or substantially the same art previously was presented to the Office or whether the same

or substantially the same arguments previously were presented to the Office; and (2) if either condition of first part of the framework is satisfied, whether the petitioner has demonstrated that the Office erred in a manner material to the patentability of challenged claims." IPR2019-01469, Paper 6, p.8 (PTAB Feb. 13, 2020) (precedential). None of the prior art references used herein were cited by the examiner during prosecution of the application which issued as the '322 patent. Although Cho (Ex. 1006), which is only relied upon for Ground 12, was cited on an Information Disclosure Sheet, it was not cited by the examiner in any rejections of record. (Ex. 1034, pp.79, 98.) Because the art was not meaningfully considered by the examiner and is materially different from the art that the examiner did consider, the Board need not reach part 2 of the *Advanced Bionics* framework.

Even if the Board were to reach part 2, the arguments made herein demonstrate the materiality of the examiner's error in failing to consider Cho because Cho discloses or renders obvious each limitation of claims 4, 5, 9, 10, and 11. (*See infra*, § XIX; Ex. 1002, ¶¶349-411.)

D. Considerations under 35 U.S.C. § 314(a)

Under the *Fintiv* factors, the PTAB may consider parallel district court litigation in determining whether to institute under 35 U.S.C. § 314(a). *Apple Inc. v. Fintiv, Inc.*, IPR2020-00019, Paper 11, pp.2-3, 6 (PTAB Mar. 20, 2020) (precedential). However, "[t]he PTAB will not discretionarily deny petitions based

on applying *Fintiv* to a parallel ITC proceeding." Memorandum, Interim Procedure for Discretionary Denials in AIA Post-Grant Proceedings with Parallel District Court Litigation, p.7 (Jun. 21, 2022) ("Interim Procedure"). Because the parallel district court litigation is stayed pending the outcome of the ITC proceeding, the *Fintiv* factors are not applicable here.

IV. CERTIFICATION OF GROUNDS FOR STANDING

Petitioners certify pursuant to 37 C.F.R. § 42.104(a) that the '322 patent for which review is sought is available for *inter partes* review and that Petitioners are not barred or estopped from requesting an *inter partes* review challenging the patent claims on the grounds identified in this petition.

V. OVERVIEW OF THE '322 PATENT

A. Level of Ordinary Skill in the Art

A person of ordinary skill in the art (POSITA) as of March 3, 2008 would have possessed a bachelor's degree in a pertinent discipline, such as mechanical engineering, physics, product design, or a related field. (Ex. 1002, ¶38.) Such a person would also have 2–4 years of experience in working with electronic displays and have an understanding of product design issues and failure modes associated with electronic displays. (*Id.*) Alternatively, a POSITA would have had 5–7 years of experience in the field working with electronic displays and have a similar understanding of product design issues and failure modes associated with electronic displays. (*Id.*)

B. The ’322 Patent

The ’322 patent (Ex. 1001) issued on October 27, 2015, from Application No. 14/508,621 (“the ’621 application”) filed on October 7, 2014. (*See* Ex. 1034.) The ’621 application was a Continuation of Application No. 12/411,925, which matured into U.S. Patent No. 8,854,595 (Ex. 1035), which itself was a Continuation-in-Part of each of the following applications Nos.: (a) 12/234/307, filed September 19, 2008; (b) 12/234,360, filed September 19, 2008; (c) 12/237,365, filed September 24, 2008; and (d) 12/235,200, filed September 22, 2008. The ’322 patent also claims priority to ten provisional applications, the earliest of which (No. 61/033,064) was filed on March 3, 2008. (*See* Ex. 1001, 1:7-42). For purposes of this petition only, Petitioners assume that the ’322 patent is entitled to a claim of priority of March 3, 2008.

The ’322 patent relates to cooling of electronic displays, including LCD displays using fans to “propel or pull air” between a “constricted convection plate” and the rear surfaces of the electronic displays. (*Id.*, Abstract, 5:50-54.) Figures 5B and 5C are exemplary embodiments of the alleged invention set forth in the challenged claims and includes display (**10**) and fan (**52**). (*Id.*, 6:1-13.)

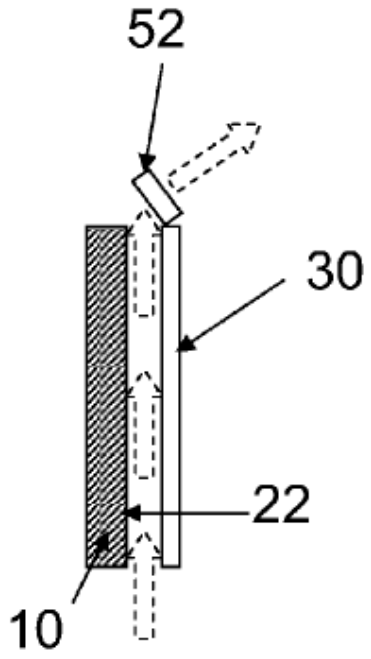

Fig. 5B

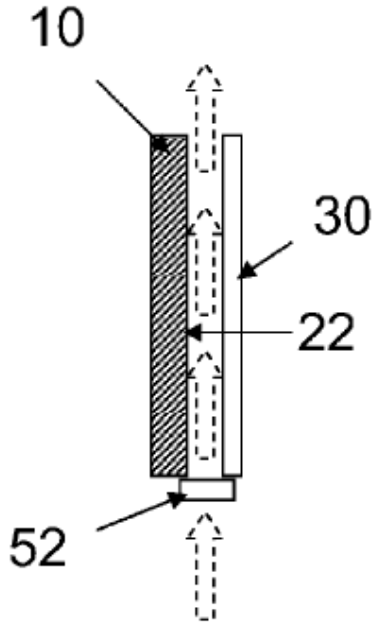

Fig. 5C

In Figures 5B and 5C, fan (**52**) "draw[s] ambient air" and "force[s] ambient air," respectively, between posterior display surface (**22**) and constricted convection plate (**30**). (*Id.*)

The LCD display has a backlight assembly which may include "a printed circuit board (PCB) with a plurality of LEDs mounted" to the front surface of the PCB. (*Id.*, 4:52-55.) Heat generated by LEDs and other electronic components must be dispersed to prevent overheating and malfunction. (*Id.*, 3:5-8.) The patent acknowledges "conductive and convective heat transfer systems for electronic displays [were] known," including systems that "have relied primarily on fans for moving air past the components to be cooled and out of the display." (*Id.*, 1:52-58.)

The ’322 patent discusses a few other features, some optional, which can be used along with the “constricted convection plate” such as an exterior housing, access apertures, and brackets. (*Id.*, 2:45–46, 4:39-51, 5:22-33.) Figure 4 is an exemplary embodiment access apertures **34**:

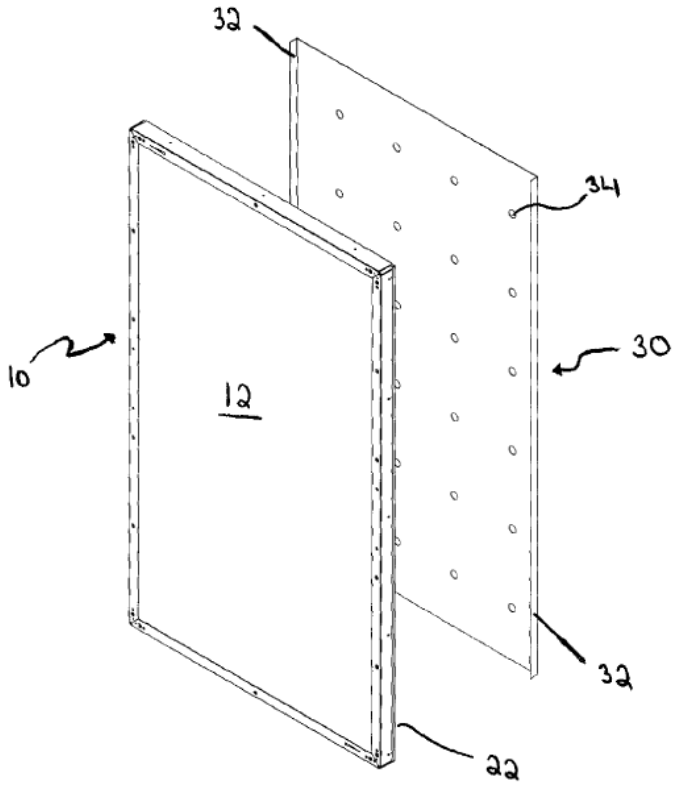

(*Id.*, Fig. 4.)

C. Prosecution History

During prosecution of the ’322 patent, in an office action dated February 17, 2015, the Examiner rejected each of claims 1-16 as anticipated by or obvious over U.S. Published Patent Application No. 2008/0218446 (“Yamanaka”) (Ex. 1036), U.S. Patent No. 7,753,567 (“Kang”) (Ex. 1037), and U.S. Published Application No.

2009/0154096 ("Iyengar") (Ex. 1038). (*See* Ex. 1034, pp.67-74). After Applicant amended the claims to overcome the rejections, the '322 patent issued on October 27, 2015.

VI. CLAIM CONSTRUCTION

Two terms in the '322 patent claims were construed in the MRI-Civiq Litigation. The Delaware District Court issued a Claim Construction Order dated October 3, 2018 (Ex. 1011), and a Memorandum Opinion dated September 27, 2018 (Ex. 1012). Solely for purposes of this Petition, Petitioners believe the Board should apply the Delaware District Court's constructions. Petitioners also propose constructions for two other terms.

A. "Between"

The District Court construed the term "**between**" to mean "in the space that separates." (Exs. 1011, p.1; 1012, pp.9-10.)

B. "Substantially Parallel"

The District Court construed the term "**substantially parallel**" to mean "approximately parallel." (Exs. 1011, p.2; 1012, p.14.)

C. "A Fan [Placed/Positioned] to Draw [Ambient] Air Between the Constricted Convection Plate and the [Rear Posterior/Posterior Surface]"

The Board should also construe the term "**a fan [placed/positioned] to draw [ambient] air between the constricted convection plate and the [rear posterior/posterior surface]**" in claims 1 and 4 to mean "a fan positioned to pull

[ambient] air through and out of the space that separates the constricted convection plate and the rear posterior/posterior surface." (Ex. 1002, ¶75.) Such an interpretation is consistent with usage of the term "draw" in the specification as well as the plain and ordinary meaning as set forth in general purpose dictionary usage. (*Id.*) It is also consistent with the District Court's construction of "between."

D. "A Means for Forcing Air Between the Constricted Convection Plate and the Posterior Surface of the Electronic Display"

The Board should also construe the term "**a means for forcing air between the constricted convection plate and the posterior surface of the electronic display**" as a "means-plus-function" limitation. Claim terms containing the word "means" are presumed to require construction according to 35 U.S.C. § 112(6). Here, the recited function is "forcing air between the constricted convection plate and the posterior surface of the electronic display." *See Williamson v. Citrix Online, LLC*, 792 F.3d 1339, 1349 (Fed. Cir. 2015 (en banc); *Micro Chem., Inc. v. Great Plains Chem. Co., Inc.*, 194 F.3d 1250, 1258 (Fed. Cir. 1999). The corresponding structure to perform this function is one or more fans **52**, air conditioning unit **110**, and their equivalents. (*See* Ex. 1001, 6:65-67, 7:38-54; *see also id.*, 2:67-3:4, 5:50-52, 6:5-7, 6:9-12, 8:52-56, claim 13; *see also Texas Digital Sys., Inc. v. Telegenix, Inc.*, 308 F.3d 1193, 1208 (Fed. Cir. 2002); Ex. 1002, ¶¶76-77).

For the purposes of this Petition, Petitioners believe all other claim terms from the ’322 patent should be given their plain and ordinary meaning.[2]

VII. OVERVIEW OF THE PRIOR ART

A. Kim

U.S. Patent No. 7,800,706 (“Kim”) (Ex. 1005), entitled “Cooling Fan Unit and Display Apparatus Having the Same,” issued on September 21, 2010 from Application No. 11/778,138, filed on July 16, 2007. Kim is prior art to the ’322 patent pursuant to at least pre-AIA 35 U.S.C. § 102(e)(2).

Kim is directed to “a cooling fan unit” that “efficiently cool[s] heat generated from a backlight unit, and a display apparatus having the same.” (Ex. 1005, 1:46-49.) Kim’s display apparatus **100** “includes “a casing **110**” that accommodates and supports an LCD panel **120**, a backlight unit **130**, a shield cover **140**, and a cooling fan **200**:

[2] Nothing in this Petition should be construed as an admission that the claims, read in light of the specification and the prosecution history, inform a POSITA with reasonable certainty about the scope of the invention. Petitioners reserve their rights to assert that the claims of the ’322 patent are invalid for indefiniteness.

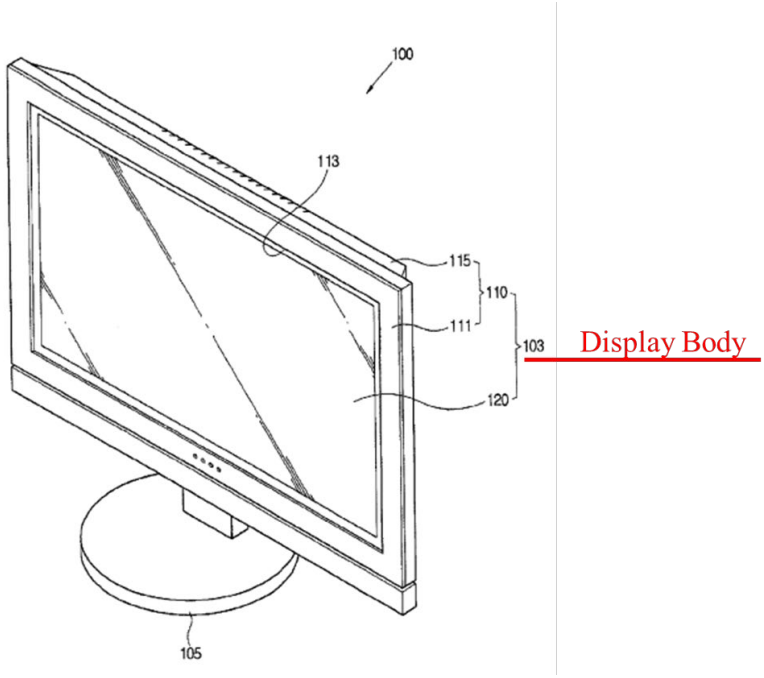

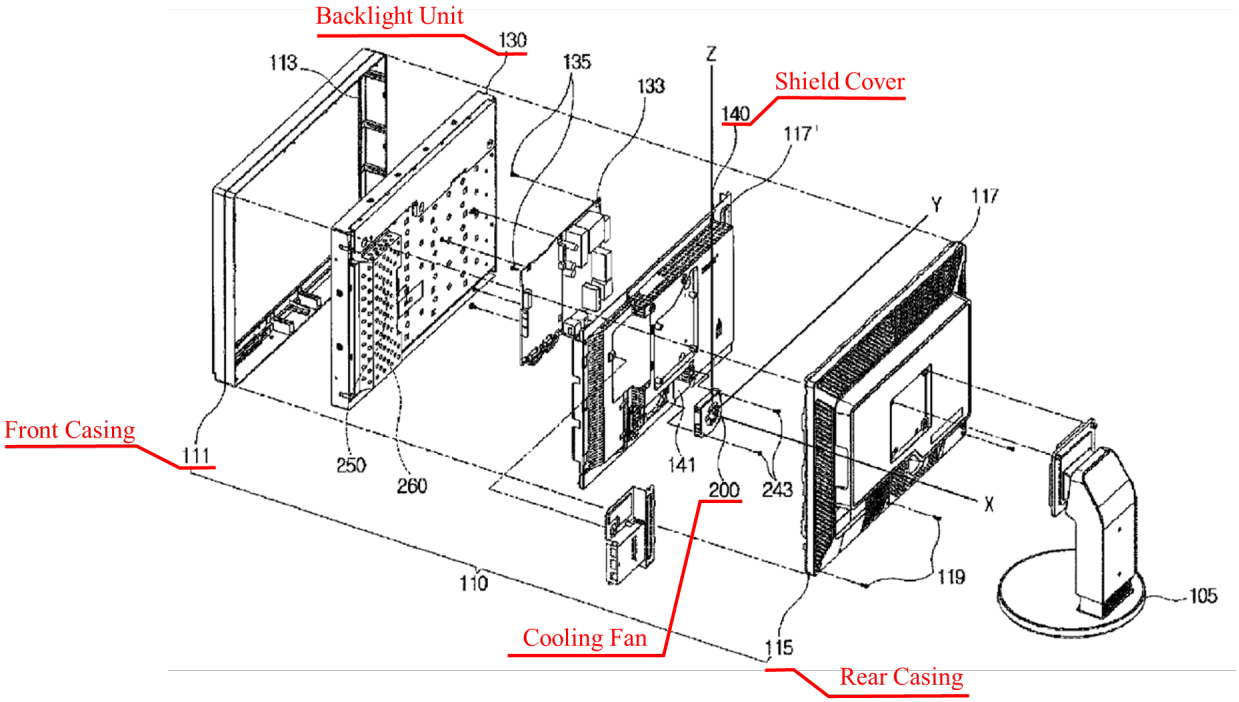

(*Id.*, 4:1-12, FIGs. 1-2 (annotated).)

Figure 5 in Kim explains the cooling system in more detail:

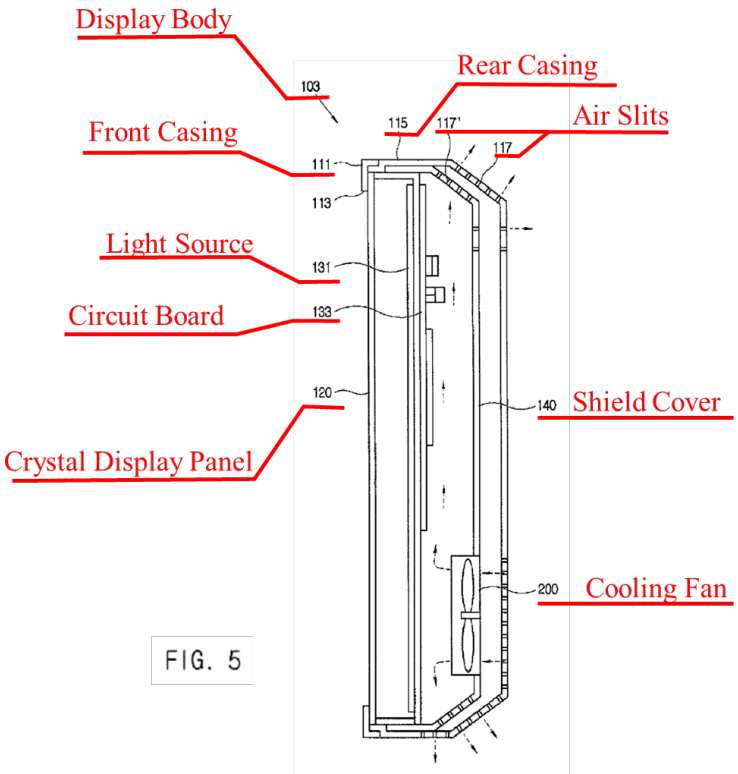

(*Id.*, FIG. 5 (annotated).)

The "backlight unit **130** comprises a plurality of light emitting diodes (LEDs) as a light source **131** that generates light." (*Id.*, 4:33-35.) The shield cover **140** is "provided in the rear side of the backlight unit **130** … with a space formed between the shield cover **140** and the backlight unit **130**." (*Id.*, 4:52-55.)

To cool the display apparatus, a "cooling fan unit **200** is combined to the shield cover **140** to cool the heat generating parts, such as the light source **131** and the circuit board **133** of the backlight unit **130**." (*Id.*, 5:16-18.) Air enters the chamber created by shield cover **140** through fan **210** and exits through air slits **117′**. (*Id.*, 4:59-63.)

B. Hong

U.S. Patent Publication No. 2007/0171353A1 ("Hong") (Ex. 1029), "Liquid Crystal Display Device," published on July 26, 2007, from Application No. 11/638,210, filed on December 13, 2006. Hong is prior art to the '322 patent pursuant to at least pre-AIA 35 U.S.C. § 102(a) and (e).

Hong discloses that its LCD device includes "a backlight assembly **120** and a liquid crystal panel **110** [which] may be disposed over an inner surface of a bottom case **150**." (*Id.*, ¶[0025].)

As shown in Figure 4, "[t]he backlight assembly **120** includes a plurality of LEDs **124**," which "may be arranged on a plurality of base PCBs **122**." (*Id.*, ¶[0029.) "The base PCBs **122** are arranged in parallel on the bottom case **150**":

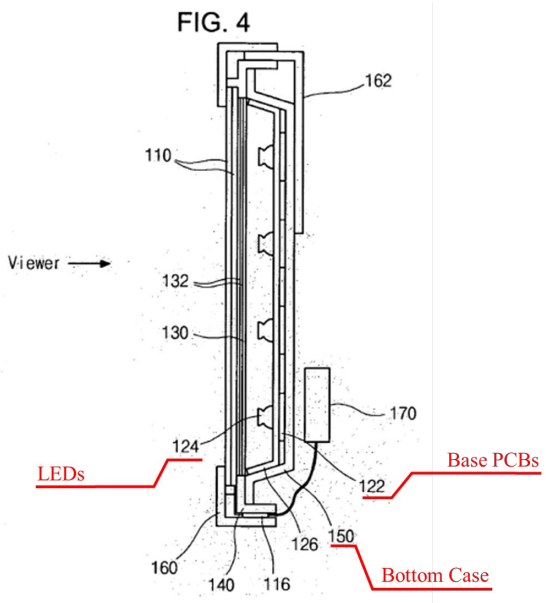

(*Id.*, ¶[0029], FIG. 4 (annotated).)

C. Tachikawa

Japanese Published Patent Application 2006-330196 ("Tachikawa") (Exs. 1025-1026),[3] titled "Plasma Television and Image Display Device," was published on December 7, 2006.[4] Tachikawa is prior art to the '322 patent pursuant to at least pre-AIA 35 U.S.C. § 102(b).

Tachikawa describes "a plasma television and an image display device having a structure wherein the inside of the housing is cooled." (Ex. 1026, ¶[0001].) As reflected by Figure 1, Tachikawa discloses that a plasma display panel ("PDP") is "housed in [a] cabinet **30** in a state of being supported by two brackets **20** on the rear side":

[3] Unless otherwise stated, all citations are to the Certified Translation of Tachikawa (Ex. 1026).

[4] References to elements in Tachikawa's patent figures have been bolded.

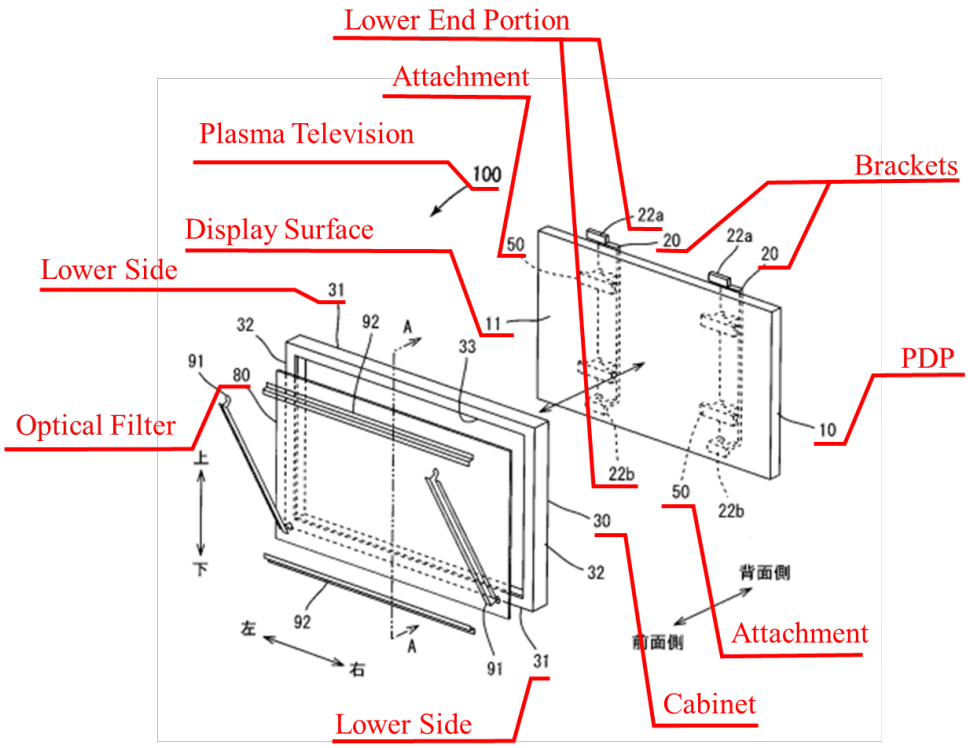

(*Id.*, ¶[0019], FIG. 1 (annotated).) Each of the two brackets **20** "is connected to a stand member (not shown) which … support[s] substantially the entire plasma television **100** at a predetermined height." (*Id.*, ¶[0019].) Further, "the rear cabinet **40** covering the rear side of the plasma television is also fixed to the bracket **20**," such that "the front cabinet **30**, the PDP **10**, and the rear cabinet **40** are all fixed to the bracket **20**." (*Id.*, ¶[0020].)

D. Takahashi

Japanese Unexamined Patent Publication No. H11-68363 ("Takahashi") (Ex. 1007-1008),[5] titled "Heat Dissipation Structure for Electronics," published on March 9, 1999. Takahashi is prior art to the '322 patent pursuant to at least pre-AIA 35 U.S.C. § 102(b).

Takahashi improves airflow control in "the heat dissipation structure of electronic devices such as PDP (plasma display [panel]) devices" (Ex. 1008, ¶[0002], FIG. 2.) An "air leak prevention part [**9**] … is fitted to … through-hole **8a**, which is formed into a hollow body … as shown in FIG. 2":

[5] Unless otherwise stated, all citations are to the Certified Translation of Takahashi (Ex. 1008).

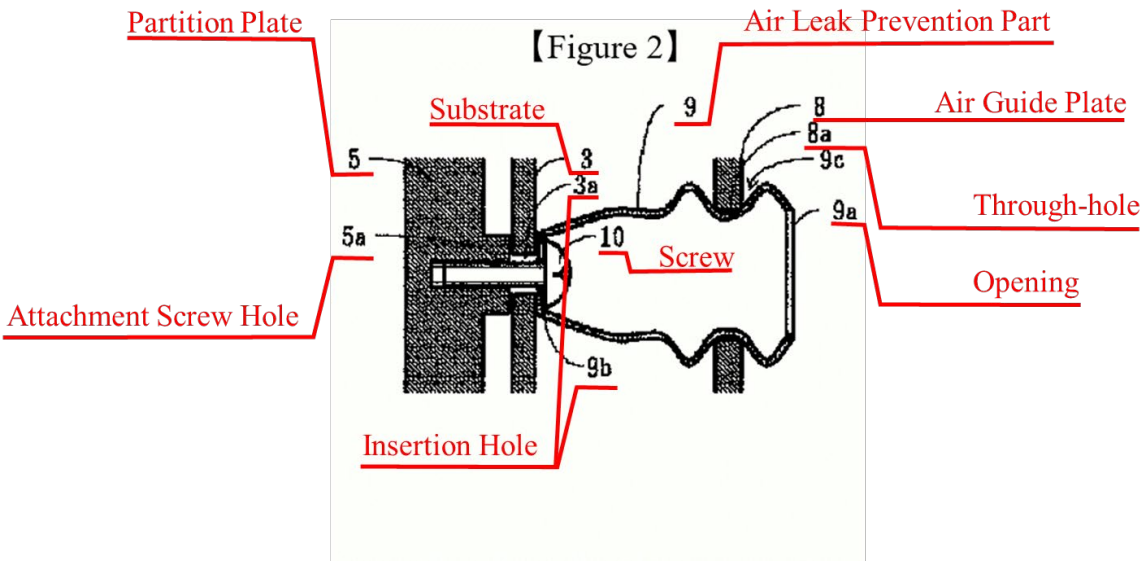

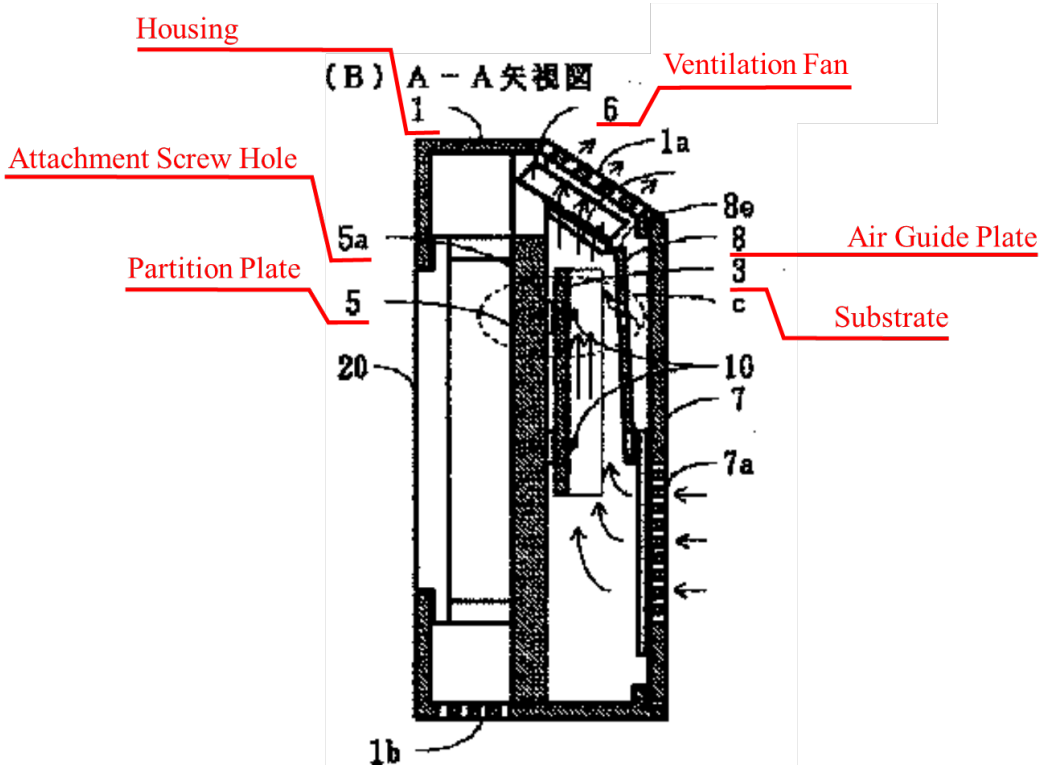

(*Id.*, ¶[0010], FIGs. 1(B) & 2 (annotated).)

Takahashi's "heat dissipation structure for electronics" also allows "the aforesaid air leak prevention part **9** [to be] integrally formed with the aforesaid air guide plate **8**, and, as shown in the drawings, a tubular recess **8b** is formed in the

air guide plate **8**, thereby forming an opening **8c**, and an insertion hole **8d** is formed in the base of the same recess **8b**."

【Figure 3】

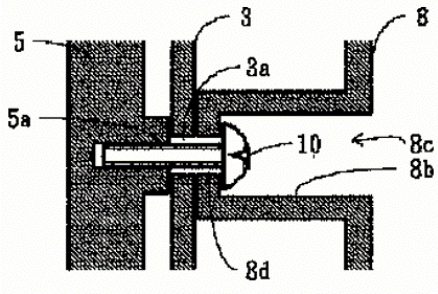

(*Id.*, ¶[0011], FIG. 3.)

E. Na

Korean Patent Publication No. 10-2006-0016469 ("Na") (Ex. 1009-1010)[6], titled "Backlight Unit and Liquid Crystal Device Including the Same," published on February 26, 2006. Na is prior art to the '322 patent pursuant to at least pre-AIA 35 U.S.C. § 102(b).

Na discloses a "Backlight Unit and a Liquid Crystal Display (LCD) Device Including the Same," in which the backlight unit "includes a light generator and a storage container." (Ex. 1010, Abstract.) The LCD device "uses the electrical and optical characteristics of liquid crystal to display an image." (*Id.*, p.2.)

[6] Unless otherwise stated, all citations are to the Certified Translation of Na (Ex. 1010).

The light generator "generates light," while the storage container "accommodates the light generator, and an intake unit through which external air is sucked and an exhaust unit through which internal air is discharged are formed." (*Id.*, Abstract.) A "backlight unit **500** includes an areal light source device **100** and a storage container **200**":

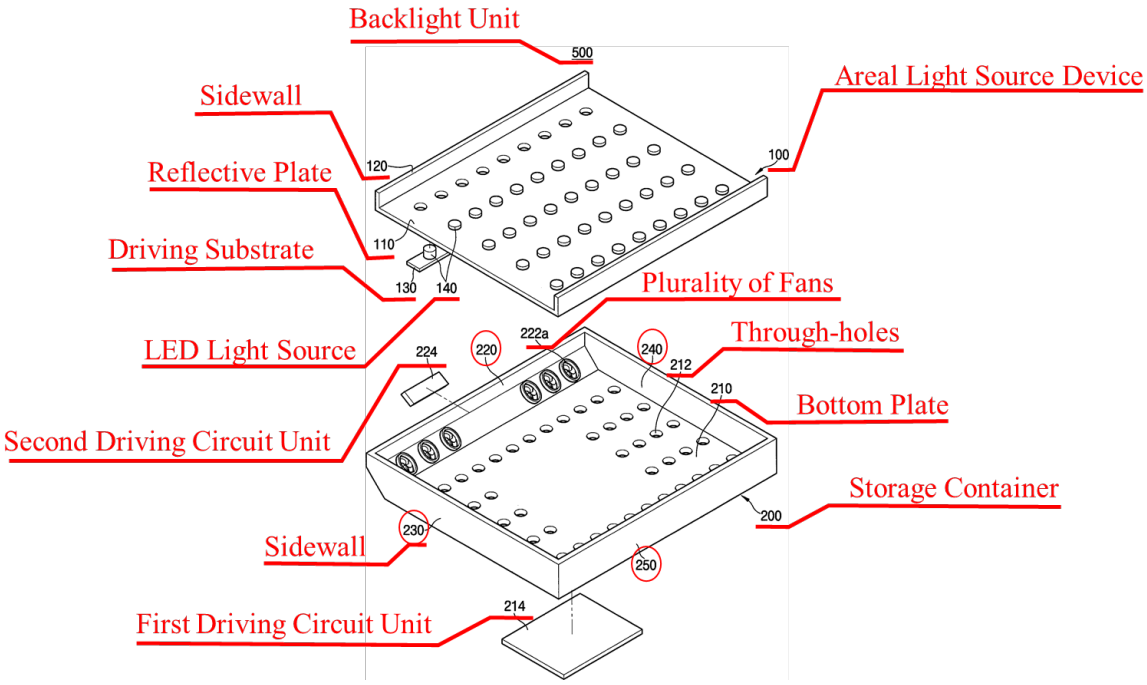

(*Id.*, p.4, FIG. 1 (annotated).) The "areal light source device **100**" includes "a reflective plate **110**, a sidewall **120**, a driving substrate **130**, and a plurality of light emitting diode [LED] light sources **140**." (*Id.*, p.4.)

The "storage container **200** includes a bottom plate **210**, a first sidewall **220**, a second sidewall **230**, a third sidewall **240**, and a fourth sidewall **250**." (*Id.*) The bottom plate **210** "has a rectangular flat plate shape and includes a first driving circuit unit **214** and a plurality of through-holes **212**." (*Id.*, p.4.) The "through-

holes **212** are formed in portions except for the portion where the first driving circuit unit **214** is disposed, and are formed through the bottom plate **210**." (*Id.*) A "plurality of fans **222a** are formed on the first sidewall **220**." (*Id.*) Air "may move through the through-holes **212**," and the through-holes **212** may "function as an intake unit through which external air is sucked." (*Id.*)

F. Kimura

U.S. Patent Application Publication No. 2006/0199514 ("Kimura") (Ex. 1004), titled "Cooling Fan and Image Display Apparatus," published on September 7, 2006. Kimura qualifies as prior art to the '322 patent pursuant to pre-AIA 35 U.S.C. §102(b).

Kimura is directed to "[a] system for cooling an electronic display" using "a cooling fan." (Ex. 1004, ¶[0003].) Exemplary Figure 9 depicts the disclosed display:

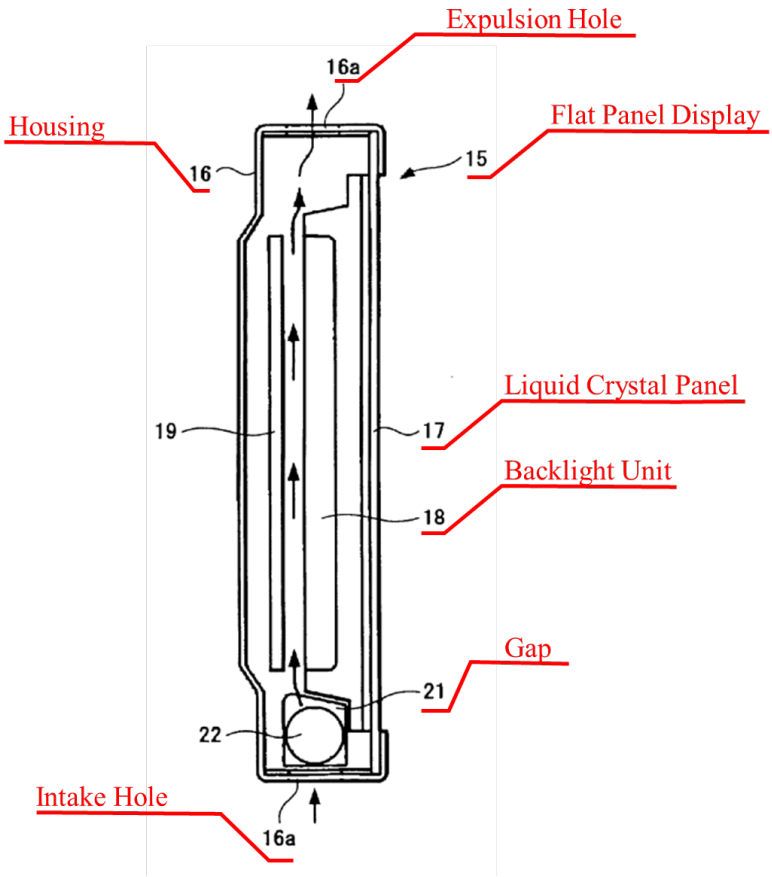

(*Id.*, ¶[0078], FIG. 9 (annotated).) Kimura teaches that "[b]y circulating a wind generated by rotationally driving the cooling fan **20** in the form of a "film" to the rear surface of the backlight unit **18**, the entire backlight unit **18** is cooled uniformly." (*Id.*, ¶[0078].)

G. Kochiyama

Japanese Unexamined Patent Application Publication No. 2003-162228 ("Kochiyama") (Exs. 1027-1028), titled "Plasma Display Device," was published on June 6, 2003. Kochiyama qualifies as prior art to the '322 patent pursuant to at least pre-AIA 35 U.S.C. § 102(b).

Kochiyama describes a plasma display device including "a chassis **2** having a heat radiating function [that] holds the PDP **1** on one main surface side and holds circuit boards **3** required to display a video image (drive-related boards, power supply boards, and the like) on the other main surface side." (Ex. 1028, ¶[0019].) Kochiyama explains that "as illustrated in FIG. 3, each circuit board **3** consists of a board body **3a** and a group of parts **3b** welded to the board body **3a**. The method of fixing the circuit board **3** to the chassis **2** is to fix the circuit board with screws **6** through a chassis support **5**, for example, so that there is a gap **4** between the chassis **2** and the board body **3a**." (*Id.*)

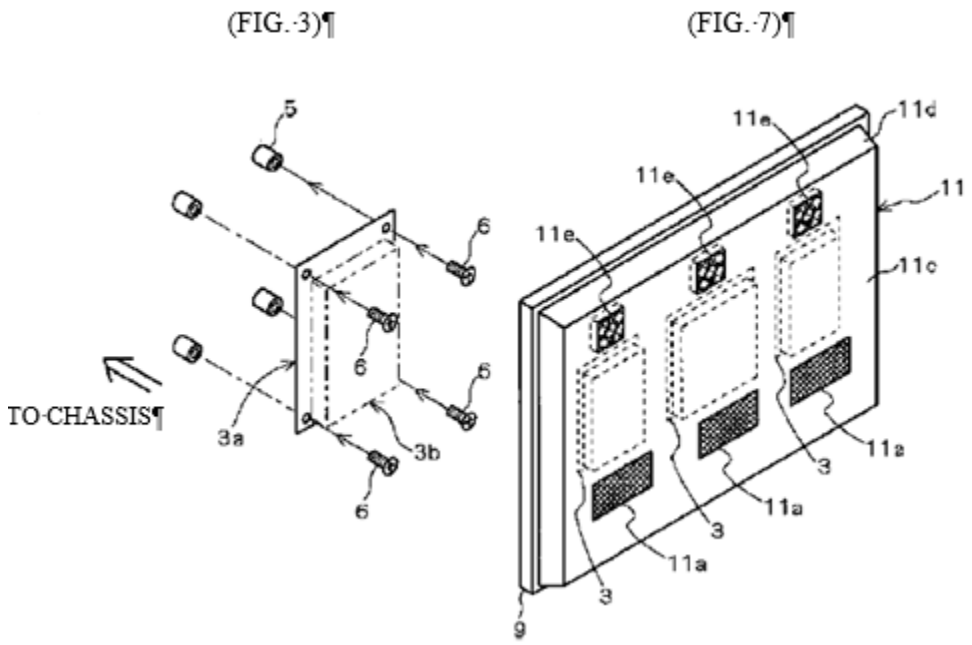

(*Id.*, FIGs 3&7.)

H. Cho

U.S. Patent Publication No. 2006/0132699 ("Cho") (Ex. 1006) titled "Cooling Apparatus and Liquid Crystal Display Device Having the Same" published on June 22, 2006. Cho is prior art to the '322 patent pursuant to at least pre-AIA 35 U.S.C. § 102(b).

Cho discloses "a display device comprising a liquid crystal panel, a backlight unit, a chassis, and a cooling apparatus." (*Id.*, ¶[0016].) The backlight unit **300** "may include an array of LEDs disposed on the LED circuit substrate **311**." (*Id.*, ¶[0036].)

As illustrated in Figure 5, during operation of the LCD device **1**, "heat is generated by the LED **321**." (*Id.*, ¶[0053]-[0055].) Cho's cooling fan **520** introduces "air … into the heat sink **530** through the first opening **511**" and flows along an air path formed by the casing **510** and the heat sink **530** and discharges through the second opening **512**." (*Id.*, ¶[0056].) Thus, "the air path may be formed from the second opening **512** to the first opening **511** in accordance with an operating direction of the cooling fan **520**." (*Id.*)

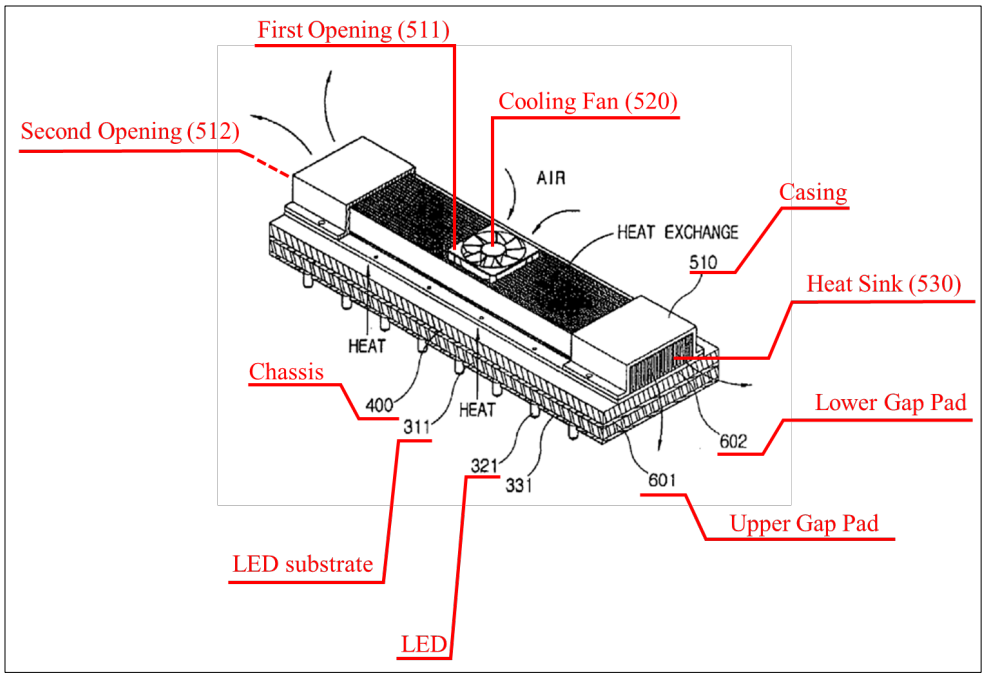

(*Id.*, FIG. 5 (annotated).)

VIII. GROUND 1 – CLAIMS 4 AND 7 ARE OBVIOUS OVER KIM IN VIEW OF HONG

A. Independent Claim 4

The combination of Kim and Hong renders obvious each limitation of claim 4. (Ex. 1002, ¶¶112-149).

1. Element 4[pre]

To the extent the preamble is limiting, it is disclosed by the combination of Kim and Hong." (*Id.*, ¶¶113-116.)

Kim discloses a display apparatus **100** that includes "liquid crystal display [LCD] panel **120**." (Ex. 1005, 4:4-6.)

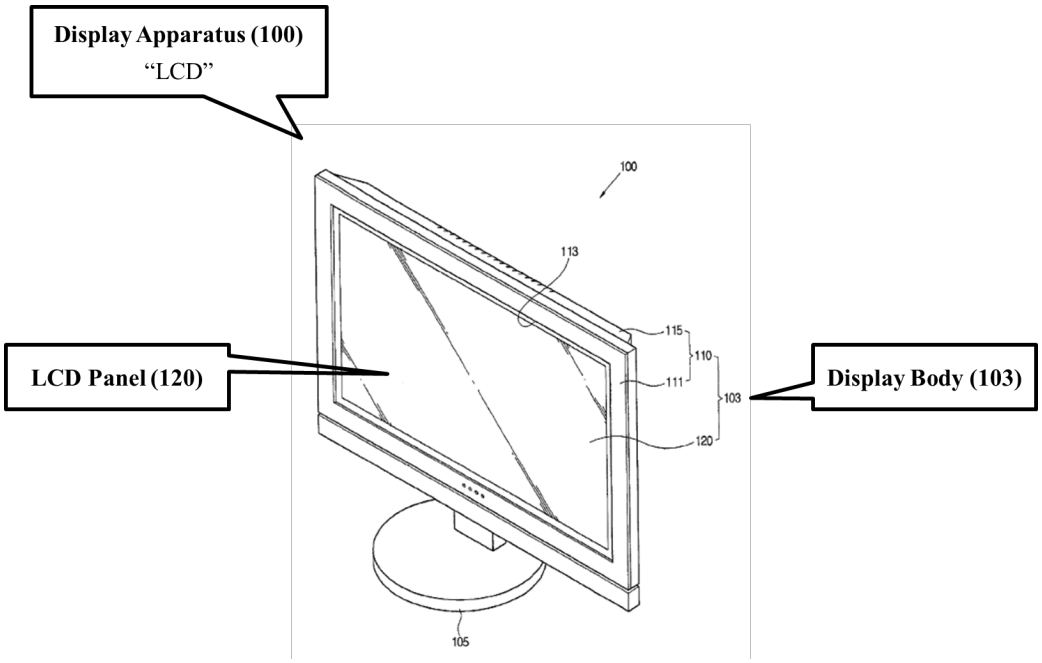

(*Id*., Figure 1 (annotated).)

2. Element 4[a]

The combination of Kim and Hong renders obvious "**a liquid crystal stack**." (Ex. 1002, ¶¶117-119.)

Kim discloses that "[t]he liquid crystal display panel **120** forms an image and displays the formed image." (Ex. 1005, 4:26-27; *see also id.*, Abstract, 1:57-67, 2:47-57, 7:10-15.) A POSITA would have understood that a LCD display panel includes a liquid crystal stack.[7] (Ex. 1002, ¶118.)

---

[7] The specification of the '322 patent does not define the term "liquid crystal stack," but states the "display 10 may be the front glass plate of a liquid crystal display stack." (Ex. 1001, 9:19-21.)

Further, if the term "**liquid crystal stack**" is intended to refer to the individual liquid crystal sub-layers (which, when stacked together, collectively form the liquid crystal layer of an LCD panel), a POSITA would know that these liquid crystal sub-layers are necessarily present in a liquid crystal layer of every LCD panel as part of its structure. (*Id.*, ¶119.)

3. Element 4[b]

Kim in combination with Hong renders obvious claim 4[b]. (*Id.*, ¶¶120-128.)

As shown in Figures 2 and 5, Kim discloses a backlight unit **130** ("a backlight assembly") that "is provided behind the liquid crystal display panel and has a light source [**131**] that emits light[.]" (Ex. 1005, 1:61-63, 2:51-53; Ex. 1002, ¶121.):

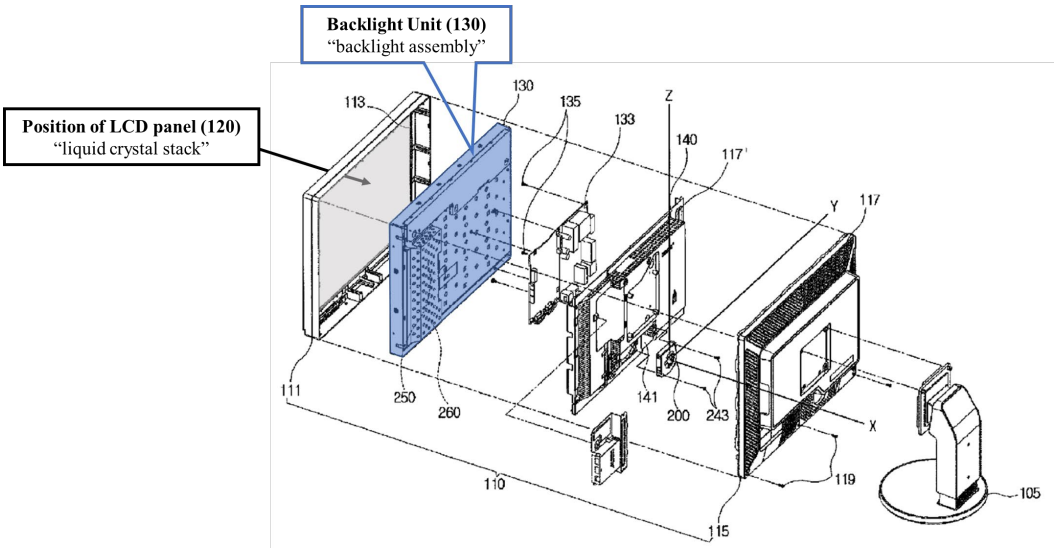

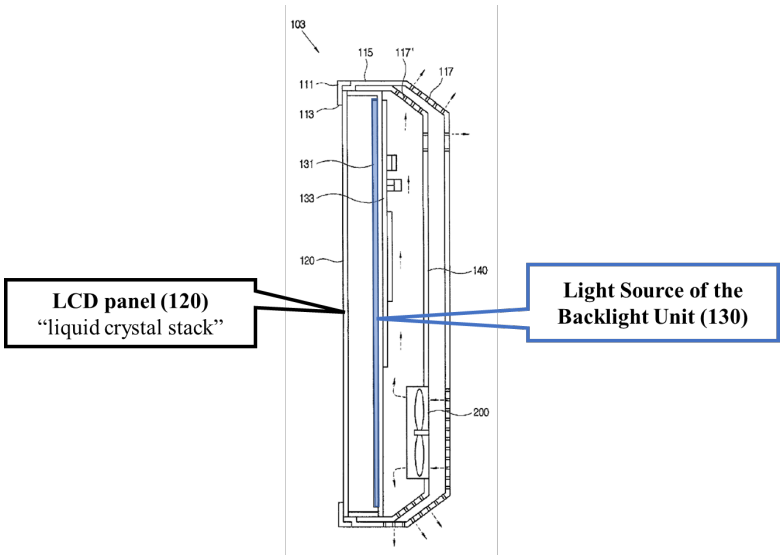

(Ex. 1005, FIGs. 2&5 (annotated).)

The "backlight unit **130** comprises a plurality of light emitting diodes (LEDs) as a light source **131**" (*Id*., 4:33-35) that are widely distributed on the plane of the backlight unit **130**." (*Id*., 5:35-36.). A POSITA would recognize, therefore, that the LEDs must be mounted on a first side of a PCB included as part of the backlight unit **130**. (Ex. 1002, ¶123.)

Kim discloses "**a posterior surface on the rear side of the PCB**" in the form of the rear side of the backlight unit, as depicted in annotated Figures 2 and 5:

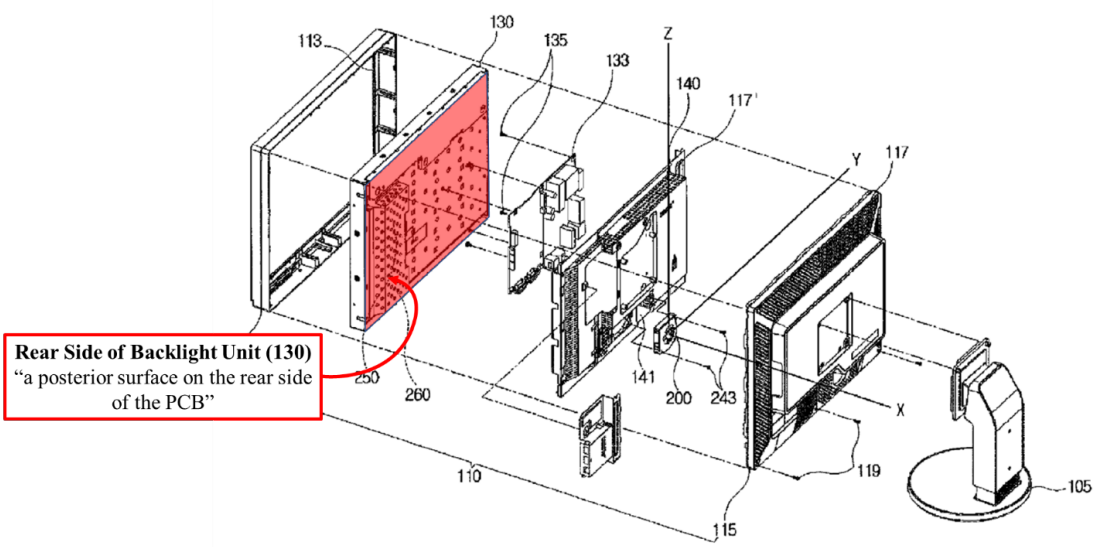

(Ex. 1005, 4:52-55, FIG. 2 (annotated); Ex. 1002, ¶127.)

Hong discloses an LCD device that includes "a backlight assembly **120** and a liquid crystal panel **110**." (Ex. 1029, ¶[0025].) As shown in annotated Figure 3 below, the backlight assembly **120** is located behind the liquid crystal panel **110** ("**liquid crystal stack**"). (Ex. 1002, ¶124.)

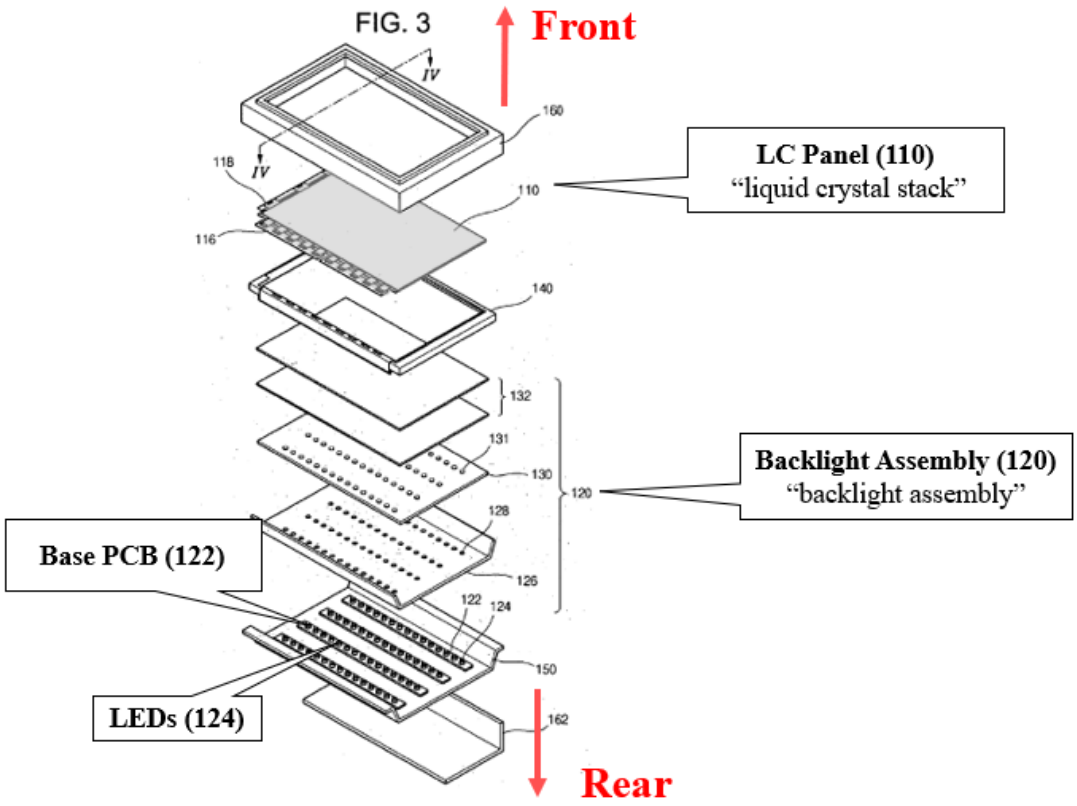

(Ex. 1029, ¶[0029], FIG. 4 (annotated).)

Hong likewise discloses a "**printed circuit board (PCB) having front and back sides**" with "**a plurality of LEDs mounted on the front side of the PCB**." (Ex. 1002, ¶¶125-126.) Hong discloses that "[t]he backlight assembly **120** includes a plurality of LEDs **124**" that "may be arranged on a plurality of base PCBs **122**." (Ex. 1029, ¶[0029.) "[T]he base PCB **122** is placed on an inner surface of the bottom case **150**." (*Id.*, ¶[0033].) As shown in Figure 5, a POSITA would have understood that LEDs **124** are mounted on the "**front side of the PCB**" and that the "**back side**" of the PCB faces bottom case **150**:

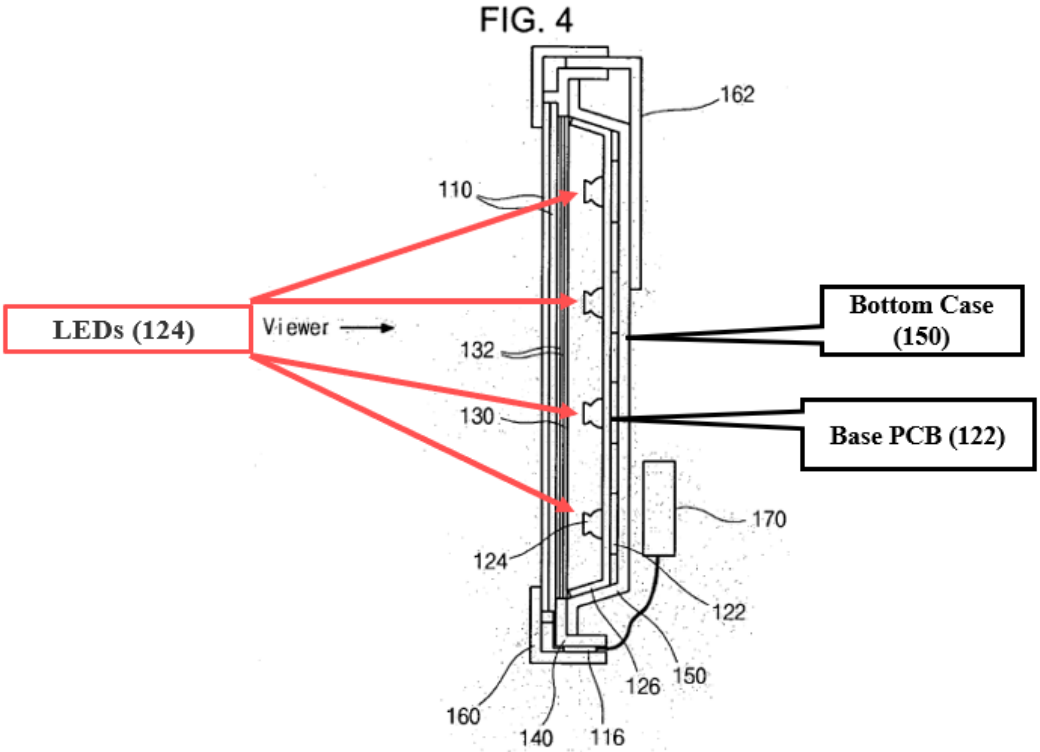

(*Id.*, FIG. 5 (annotated); Ex. 1002, ¶126.)

4. Element 4[c]

Kim in combination with Hong renders obvious claim 4[c]. (Ex. 1002, ¶129-134.)

Kim discloses a "**constricted convection plate**" in the form of "shield cover **140**" that is "provided in the rear side of the backlight unit **130**." (Exs. 1005, 4:52-55, FIG. 5; 1002, ¶130.) The "shield cover" combined with a cooling fan "supplies cooling air to the backlight unit." (Ex. 1005, 2:60-61, 4:59-63.) "[C]ooling air flows through a space between the shield cover **140** and the backlight unit **130**." (*Id.*, 5:37-38.) As Figure 5 reflects, the shield cover **140** is "**placed behind and substantially parallel with the posterior surface**" of the backlight

unit **130**. In combination with Hong, the shield cover **140** would be "**placed behind and substantially parallel with the posterior surface of the PCB**":

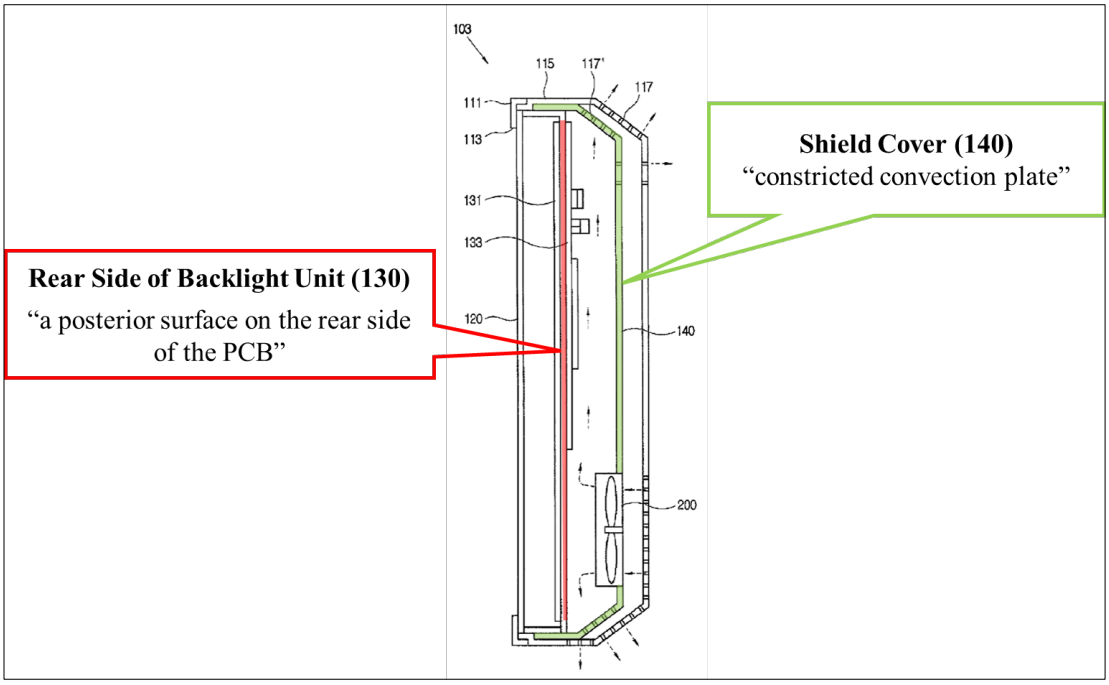

(*Id.*, 4:52-55, FIG. 5 (annotated); *see also* Exs. 1002, ¶131; 1011, p.1; 1012, pp.6-8.)

Because Kim's "shield cover **140**" guides airflow to facilitate convective heat transfer from the backlight, a POSITA would have understood that the "shield cover **140**" must constrict air generated by the fan in order to cool the backlight. (Ex. 1002, ¶131.) Kim achieves this constricted airflow by reducing the volume of the space behind the display which allows air from cooling fan **210** to flow across the backlight unit **130**. (*Id.*, ¶131.)

5. Element 4[d]

Kim in combination with Hong renders obvious claim 4[d]. (Ex. 1002, ¶¶135-

139.)

Kim discloses "cooling fan unit **200**" including "cooling fan **210**" that is "combined to the shield cover **140** to cool the heat generating parts such as the light source **131** and the circuit board **133** of the backlight unit **130**." (Ex. 1005, 5:16-20, FIG. 5 (annotated).)

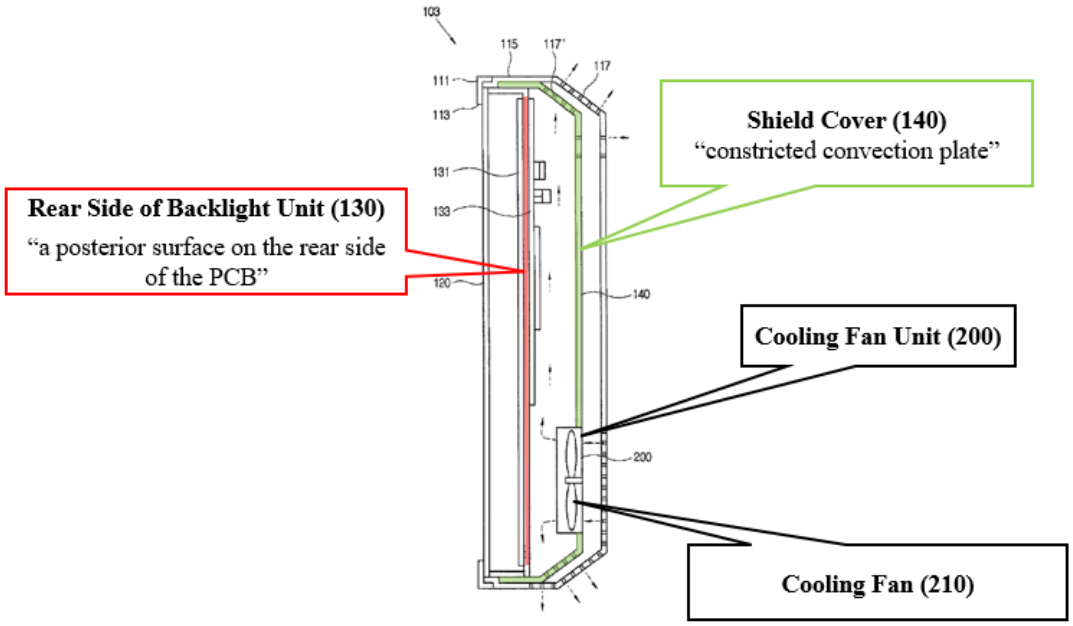

"The cooling fan **210** may draw in the cooling air from the outside into the heat generating parts or discharge the cooling air to the outside through the heat generating parts depending on its rotation direction." (*Id.*, 5:42-45.) Kim further teaches, "[t]he intake and discharge directions of the air through the cooling fan **210** may be changed in various ways according to the arrangement of the heat generating parts, the number of cooling fans **210**, etc." (*Id.*, 7:62-65; *see also id.*,

5:4-6.) For example, "[t]he cooling fan **250** [sic, **210**] of the display apparatus according to the exemplary embodiment may be provided to have a structure in which external air *is discharged to the outside through the cooling fan* **250** [sic, **210**] via the heat generating parts … " (*Id*., 8:16-20 (emphasis added).)

Kim's fan draws air through the space that separates "shield cover **140**" (i.e., the "c**onstricted convection plate**") and the rear-facing surface of "backlight **130**" (i.e., "**posterior surface**" on the rear side of the PCB), and thus satisfies the Delaware District Court's construction. (Ex. 1002, ¶137.) Accordingly, Kim discloses or renders obvious a fan positioned to pull air through and out of the space that separates the constricted convection plate and the posterior surface of the backlight. (*Id*.)

6. Motivation to Combine Kim and Hong

A POSITA as of March 3, 2008 would have been motivated to modify Kim's backlight unit to include Hong's PCB with multiple LEDs mounted to its front side. (Ex. 1002, ¶140.) A POSITA would have understood that PCBs are an integral part of a backlight unit in an LCD device commonly used in the art to mechanically support and drive the LEDs of the backlight assembly. (*Id*.) In other words, a POSITA would have known that Kim's LEDs need to be mounted on a first side of a PCB within backlight unit **130** in order to operate as intended and that Hong's PCB would have been suitable. (*Id.*)

A POSITA would have immediately recognized the similarities between Hong's and Kim's backlight configurations and ascertained that Kim's LEDs (e.g., "[t]he light source **131** of the backlight unit **130** [which] is widely arranged **on a plane** of the backlight unit **130**" (Ex. 1005, 4:43-45)) could be predictably mounted to Hong's base PCB **122**. Moreover, the POSITA would have recognized cost savings using Hong's LED and PCB arrangement. (Ex. 1002, ¶141.) Accordingly, a POSITA would have been motivated to utilize a PCB such as that disclosed by Hong. (*Id.*) The combination would have amounted to no more than the use of a known technique (LEDs mounted on narrow PCBs) to improve Kim's similar backlight to obtain predictable results. Accordingly, the POSITA would have had a reasonable expectation of success. (*Id.*)

B. Claim 7

Kim in combination with Hong renders claim 7 obvious. (Ex. 1002, ¶¶142-149.)

Kim's LCD has a "**housing**" in the form of "a casing **110** that accommodates and supports the [LCD] display panel **120** and the backlight unit **130** to form an external shape, and comprises a front casing **111** and a rear casing **115**." (Ex. 1005, 4:8-12.)

As seen in Figure 2, the LCD display panel **120**, backlight unit **130**, shield cover **140** and fan unit **200** (i.e., the "LCD stack," "**backlight assembly**,"

"**constricted convection plate**" and "**fan**") are all located within the front and rear casing (i.e., "**housing**"):

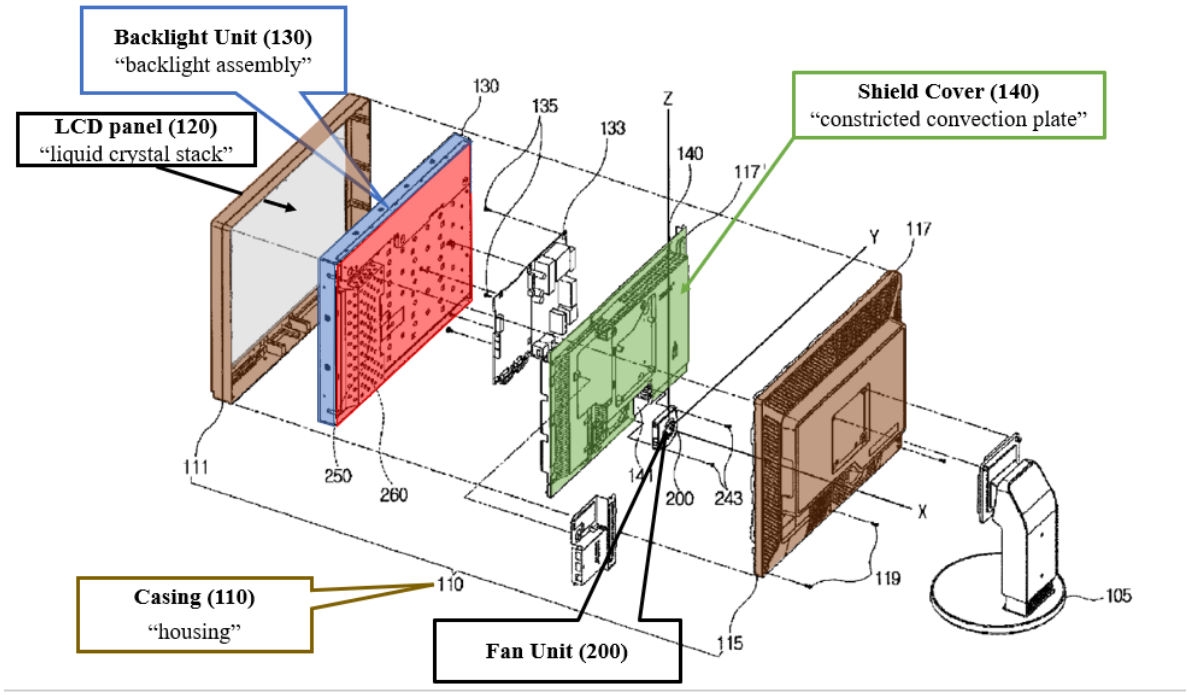

(*Id.*, FIG.2 (annotated); Ex. 1002, ¶144.)

Kim further discloses that "[t]he rear casing **115** has a plurality of air slits **117** through which air produced by a cooling fan **210** comes in and out." (Ex. 1005, 4:22-25.) "Air slits **117**" are "**entrance apertures within the housing which permits external ambient air to enter the housing**." (Ex. 1002, ¶144.) This air then flows "**between the constricted convection plate and the posterior surface of the PCB"** for the reasons explained above with respect to element 4[c]. (*Supra* §VIII.A.4.)

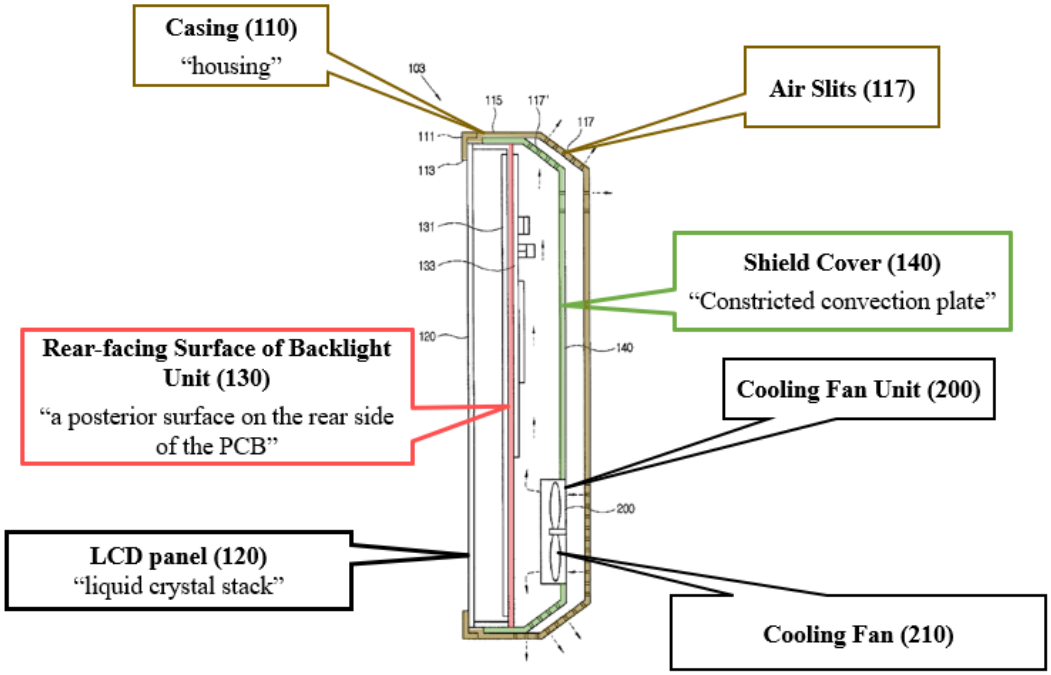

(Ex. 1005, FIG. 5 (annotated).)

IX. GROUND 2: CLAIM 5 IS OBVIOUS OVER KIM, HONG, AND TACHIKAWA

A. Claim 5

Claim 5 is obvious over the combination of Kim, Hong and Tachikawa. (Ex. 1002, ¶¶150-163.) Claim 4 is obvious over Kim and Hong for the reasons discussed above. (*Supra* §VIII.A.)

As seen in Figure 5, a POSITA would have understood that Kim's shield cover **140** (i.e., "**constricted convection plate**") is connected to the backlight unit **130** using brackets (colored yellow).

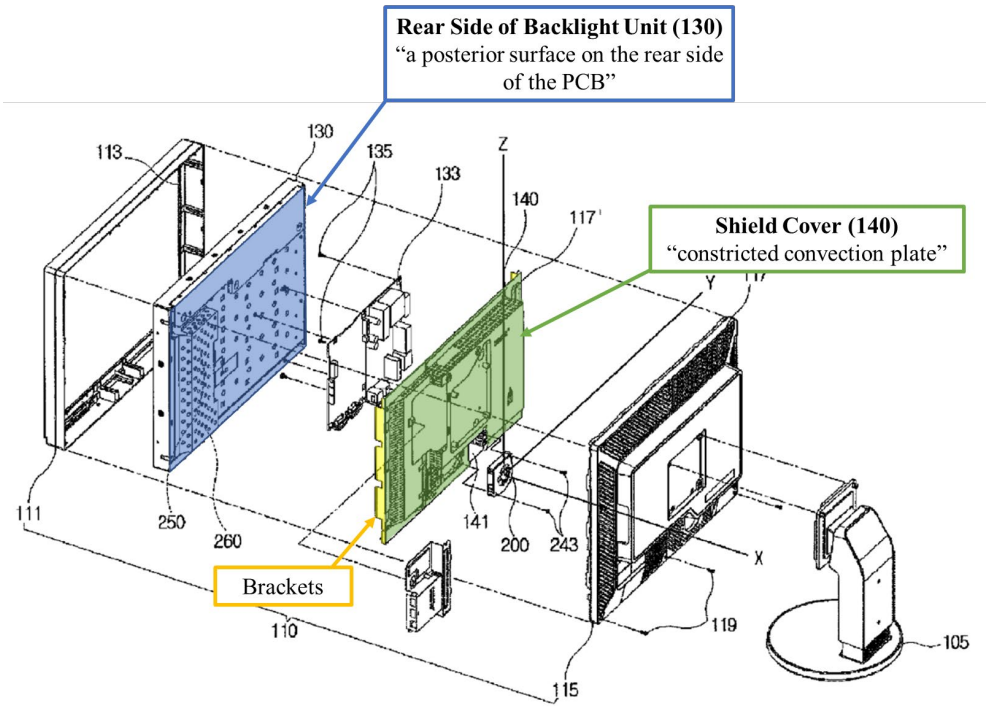

(Exs. 1005, Figure 5 (annotated); 1002, ¶151.) Indeed, Kim teaches that the shield cover **140** "is supported by at least one of the backlight unit **130** and the casing **110**." (Ex. 1005, 4:52-55.)

Tachikawa presents a convective cooling system for a PDP as reflected by Figures 1 and 2:

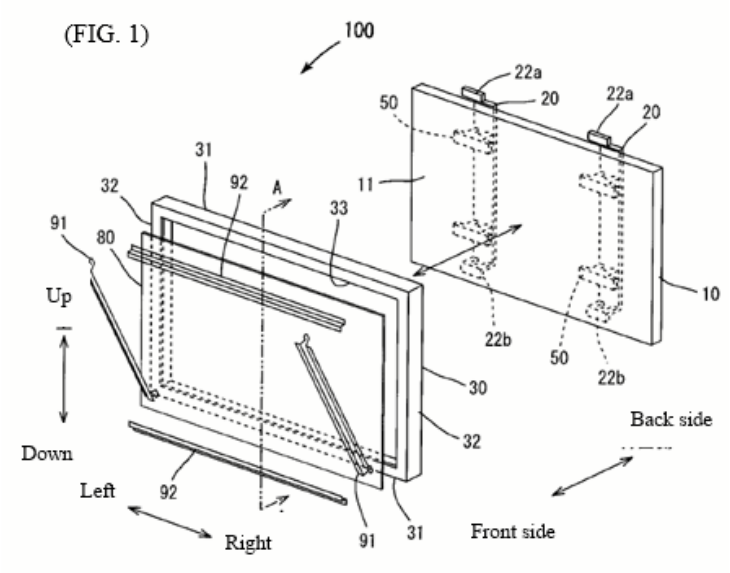

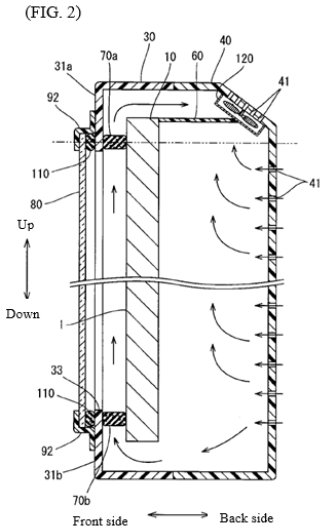

(Ex. 1026, FIGs 1-2.)

Tachikawa discloses that "[t]he PDP **10** is housed in the cabinet **30** in a state of being supported by two brackets **20** on the rear side. (*Id.*, [¶[0019]). "Specifically, the attachment **50** is fixed at four positions on the upper, lower, left, and right sides of the PDP **10**, and each set of the attachment **50** divided into two sets of left and right is fixed to each of the one brackets **20**." (*Id.*) Tachikawa discloses that "the rear cabinet **40** covering the rear side of the plasma television **100** is also fixed to the bracket **20**." (*Id.*, ¶[0020].) "Each of the two brackets **20** is connected to a stand member (not shown) which stands substantially perpendicular from an installation surface of the plasma television, thereby supporting substantially the entire plasma television at the predetermined height." (*Id.*; Ex. 1002, ¶¶153-154.)

B. Motivation to Combine Kim, Hong and Tachikawa

A POSITA would have been motivated to modify the display disclosed by the combination of Kim and Hong with the brackets disclosed by Tachikawa to improve Kim's display serviceability and structural strength. (Ex. 1002, ¶155.) Kim's shield cover **140** (i.e., "**constricted convection plate**") is connected to backlight unit **130** using brackets. (*Id*., ¶156.) However, Kim's brackets are obscured by casing **111** when assembled in the case, such that additional effort would be required to access and separate the shield cover **140** from the backlight assembly **130** when servicing the backlight assembly or circuit board **133**. (*Id*.) Accordingly, a POSITA would have been inclined to look for alternative bracket options to connect Kim's shield cover **140** to backlight **130**. (*Id*.) In addition, Kim's stand **105** is only connected to the rear casing **115**.

A POSITA looking to modify the bracket structure in Kim would have been motivated to look to other electronic displays that had addressed similar heat removal, including PDPs. (*Id.*, ¶159.) Alternative bracket options would have been well known to the POSITA at the time of the filing of the '322 patent. (*Id*., ¶¶157-158.)

Tachikawa provides an example of such a bracket structure. Tachikawa's brackets **20**, along with attachments **50**, allow removal of rear cabinet **40** with minimal effort, since the rear cabinet **40** is snapped on the PDP **10** through

brackets **20**. (*Id*., ¶161.) In addition, Tachikawa's mounting brackets provide for enhanced mounting stability. (*Id.*, ¶162.) A POSITA would have envisioned, based on the teachings from Tachikawa, that the rear side surface of Kim's backlight unit **130** would be fitted with brackets via a set of attachments so that the shield cover **140** can be attached on the extended upper and lower ends (**22a** and **22b**) of the brackets. (*Id*., ¶161.)

This adaptation would amount to the use of a known technique to improve similar devices in the same way and would produce predictable results. (*Id*., ¶162.) The substitution of Kim's bracket arrangement with Tachikawa's would permit easy disassembly of Kim's display without compromising its cooling ability. (*Id*.) In addition, connecting Kim's rear casing, shield cover, stand, and brackets together would improve the stability of Kim's display system. A POSITA would combine each of these known approaches with no change in their respective functions, and the combination would yield predictable results. (*Id.,* ¶162.) Accordingly, the POSITA would have had a reasonable expectation of success. (*Id*., ¶163.)

X. GROUND 3: CLAIM 8 IS OBVIOUS OVER KIM, HONG AND TAKAHASHI

A. Claim 8

Claim 8 is obvious over the combination of Kim, Hong and Takahashi. (Ex. 1002, ¶¶164-173.)

Kim discloses a "**constricted convection plate**" for the reasons discussed above with respect to claim 4[c] in Ground 3. (Ex. 1002, ¶165; *supra* §VII.A.4.)

Takahashi discloses as part of a "heat dissipation structure of electronic devices" such as "PDP (plasma display) devices" an "air leak prevention part [**9**][8] that is fitted to … through-hole **8a**, which is formed into a hollow body having, as shown in FIG. 2":

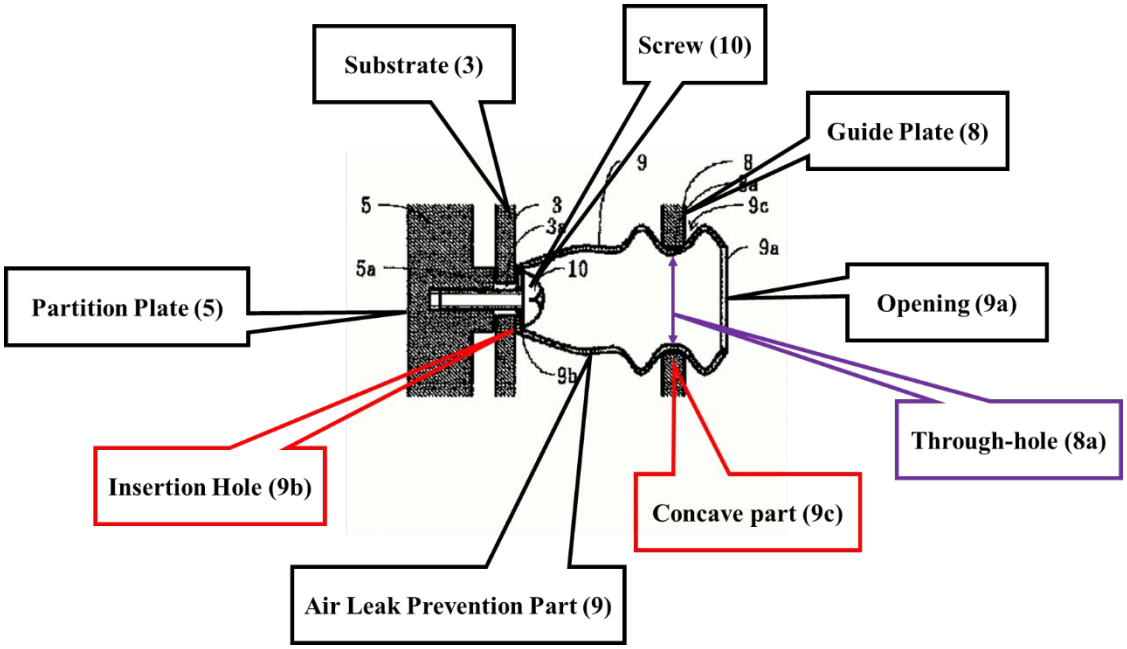

(Ex. 1008, Abstract, ¶¶[0002]-[0003], [0010], FIG. 2.) The air leak prevention part includes "an opening **9a** corresponding to the aforesaid through-hole **8a**; an insertion hole **9b** for insertion of the substrate attachment screw **10** formed in the base thereof;

[8] References to Takashi's patent figures have been bolded.

and a concave part **9c** that fits into the aforesaid through-hole **8a** formed at the peripheral edge of the opening **9a** thereof." (*Id.*, ¶[0010].)

Takahashi discloses that its "heat dissipation structure for electronics" also allows "air leak prevention part **9** [to be] integrally formed with the aforesaid air guide plate **8**, and, as shown in the drawings, a tubular recess **8b** is formed in the air guide plate **8**, thereby forming an opening **8c**, and an insertion hole **8d** is formed in the base of the same recess **8b**":

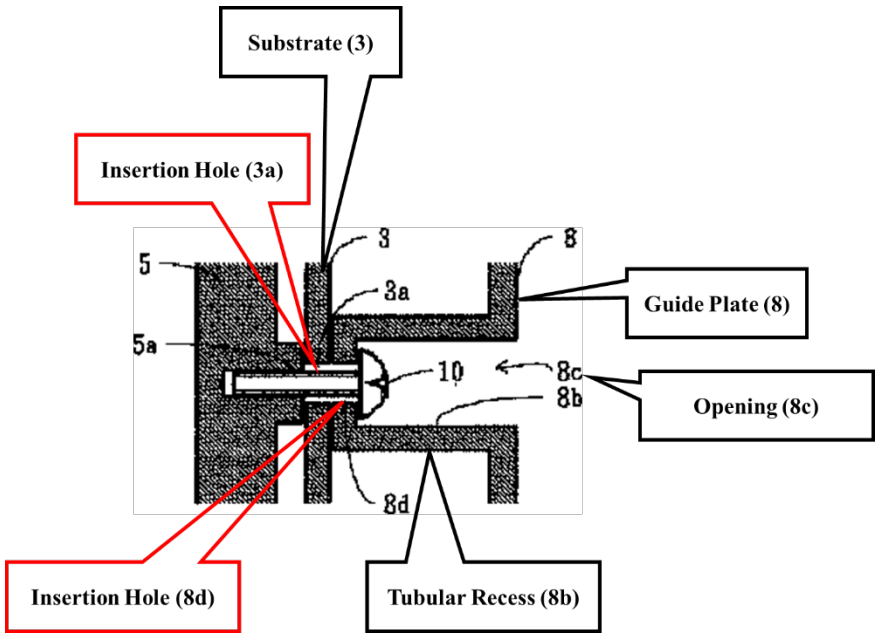

(*Id.*, ¶[0011], FIG. 3 (annotated).)

A POSITA would consider Takahashi's through-hole **8a**, and insertion holes **3a**, **8d,** and **9b** to be "**a plurality of access apertures**," in that each hole allows "**access**" by an individual to service an electrical component associated with an

electronic device such as a plasma display television or LCD, such as those disclosed by Kim and Hong. (Ex. 1002, ¶168.)

Takahashi further discloses that its "air leak prevention part **9** is fitted into the through-hole **8a** provided in the air guide plate **8**, and the screw **10** is inserted through the opening **9a** in this air leak prevention part **9** and threaded through the attachment screw hole **5a** in the partition plate **5** via the insertion hole **9b** and the insertion hole **3a** in the substrate **3**, thereby fastening the substrate **3** to the partition plate **5**." (Ex. 1008, ¶[0012].) Because Takahashi contemplates that a through-hole **8a** can be used to "fasten[] a substrate **3** to a partition plate **5**" (*id.*), it would have been obvious to a POSITA that these through-holes (i.e., "**a plurality of access apertures**"), formed from the combination of Kim and Hong, could also be used through Kim's shield cover **140** to gain access to and service electrical components associated with heat-generating parts such as the LED driver board **133** (which is between the shield cover **140** and the backlight **130** and otherwise obscured). (Ex. 1002, ¶168.)

B. Motivation to Combine Kim and Hong with Takahashi

A POSITA would have been motivated to further combine Kim and Hong with Takahashi. (Ex. 1002, ¶¶170-173.)

A POSITA would have been motivated to use Takahashi's solution of using access apertures (i.e., through-holes) to gain access to hardware components

associated with the backlight unit and/or LCD. (*See* Ex. 1008, Abstract, ¶¶[0003], [0010], [0012]-[0013], FIGs. 2-3; Ex. 1002, ¶171.) Indeed, Takahashi teaches that "in the event of maintenance or inspection, the substrate mounting screw can be removed from the opening in the air leak prevention park without needing to remove the air guide plate." (Ex. 1008, ¶[0014].)

The modification of Kim's shield cover **140** ("**constricted convection plate**") with through-holes like those disclosed by Takahashi to permit servicing of the LED driver circuit board and backlight would have involved the use of one known technique to improve similar devices in the same way, and further would produce predictable results. (Ex. 1002, ¶173.) Takahashi's through-holes would advantageously and predictably further allow access to the LED driver circuit board beneath the shield cover with no change to the function of the shield cover, with a reasonable expectation of success. (*Id.*, ¶172.)

Additionally, Takahashi's disclosure of through-holes for servicing allows Kim's design to maintain a leak-free cooling pathway while improving upon ease of maintenance. (*Id.*) The combination would have constituted the simple use of one known technique, the cooling of a posterior display surface by convection of air within a constricted convection channel, (as reflected by Kim), with a known method of forming deep drawn through-holes in a plate to allow servicing electronic devices associated with display (as disclosed by Takahashi). (*Id.*, ¶173.) A POSITA would

have expected predictable results from the combination to achieve an LCD that was more thermally efficient and more easily serviced. (*Id.*) A POSITA would have had a reasonable expectation of success that the combination of the three complimentary thermal efficiency and servicing techniques would work together as intended. (*Id.*)

XI. GROUND 4: CLAIMS 1, 2, AND 3 ARE OBVIOUS OVER KIM AND TACHIKAWA

A. Independent Claim 1

The combination of Kim and Tachikawa discloses every limitation of Claim 1. (Ex. 1002, ¶¶174-184.) A POSITA would have been motivated to combine Kim with Tachikawa for the same reasons as discussed above with respect to the combination of Kim, Hong, and Tachikawa. (*Supra* §IX.B.)

1. Element 1[pre]

To the extent the preamble is limiting, it is rendered obvious by Kim in combination with Tachikawa. (Ex. 1002, ¶¶175-179.)

Kim discloses "**a system for cooling an electronic display having a posterior display surface and contained within a housing**" for the same reasons discussed above with respect to claims 4 and 7. (*Supra* §VIII.)

2. Element 1[a]

Kim in combination with Tachikawa renders claim 1[a] obvious. (Ex. 1002, ¶¶180-181.)

Kim's "shield cover **140**" is a "**constricted convection plate placed**

posterior to the posterior display surface" (rear-facing surface of backlight unit **130**) as explained above with respect to claim 4[c]. (*Supra* §VIII.A.4.). Kim's "shield cover **140**" covers the majority of the posterior display surface:

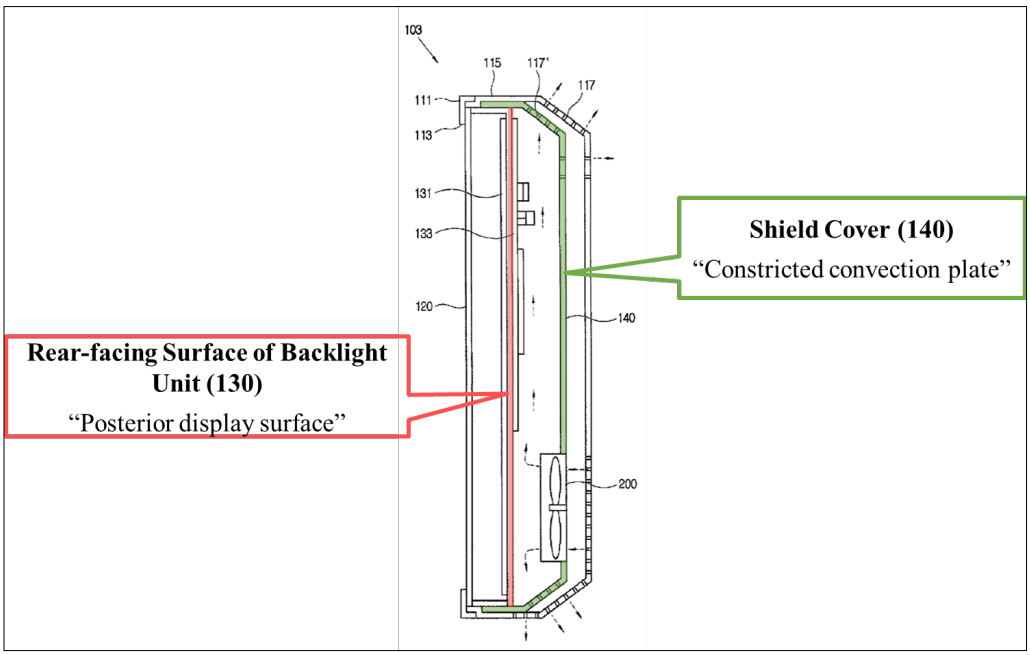

(Ex. 1005, Figs. 2 & 5 (annotated).)

3. Element 1[b]

Kim in combination with Tachikawa renders claim 1[b] obvious for the same reasons discussed above with respect claim 5. (Ex. 1002, ¶182; *supra* §IX.A.)

4. Element 1[c]

Kim in combination with Tachikawa renders claim 1[c] obvious for the same reasons that Kim discloses or renders obvious claim 4[d]. (Ex. 1002, ¶¶183-184; *supra* §VIII.A.5.)

B. Claim 2

Kim in combination with Tachikawa renders claim 2 obvious for the reasons explained above with respect to claim 4[b] in Ground 1. (Ex. 1002, ¶¶185-186; *supra* §VIII.A.3.)

C. Claim 3

Kim in combination with Tachikawa renders claim 3 obvious for the same reasons discussed above with respect to claim 4[c] in Ground 1. (Ex. 1002, ¶187; *supra* §VIII.A.4.)

XII. GROUND 5: NA RENDERS OBVIOUS CLAIMS 4, 8, 9, 10 AND 16

A. Independent Claim 4

Na renders obvious claim 4 of the '322 patent. (Ex. 1002, ¶¶188-210).

1. Element 4[pre]

To the extent the preamble is limiting, it is disclosed or rendered obvious by Na. (*Id.*, ¶¶189-191.)

Na is directed to a "**liquid crystal display (LCD)**." (Ex. 1010, pp.2-4, 6, 8-9, FIGs. 13-14; Ex. 1002, ¶190.)

2. Element 4[a]

Na discloses or renders claim 4[a] obvious. (Ex. 1002, ¶¶192-195.)

Na's Figure 13 illustrates "the liquid crystal display panel **840**", which Na discloses can include "thin film transistor (TFT) substrate **842**, a liquid crystal **844**, a color filter substrate **846**, and a driving module **848**" (i.e., the "**stack**"):

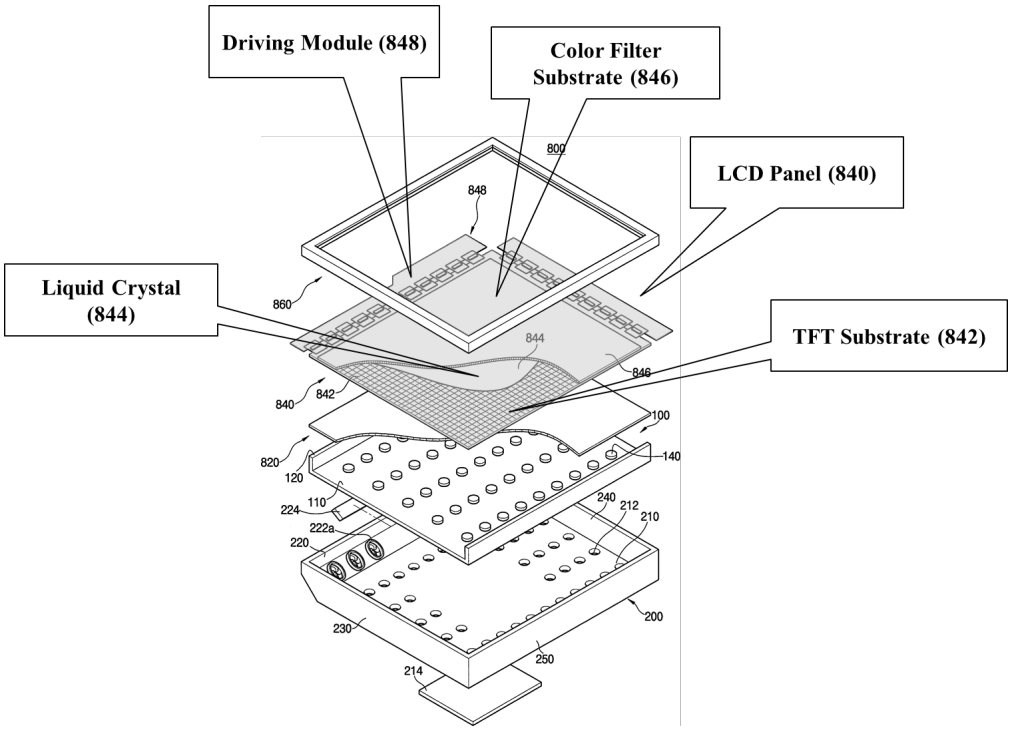

(*Id.*, p.8; FIG. 13 (annotated); Ex. 1002, ¶193.) This is a "**liquid crystal stack**." (Ex. 1002, ¶193.)

Further, if the term "**liquid crystal stack**" is intended to refer to the individual liquid crystal sub-layers (which, when stacked together, collectively form the liquid crystal layer of an LCD panel), a POSITA would know that these liquid crystal sub-layers are necessarily present in a liquid crystal layer of every LCD panel as part of its structure. (Ex. 1002, ¶194.)

3. Element 4[b]

Na discloses or renders claim 4[b] obvious. (Ex. 1002, ¶¶196-203.)

Na discloses "**a backlight assembly behind the liquid crystal stack.**" Na's "backlight unit **500** includes an areal light source device **100** and a storage container

200." (Ex. 1010, p.4.) "The areal light source device **100** includes a reflective plate **110**, a sidewall **120**, a driving substrate **130**, and a plurality of light emitting diode light sources **140**." (*Id.*)

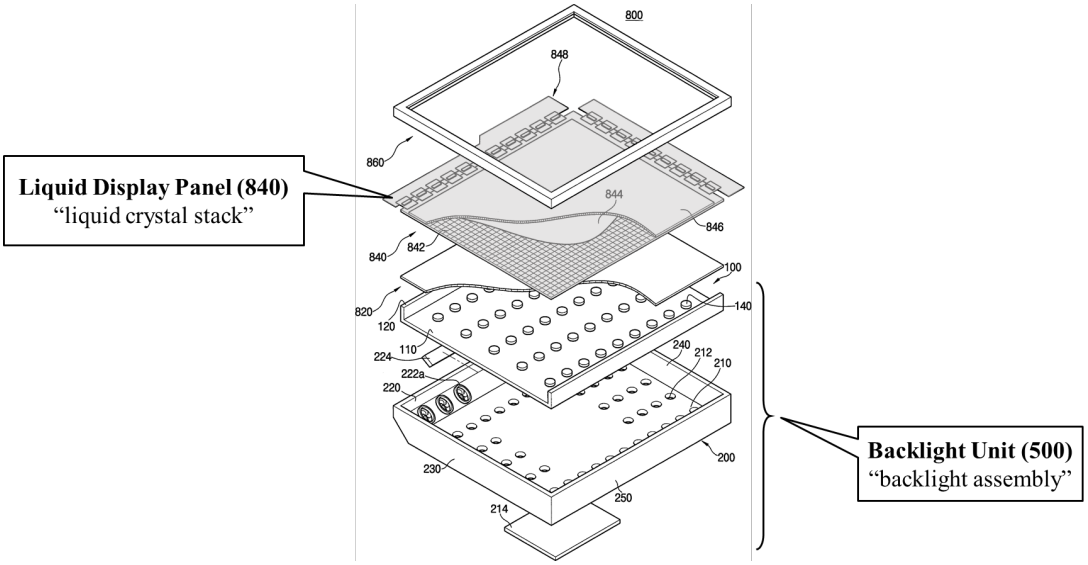

(Ex. 1010, p.8, FIG. 13 (annotated).)

Na discloses that "driving substrate **130** is arranged side by side at the lower part of reflective plate **110**," and "[a] drive power source is applied to the driving substrate **130** to illuminate the light emitting diode light sources **140**." (*Id.*, p.4.) As reflected in Figure 1, "the light emitting diode light sources **140** are arranged in a line on driving substate **130**, pass through coupling holes **112** and are coupled to be positioned on the upper surface of reflective plate **110**":

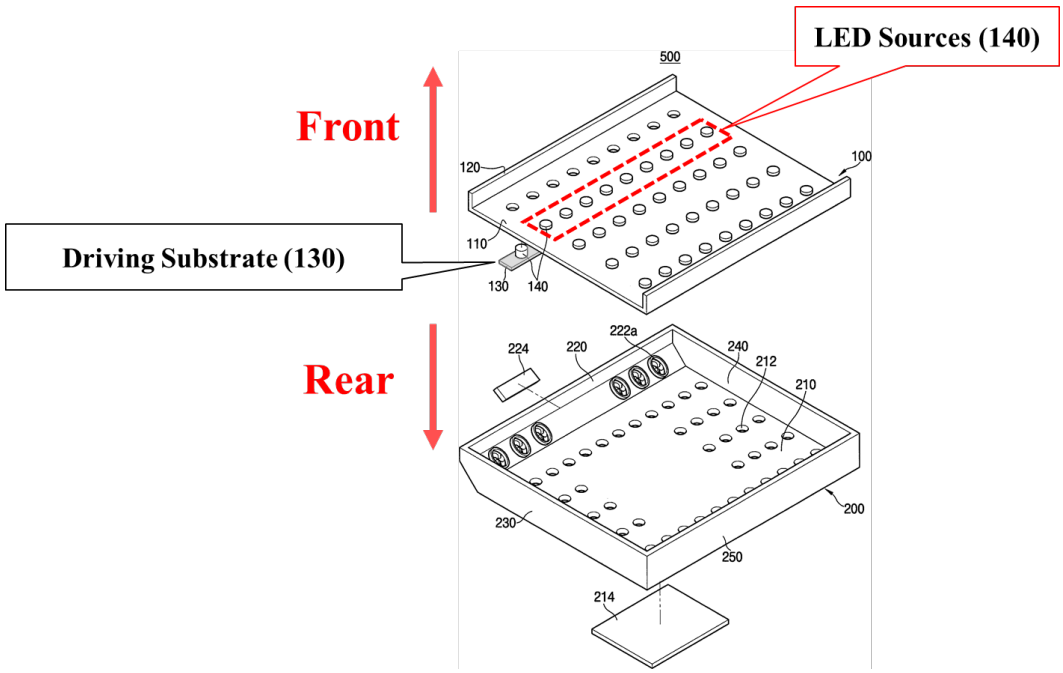

(*Id.*, FIG. 1 (annotated).) In being "arranged in a line on driving substrate **130**," and as illustrated in Figure 2, the plurality of light sources **140** necessarily are "mounted" on the "front side" of driving substrate **130** (the "**PCB**"). (Ex. 1002, ¶200.) Na teaches that the "driving substrate **130** of the areal light source device **100** is driven to generate heat." (Ex. 1010, pp.6-7.) Because it illuminates the light sources **140** and generates heat, a POSITA would have understood Na's driving substrate **130** to be a circuit board. (Ex. 1002, ¶201.) As illustrated in Figure 1, the driving substrate **130** has "**front and back sides**," with LED sources attached to the front side driving substrate **130** immediately beneath (i.e., "**behind**") the LCD panel (the LCD stack). (*Id.*, ¶200; *see* Ex. 1010, FIG. 1.)

Further, because Na's driving substrate **130** is a multifunctional component that performs a variety of tasks (e.g., delivering electrical power to the LEDs and

connecting to other electronic components like driving circuit unit **224** (*see* Ex. 1010, p.4 & Fig. 2), a POSITA would have understood that driving substrate **130** is a printed circuit board ("**PCB**"). (Ex. 1002, ¶201.) Accordingly, Na discloses "**a printed circuit board (PCB) having front and back sides**." (*Id.*)

The "**posterior surface**" in Na corresponds to the outmost surface of the rear side of the portion of driving substrate **130** facing the inner space **260**, which is illustrated in Figure 3 as the space located between the areal light source **100** and the storage container **200** with its bottom plate **210** (labeled in Figures 1 and 2 but not in Figure 3):

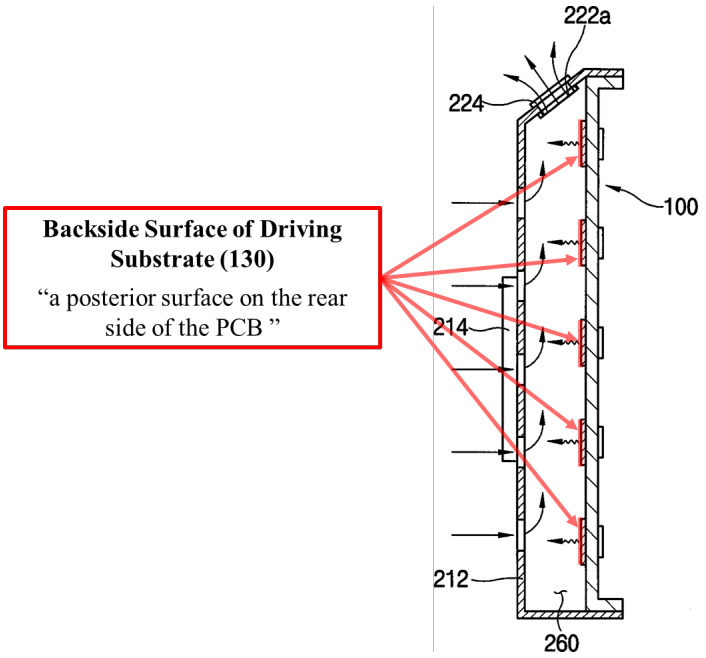

(*Id.*, ¶202; Ex. 1010, pp.4-5 & FIG. 3 (annotated).) The posterior surface of the driving substrate **130** thus faces the bottom plate **210** that is the "**constricted convection plate**." (Ex. 1002, ¶202.)

4. Element 4[c]

Na discloses or renders claim 4[c] obvious. (Ex. 1002, ¶¶204-207.)

As shown in Figures 1 and 3, Na provides storage container **200** which forms a cavity, inner space **260**, through which air is drawn to cool the backlight. (Ex. 1010, p.5; FIG. 1.)

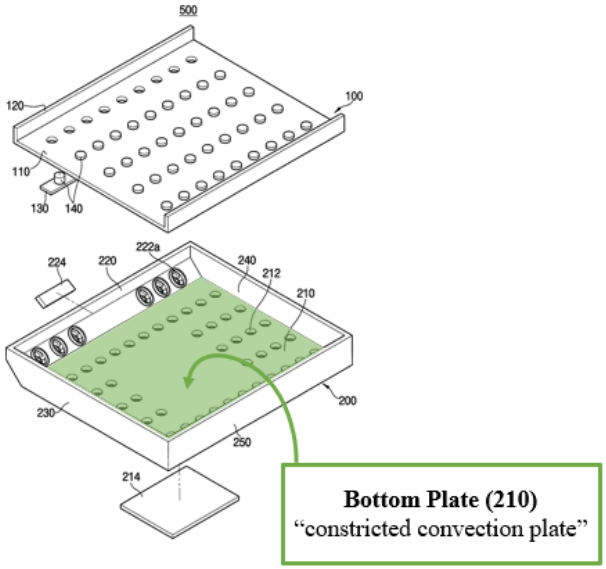

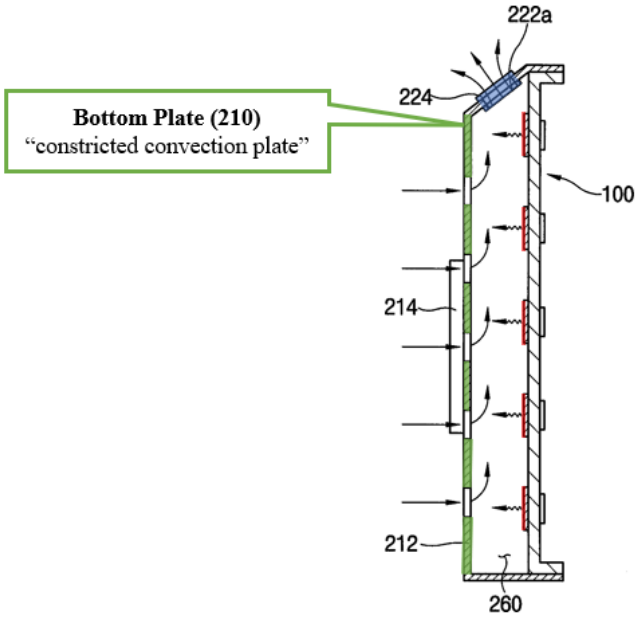

(Ex. 1010, p.4 & FIGs. 1, 3 (annotated).)

Na teaches that the bottom plate **210** ("**constricted convection plate**") "has a rectangular flat plate shape." (Ex. 1010, p.4.) "[A] plurality of fans **222a** are formed on the first sidewall **220**." (*Id.*) These "fans **222a** are operated to flow air from the

inner space to the outside." (*Id.*) Na specifically teaches that "the cooling effect is increased by a free convection phenomenon or a forced convection phenomenon resulting from the operation of the components." (*Id.*, p.5.) Therefore, a POSITA would have understood that bottom plate **210** constricts airflow in order to achieve the desired convective cooling effect and is therefore the claimed "**constricted convection plate**."[9] (Ex. 1002, ¶205.) Further, Na discloses that the through-holes in the bottom plate **210** may be optimized. (Ex. 1010, p.5; Ex. 1002, ¶205.)

Accordingly, and as seen in Figures 1 and 3 above, the "**constricted convection plate**" is "**placed behind and substantially parallel with the posterior surface of the PCB**." (Ex. 1002, ¶206.)

5. Element 4[d]

Na discloses or renders obvious claim 4[d]. (Ex. 1002, ¶¶208-210.)

Na discloses a plurality of fans **222a** formed on the first sidewall **220** that "are

[9] Nothing in the claims or specification suggests that the "**constrictive convection plate**" (e.g., storage container **200**) cannot also be a component of the "**backlight assembly**" and MRI has never argued for such a narrow interpretation during prosecution or the MRI-Civiq Litigation. Rather, the only requirement of the "**constricted convection plate**" is that it be "**placed behind and substantially parallel with the posterior surface of the PCB**" portion of the "**backlight assembly**" which is consistent with the "comprising" language in 4[b]. (Ex. 1001, 3:11-19 ("a backlight assembly … comprising").)

operated to flow air from the inner space to the outside." (Ex. 1010, p.4.) According to Na, the fans also may "function as an intake unit for sucking [i.e. "**drawing"]** external air." (*Id.*, p.6.) Na's fans thus are positioned to pull air from outside of the display and through and out of the inner space **260** (i.e., the space that separates the "constricted convection plate" and "posterior surface") as shown schematically in the cross-sectional view of Figure 3.

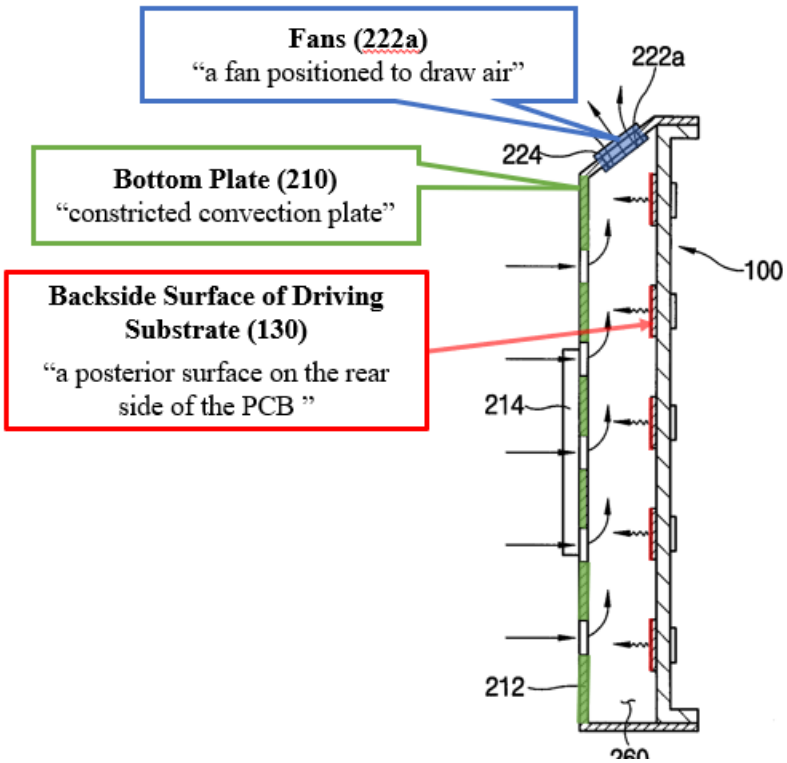

(*Id.*, Figure 3 (annotated).)

B. Claim 8

Na discloses or renders obvious claim 8. (Ex. 1002, ¶211-215.)

Na discloses a **"constricted convection plate"** in the form of "bottom plate **210**." (*Supra* §§XII.A.2.)

As reflected by Figure 1, Na discloses "the bottom plate **210** has a rectangular flat plate shape, and includes a first driving circuit unit **214** and a plurality of through-holes **212**":

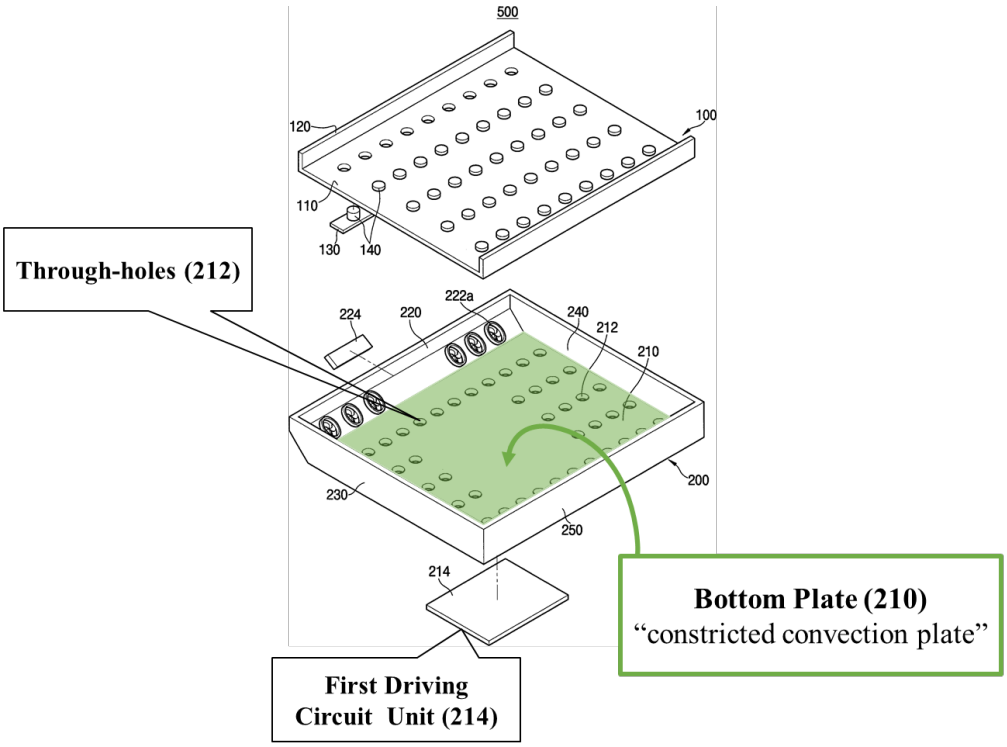

(Ex. 1010, p.4 & FIG. 1 (annotated).) These "through-holes **212** are formed in portions except for the portion where the first driving circuit unit **214** is disposed, and are formed through the bottom plate **210.**" (*Id.*, pp.4-5.) Na discloses that "[a]ir may move through the through-holes **212**," and the through-holes **212** may "function as an intake unit through which external air is sucked." (*Id.*, p.4,)

Inasmuch as these through-holes provide "**access**" "**through the constricted convection plate**," they are to a POSITA, like the example in the specification of the '322 patent discussed above (*supra* §V.B), "**access apertures**." (Ex. 1002,

¶214.) A POSITA would have been motivated to optimize these through-holes by moving or expanding them to serve other purposes, such as servicing electrical components and hardware associated with the backlight unit and/or the LCD, with a reasonable expectation of success. (*Id.*)

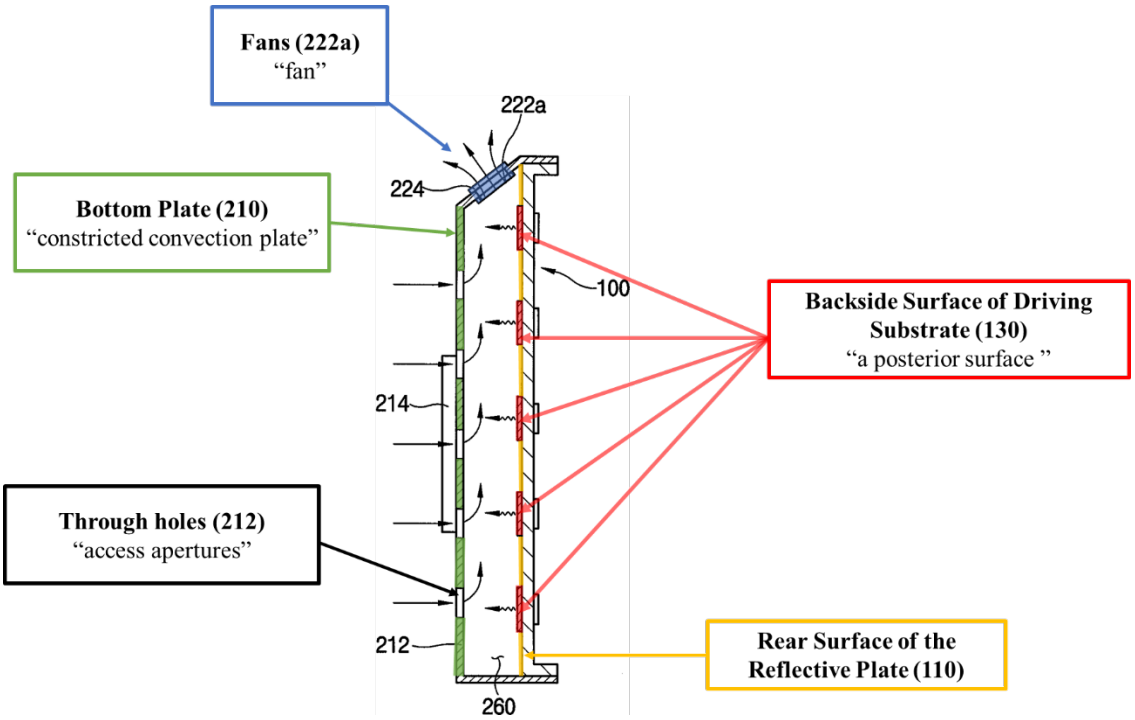

(Ex. 1010, FIG. 3 (annotated).)

C. Independent Claim 9

Na in view of ordinary skill in the art renders obvious claim 9 of the '322 patent. (Ex. 1002, ¶¶216-234).

1. Element 9[pre]

To the extent the preamble is limiting, it is disclosed or rendered obvious by Na. (Ex. 1002, ¶¶217-219).

Na discloses a "**system for cooling an electronic display**" for the reasons discussed with respect to claim 4. (*Supra* §XII.A; Ex. 1002, ¶218.)

2. Element 9[a]

Na discloses or renders obvious claim 9[a]. (Ex. 1002, ¶¶220-223.)

The combination of Na's liquid display panel **840** and areal light source device **100** is an "**electronic display**." (*Supra* §XII.A.1; Ex. 1002, ¶221.) As reflected by Figures 3 and 9, the upper most top surface of the liquid display panel **840** of Na, which is the top surface of color filter substrate **846** (colored blue), corresponds to the claimed "**front display surface**," and the bottom most surface of the areal light source device **100** corresponds to the claimed "**posterior surface of the electronic display**."

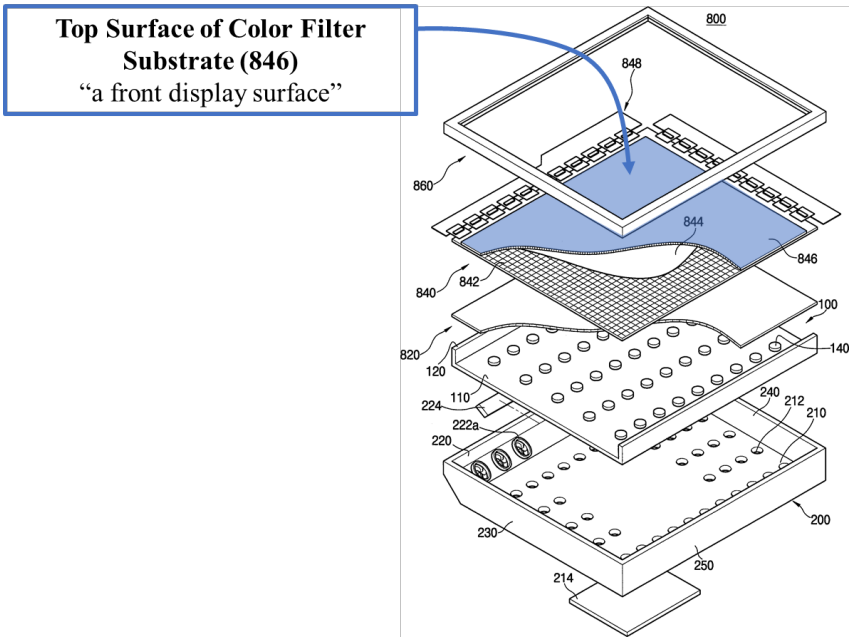

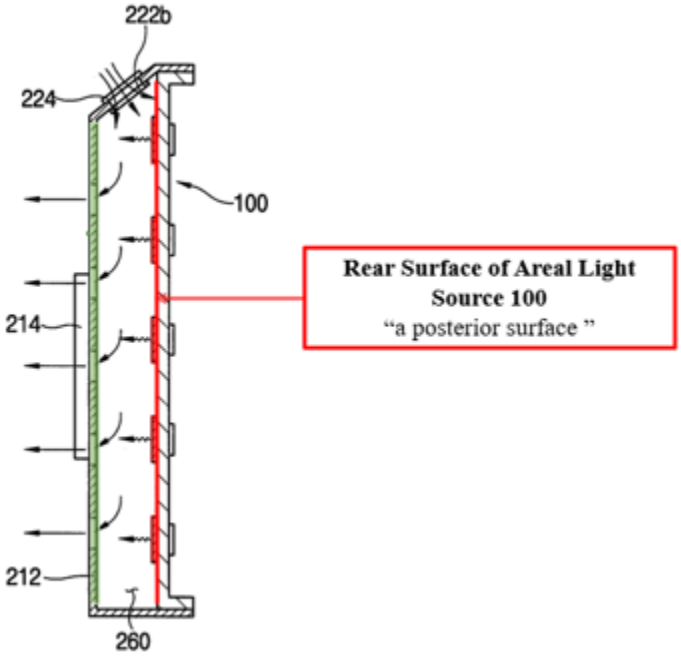

(Ex. 1010, FIGs. 3, 9 (annotated); Ex. 1002, ¶221.) Further, no electronics are mounted to the posterior surface of the areal light source **100**. (Ex. 1002, ¶222.)

3. Element 9[b]

Na discloses or renders obvious claim 9[b]. (Ex. 1002, ¶¶224-227.)

As shown Figure 9, Na's bottom plate **210**[10] ("**constricted convection plate**"; colored green) is "covering a majority of" the rear-facing side of areal light source **100**("the posterior display surface").

[10] In Figure 3, the bottom plate **210** is not labeled while the label for through-holes **212** is misplaced and points to bottom plate **210**. (Ex. 1002, ¶226, n.14.)

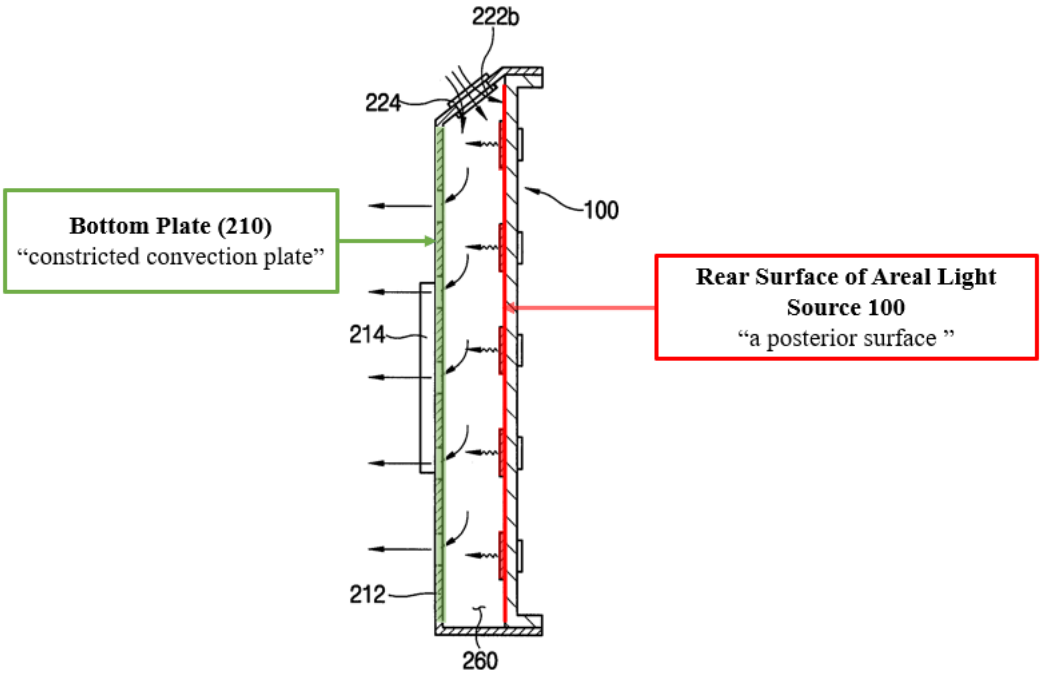

(Ex. 1010, FIG. 9 (annotated); Ex. 1002, ¶226.)

4. Element 9[c]

Na discloses or renders obvious claim 9[c]. (Ex. 1002, ¶228-234.) As discussed above, this is a means-plus-function limitation, in which "forcing air between the constricted convection plate and the posterior surface of the electronic display" is the required function, and in which one or more fans **52**, or refrigeration unit **110**, and their equivalents, is the corresponding structure. (*See* Ex. 1001, 6:65-67; 7:38-54; *see also id.*, 2:67-3:4, 5:50-52, 6:5-7, 6:9-12, 8:52-56, claim 13; Ex. 1002, ¶229.)

With respect to Figure 9, Na discloses that fans **222b** "inject low-temperature external air … into the inner space **260** at high speed." (Ex. 1010, p.6, FIG. 9; Ex. 1002, ¶230.) In other words, the operation of fans **222b** force air between (in the

space that separates) the bottom plate **210** ("**constricted convection plate**") and the rear-facing side of areal light source **100** ("**posterior surface**"):

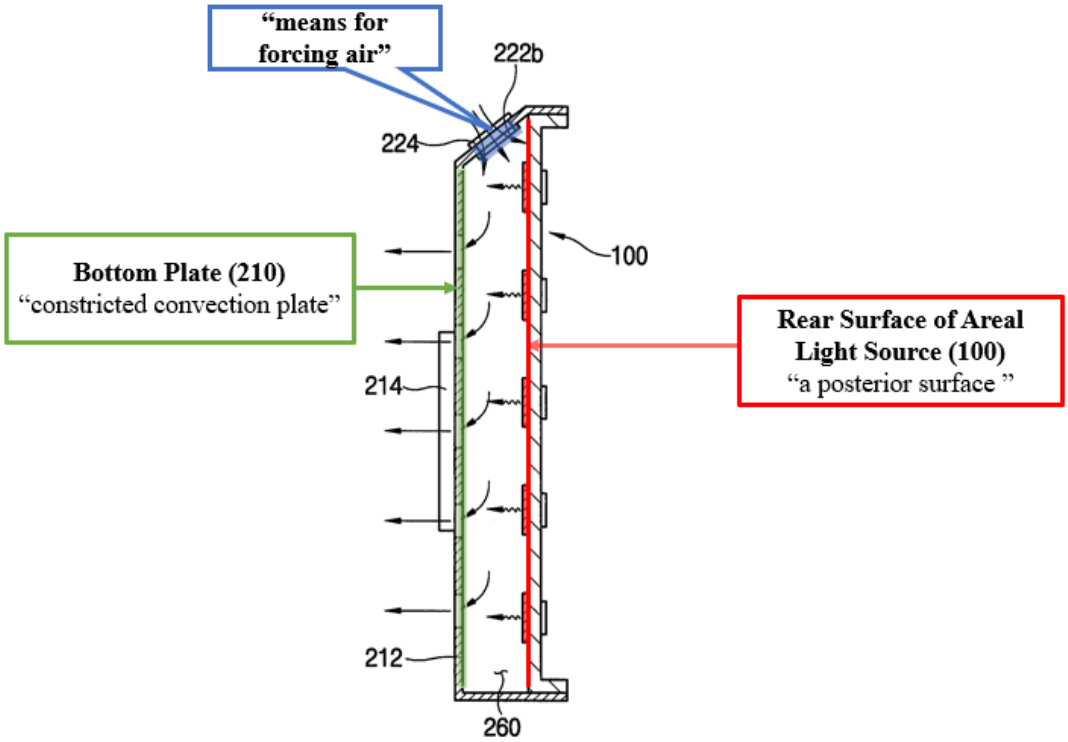

(*Id*., FIG. 9 (annotated); Ex. 1002, ¶231; *cf.* Ex. 1001, Fig. 5C.)

As such, Na's fans **222b** satisfy the "means for forcing" limitation of claim 9[c]. (Ex. 1002, ¶¶232.)

D. Claim 10

Na discloses or renders claim 10 obvious for the reasons discussed above with respect to claim 8. (*Supra* §VII.B; Ex. 1002, ¶235.)

E. Claim 16

Na discloses or renders obvious claim 16. (Ex. 1002, ¶¶236-239.)

Na discloses that "**the electronic display comprises an LED backlight LCD display**" for the reasons discussed with respect to claim 4[pre] and 4[b]. (*Supra* §XII.A.1, XII.A.3; Ex. 1002, ¶237.) As discussed for claim 9[a], the "**posterior surface**" of the "**electronic display**" is the backside surface of areal light source **100**, which is the rear surface of the backlight assembly. (*Supra* §XII.C.2; Ex. 1002, ¶238.)

XIII. GROUND 6: NA IN VIEW OF KIM RENDERS OBVIOUS CLAIMS 7, 12 AND 13

A. Claim 7

Na in view of Kim renders claim 7 obvious. (Ex. 1002, ¶¶239-240.)

Na discloses or renders obvious claim 4 for the reasons explained in Ground 5. As discussed above with respect to claim 7 in Ground 1, Kim discloses or renders obvious the claimed housing. (*Supra* §§XII.A, VII.B; Ex. 1002, ¶¶239-240.)

1. Motivation to Combine Na and Kim

A POSITA would have been motivated to improve Na's "backlight unit and a liquid crystal display [LCD] device" of Na by adding an outer housing, as disclosed by Kim, to enclose Na's "**liquid crystal stack**", "**backlight assembly**", "**constricted convection plate**" and "**fan**." (Ex. 1010, Abstract; Ex. 1002, ¶241.)

Na, like Kim, contemplates an LCD device that "uses the optical characteristics of liquid crystal to display an image," and "has the advantage of being very small in volume and in weight" so as to be "widely used for portable computers,

communication devices, liquid crystal TVs, etc." (Ex. 1010, p.2.) Therefore, it would have been obvious to a POSITA to fully enclose Na's display assembly by adding an external housing using the teachings of Kim. (Ex. 1002, ¶242.)

Both Na and Kim are concerned with efficient cooling of the posterior display surface of an LCD, and both references use cooling mechanisms employing fans, entrances and exits to a cooling channel. (*Id.,* ¶243.) Further, since Na's first and second driving circuits **214** and **224** are exposed to ambient air, it would have been obvious to add an external housing to protect them. (*Id.*) The modification of Na's solution of cooling the rear-facing surface of an LCD by adding an external housing behind bottom plate **210** and enclosing the display, while allowing ambient air to enter the housing and flow between the Na's bottom plate **210** and the posterior surface of driving circuit **130**, as contemplated by Kim's vented housing, would have involved the use of one known technique to improve similar devices in the same way with predictable results. (*Id.*)

A POSITA would have had a reasonable expectation of success from taking advantage not only of Na's cooling system design, but also extending those advantages via Kim's protection and discharge of the heated air to outside the housing. (*Id.*, ¶244) In this configuration, a POSITA would have understood the advantages of not only conveying cooling air through the "inner space **260**" formed between the bottom plate **210** and the rear surface of Na's areal light source **100** (the

"**posterior display surface**") to outside of the sidewalls of the storage container **200**, but also displacing the now heated air outside of the entire display encased by the external housing, as contemplated by Kim. (*Id*.)

B. Claim 12

Na discloses or renders obvious claim 9 for the reasons described in Ground 5. (*Supra* §XII.C; Ex. 1002, ¶249.) The combination of Na and Kim renders obvious claim 12 for the same reasons as explained with respect to nearly identical claim 7. (*Supra* §XIII.A; Ex. 1002, ¶249.)

C. Claim 13

Na in view of Kim renders claim 13 obvious. (Ex. 1002, ¶¶250-254.)

As discussed with respect to claim 9[c] of Ground 5, Na discloses a "**means for forcing air** … " in the form of the form of "plurality of fans **222b**." (*Supra* §XII.C.4; Ex. 1002, ¶251.)

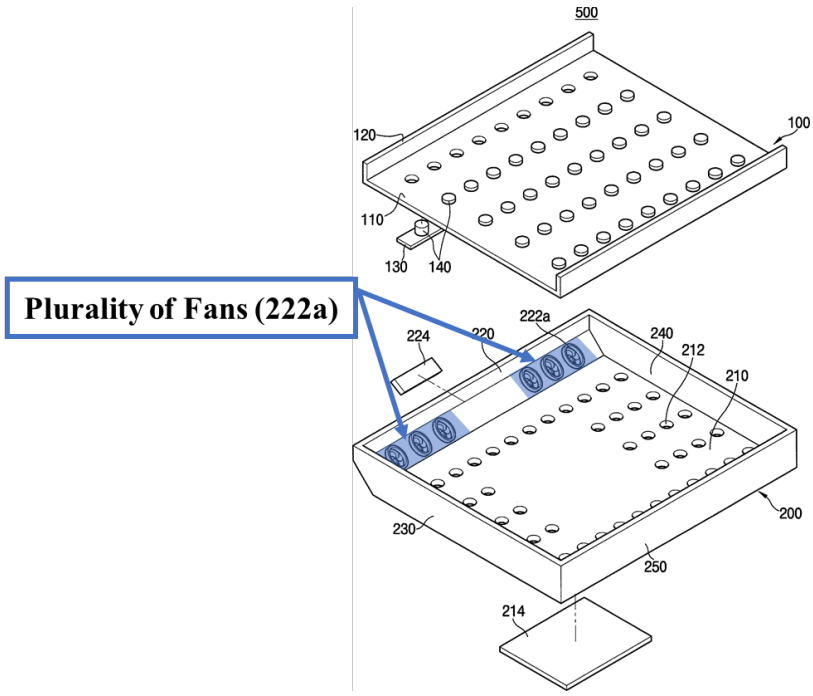

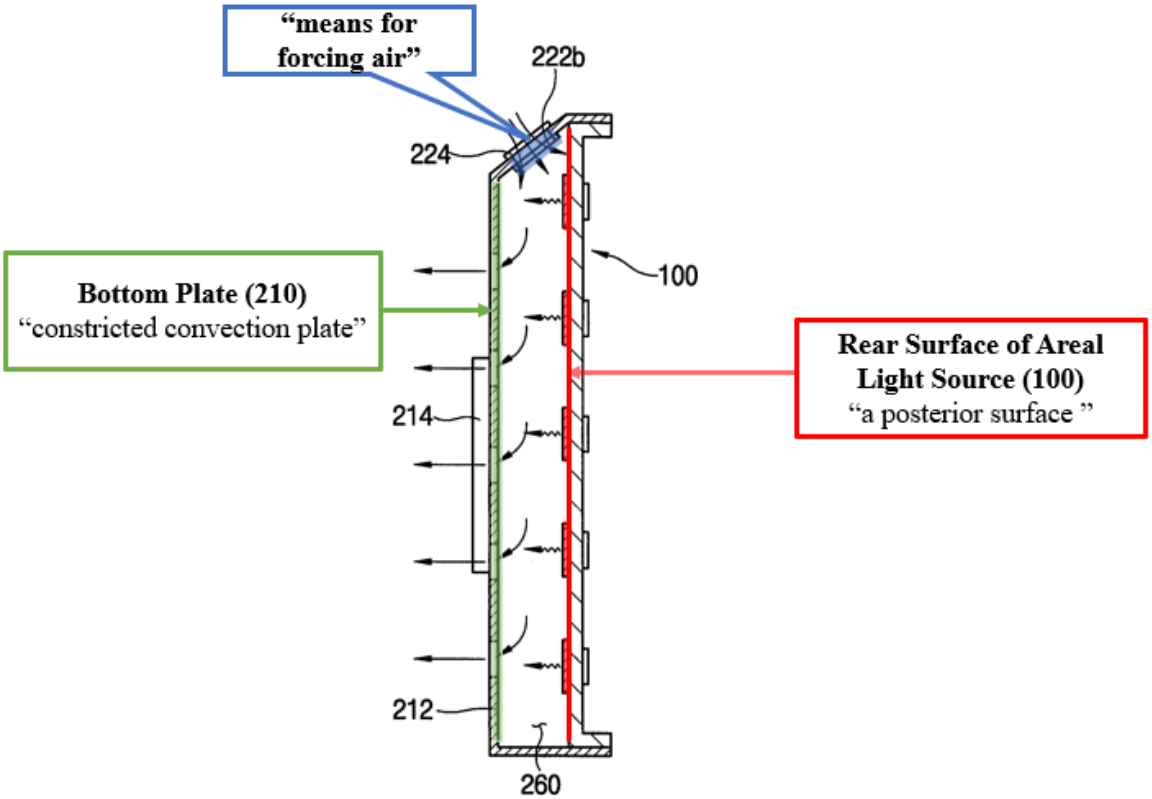

(Ex. 1010, FIGs. 7, 9 (annotated).)

Kim's "**entrance apertures**" ("air slits **117**") are located both in the top and bottom portion of the housing:

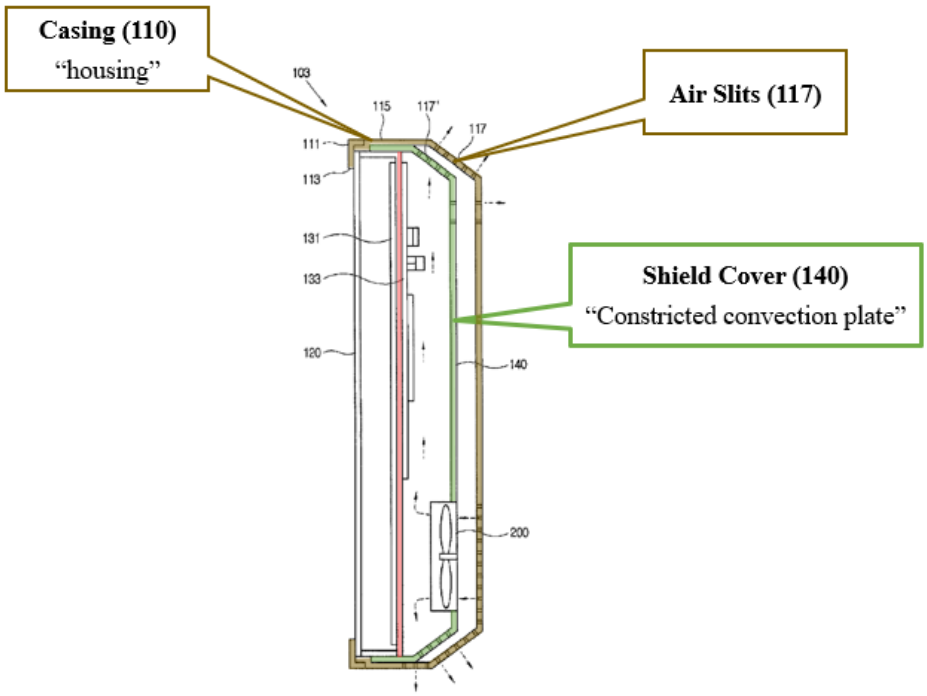

(*Id.*, FIG. 5 (annotated).) In combination with Na, the entrance apertures would be located near Na's plurality of fans, which are located in the upper portion of Na's cooling channel in the embodiment of Figure 7. (Ex. 1002, ¶253.)

XIV. GROUND 7: NA IN VIEW OF TACHIKAWA RENDERS CLAIM 11 OBVIOUS

A. Claim 11

Claim 9 is disclosed or rendered obvious by Na for the reasons discussed above. (*Supra* §XII.C.) Claim 11 is obvious over the combination of Na and Tachikawa. (Ex. 1002, ¶¶255-256.)

As discussed above in connection with the combination of Kim, Hong and

Tachikawa with respect to claim 5 in Ground 2 (*supra* §IX.A), Tachikawa discloses a display "housed in the cabinet **30** in a state of being supported by two brackets **20** on the rear side." (Ex. 1026, ¶[0019].) "Each of the two brackets **20** is connected to a stand member (not shown) which stands substantially perpendicular from an installation surface of the plasma television, thereby supporting substantially the entire plasma television at the predetermined height." (*Id.*) As such, Tachikawa's brackets **20**, along with attachments **50** provide for enhanced mounting stability. (Ex. 1002, ¶256.)

B. Motivation to Combine Na and Tachikawa

A POSITA would have been motivated to combine Na with the brackets disclosed by Tachikawa to improve Na's display stability. (*Id.*, ¶257.) While Na discloses that "the areal light source device **100** is easily coupled to the storage container **200**," (Ex. 1010, p.4), Na does not disclose how its LCD is mounted for use. Na teaches that it "has the advantage of being very small in volume and in weight" so as to be "widely used for portable computers, communication devices, liquid crystal TVs, etc." (Ex. 1010, p.2.) Accordingly, a POSITA would have been motivated to add a stand to Na's device to support it for its intended use.

A POSITA looking to modify Na in this manner would have been motivated to look to other electronic displays that had addressed similar heat removal,

including plasma display panels. (Ex. 1002, ¶259.) Tachikawa provides an example of such a stand and bracket structure.

This adaptation would amount to the use of a known technique to improve similar devices in the same way and would produce predictable results. (*Id*., ¶260.) The addition of Tachikawa's stand and bracket arrangement would provide support to Na's display without compromising its cooling ability. (*Id*.) Indeed, a POSITA would have envisioned, based on the teachings from Tachikawa, that the rear side surface of area light source **100** would be fitted with brackets via a set of attachments to bottom surface **210** and an installation surface. (*Id*., ¶259.)

A POSITA would have been motivated to combine each of these known approaches with no change in their respective functions, and the combination would yield predictable results. (*Id.*, ¶260.)

XV. GROUND 8: KIMURA RENDERS CLAIMS 9, 12, 13, AND 16 OBVIOUS

A. Independent Claim 9

Kimura discloses or renders obvious claim 9 of the '322 patent. (Ex. 1002, ¶¶261-280).

1. Element 9[pre]

To the extent the preamble is limiting, it is disclosed or rendered obvious by Kimura. (*Id.*, ¶¶262-265.)

Kimura discloses "**a system for cooling an electronic display**" having "a cooling fan that can be favorably used in a flat panel display apparatus." (Ex. 1004, ¶[0003].) Kimura also discloses a LCD panel shown in Figure 10, along with the cooling fan **20** and backlight unit **18**:

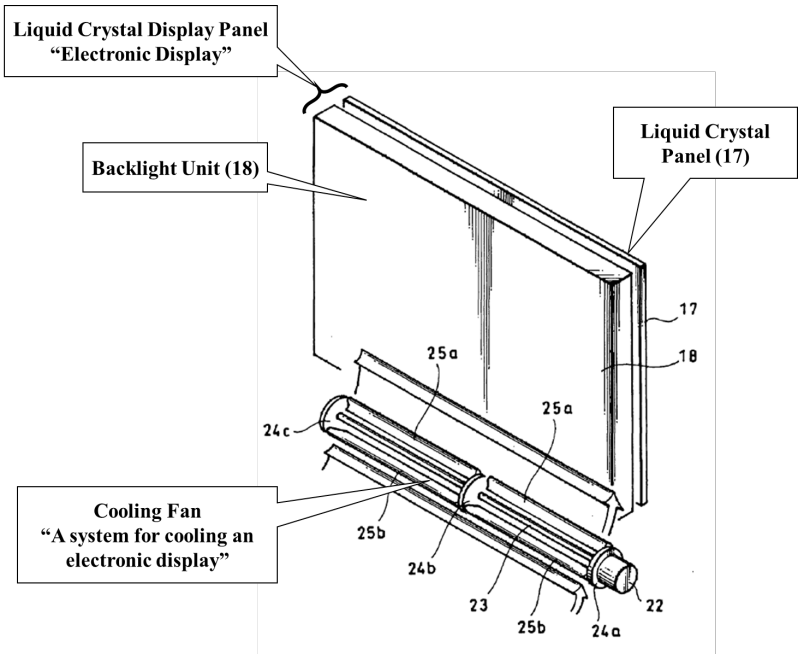

(*Id.*, ¶[0077], FIG. 10 (annotated); Ex. 1002, ¶264.)

2. Element 9[a]

Kimura discloses or renders claim 9[a] obvious. (Ex. 1002, ¶¶266-270.)

As reflected by Figures 9 and 10, Kimura's LCD panel ("**electronic display**") includes "**a front display surface**" (colored blue) and "**a posterior surface**" of the backlight unit **18** (colored light-red):

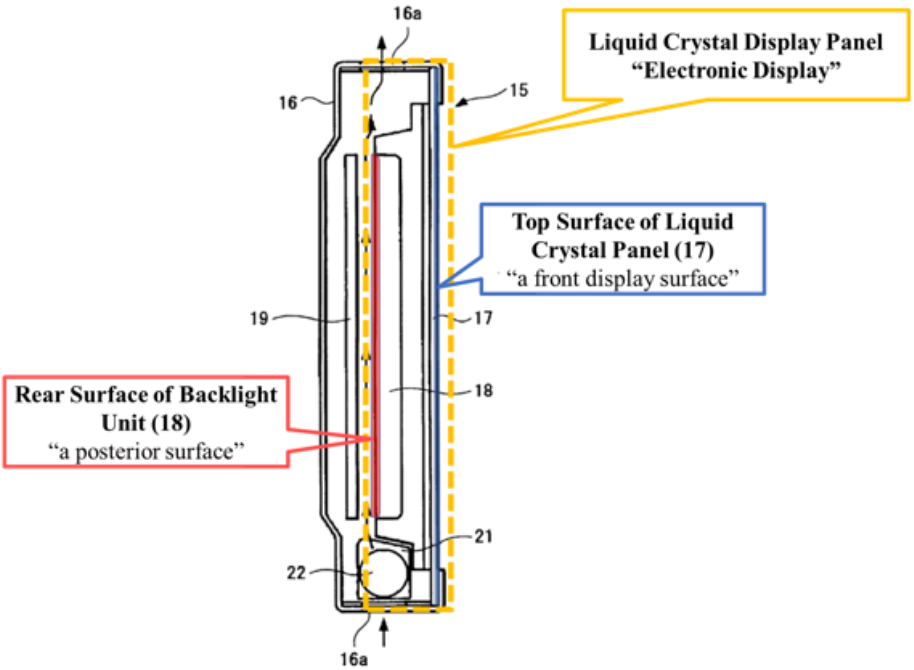

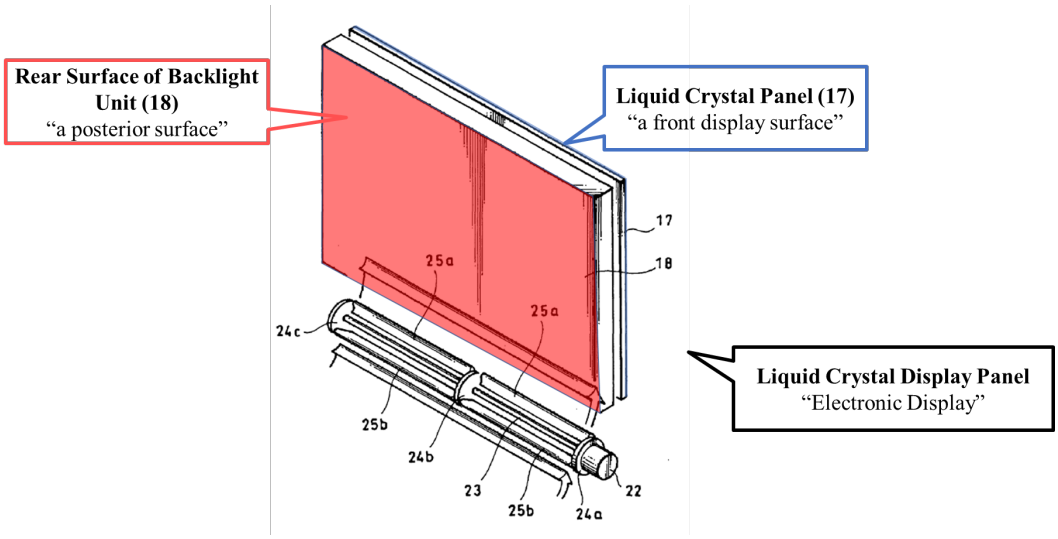

(*Id.*, FIGs. 9-10 (annotated); Ex. 1002, ¶268.) As further shown in the cross-sectional view of Figure 9, "**no electronics are mounted to the posterior surface of the electronic display**"—e.g., on the posterior surface of backlight unit **18**. (Ex. 1004, FIG. 9; Ex. 1002, ¶269.)

3. Element 9[b]

Kimura discloses or renders claim 9[b] obvious. (Ex. 1002, ¶¶271-275.)

Kimura's driving circuit **19** is a "**constricted convection plate**." Kimura explains that the "**entire backlight is cooled uniformly**" because of a "film" of air formed over "the rear surface of the backlight unit **18**" by fan **20**. (*Id*. (emphasis added).) A POSITA would have understand that Kimura's driving circuit **19** is a plate that confines the convective air-flow between the driving circuit **19** and the rear surface of the backlight unit **18**. (Ex. 1002, ¶273.) This is reflected in the arrows shown in (original) Figure 9. In other words, the driving circuit **19** allows the "film" of air to be formed on the posterior surface. Accordingly, it is a "**constricted convection plate**."

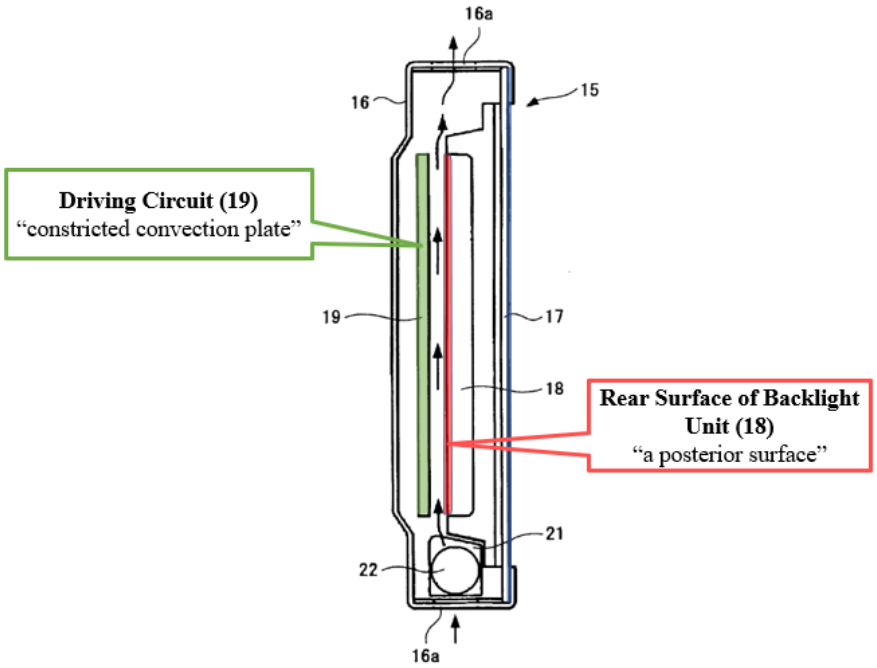

(*Id.*, FIG. 9 (annotated) (arrows in original); Ex. 1002, ¶273.)

Kimura discloses that "driving circuit **19** for the flat panel display is disposed behind the backlight unit **18**" (i.e., "**behind the posterior surface of the display**") (Ex. 1004, ¶¶[0078].)

The air flow design of Kimura allows simultaneous cooling of the backlight unit **18** and the driving circuit **19**, which are the two primary heat generating elements in an LCD. (Ex. 1002, ¶274.) The length of cooling fan **20**, which runs across the entire width of the LCD panel, is indicative of the size of both the driving circuitry **19** and the backlight unit **18**. (*Id*.) Thus, a POSITA would have understood that Kimura's airflow design facilitates a driving circuit **19** that covers "**a majority of the posterior display surface**" without generating overheating issues for the display. (*Id*.) In the alternative, a POSITA would have been motivated to optimize the display cooling capability by enlarging Kimura's "driving circuit **19**" to cover the entire rear surface of the display so that "the entire backlight is cooled uniformly," with a reasonable expectation of success. (Ex. 1004, ¶[0078]; Ex. 1002, ¶274.)

4. Element 9[c]

Kimura discloses or renders claim 9[c] obvious. (Ex. 1002, ¶¶276-280.)

As discussed above, this is a means-plus-function limitation, in which "forcing air between the constricted convection plate and the posterior surface of the electronic display" is the required function, and in which one or more fans **52**, or

refrigeration unit **110**, and their equivalents, is the corresponding structure. (*Supra* §VI.D.)

Kimura discloses a "cooling fan **20**" that is installed inside a gap **21** … that is produced at a lower part of the panel due to the construction of the flat panel display." (Ex. 1004, ¶[0078].) Kimura teaches that the "air is sucked into the cooling fan **20** from an air intake hole **16a** formed in a base surface of the display housing **16** and air supplied to cool the backlight unit **18** is expelled from an expulsion hole **16b** formed in an upper surface of display housing." (*Id.*)

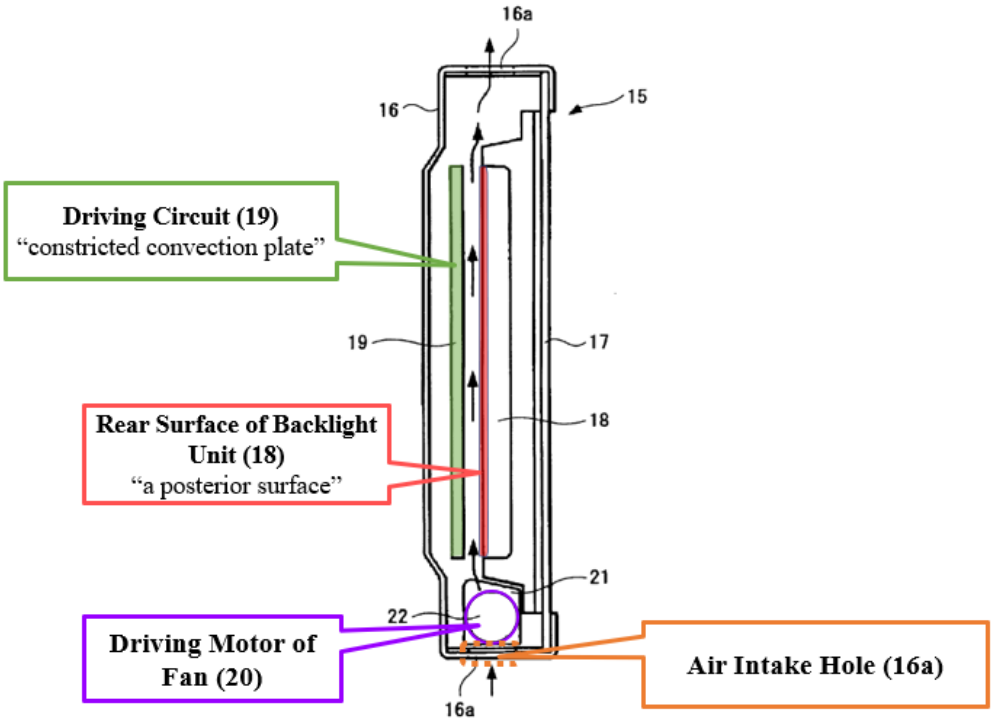

(*Id.*, FIG. 9 (annotated); Ex. 1002, ¶278.)

As such, Kimura's cooling fan **20** is equivalent to fan **52** of the '322 patent and forces air in the space that separates the "**constricted convection plate**" and the

"**posterior surface of the electronic display**" as indicated by arrows in Figure 9 of Kimura. (Ex. 1002, ¶279.)

B. Claim 12

Kimura discloses or renders claim 12 obvious. (Ex. 1002, ¶¶281-289.)

Kimura discloses a display housing **16**, which, as reflected in Figure 9, contains the LCD panel ("**electronic display**"), the driving circuit **19** ("**constricted convection plate**"; colored green), and cooling fan **20** ("**means for forcing air**") as indicated by the cooling fan's driving motor **22** (colored purple).

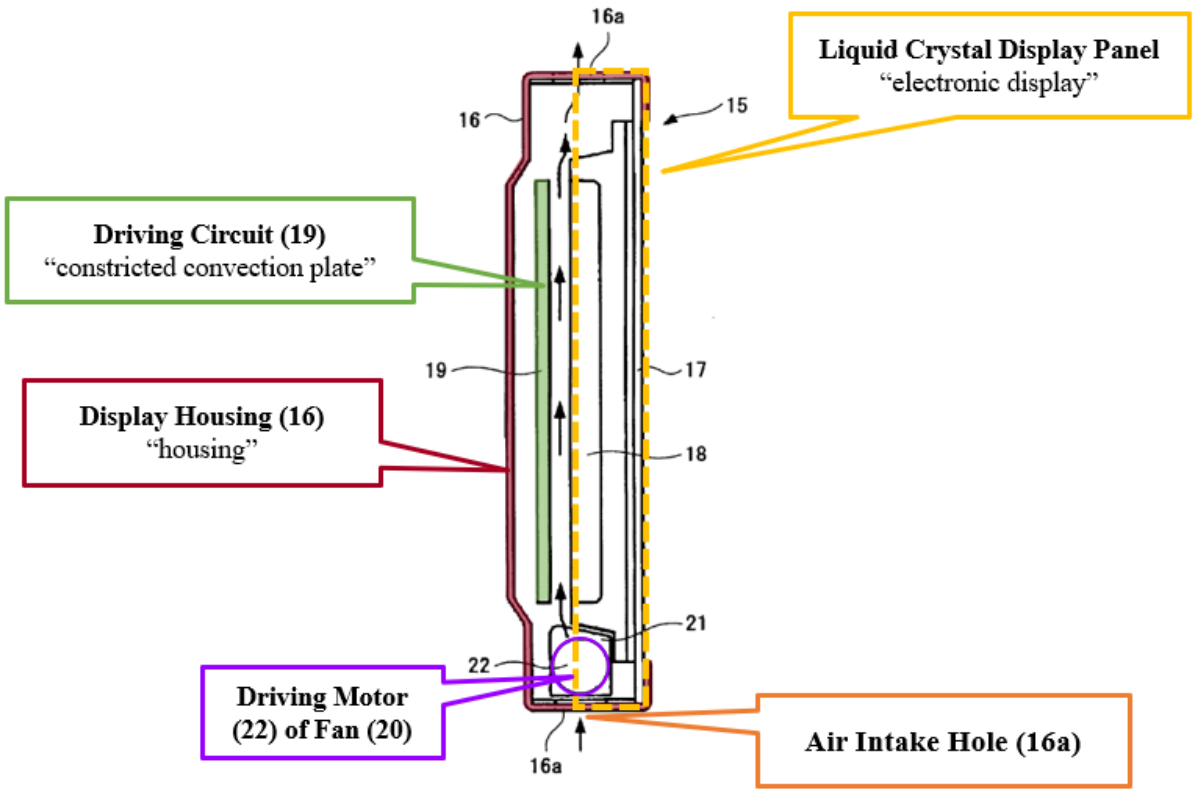

(Ex. 1004, FIG. 10 (annotated); Ex. 1002, ¶284.) Kimura discloses that "air is sucked into the cooling fan **20** from an air intake hole **16a** formed in a base surface

of the display housing **16** and air supplied to cool the backlight unit **18** is expelled from an expulsion hole **16b** formed in an upper surface of the display housing **16**."[11] (Ex. 1004, ¶[0078].) "Air intake hole **16**" is therefore an "**entrance aperture within the housing which permits external ambient air to enter**" the display housing **16** "**and flow between**" driving circuit **19** ("**constricted convection plate**") and the rear surface of backlight unit **18** ("**posterior surface**"). (Ex. 1002, ¶288.)

C. Claim 13

Kimura discloses or renders claim 13 obvious. (*Id.*, ¶¶290-294.)

Kimura discloses "means for forcing air" in the form of fan **20** placed near entrance aperture **16a**. (*Id.*, ¶291.)

[11] A POSITA would have understood that air expulsion hole 16b is mislabeled as 16a at the top of the electronic display. (Ex. 1002, ¶288, n.16.)

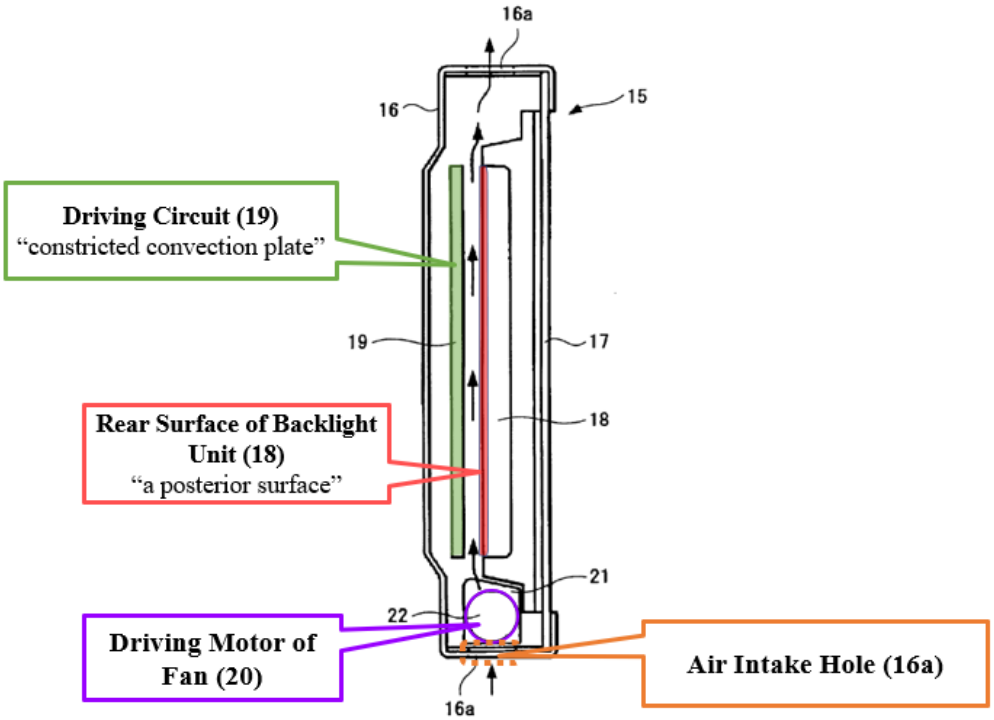

(Ex, 1004, Fig. 9 (annotated); Ex. 1002, ¶291.)

It would have been obvious to the POSITA to replace fan **20** with a plurality of fans. (Ex. 1002, ¶292.) With reference to Figures 10 and 11, Kimura discloses that vanes **25a** and **25b** of cooling fan **20** can be replaced by two or more shorter "vanes" with the addition of support frames **33a**, **33b**, **34a**, **34b**, and **35**. (Ex. 1004, ¶[0088].) In other words, Kimura proposes replacing a single long cooling fan with a plurality of shorter fans having shorter respective vanes. (*Id.*; Ex. 1002, ¶292.)

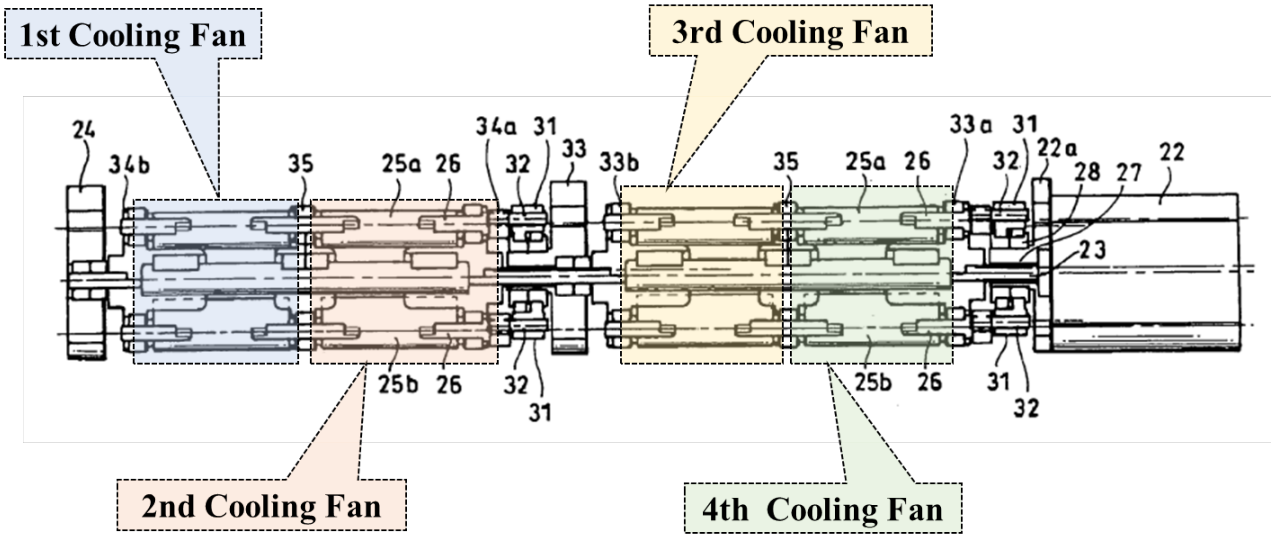

(Ex. 1004, FIG. 11 (annotated); Ex. 1002, ¶292.) Because increasing the length of shaft **23** increases the wind-producing area (*see* Ex. 1004, ¶[0090]), a POSITA would have been motivated to use a plurality of shorter rotating fans for wide displays instead of a single long fan to: (i) "increase the wind-producing area," and (ii) to prevent vane deformation during operation. (Ex. 1002, ¶292.) A POSITA would have had a reasonable expectation of success in optimizing the fan structure to enhance cooling of the display. (*Id*., ¶293)

D. Claim 16

Kimura discloses or renders claim 16 obvious. (Ex. 1002, ¶¶295-297.)

As discussed above with respect to claim 9, Kimura discloses a "**posterior surface**" that is the rear surface of a backlight assembly. (*Supra* §XV.A; Ex. 1002, ¶296.) Kimura discloses that backlight **18** "is composed of LEDs." (Ex. 1004, ¶[0078].)

XVI. GROUND 9: KIMURA IN VIEW OF KOCHIYAMA RENDERS CLAIMS 1, 2, 3 and 11 OBVIOUS

A. Independent Claim 1

The combination of Kimura and Kochiyama renders claim 1 obvious. (Ex. 1002, ¶¶298-316.)

1. Element 1[pre]

To the extent the preamble is limiting, it is disclosed by Kimura in combination with Kochiyama. Kimura discloses or renders obvious "**[a] system for cooling an electronic display having a posterior display surface and contained within a housing**" as explained with respect to claims 9 and 12 in Ground 8. (*Supra* §XV.A, XV.B; Ex. 1002, ¶300.) The combination of Kimura and Kochiyama discloses the preamble for these same reasons.

2. Element 1[a]

Kimura in combination with Kochiyama renders obvious claim 1[a] for the same reasons discussed above with respect to claim 9[b] in Ground 8. (*Supra* §XV.A.3; Ex. 1002, ¶302.)

3. Element 1[b]

Kimura in combination with Kochiyama renders claim 1[b] obvious. (Ex. 1002, ¶¶303-306.)

Kochiyama describes a plasma display device including "a chassis **2** having a heat radiating function [that] holds the PDP **1** on one main surface side and holds

circuit boards **3** required to display a video image (drive-related boards, power supply boards, and the like) on the other main surface side." (Ex. 1028, ¶[0019].) Kochiyama explains that "as illustrated in FIG. 3, each circuit board **3** consists of a board body **3a** and a group of parts **3b** welded to the board body **3a**. The method of fixing the circuit board **3** to the chassis **2** is to fix the circuit board with screws **6** through a chassis support **5**, for example, so that there is a gap **4** between the chassis **2** and the board body **3a**." (*Id.*)

(FIG. 3)¶

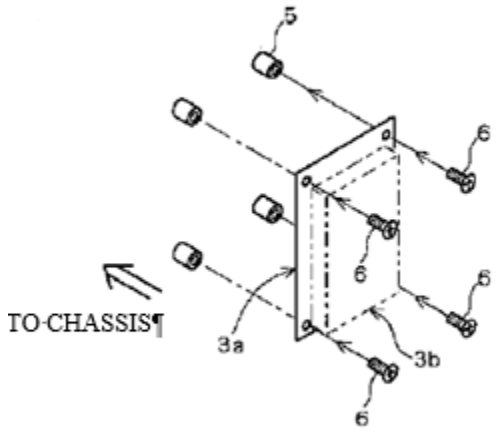

(FIG. 7)¶

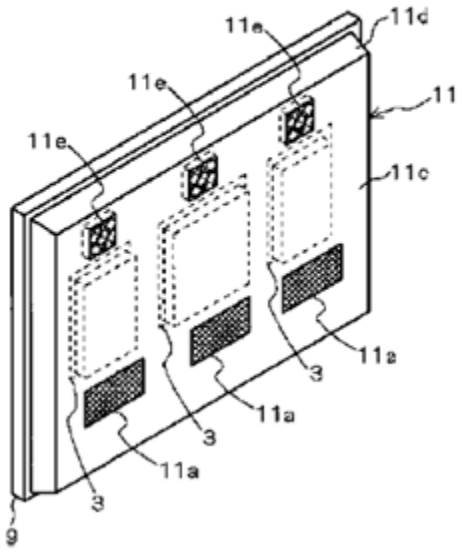

(*Id.*, FIGs 3&7.)

A POSITA would have understood Kochiyama's screw and screw boss to be the claimed "**bracket**." (Ex. 1002, ¶306.) Indeed, the specification of the '322 patent discloses that "[t]he present invention may use various shapes and numbers of mounting brackets **20**. The mounting brackets **20** may serve to attach the

constricted convection plate **30** (shown in FIG. 3) to the display posterior." (Ex. 1001, 6:50-55.)

4. Element 1[c]

Kimura in combination with Kochiyama renders claim 1[c] obvious. (Ex. 1002, ¶¶307-311.)

As discussed above in connection with claim 9[c], Kimura discloses a "cooling fan **20**" that forces ambient air between (in the space that separates) the driving circuit 19 and the posterior surface of the display. (Ex. 1004, ¶[0078]; s*upra* §XV.A.4.) Kimura teaches that while "it is assumed that the vanes are rotationally driven in the clockwise direction," they may also be driven in other directions. (Ex. 1004, ¶[0055].) Accordingly, a POSITA would have understood that the airflow in Kimura's embodiments could be reversed so as to be positioned to pull air through expulsion hole **16b** and out of the space that separates the driving circuit ("**constricted convection plate**") and the "**rear posterior**" via air intake hole **16a,** with a reasonable expectation of success. (Ex. 1002, ¶309.)

For example, Kochiyama teaches the use of cooling fans both to force air into, and draw air out of, a display. (*Id.*, ¶310.) With respect to Figures 7 and 8, Kochiyama discloses "exhaust holes **11e** with fans" located in the upper part of back cover **3**. (*Id.* ¶¶[0028]-[0029].) These fans draw air out of the display. (Ex. 1002, ¶310.) With respect to Figures 9 and 10, Kochiyama discloses "suction holes 11f

with fans" where the "suction holes 11f are provided at the lower part of the back cover 11." (Ex. 1028, ¶¶[0031]-[0032].) These fans force air into the display. (Ex. 1002, ¶310.) Kochiyama teaches that these fans "further enhance[] the cooling effect because air can be blown directly onto the chassis **2** and the circuit boards **3**." (*Id.*, ¶[0032].)

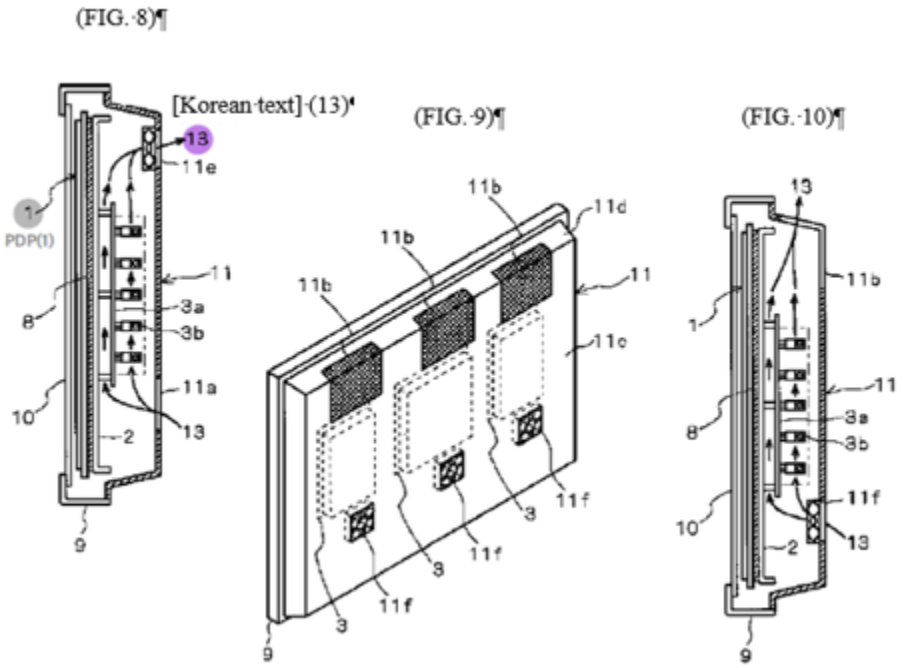

(*Id.*, FIGs. 8-10.)

5. Motivation to Combine Kimura and Kochiyama

A POSITA would have been motivated to improve Kimura's display by adding the brackets disclosed by Kochiyama to improve Kimura's device without impacting airflow. (Ex. 1002, ¶312.) Kimura does not expressly disclose how the "posterior display surface" is connected to the "driving circuit **19**" ("constricted convection plate"). A POSITA would have looked to improve the stability of

Kimura's driving circuit by attaching it to the rear surface of the backlight through the use of standard connection options, such as brackets. (*Id.*) The POSITA would have been motivated to look to other electronic displays that had addressed similar heat removal issues. (*Supra* §XIV.B; Ex. 1002, ¶312.) As such, the POSITA would have recognized the similarities between Kimura's LCD and Kochiyama's PDP cooling arrangements. (Ex. 1002, ¶313.)

A POSITA would have been motivated to add Kochiyama's bracket to Kimura's display to connect the rear surface of the backlight and driving circuit. (*Id.*, ¶314.) A POSITA would have understood this modification to improve the Kimura display's stability while permitting easy attachment and disassembly of Kimura's driving circuit. (*Id.*) This addition and modification would merely involve the use of one well-known technique (Kochiyama's connection brackets) to improve Kimura's similar device in the same way, and would produce predictable results without interfering with Kimura's cooling method. (*Id.*) Accordingly, the POSITA would have had a reasonable expectation of success. (*Id*, ¶315.)

B. Claim 2

Kimura in combination with Kochiyama renders claim 2 obvious for the same reasons discussed with respect to claim 16 in Ground 8. (*Supra* §XV.D, Ex. 1002, ¶318.)

C. Claim 3

Kimura in combination with Kochiyama renders claim 3 obvious. (Ex. 1002, ¶¶320-322.)

As show in annotated Figure 9, Kimura's driving circuit ("**constricted convection plat**e") is "**substantially parallel**" to the "**posterior display surface**":

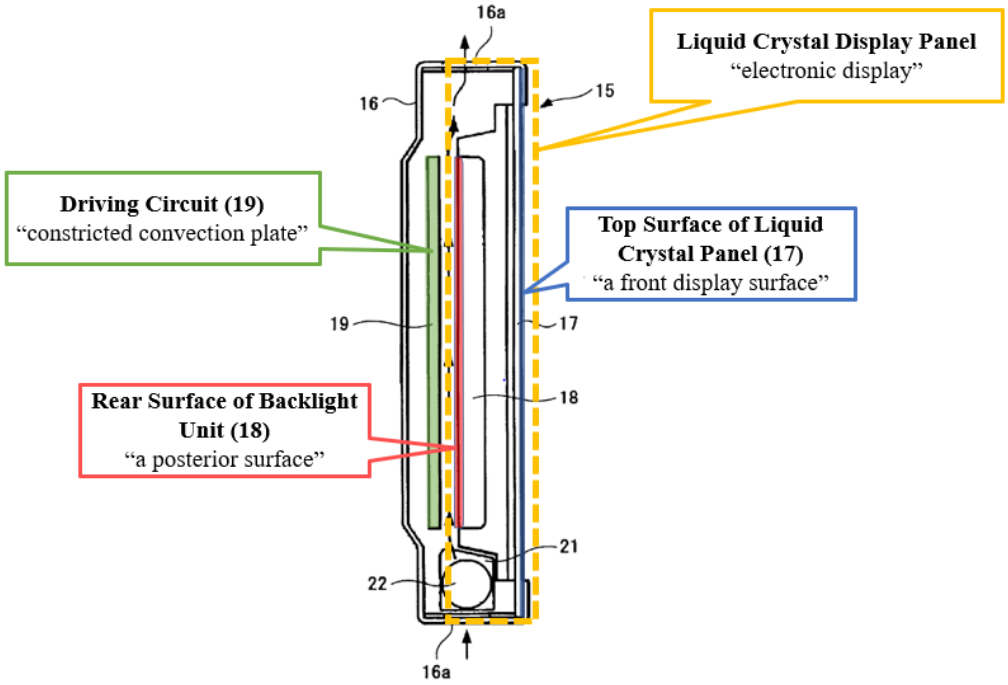

(Ex. 1004, FIG. 9 (annotated); Ex. 1002, ¶321.)

D. Claim 11

Kimura in view of Kochiyama renders claim 11 obvious for the same reasons discussed with respect to claim 1[b]. (*Supra* §XVI.A.3; Ex. 1002, ¶323.)

XVII. GROUND 10: CLAIMS 4 AND 7 ARE OBVIOUS OVER KIMURA IN VIEW OF HONG

A. Independent Claim 4

Kimura in combination with Hong renders claim 4 obvious. (Ex. 1002, ¶¶324-342.)

1. Element 4[pre]

To the extent the preamble is limiting, it is disclosed by Kimura in combination with Hong. (*Id*., ¶¶325-327.) Kimura discloses "a liquid crystal display panel." (Ex. 1004, ¶[0077]; Ex. 1002, ¶326.)

2. Element 4[a]

Kimura in combination with Hong renders claim 4[a] obvious. (Ex. 1002, ¶¶328-331.) Kimura discloses "liquid crystal panel **17**." (Ex. 1004, ¶[0078].) A POSITA would understand that liquid crystal panel includes a "**liquid crystal stack**." (Ex. 1002, ¶329.)

Further, if "**liquid crystal stack**" is intended to refer to the individual liquid crystal sub-layers (which, when stacked together, collectively form the liquid crystal layer of an LCD panel), a POSITA would know that these liquid crystal sub-layers are necessarily present in a liquid crystal layer of every LCD panel as part of its structure. (*Id*., ¶330.)

3. Element 4[b]

Kimura in combination with Hong renders claim 4[b] obvious. (Ex. 1002, ¶¶332-336.)

Kimura discloses "[a] backlight unit **18** that is a light source of the liquid crystal panel **17** and is composed of LEDs or the like is disposed behind the liquid crystal display panel **17**." (Ex. 1004, ¶[0078].)

Hong is an example of a typical LCD backlight structure. (Ex. 1002, ¶335.) Hong discloses a "**printed circuit board (PCB) having front and back sides, a plurality of LEDs mounted on the front side of the PCB, a posterior surface on the rear side of the PCB**," for the same reasons as discussed above with respect the combination of Kim and Hong in Ground 1. (*Supra* §VIII.A.3.).

4. Element 4[c]

Kimura in combination with Hong renders claim 4[c] obvious. (Ex. 1002, ¶¶337-339.) Kimura discloses the "**constricted convection plate**" for the same reasons discussed with respect to claim 9[b] in Ground 8. (*Supra* §XV.A.3.) In combination with Hong, the "driving circuit **19**" ("**constricted convection plate**") is also placed behind and "**substantially parallel with the posterior surface of the PCB**." (Exs. 1002, ¶338; 1011, p.2; 1012, p.14.)

5. Element 4[d]

Kimura in combination with Hong renders claim 4[d] obvious. Kimura discloses or renders obvious this limitation for the same reasons discussed in Ground

9 with respect to claim element 1[c]. (*Supra* §XVI.A.4; Ex. 1002, ¶341.) The combination of Kimura and Hong render this limitation obvious for the same reasons. (*Id.*)

6. Motivation To Combine Kimura and Hong

A POSITA would have been motivated to incorporate Hong's PCB into Kimura's LED backlight for the same reasons as discussed above with respect to the combination of Kim and Hong in Ground 1. (*Supra* §VII.A.6.) A POSITA would have known that PCBs are an integral and commonly used part of an LED backlight unit in an LCD device. (Ex. 1002, ¶343.) In other words, a POSITA would have known that Kimura's LEDs need to be mounted on a first side of a PCB within backlight unit **18** in order to operate as intended. (*Id.*)

Hong provides an example of a typical LED backlight. A POSITA would have been motivated to utilize a PCB such as that disclosed by Hong in Kimura's backlight. (*Id.*, ¶344.) The combination would have amounted to no more than the use of a known technique (LEDs mounted on narrow PCBs) to improve Kimura's backlight to obtain predictable results. Accordingly, the POSITA would have had a reasonable expectation of success. (*Id.*)

B. Claim 7

Kimura in combination with Hong renders claim 7 obvious. (Ex. 1002, ¶345.) Kimura discloses or renders this limitation obvious for the same reasons discussed

in Ground 8 with respect to claim element 12. (*Supra* §XV.B; Ex. 1002, ¶345.) The combination of Kimura and Hong render this limitation obvious for the same reasons. (*Id*.)

XVIII. GROUND 11: CLAIM 5 IS OBVIOUS KIMURA IN VIEW OF HONG AND KOCHIYAMA

A. Claim 5

Kimura in view of Hong and Kochiyama renders claim 5 obvious. (Ex. 1002, ¶¶346-347.) As discussed above with respect to claim 1[b] in Ground 9, the combination of Kimura and Kochiyama render obvious "**at least one bracket which connects the posterior surface with the constricted convection plate**." (*Supra* §XVI.A.3.) Claim 5 is obvious over Kimura, Hong, and Kochiyama for these same reasons. (Ex. 1002, ¶347.)

XIX. GROUND 12: CHO RENDERS CLAIMS 4, 5, 9, 10 AND 11 OBVIOUS

A. Independent Claim 4

Cho renders obvious each limitation of Claim 4. (Ex. 1002, ¶¶348-384.)

1. Element 4[pre]

To the extent the preamble is limiting, it is disclosed or rendered obvious by Cho. (*Id.,* ¶¶349-351.)

Cho discloses "liquid crystal display device 1":

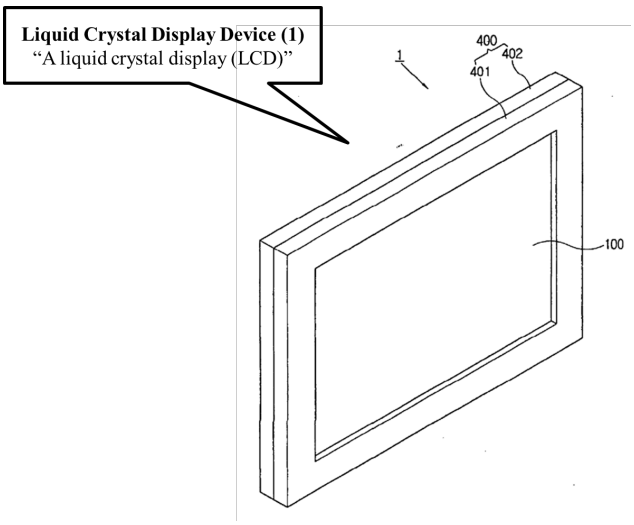

(Ex. 1006, FIG. 1 (annotated); ¶[0031].)

2. Element 4[a]

Cho discloses or renders claim 4(a) obvious. (Ex. 1002, ¶¶352-356.)

Cho discloses "a liquid crystal display panel" that is a "**liquid crystal stack**," and includes "a liquid crystal layer **141** disposed between a color filter substrate **121** and a thin film transistor substrate **111** in a space defined by [a] sealant **131**. (*Id.*, ¶[0032]; Ex. 1002, ¶¶353-354.)

Further, if "**liquid crystal stack**" is intended to refer to the individual liquid crystal sub-layers (which, when stacked together, collectively form the liquid crystal layer of an LCD panel), a POSITA would know that these liquid crystal sub-layers are necessarily present in a liquid crystal layer of every LCD panel as part of its structure. (Ex. 1002, ¶355.)

3. Element 4[b]

Cho discloses or renders claim 4[b] obvious. (Ex. 1002, ¶¶357-360.)

Cho discloses backlight unit **300** placed behind the LCD panel **100** (*i.e.* "the liquid crystal stack"):

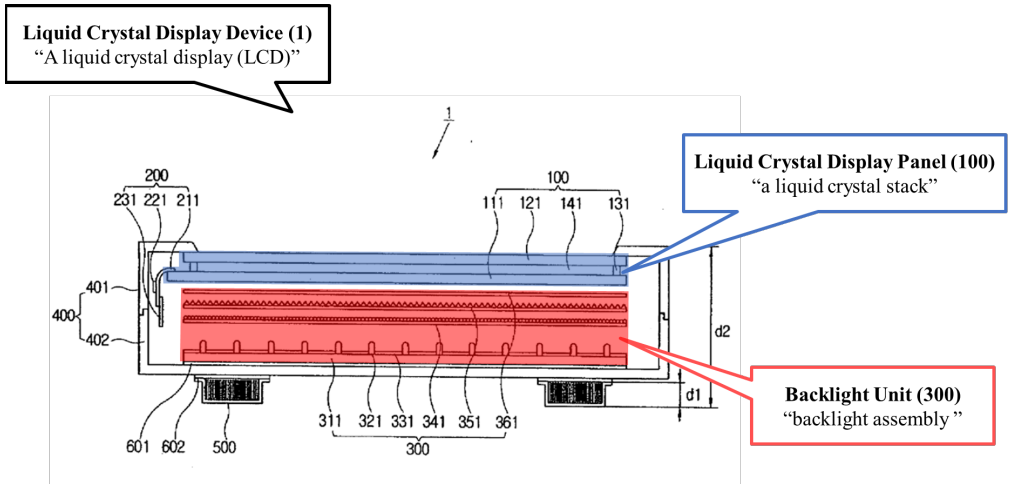

(*Id.*, FIG. 2 (annotated).) Backlight unit **300** is an "**assembly**" of elements including LED circuit substrate **311** "disposed parallel to the liquid crystal panel." (*Id.*, ¶[0034]; Ex. 1002, ¶359.) LED circuit substrate **311** "drives the LED **321**, and at a same time, transfers heat generated by the LED **321** to the cooling apparatus **500**." (Ex. 1006, ¶[0035].) A POSITA would have understood a "circuit substrate" to be a "**printed circuit board**" because (i) both phrases use the term "**circuit**" to describe the electrical circuits formed on the board, and (ii) the word "**board**" is a colloquial short-hand for "substrate," where a "**circuit board**" and "circuit substrate" each support multiple layers of conductor pathways and dielectric layers, and (iii) the "**printed**" descriptor is a term of art that describes a method of fabricating the circuit traces. (Ex. 1002, ¶362.)

As shown in Figure 2 below, LED circuit substrate **311** has a "**front side**" on which "**a plurality of LEDs [321] are mounted**" and a "**back side**" opposite to the "front side."

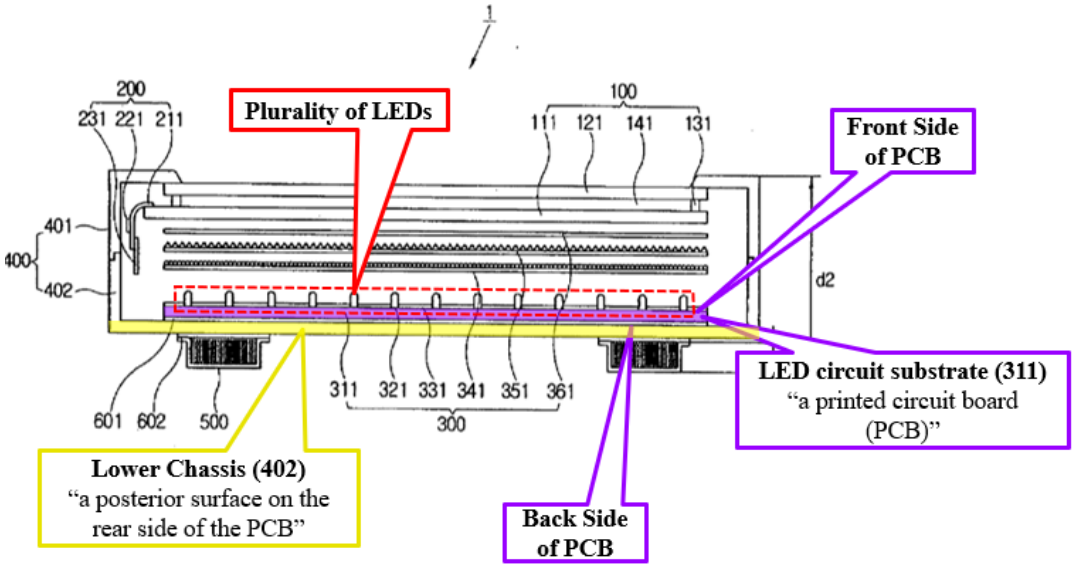

(Ex. 1006, FIG. 2 (annotated); Ex. 1002, ¶363.)

Cho discloses chassis **400**, including upper chassis **401** and lower chassis **402** on the rear/back side of LED circuit substrate **311**. (Ex. 1006, ¶[0042].) Because lower chassis **402** is disposed on the back side of the LED circuit substrate **311**, it is disposed on "the rear side" of the LED circuit substrate **311**, and is thus "**a posterior surface on the rear side of the PCB**." (Ex. 1002, ¶¶371-372.)

4. Element 4[c]

Cho discloses or renders claim 4[c] obvious. (Ex. 1002, ¶¶374-378.)

Cho further discloses a cooling apparatus **500** "disposed at an exterior surface of the chassis **400**." (Ex. 1006, ¶[0031])

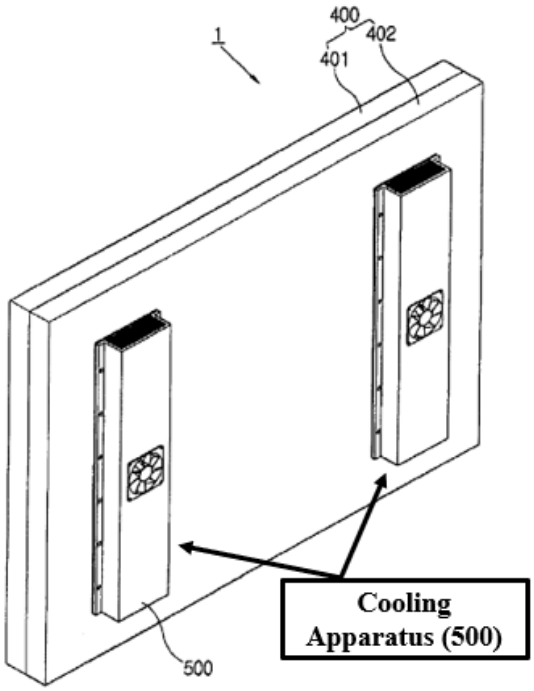

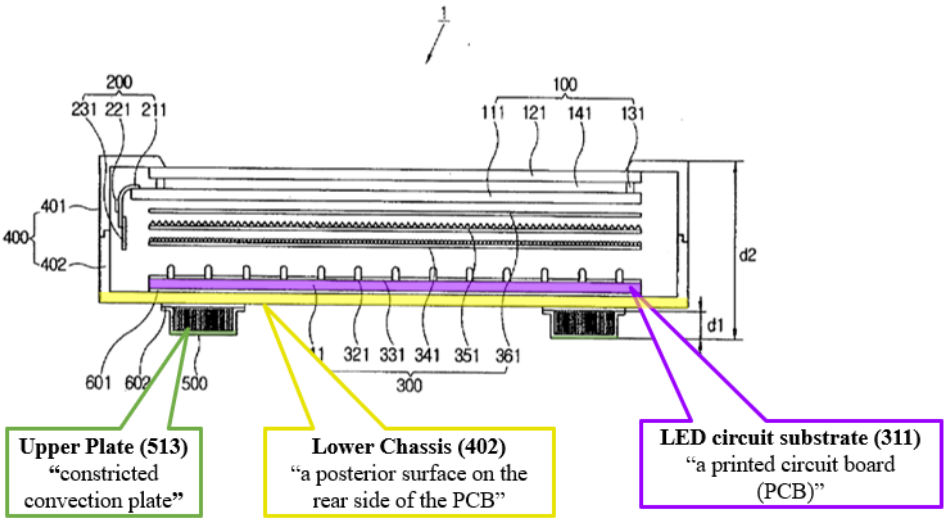

(*Id*., FIGs. 1B & 2 (annotated).)

Cooling apparatus **500** features an upper plate **513** "placed behind and substantially parallel with" the lower chassis **402** ("**the posterior surface of the PCB**"; colored yellow), as shown in the annotated Figures 4 and 5 below:

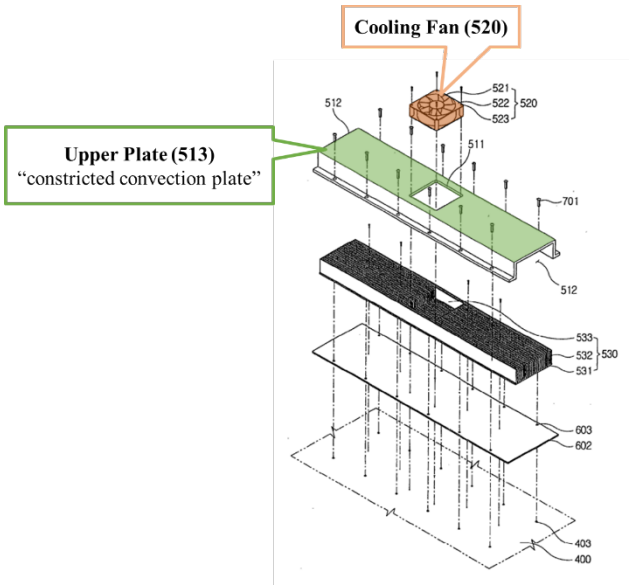

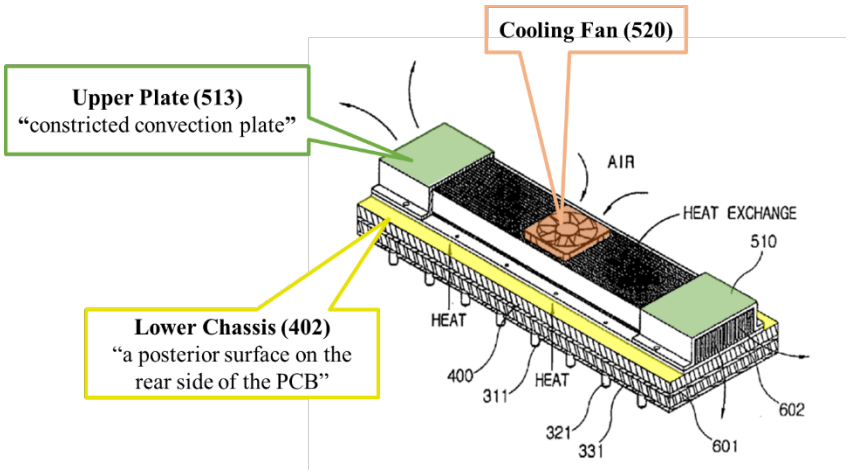

(*Id.*, FIGs. 4 & 5 (annotated); Ex. 1002, ¶376.)

Cho teaches that "[t]he upper plate **513** is **disposed parallel** to the external surface of the lower chassis **402**." (Ex. 1006, ¶[0048]; (emphasis added).) The upper plate **513** along with side surface parts **514** form an enclosure in which air can flow, such that the upper plate **513** of cooling apparatus **500** also is the "**constricted convection plate placed behind and substantially parallel with the posterior surface of the PCB**." (Ex. 1002, ¶377.)

5. Element 4[d]

Cho discloses or renders claim 4[d] obvious. (Ex. 1002, ¶¶379-384.)

Cho discloses a cooling fan **520** disposed in a first opening **511** of upper plate **513** ("**constricted convection plate**") as shown in the exploded view of Figure 4:

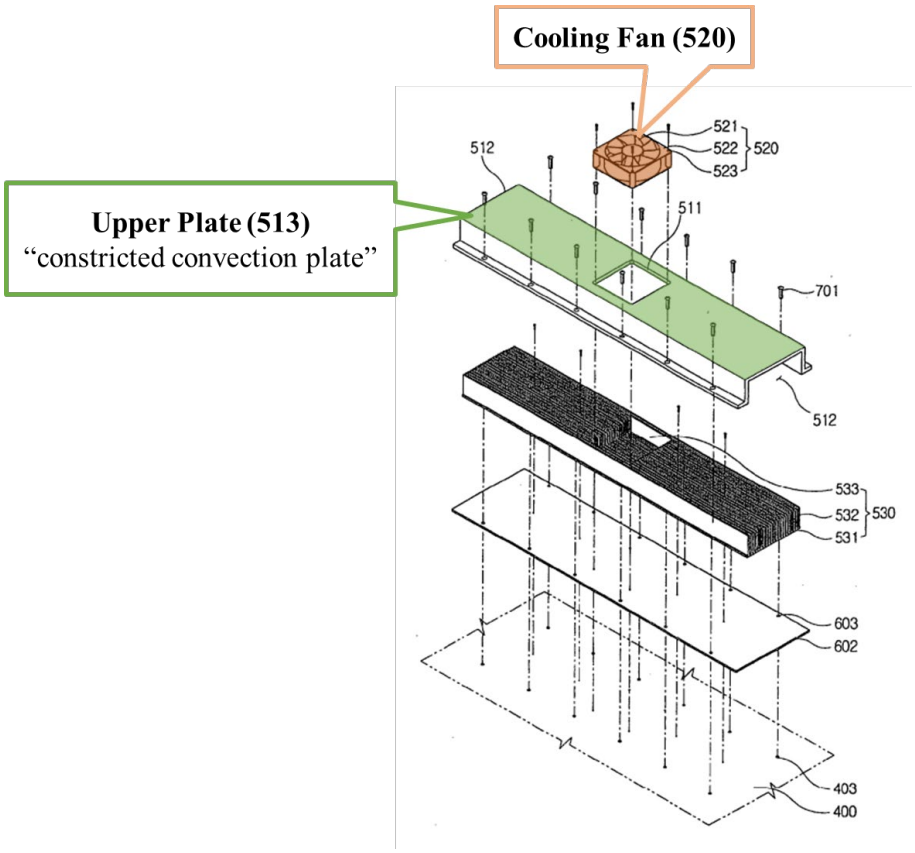

(Ex. 1006, FIG. 4 (annotated).) Cho explains that "[a]ir is introduced [e.g., forced] through the first opening **511** by operation of the cooling fan **520** and discharged through the second opening **512**." (*Id.*, ¶[0050].)

Figure 5 shows the air flow during the operation of cooling fan **520**:

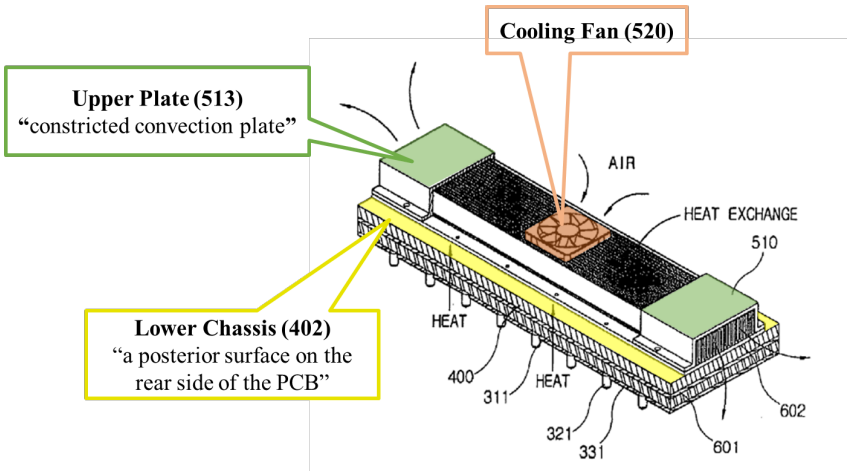

(Ex. 1006, FIG. 5 (annotated).) Cho discloses that depending on the operating direction (e.g., the rotational direction) of cooling fan **520**, air can be introduced from the second opening **512** to the first opening **511**—e.g., opposite to the one shown above in Figure 5. (*Id*., ¶[0056].) Accordingly, a POSITA would have understood that Cho discloses a cooling fan **520** positioned to pull air through and out of the space that separates upper plate **513** ("**constricted convection plate**") and the external surface of lower chassis **402** ("**posterior surface**"). (Ex. 1002, ¶¶382-383.)

B. Claim 5

Cho discloses or renders claim 5 obvious. (Ex. 1002, ¶¶385-388.)

Cho discloses combination part **515**, combination holes **516**, and combination screw **701** permit attachment of the upper plate **513** to the lower chassis **402**:

> The combination part **515** includes combination holes **516** disposed at intervals along a longitudinal length of the combination part. **The combination holes 516 are aligned with contact holes 403 of the lower chassis 402 to permit attachment of the casing 510 to the lower chassis 402** ["the posterior surface"] **via a combination screw 701**.

(Ex. 1006, ¶[0048].) This attachment is reflected by Figure 4:

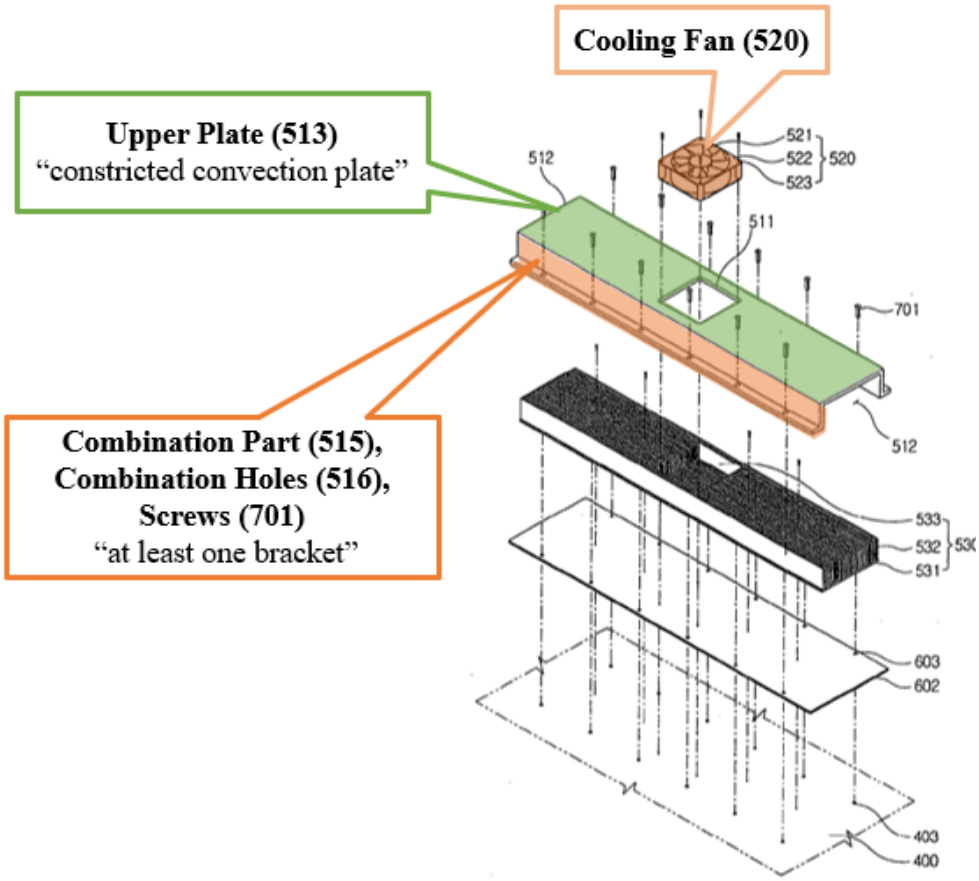

(*Id*., FIG. 4 (annotated).) In other words, combination part **515**, combination holes **516**, and screws **701** collectively form "**at least one bracket which connects the posterior surface with the constricted convection plate**." (Ex. 1002, ¶387.)

C. Independent Claim 9

Cho renders obvious claim 9 of the '322 patent. (Ex. 1002, ¶¶389-407.)

1. Element 9[pre]

To the extent the preamble is limiting, Cho discloses "**[a] system for cooling an electronic display**." (*Id.,* ¶¶390-392.)

Cho discloses a "**system for cooling an electronic display**" for the reasons discussed above with respect to claims 4[pre], 4[c] and 4[d]. (*Supra* §XIX.A.1, XIX.A.4, XIX.A.5; Ex. 1002, ¶391.)

2. Element 9[a]

Cho discloses or renders claim 9[a] obvious. (Ex. 1002, ¶¶393-397.)

Cho's LCD includes a "**front display surface**" ("color filter substrate **121**") and "**a posterior surface**" ("rear chassis **402**")

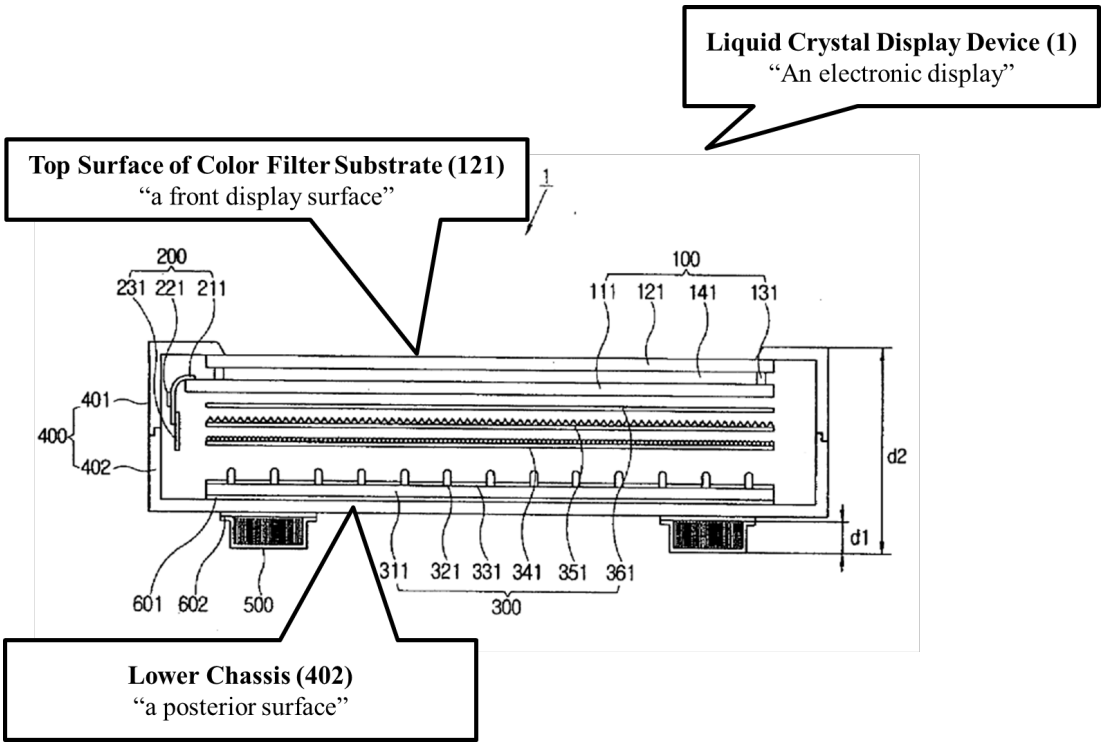

(Exs. 1006, FIG. 2 (annotated); 1002, ¶¶394-395.)

Cho discloses that "heat transmission plate **531**, the lower gap pad **602**, and the lower chassis **402** are closely adhered to each other." (Ex. 1006, ¶[0052].)

Accordingly, there are no electronics [] mounted on the rear surface of lower chassis **402** ("**the posterior surface of the electronic display**"):

FIG. 4

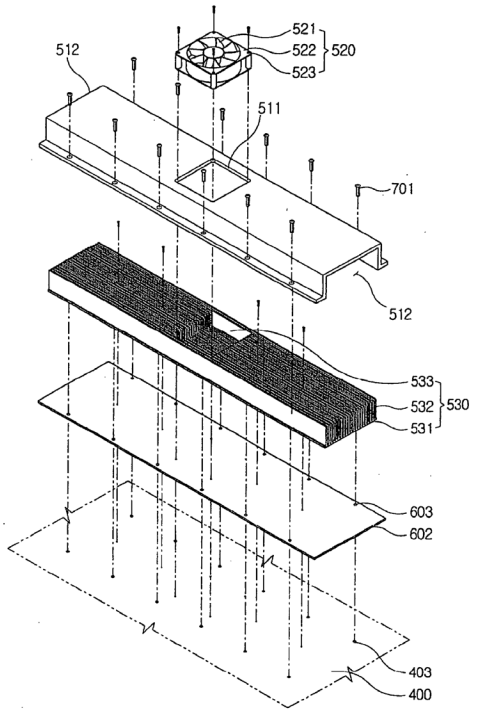

(*Id.*, FIG. 4; Ex. 1002, ¶396.)

3. Element 9[b]

Cho discloses or renders claim 9[b] obvious. (Ex. 1002, ¶¶398-402.)

Cho discloses **"a constricted convection plate behind the posterior surface of the display**" for the reasons discussed with respect to claim 4[c]. (*Supra* §XIX.A.4.)

Cho teaches that "although FIGS 1B and 2 show two cooling apparatuses **500**, more or less may be employed" such that "any number of the cooling apparatuses **500** may be employed." (Ex. 1006, ¶[0043].) With respect to Figure 7A, Cho discloses that the number of cooling apparatuses is "variable" and may be used for larger displays or depending on the amount of heat generated by the backlight unit **300**:

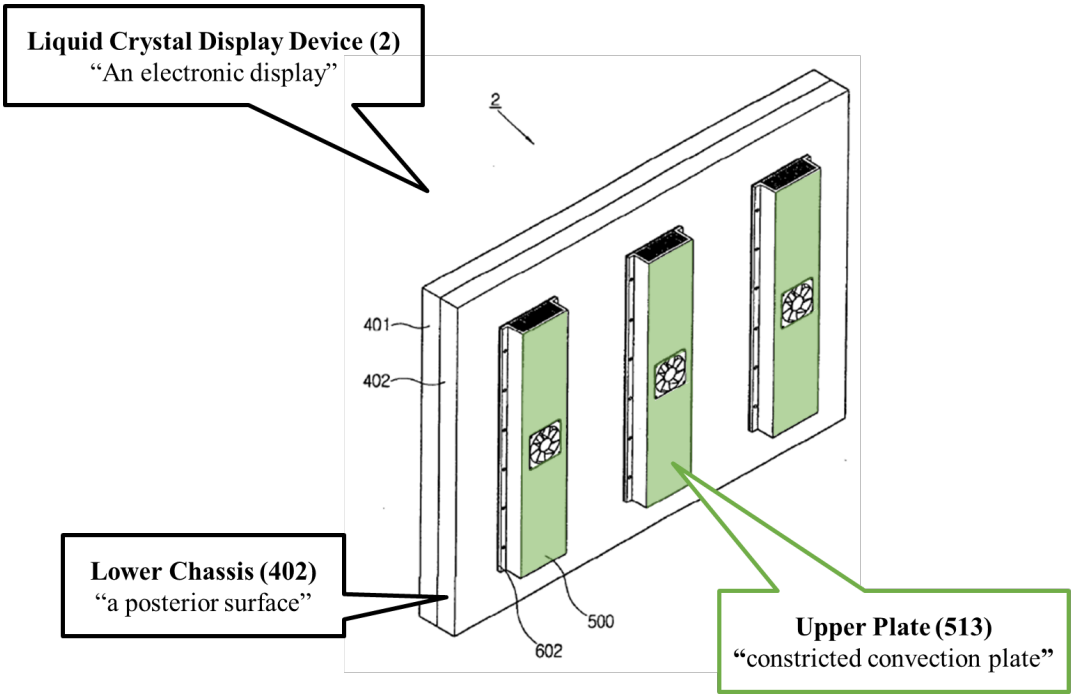

(*Id*., FIG. 7A (annotated), ¶[0061]; Ex. 1002, ¶400.)

A POSITA would therefore have been motivated to optimize cooling of Cho's display by incorporating additional cooling apparatuses **500** or combining several cooling apparatuses into a single larger cooling apparatus with a wider "**constricted convection plate**" that covers the "**majority of the posterior display surface**," with

a reasonable expectation of success, since the primary function of the cooling apparatus will remain unchanged. (Ex. 1002, ¶401.)

4. Element 9[c]

Cho discloses or renders obvious claim 9[c]. (Ex. 1002, ¶¶403-407.)

As discussed above, this is a means-plus-function limitation, in which "forcing air between the constricted convection plate and the posterior surface of the electronic display" is the required function, and in which one or more fans **52**, or refrigeration unit **110**, and their equivalents, is the corresponding structure. (*Supra* §VI.D.)

Cho discloses a cooling fan **520** disposed in a first opening **511** of upper plate **513**. Cho explains that "[a]ir is introduced [e.g., forced] through the first opening **511** by operation of the cooling fan **520** and discharged through the second opening **512**." (Ex. 1006, ¶[0050].) This means that "[t]he cooling fan **520** exhausts air introduced [e.g., forced] from outside the cooling apparatus **500** to a side direction through the heat sink **530**." (*Id.*)

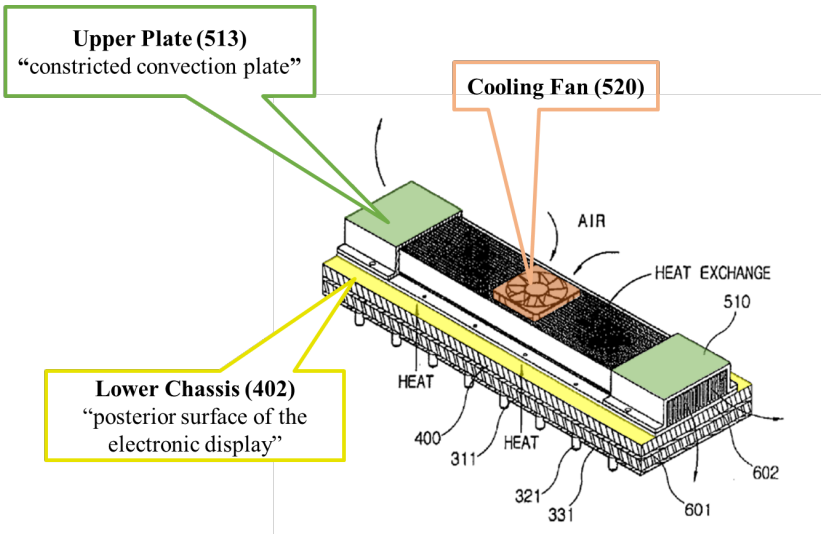

(*Id*., Figure 5 (annotated).)

As such, Cho's cooling fan **520** is a "means for forcing air" in the space that separates upper plate **513** ("constricted convection plate") and lower chassis **402** ("posterior surface"). (Ex. 1002, ¶407.)

D. Claim 10

Cho discloses or renders obvious claim 10. (*Id*., ¶¶408-409.) For example, with respect to Figure 7B, Cho discloses an embodiment including "two first openings **511** and two cooling fans **520**" and "[a] second opening **517** … disposed at the center of each of the cooling apparatuses **502** to exhaust air coming from both directions toward the second opening." (Ex. 1006, ¶[0062].) Openings **511** and **517** are "**apertures**." (Ex. 1002, ¶408.) In optimizing the "**constricted convection plate**" as discussed above with respect to claim 9[b] and in view of these teachings, a POSITA would have been motivated to optimize the number and location of opening apertures with a reasonable expectation of success to enhance cooling. (*Id*.)

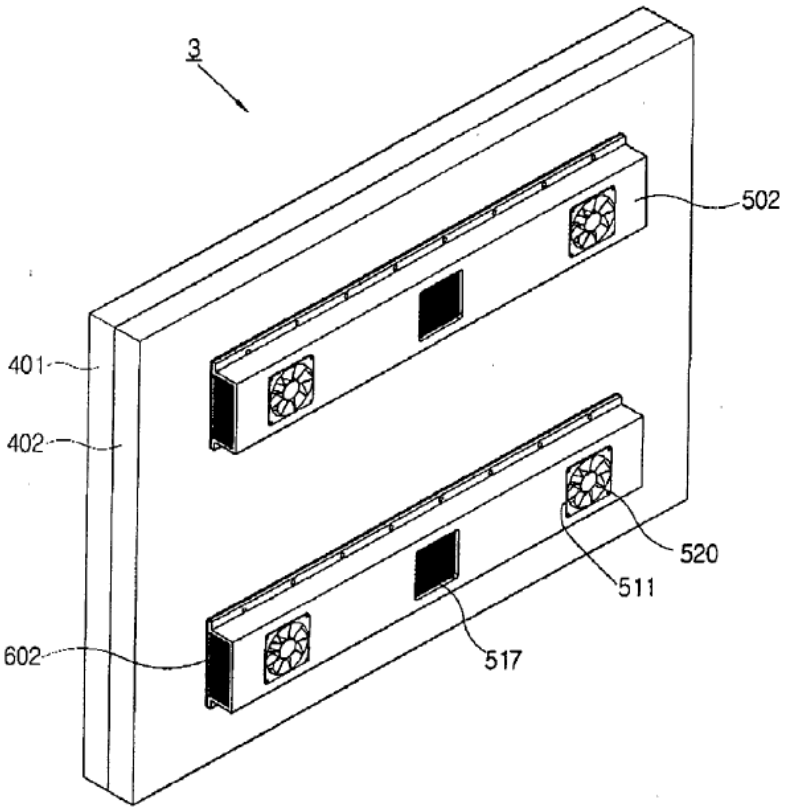

(Ex. 1006, Fig. 7B.)

E. Claim 11

Cho discloses or renders claim 11 obvious for the same reasons Cho satisfies claim 5. (*Supra* §XIX.B; Ex. 1002, ¶410.)

XX. SECONDARY CONSIDERATIONS

Petitioners are not aware of any evidence of secondary considerations of nonobviousness, such as commercial success, alleged long felt but unresolved need, alleged failure of others, or copying by others. (Ex. 1002, ¶¶411-423.)

XXI. CONCLUSION

For the reasons set forth above, Petitioners respectfully submit that they have established a reasonable likelihood of success of showing that the challenged claims are unpatentable, and hence should be cancelled.

Date: May 9, 2023

Respectfully submitted,

/ *Sanjeet Dutta/*
Sanjeet Dutta
Registration No. 46,145
Goodwin Procter LLP
601 Marshall Street
Redwood City, CA 94063
Email: sdutta@goodwinlaw.com
Tel: (650) 752-3100
Fax: (650) 853-1038

XXII. CLAIM APPENDIX OF THE CHALLENGED CLAIMS

1[pre] A system for cooling an electronic display having a posterior display surface and contained within a housing, the system comprising:

1[a] a constricted convection plate placed posterior to the posterior display surface covering the majority of the posterior display surface;

1[b] at least one bracket which connects the posterior display surface with the constricted convection plate; and

1[c] a fan placed to draw ambient air between the constricted convection plate and the rear posterior.

2 The cooling system from claim 1 wherein:

the posterior display surface comprises the rear surface of a backlight assembly.

3 The cooling system from claim 1 wherein:

the constricted convection plate is substantially parallel to the posterior display surface.

4[pre] A liquid crystal display (LCD) comprising:

4[a] a liquid crystal stack;

4[b] a backlight assembly behind the liquid crystal stack and comprising: a printed circuit board (PCB) having front and back

sides; a plurality of LEDs mounted on the front side of the PCB; a posterior surface on the rear side of the PCB;

4[c] a constricted convection plate placed behind and substantially parallel with the posterior surface of the PCB; and

4[d] a fan positioned to draw air between the constricted convection plate and the posterior surface.

5 The LCD from claim 4 further comprising:

at least one bracket which connects the posterior surface with the constricted convection plate.

7 The LCD from claim 4 further comprising:

a housing which contains the liquid crystal stack, backlight assembly, constricted convection plate, and fan; and an entrance aperture within the housing which permits external ambient air to enter the housing and flow between the constricted convection plate and the posterior surface of the PCB.

8 The LCD from claim 4 further comprising:

a plurality of access apertures on the constricted convection plate.

9[pre] A system for cooling an electronic display comprising:

9[a] an electronic display comprising a front display surface and a posterior surface where no electronics are mounted to the posterior surface of the electronic display;

9[b] a constricted convection plate behind the posterior surface of the display covering a majority of the posterior display surface; and

9[c] a means for forcing air between the constricted convection plate and the posterior surface of the electronic display.

10 The cooling system from claim 9 further comprising:

a plurality of apertures on the constricted convection plate.

11 The cooling system from claim 9 further comprising:

at least one bracket which connects the posterior surface with the constricted convection plate.

12[pre] The cooling system from claim 9 further comprising:

12[a] a housing which contains the electronic display, constricted convection plate, and means for forcing air; and

12[b] an entrance aperture within the housing which permits external ambient air to enter the housing and flow between the constricted convection plate and the posterior surface.

13 The cooling system from claim 12 wherein:

the means for forcing air between the constricted convection plate and the posterior surface of the electronic display comprises a plurality of fans placed near the entrance aperture.

16 The cooling system from claim 9 wherein:

the electronic display comprises an LED backlight LCD display where the posterior surface is the rear surface of a backlight assembly.

CERTIFICATE OF WORD COUNT

Pursuant to 37 C.F.R. § 42.24(d), the undersigned certifies that this Petition for *Inter Partes* Review complies with the type-volume limits of 37 C.F.R. § 42.24(a)(1)(i) because it contains 13,965 words according to the word-processing system used to prepare this Petition, excluding the words in the Table of Contents, Table of Authorities, List of Exhibits, Appendix of Claim Listings, Mandatory Notices, Certification Under §42.24(d), and Certificate of Service, as set forth in 37 C.F.R. § 42.24(a)(1).

Date: May 9, 2023

/*Sanjeet Dutta* /

Sanjeet Dutta
Registration No. 46,145
Goodwin Procter LLP
601 Marshall Street
Redwood City, CA 94063
Email: sdutta@goodwinlaw.com
Tel: (650) 752-3100
Fax: (650) 853-1038

CERTIFICATE OF SERVICE

The undersigned certifies that a true and correct copy of the foregoing Corrected Petition together with Exhibit 1039 has been served on the Patent Owner via Federal Express Next Business Day Delivery at the following address:

STANDLEY LAW GROUP LLP
6300 Riverside Drive
Dublin, OH 43017

and has been served by email upon the following:

John C. Alemanni – jalemanni@kilpatricktownsend.com
Carl Sanders – csanders@kilpatricktownsend.com
Michael T. Morlock – mmorlock@kilpatricktownsend.com
Courtney Dabbiere – cdabbiere@kilpatricktownsend.com

Respectfully submitted,
GOODWIN PROCTER LLP

Date: May 9, 2023

By: */Sanjeet Dutta/*
Sanjeet Dutta