**PUBLIC VERSION**

**UNITED STATES INTERNATIONAL TRADE COMMISSION**

**Washington, D.C.**

| | |
|---|---|
| **In the Matter of**<br><br>**CERTAIN OUTDOOR AND SEMI-OUTDOOR ELECTRONIC DISPLAYS, PRODUCTS CONTAINING SAME, AND COMPONENTS THEREOF** | **Inv. No. 337-TA-1331** |

**FINAL INITIAL DETERMINATION ON VIOLATION OF SECTION 337**

Administrative Law Judge Monica Bhattacharyya

(November 13, 2023)

**Appearances**:

*For Complainant Manufacturing Resources International, Inc.:*

Aarti Shah of Kilpatrick Townsend & Stockton LLP in Washington, DC; Dario A. Machleidt and Kathleen R. Geyer of Kilpatrick Townsend & Stockton LLP in Seattle, WA; Russell A. Korn and David A. Reed of Kilpatrick Townsend & Stockton LLP in Atlanta, GA; Craig D. Cannon, Alton L. Absher, III, Andrea A. Anderson, and Jonathan E. Harris of Kilpatrick Townsend & Stockton LLP in Winston-Salem, NC; and Matthew J. Meyer of Kilpatrick Townsend & Stockton LLP in Menlo Park, CA.

*For Respondents Samsung Electronics Co., Ltd., Samsung Electronics America, Inc., Samsung SDS America, Inc., Industrial Enclosures Corporation d/b/a Palmer Digital Group, and Coates US Inc.*

Patrick J. McCarthy, Annaka Nava, Jacqueline Genovese Bova, and Jeremy Jones of Goodwin Procter LLP in Washington, DC; Darryl M. Woo of Goodwin Procter LLP in San Francisco, CA; Yoona Lee and Elizabeth J. Low of Goodwin Procter LLP in Redwood City, CA; Srikanth K. Reddy, Douglas J. Kline, Christie L. Larochelle, and Harrison Gunn of Goodwin Procter LLP in Boston, MA; and Naomi L. Birbach, Christine Potkay, and Christina Denise Go of Goodwin Procter LLP in New York, NY.

Pursuant to the Notice of Investigation, ((EDIS Doc. ID 780596) (Sept. 19, 2022); 87 Fed. Reg. 58,132–33 (EDIS Doc. ID 780930 (Sept. 23, 2022)), and Commission Rule 210.42, this is the administrative law judge's final initial determination on violation in the matter of *Certain Outdoor and Semi-Outdoor Electronic Displays, Products Containing Same, and Components Thereof*, Commission Investigation No. 337-TA-1331. 19 C.F.R. § 210.42(a)(1)(i).

It is the undersigned's final initial determination that there has been no violation of section 337 of the Tariff Act of 1930, as amended, 19 U.S.C. § 1337, in the importation into the United States, the sale for importation, and/or the sale within the United States after importation of certain outdoor and semi-outdoor electronic displays, products containing same, and components thereof with respect to U.S. Patent Nos. 8,854,595; U.S. Patent No. 9,173,322; U.S. Patent No. 9,629,287; U.S. Patent No. 10,506,740; and U.S. Patent No. 11,013,142.



SEC et al. v. MRI
SEC Exhibit 1048.002
IPR2023-00220

## TABLE OF CONTENTS


**I. BACKGROUND ..... 1**
- A. Procedural History ..... 1
- B. The Parties ..... 4
- C. Products at Issue ..... 5
- D. Witness Testimony ..... 12

**II. JURISDICTION AND IMPORTATION ..... 15**
- A. Personal Jurisdiction ..... 15
- B. Jurisdiction and Importation ..... 15

**III. LEGAL STANDARDS ..... 16**
- A. Infringement ..... 16
- B. Invalidity ..... 19
- C. Other Affirmative Defenses ..... 24
- D. Domestic Industry ..... 26

**IV. THE ASSERTED PATENTS ..... 28**
- A. The ’595 Patent and the ’322 Patent ..... 28
- B. The ’287 patent ..... 36
- C. The ’740 Patent and the ’142 Patent ..... 39
- D. Level of Ordinary Skill in the Art ..... 44

**V. INFRINGEMENT ..... 44**
- A. The ’595 Patent ..... 44
- B. The ’322 Patent ..... 84
- C. The ’287 Patent ..... 103
- D. The ’740 Patent ..... 122
- E. The ’142 Patent ..... 137

**VI. DOMESTIC INDUSTRY TECHNICAL PRONG ..... 142**
- A. The ’595 Patent ..... 142
- B. The ’322 Patent ..... 153
- C. The ’287 Patent ..... 161
- D. The ’740 Patent ..... 163
- E. The ’142 Patent ..... 166

**VII. DOMESTIC INDUSTRY ECONOMIC PRONG ..... 172**

**VIII. INVALIDITY ..... 172**
- A. The Asserted Prior Art References ..... 172
- B. The ’595 Patent ..... 175
- C. The ’322 Patent ..... 206
- D. The ’287 Patent ..... 237
- E. The ’740 Patent ..... 245
- F. The ’142 Patent ..... 274
- G. Secondary Considerations of Nonobviousness ..... 288
- H. Improper Inventorship ..... 299

**IX. UNENFORCEABILITY ..... 313**
- A. Inequitable Conduct ..... 313
- B. Unclean Hands ..... 316

**X. CONCLUSIONS OF LAW ..... 319**




SEC et al. v. MRI
SEC Exhibit 1048.003
IPR2023-00220

The following abbreviations may be used in this Initial Determination:

| | |
|---|---|
| **Tr.** | Hearing Transcript |
| **Dep. Tr.** | Deposition Transcript |
| **JX** | Joint Exhibit |
| **CX** | Complainant's exhibit |
| **CPX** | Complainant's physical exhibit |
| **CDX** | Complainant's demonstrative exhibit |
| **RX** | Respondents' exhibit |
| **RPX** | Respondents' physical exhibit |
| **RDX** | Respondents' demonstrative exhibit |
| **CPHB** | Complainant's pre-hearing brief (EDIS Doc. ID 797866) |
| **CIB** | Complainant's initial post-hearing brief (EDIS Doc. ID 800734) |
| **CRB** | Complainant's post-hearing reply brief (EDIS Doc. ID 801241) |
| **RPHB** | Respondents' pre-hearing brief (EDIS Doc. ID 797858) |
| **RIB** | Respondents' initial post-hearing brief (EDIS Doc. ID 800724) |
| **RRB** | Respondents' post-hearing reply brief (EDIS Doc. ID 801209) |



SEC et al. v. MRI
SEC Exhibit 1048.004
IPR2023-00220

# I. BACKGROUND

## A. Procedural History

The Commission instituted this investigation on September 19, 2022, in response to a complaint filed by Complainant Manufacturing Resources International, Inc. ("MRI" or "Complainant") on August 19, 2022 (the "Complaint," EDIS Doc. ID 778357). Notice of Investigation at 1, EDIS Doc. ID 780596 (Sept. 19, 2022); 87 Fed. Reg. 58,132–33 (Sept. 23, 2022). The Complaint alleges violations of section 337 of the Tariff Act of 1930, as amended, by reason of infringement of certain claims of U.S. Patent No. 8,854,595 ("the '595 patent"); U.S. Patent No. 9,173,322 ("the '322 patent"); U.S. Patent No. 9,629,287 ("the '287 patent"); U.S. Patent No. 10,506,740 ("the '740 patent"); and U.S. Patent No. 11,013,142 ("the '142 patent") (collectively, "the Asserted Patents"). Notice of Investigation at 1. The Commission ordered institution of this investigation to determine "whether there is a violation of subsection (a)(1)(B) of section 337 in the importation into the United States, the sale for importation, or the sale within the United States after importation of certain products . . . by reason of infringement of one or more of claims 1, 4, 7 and 8 of the '595 patent; claims 4, 5, 8, 9, 12, 13, and 16 of the '322 patent; claims 1, 4, 8–12, 15, and 21-23 of the '287 patent; claims 1, 5, an 6 of the '740 patent; and claims 1–15 of the '142 patent.; and whether an industry in the United States exists as required by subsection (a)(2) of section 337." *Id.* at 2. The investigation was instituted upon publication of the Notice of Investigation in the *Federal Register* on September 22, 2022. 87 Fed. Reg. 58,132–33 (Sept. 23, 2022). The Notice of Investigation named the following entities as Respondents: Samsung Electronics Co., Ltd., Samsung Electronics America, Inc., Samsung SDS Co. Ltd., Samsung SDS America, Inc., Industrial Enclosure Corporation d/b/a Palmer

Digital Group, Coates Signco Pty Limited, and Coates Visual LLC. Notice of Investigation at 2-3. The Office of Unfair Import Investigations is not a party to the investigation. *Id.* at 3.

On October 25, 2022, MRI filed an Amended Complaint to withdraw its allegations against Coates Visual LLC and to add proposed respondent Coates US Inc. EDIS Doc. ID 783004 ("Amended Complaint"); *see also* Order No. 6, EDIS Doc. ID 782880 (Oct. 24, 2022) (initial determination granting motion for leave to amend), *unreviewed*, Comm'n Notice, EDIS Doc. ID 784266 (Nov. 10, 2022). Responses to the Amended Complaint and Notice of Investigation were filed by Respondents Samsung Electronics Co., Ltd. and Samsung Electronics America, Inc., (EDIS Doc. ID 783049) ("Samsung Electronics' Response"), Respondents Samsung SDS Co. Ltd. and Samsung SDS America, Inc. (EDIS Doc. ID 783061) ("Samsung SDS's Response"), Respondents Coates Signco Pty Limited and Coates US Inc. (EDIS Doc. ID 783053) ("Coates's Response"), and Respondent Industrial Enclosure Corporation d/b/a Palmer Digital Group (EDIS Doc. ID 783059) ("Palmer's Response"), disputing MRI's allegations with respect to infringement and domestic industry and asserting certain affirmative defenses.

A *Markman* hearing was held on March 1, 2023. *See Markman* Hr'g Tr., EDIS Doc. ID 791574 (March 2, 2023). A *Markman* order issued on May 15, 2023, construing certain disputed claim terms. Order No. 13, EDIS Doc. ID 796384 (May 15, 2023).

Respondent Samsung SDS Co. Ltd. was terminated from the investigation by Order No. 10, EDIS Doc. ID 795584 (May 4, 2023), *unreviewed*, Comm'n Notice, EDIS Doc. ID 797798 (June 5, 2023). Respondent Coates Signco Pty Limited was terminated from the investigation by Order No. 11, EDIS Doc. ID 795586 (May 4, 2023), *unreviewed*, Comm'n Notice, EDIS Doc. ID 797798 (June 5, 2023). On June 15, 2023, the undersigned issued an initial determination granting MRI's Motion for Summary Determination That the Economic

Prong of the Domestic Industry Requirement is Satisfied, (Order No. 19, EDIS Doc. ID 798730), which the Commission determined not to review. Comm'n Notice, EDIS Doc. ID 800420 (July 17, 2023).

On June 20, 2023, the undersigned issued an initial determination granting summary determination of noninfringement as to the following products: OM46N, OM55N, OM46B, OM55B, and OM75A with respect to the following claims: claims 9, 12, 13, and 16 of the '322 patent; claims 12 and 15 of the '287 patent; claims 1, 5, and 6 of the '740 patent; and claims 1, 2, 3, 6, 8, 10, 11 and 12 of the '142 patent. Order No. 21, EDIS Doc. ID 798947. The undersigned also granted summary determination of noninfringement as to the OH46/55 (referred to in this Initial Determination as the Samsung Mid-Sized Products) with respect to claims 1-3, 6, 8, and 10-12 of the '142 patent and claim 7 of the '595 patent. *Id.* The Commission affirmed this initial determination as to non-terminated claims. Comm'n Notice, EDIS Doc. ID 804167 (Sept. 11, 2023) (determining to review and, on review, affirming Order No. 21). On June 23, 2023, the undersigned issued an order denying summary determination of non-infringement as to the OH24B product based on MRI's representation that it did not seek to include the OH24B product within the scope of any exclusion order that may issue in the investigation. *See* Order No. 31, EDIS Doc. ID 799229.

An evidentiary hearing was held on June 26-30, 2023. On July 11, 2023, the following claims were terminated from this Investigation: claims 13, 16, and 18 of U.S. Patent No. 8,854,595; claims 1, 2, 7, and 16 of U.S. Patent No. 9,173,322; claims 1-11, 13, 15, 17-19 and 21-23 of U.S. Patent No. 9,629,287; claims 2-3, 6, 8, 10, 13, 15-18, and 20 of U.S. Patent No. 10,506,740; and claims 1-5, 7-9, and 11-15 of U.S. Patent No. 11,013,142, (*see* Order No. 36, EDIS Doc. ID 800149), which the Commission determined not to review. *See* Comm'n Notice,

EDIS Doc. ID 802064 (Aug. 9, 2023). The parties filed initial post-hearing briefs on July 21, 2023, and filed post-hearing reply briefs on July 31, 2023.

### B. The Parties

#### 1. Complainant

The Complainant is Manufacturing Resources International, Inc. ("MRI"). Notice of Investigation at 2. MRI is a corporation organized and existing under the laws of Georgia with a principal place of business at 6415 Shiloh Road East, Alpharetta, GA 30005. Amended Complaint ¶ 15. As discussed below, the undisputed evidence shows that MRI is the owner of the Asserted Patents by assignment. *See* discussion *infra*.

#### 2. Respondents

The remaining Respondents are: 1) Samsung Electronics Co., Ltd. ("SEC"), Samsung Electronics America, Inc. ("SEA" and, together, "Samsung Electronics"); 2) Samsung SDS America, Inc. ("Samsung SDS"), Industrial Enclosures Corporation d/b/a Palmer Digital Group ("Palmer"), and Coates US Inc ("Coates") (together, "Respondents"). Notice of Investigation at 2; Order No. 6; Order No. 10; Order No. 11.

SEC is a corporation organized and existing under the laws of the Republic of Korea with a principal place of business at 129 Samsung ro (Maetandong) Yeongtong-gu Suwon-si, Gyeonggi-do 16677 Korea. Samsung Electronics' Response ¶ 22.

SEA is a wholly owned subsidiary of SEC. *Id.* ¶ 24. SEA is a corporation organized and existing under the laws of New York with a principal place of business at 85 Challenger Road, Ridgefield Park, New Jersey 07660. *Id.*

Samsung SDS is a corporation organized and existing under the laws of California with a principal place of business at 100 Challenger Road, Ridgefield Park, New Jersey 07660. *See* Samsung SDS's Response ¶ 26.

Palmer is a corporation organized and existing under the laws of Illinois with a principal place of business at 619 N Loucks St., Aurora, Illinois 60505. Palmer's Response ¶ 39.

Coates is a corporation organized and existing under the laws of Delaware with a principal place of business at 112 N May Street, Chicago, Illinois 60607. Coates's Response ¶ 35.

### C. Products at Issue

The products at issue are "outdoor and semi-outdoor electronic displays, products containing same (housings, enclosures, kiosks, and menu boards), and components thereof (systems for cooling electronic displays)." Notice of Institution at 2. The products accused of infringement are certain outdoor and semi-outdoor electronic displays and products containing the same, that are manufactured and assembled by Samsung Electronics, and integrated into displays and products sold by Palmer and Coates. CIB at 9-15. For the domestic industry requirement, MRI relies on relies on certain outdoor electronic display product lines made by MRI. *Id*. at 15-18.

#### 1. Accused Products

The accused products are certain outdoor and semi-outdoor electronic displays and products containing the same, that are or include displays manufactured and assembled by Samsung Electronics. ("the Accused Products"). CIB at 9-10. Each accused electronic display is part of a "series" bearing one of the following labels: OH-F, OH-N, OH-A, and OH-B. *Id.*

The products belonging to each series and their model codes are depicted in the table below ("Accused Samsung Products"):

| Accused Samsung Product | | |
|---|---|---|
| **Series** | **Product Name** | **Model Code** |
| OH-F | OH85F | LH85OHFPLBC/GO; LH85OHFPLBC/ZA |
| | OH75F | LH75OHFPLBC/ZA |
| | OH55F | LH55OHF2VBC/GO; LH55OHFPKBC/GO; LH55OHFPLBC/GO; LH55OHFPLBC/GO; LH55OHFPVBC/GO; LH55OHFPVBC/ZA |
| | OH46F | LH46OHF2VBC/GO; LH46OHFPKBC/GO; LH46OHFPVBC/GO |
| OH-N | OH85N | LH85OHNSKGB/ZA |
| | OH85N-D | LH85OHNDKGB/ZA |
| | OH85N-S | LH85OHNSLGB/ZA |
| OH-A | OH75A | LH75OHAEBGBXZA |
| | OH55A-S | LH55OHAESGBXGO |
| | OH55A | LH55OHAEBGBXGO |
| OH-B | OH46B | LH46OHBEBGBXGO |

*Id.* at 10.

MRI divides the Accused Samsung Products into the mid-sized products (46 inch and 55 inch displays) ("Accused Samsung Mid-Sized Products" or "Samsung Mid-Sized Products") and the large-sized products (75 inch and 85 inch displays) ("Accused Samsung Large-Sized Products" or "Samsung Large-Sized Products"). *Id.*

The Accused Products also include enclosures manufactured by Coates and Palmer that integrate the Accused Samsung Mid-Sized Products. *Id.* at 12-13.

The Accused Coates Products are:

| Coates Product | | |
|---|---|---|
| **Integrated Samsung Product** | **Product Name** | **Model Code** |
| OH55A-S | ODMB 02 Single Display | 02-55-2S |
| | ODMB 02 Double Display | 02-55-2D |
| | 03 Outdoor Digital Menu Board | CD-DDT-O3-55-5D/5S |
| | 55" Outdoor Wall Mount 2 Double & Single | ODMB-WM2-55in |
| | 55" Outdoor Wall Mount 1 Double & Single | ODMB-WM-55-01-USA |
| | SBUX 55" Outdoor Digital Board, Single | SB-ODMB-O3-S-55- |

| | | SGL |
|---|---|---|
| OH46F | SBUX Outdoor 46" Shroud | CD-ODMB-02-46 |

*Id.* at 12.

The Accused Palmer Products are:

| Integrated Samsung Product | Product Name |
|---|---|
| OH55F | ODPK46-55BB |
| | ODPK46-55 |
| | PSDMB146-55 |
| | PDGEV55 |
| | PDGEV55D |
| | QSRDMB – Canopy |
| | QSRDMB155 |
| | QSRDMB255 |
| | QSRDMB355 |
| | Static-Digital Hybrid Menu Board |
| | ODPK55-T |
| | ODPK55-BB-T |
| OH46F | ODPK46-55BB |
| | ODPK46-55 |
| | PSDMB146-55 |
| | QSRDMB346 |
| | ODPK46-T |
| | ODPK46-BB-T |
| | QSRDMB146 |
| | QSRDMB246 |

*Id.* at 12-13.

**2. Domestic Industry Products**

MRI states that the following products support its domestic industry contentions in this investigation:

| MRI Product | | |
|---|---|---|
| **Family** | **Model Description** | **MRI Part Number Model Code** |
| 55" | Gen 14 55 Single Landscape | 5500-000-CG-220-xx |
| | Gen 14 55 Single | k5500-000-BD-230-xx-1b |
| | Gen 15 55 Single Slim | k5500-000-HJ-251-xx-1a |

| MRI Product | | |
|---|---|---|
| **Family** | **Model Description** | **MRI Part Number Model Code** |
| | Gen 15 55 Single | k5500-000-HA-252-xx-1b |
| | Gen 14 55 Double | k5500-000-BD-230-xx-2b |
| | Gen 14.5 55 Double EV | k5500-000-HU-250-xx-2a |
| | Gen 15 55 Double | k5500-000-HA-254-xx-2m |
| 75” | Gen 11 75 Single | 7500-000-BX-012-xx |
| | Gen 14 75 Single Landscape | k7500-000-HH-230-xx-1a |
| | Gen 14 75 Single | k7500-000-HJ-231-xx-1b |
| | Gen 14.5 75 Single | k7500-000-HJ-235-xx-1b |
| | Gen 15 75 Single | k7500-000-HU-252-xx-1b |
| | Gen 16 75 Single | k7500-000-HU-261-xx-1a |
| | Gen 11 75 Double | k7500-000-BX-212-xx |
| | Gen 14 75 Double | k7500-000-HA-230-xx-2a |
| | Gen 16 75 Double | k7500-000-HA-261-xx-2a |
| 86” | Gen 11 86 in Hybrid Single | 8600-000-BX-030-xx |
| | Gen 15 86 Single | k8600-000-HJ-250-xx-1b |
| | Gen 16 86 Single | k8600-000-JE-260-xx-1a |
| | Gen 11 86 in Single | 8600-000-BX-012-xx |
| | Gen 11 86 in Hybrid Double | k8600-000-BX-230-xx |
| | Gen 11 86 in Double | k8600-000-BX-212-xx |
| | Gen 16 86 Double | k8600-000-BK-260-xx-2a |
| 88” | Gen 16 88 Stretch Landscape | k8800-000-BR-250-xx-1a |

*Id.* at 15.

MRI divides the Asserted DI Products into five groups: (1) 55- and 88-inch Single-Sided Displays (“MRI 55/88 Single” products); (2) 55-inch Double-Sided Displays (“MRI 55 Double” products); (3) 75- and 86-inch Single-Sided Displays (“MRI 75/86 Single” products); (4) 75- and 86-inch Double-Sided Displays (“MRI 75/86 Double” products); (5) 75- and 86-inch Generation 16 Double-Sided Displays (“MRI 75/86 Gen 16” products) (collectively, “the Asserted DI

Products").[1] CIB at 16. Mr. Brown testified at the hearing that he divided the Asserted DI products into the five groups based on whether they had [redacted] Tr. (Brown) at 247:9-16; CDX-0005C at 10:

| Group 1: 55" and 88" Single | Model Description | Model Code |
|---|---|---|
| 55" | Gen 14 55 Single Landscape | 5500-000-cg-220-xx |
| | Gen 14 55 Single | k5500-000-bd-230-xx-1b |
| | Gen 15 55 Single Slim | k5500-000-hj-251-xx-1a |
| | Gen 15 55 Single | k5500-000-ha-252-xx-1b |
| 88" | Gen 16 88 Stretch Landscape | k8800-000-br-250-xx-1a |

| Group 2: 55" Double | Model Description | Model Code |
|---|---|---|
| 55" | Gen 14 55 Double | k5500-000-bd-230-xx-2b |
| | Gen 14.5 55 Double EV | k5500-000-hu-250-xx-2a |
| | Gen 15 55 Double | k5500-000-ha-254-xx-2m |

| Group 3: 75" and 86" Single | Model Description | Model Code |
|---|---|---|
| 75" | Gen 11 75 Single | 7500-000-bx-012-xx |
| | Gen 14 75 Single Landscape | k7500-000-hh-230-xx-1a |
| | Gen 14 75 Single | k7500-000-hj-231-xx-1b |
| | Gen 14.5 75 Single | k7500-000-hj-235-xx-1b |
| | Gen 15 75 Single | k7500-000-hu-252-xx-1b |
| | Gen 16 75 Single | k7500-000-hu-261-xx-1a |
| 86" | Gen 11 86 in Hybrid Single | 8600-000-bx-030-xx |
| | Gen 15 86 Single | k8600-000-hj-250-xx-1b |
| | Gen 16 86 Single | k8600-000-je-260-xx-1a |
| | Gen 11 86 in Single | 8600-000-bx-012-xx |

| Group 4: 75" and 86" Double | Model Description | Model Code |
|---|---|---|
| 75" | Gen 11 75 Double | k7500-000-bx-212-xx |
| | Gen 14 75 Double | k7500-000-ha-230-xx-2a |
| 86" | Gen 11 86 in Hybrid Double | k8600-000-bx-230-xx |
| | Gen 11 86 in Double | k8600-000-bx-212-xx |

| Group 5: 75" and 86" Gen 16 Double | Model Description | Model Code |
|---|---|---|
| 75" | Gen 16 75 Double | k7500-000-ha-261-xx-2a |
| 86" | Gen 16 86 Double | k8600-000-bk-260-xx-2a |

MRI contends that the "MRI Generation 15 55" Single Sided Product" is representative of the MRI 55/88 Single Sided products. CIB at 16. It also refers to the MRI 55/88 Single Sided products as "Group 1" products. Mr. Brown described the [redacted] for the Group 1 products and testified that the Group 1 products [redacted]. Tr. (Brown) at 247:17-252:11.

[1] The MRI 55/88 Single and MRI 55 Double products (Groups 1 and 2), collectively, have also been referred to as "Mid-Size DI Products" for purposes of the economic prong of domestic industry. Order No. 19 at 5. The MRI 75/86 Single, MRI 85/86 Double, and MRI 75/86 Gen 16 products (Groups 3, 4, and 5), collectively, have also been referred to as "Large Format DI Products" for purposes of the economic prong of domestic industry. *Id.*

MRI contends that the "MRI Generation 15 55" Double Sided Product" is representative of the MRI 55 Double products. CIB at 16-17. It also refers to the MRI 55 Double products as "Group 2" Products. Mr. Brown described the [redacted] for the Group 2 products and testified that the Group 2 products all had [redacted]. Tr. (Brown) at 252:12-256:4.

MRI contends that the "MRI Generation 11 86" Single Sided Product" is representative of the MRI 75/86 Single products. CIB at 17. It also refers to the MRI 75/86 Single products as "Group 3" Products. Mr. Brown described the [redacted] for the Group 3 products and testified that the Group 3 products all had [redacted]. Tr. (Brown) at 256:5-257:14.

MRI contends that the "MRI Generation 11 86" Double Sided Product" is representative of the MRI 75/86 Double products. CIB at 17. It also refers to the MRI 75/86 Double products as "Group 4" Products. Mr. Brown described the [redacted] for the Group 4 products and testified that the Group 4 products all had [redacted]. Tr. (Brown) at 257:15-259:3.

MRI contends that the "MRI Generation 16 75" Double Sided Product" is representative of the MRI 75/86 Gen 16 products. CIB at 17-18. It also refers to the MRI 75/86 Gen 16 products as "Group 5" Products. Mr. Brown described the [redacted] for the Group 5 products and testified that the Group 5 products all had [redacted]. Tr. (Brown) at 259:4-261:5.

### 3. Non-Accused Products for which Adjudication is Sought

Respondents assert that the [redacted] products were redesigned so as to be non-infringing. RIB at 10. The parties dispute whether the redesigns are subject to adjudication.

RIB at 12-16, 56; RRB at 35; CIB at 74-82; CRB at 2-8, 44. The parties agree that the redesigned [redacted] products are only relevant to the ’287 patent. RIB at 12; CIB at 74. Respondents seek a determination that the redesigned products do not infringe claim 12 of the ’287 patent. RIB at 56.

Respondents also seek a determination of non-infringement regarding five products which MRI has not accused of infringement: OM46B, OM46N, OM55B, OM55N, and OM75A (collectively, “the Non-Accused OM Products”). RIB at 35-36, 46-47. On April 27, 2023, Respondents moved for summary determination of non-infringement by the Non-Accused OM Products.[2] Mot. Dkt. No. 1331-007, EDIS Doc. ID 795057. On June 20, 2023, the undersigned granted summary determination that the Non-Accused OM Products do not infringe claims 9, 12, 13, and 16 of the ’322 patent and do not infringe any asserted claims of the ’287 patent, the ’740 patent, and the ’142 patent. Order No. 21 at 13, *aff’d as to non-terminated claims*, Comm’n Notice, EDIS Doc. ID 804167 (Sept. 11, 2023). The undersigned denied summary determination that the Non-Accused OM Products do not infringe the other asserted claims of the ’322 patent and the asserted claims of the ’595 patent. *Id.* at 13. In their post-hearing briefs, Respondents seek adjudication of the Non-Accused OM Products as to the asserted claims of the ‘595 and ‘322 patents. RIB at 35-36, 46-47.

Respondents also seek a determination of non-infringement for certain Accused Products that are not accused of infringing certain Asserted Claims. RIB at 44, 46, 55, 57. On April 27, 2023, Respondents moved for summary determination of non-infringement for such products.

[2] Respondents also sought summary determination of non-infringement by the unaccused OH24B Product. The undersigned denied this motion because MRI stated that it did not seek to include the OH24B in any exclusion order. Order No. 31 at 2, EDIS Doc. ID 799229 (June 23, 2023).

Mot. Dkt. No. 1331-007, EDIS Doc. ID 795057. On June 20, 2023, the undersigned granted summary determination that the Samsung Mid-Sized Products do not infringe claims 1-3, 6, 8, 10, 11, and 12 of the ’142 patent and claim 7 of the ’595 patent. Order No. 21 at 19, EDIS Doc. 798947, *aff’d as to non-terminated claims*, Comm’n Notice, EDIS Doc. ID 804167 (Sept. 11, 2023). The undersigned denied the remainder of the motion. *See generally id.* In their post-hearing briefs, for the ’595 patent, Respondents seek a determination that the Samsung Mid-Sized Products do not infringe claims 4 and 8, and that the Samsung Large-Sized Products do not infringe claim 1. RIB at 25, 35-36. For the ’322 patent, Respondents seek a determination that the Samsung Mid-Sized Products do not infringe claims 4, 5, and 8 and that the Samsung Large-Sized Products do not infringe claims 9, 12, and 13. RIB at 44, 46-47. For the ’287 patent, Respondents seek a determination that the Samsung Large-Sized Products do not infringe claim 12. RIB at 55. For the ’740 patent, Respondents seek a determination that the Accused Samsung Mid-Sized Products do not infringe claims 1 and 5. RIB at 57.

### D. Witness Testimony

The parties presented testimonial evidence in this investigation in the form of live testimony and deposition designations.

#### 1. Party Witnesses

Party witnesses at the hearing included: (1) Mr. Bill Dunn, the founder of MRI as well as its current president and CEO (Tr. (Dunn) at 42:20-25); (2) Mr. David Williams, who was vice president of engineering and chief technical officer for MRI and is now retired (Tr. (Williams) at 167:16-168:8); (3) Mr. Alan Brand, who is chief financial officer for MRI (Tr. (Brand) at 203:17-19); (4) Mr. Michael Brown, who is vice president of mechanical engineering for MRI

(Tr. (Brown) at 227:2-5); and (5) Mr. Sungsu Lee, who is a staff engineer for SEC within its digital display business unit. (Tr. (Lee) at 593:21-594:20).

**2. Third-Party Witnesses**

Certain third-party witnesses testified at the hearing. Respondents called Mr. Chris Bolton, who was a founding member of Vertigo Group. Tr. (Bolton) at 793:13-20. Respondents also called Mr. Dwayne Gavel, a freelance mechanical designer who runs a design consultancy called CubicArt Design, and who Vertigo Group retained to help with creating rendered product images for a bid for a company called Outdoor Promotions. Tr. (Gavel) at 887:5-12, 889:20-890:6.

**3. Expert Witnesses**

MRI's first expert witness was Mr. Thomas L. Credelle, who was admitted as an expert in the areas of electronic displays, including thermal management, R&D, engineering, and engineering in the flat panel display industry, to provide testimony related to infringement and the technical prong of the domestic industry requirement, and invalidity. Tr. (Credelle) at 305:24-429:6 (expert qualification at 305:24-312:2). MRI also called Dr. Himanshu Pokharna, who was admitted as an expert in the field of thermal management of electronic displays to provide testimony on issues related to infringement, the technical prong of the domestic industry requirement, and invalidity. Tr. (Pokharna) at 431:5-590:25 (expert qualification at 431:5-435:5). MRI also called Mr. Andrew F. Hirshfeld, who was admitted as an expert in the area of USPTO policies and procedures to provide testimony related to conception, reduction to practice, inventorship, invalidity, and inequitable conduct. Tr. (Hirshfeld) at 1306:14-1335:3 (expert qualification at 1310:5-12).

Respondents' first expert witness was Dr. Dean Neikirk, who was admitted as an expert in the field of thermal management of electronic displays to provide testimony related to Respondents' non- infringement defenses and technical prong of the domestic industry requirement defenses. Tr. (Neikirk) at 643:24-791:6 (expert qualification at 643:24-16). Respondents' next and last expert witness was Mr. Robert Smith-Gillespie, who was admitted as an expert in the field of electronic displays, including thermal management associated with electronic displays, to provide testimony related to Respondents' invalidity and unenforceability defenses. Tr. (Smith-Gillespie) at 918:2-1117:22 (expert qualification at 922:5-18); Tr. at 1302:19-1303:7 (admitting Mr. Smith-Gillespie as an expert).

#### 4. Deposition Designations

Several designated deposition transcripts were received into evidence: SEA employee David Phelps (CX-1895C); Palmer owner and corporate representative John Palmer (CX-1902C); Coates director of supply chain and corporate representative Yijie Li (CX-1905C); former MRI employee D. Ware Bedell, II (CX-1907C, RX-1414C); SEC engineer and Samsung Electronics corporate representative Sungsu Lee (CX-1908C); SEC engineer and Samsung Electronics corporate representative Wunkil Lee (CX-1909C); SEC engineer and Samsung Electronics corporate representative Jongpil Seo (CX-1911C); SEC senior manager and Samsung Electronics corporate representative Byung Gun Min (CX-1914C); SEA senior director and Samsung Electronics corporate representative Roy Celani (CX-1915C); SEC engineer Ji-Su Kim (CX-1916C); former Samsung Electronics engineer Sung Ki Kim (CX-1917C, RX-1427C); MRI vice president and corporate representative Michael Brown (RX-1416C); former American Panel Corporation employee Juho Chong (RX-1417C), MRI founder and CEO and corporate representative William Dunn (RX-1419C, RX-1420C, RX-1421C, RX-1432C); patent

prosecution attorney Mark Engle (RX-1422C); MRI director of product engineering and corporate representative Timothy Hubbard (RX-1424C), Vertigo Digital Displays founder Ralph Idems (RX-1425C), Standley Law Group LLP founder and corporate representative Jeffrey Standley (RX-1429C); and member of the Board of Directors at MRI and corporate representative David Williams (RX-1433C, RX-1434C, RX-1435C). *See* Tr. at 560:12-20 (admitting deposition designations and associated exhibits).

## II. JURISDICTION AND IMPORTATION

### A. Personal Jurisdiction

Respondents have submitted to the personal jurisdiction of the Commission by answering the Complaint and Notice of Investigation, participating in discovery, appearing at hearings, and filing motions and briefs. *See Certain Miniature Hacksaws*, Inv. No. 337-TA-237, USITC Pub. No. 1948, Initial Determination at 4, 1986 WL 379287, *1 (Oct. 15, 1986), *unreviewed in relevant part by* Comm'n Action and Order, 1987 WL 450871 (Jan. 15, 1987). Respondents do not dispute the Commission's personal jurisdiction over them this investigation. *See* RIB at 12.

### B. Jurisdiction and Importation

The Commission has *in rem* jurisdiction over the accused products by virtue of their importation into the United States. *See Sealed Air Corp. v. U.S. Int'l Trade Comm'n*, 645 F.2d 976, 985-86 (C.C.P.A. 1981) (holding that the Commission's jurisdiction over imported articles is sufficient to exclude such articles). Respondents have stipulated to the importation of the Accused Products. *See* JX-0011C ¶ 9 (Coates); JX-0012C ¶ 4 (Palmer); JX-0013C ¶ 4 (Samsung



SEC et al. v. MRI
SEC Exhibit 1048.019
IPR2023-00220

Electronics); JX-0014C ¶ 8 (Samsung SDS).[3] Respondents do not dispute the Commission's *in rem* jurisdiction in this investigation. *See* RIB at 12.

## III. LEGAL STANDARDS

### A. Infringement

Section 337(a)(1)(B)(i) prohibits "[t]he importation into the United States, the sale for importation, or the sale within the United States after importation by the owner, importer, or consignee, of articles that—(i) infringe a valid and enforceable United States patent or a valid and enforceable United States copyright registered under title 17[.]" 19 U.S.C. § 1337(a)(1)(B)(i). The Commission has held that the word "infringe" in Section 337(a)(1)(B)(i) "derives its legal meaning from 35 U.S.C. § 271, the section of the Patent Act that defines patent infringement." *Certain Elec. Devices with Image Processing Sys., Components Thereof, & Associated Software*, Inv. No. 337-TA-724, Comm'n Op. at 13-14, EDIS Doc. ID 467105 (Dec. 21, 2011).

Infringement must be proven by a preponderance of the evidence. *SmithKline Diagnostics, Inc. v. Helena Labs. Corp.*, 859 F.2d 878, 889 (Fed. Cir. 1988). The preponderance of the evidence standard "requires proving that infringement was more likely than not to have

[3] Palmer affirmatively stipulated that it "has sold after importation in the United States at least one unit of at least one Subject Product identified in Exhibit A" and that Palmer does not dispute that the importation requirement of 19 U.S.C. 1337(a)(1)(B) is met. JX-0012C ¶ 4. As the Subject Products are defined in the stipulation, they are two of the Accused Samsung Mid-Sized Products and certain Palmer products. *Id.* Ex. A. Coates also affirmatively stipulated that it "has sold after importation at least one unit of each Subject Product identified in Exhibit A" and does not dispute that the importation requirement of 19 U.S.C. 1337(a)(1)(B) is met. JX-0011C ¶ 8. As the Subject Products are defined in the stipulation, they are three of the Accused Samsung Mid-Sized Products and certain Coates products. *Id.* Ex. A. Accordingly, Palmer and Coates have both stipulated to sale after importation of, *inter alia*, the Accused Samsung Mid-Sized Products.



SEC et al. v. MRI
SEC Exhibit 1048.020
IPR2023-00220

occurred." *Warner-Lambert Co. v. Teva Pharms. USA, Inc.*, 418 F.3d 1326, 1341 n.15 (Fed. Cir. 2005).

### 1. Claim Construction

"An infringement analysis entails two steps. The first step is determining the meaning and scope of the patent claims asserted to be infringed. The second step is comparing the properly construed claims to the device accused of infringing." *Markman v. Westview Instruments, Inc.*, 52 F.3d 967, 976 (Fed. Cir. 1995) (*en banc*), *aff'd*, 517 U.S. 370 (1996) (citation omitted). "[T]he construction of claims is simply a way of elaborating the normally terse claim language[] in order to understand and explain, but not to change, the scope of the claims." *Embrex, Inc. v. Serv. Eng'g Corp.*, 216 F.3d 1343, 1347 (Fed. Cir. 2000) (alterations in original) (quoting *Scripps Clinic v. Genentech, Inc.*, 927 F.2d 1565, 1580 (Fed. Cir. 1991)). "[O]nly those [claim] terms need be construed that are in controversy, and only to the extent necessary to resolve the controversy." *Vivid Techs., Inc. v. Am. Sci. & Eng'g, Inc.*, 200 F.3d 795, 803 (Fed. Cir. 1999). The words of a claim "'are generally given their ordinary and customary meaning,'" which is "the meaning that the term would have to a person of ordinary skill in art" as of the date that the patent application was filed. *Phillips v. AWH Corp.*, 415 F.3d 1303, 1312-13 (Fed. Cir. 2005) (*en banc*) (quoting *Vitronics Corp. v. Conceptronic, Inc.*, 90 F.3d 1576, 1582 (Fed. Cir. 1996)).

### 2. Direct and Indirect Infringement

A patent claim is directly infringed when a respondent "makes, uses, offers to sell, or sells any patented invention, within the United States, or imports into the United States any patented invention" without consent of the patent owner. 35 U.S.C. § 271(a).

In addition to direct infringement, a respondent may be liable for indirect infringement, including induced infringement, which is defined in section 271(b) of the Patent Act: "[w]hoever actively induces infringement of a patent shall be liable as an infringer." 35 U.S.C. § 271(b);*see also DSU Med. Corp. v. JMS Co., Ltd.*, 471 F.3d 1293, 1305 (Fed. Cir. 2006) (*en banc*) ("To establish liability under section 271(b), a patent holder must prove that once the defendants knew of the patent, they actively and *knowingly* aid[ed] and abett[ed] another's direct infringement.") (citations omitted) (alterations in original) (emphasis in original). "The mere knowledge of possible infringement by others does not amount to inducement; specific intent and action to induce infringement must be proven." *DSU Med.*, 417 F.3d at 1305 (internal quotation marks and citation omitted). The Supreme Court has held that induced infringement "requires knowledge that the induced acts constitute patent infringement." *Global-Tech Appliances, Inc. v. SEB S.A.*, 563 U.S. 754, 766 (2011). In *Suprema, Inc. v. International Trade Commission*, the Federal Circuit upheld the Commission's interpretation of the section 337 language "articles that infringe" in the context of induced infringement, holding that the statute "covers goods that were used by an importer to directly infringe post-importation as a result of the seller's inducement." 796 F.3d 1338, 1352-53 (Fed. Cir. 2015) (*en banc*).

Another form of indirect infringement is contributory infringement, defined in section 271(c) of the Patent Act: "[w]hoever offers to sell . . . or imports into the United States a component of a patented machine, . . . or a material or apparatus for use in practicing a patented process, constituting a material part of the invention, knowing the same to be especially made or especially adapted for use in an infringement of such patent, and not a staple article or commodity of commerce suitable for substantial noninfringing use, shall be liable as a contributory infringer." 35 U.S.C. § 271(c). The intent requirement for contributory

infringement requires that respondent knows "that the combination for which [the] component was especially designed was both patented and infringing." *Global-Tech*, 563 U.S. at 763 (internal quotation marks omitted). A violation of section 337 based on contributory infringement requires that "the accused infringer imported, sold for importation, or sold after importation within the United States, the accused components that contributed to another's direct infringement." *Spansion, Inc. v. Int'l Trade Comm'n*, 629 F.3d 1331, 1353 (Fed. Cir. 2010).

#### 3. Literal Infringement and the Doctrine of Equivalents

A complainant must prove either literal infringement or infringement under the doctrine of equivalents. Literal infringement requires the patentee to prove that the accused device meets each and every limitation of the asserted claim(s). *Frank's Casing Crew & Rental Tools, Inc. v. Weatherford Int'l, Inc.*, 389 F.3d 1370, 1378 (Fed. Cir. 2004). "If even one limitation is missing or not met as claimed, there is no literal infringement." *Elkay Mfg. Co. v. EBCO Mfg. Co.*, 192 F.3d 973, 980 (Fed. Cir. 1999) (internal quotation marks omitted). Literal infringement is a question of fact. *Finisar Corp. v. DirecTV Grp., Inc.*, 523 F.3d 1323, 1332 (Fed. Cir. 2008). Under the doctrine of equivalents, "a product or process that does not literally infringe upon the express terms of a patent claim may nonetheless be found to infringe if there is 'equivalence' between the elements of the accused product or process and the claimed elements of the patented invention." *Warner-Jenkinson Co. v. Hilton Davis Chem. Co.*, 520 U.S. 17, 21 (1997).

### B. Invalidity

It is the respondents' burden to prove invalidity, and the burden of proof never shifts to the patentee to prove validity. *Scanner Techs. Corp. v. ICOS Vision Sys. Corp. N.V.*, 528 F.3d 1365, 1380 (Fed. Cir. 2008). "Under the patent statutes, a patent enjoys a presumption of validity, *see* 35 U.S.C. § 282, which can be overcome only through facts supported by clear and

convincing evidence[.]" *SRAM Corp. v. AD-II Eng'g, Inc.*, 465 F.3d 1351, 1357 (Fed. Cir. 2006); *see also Microsoft Corp. v. i4i Ltd. P'ship*, 564 U.S. 91, 100-114 (2011) (upholding the "clear and convincing" standard for invalidity).

The clear and convincing evidence standard placed on the party asserting an invalidity defense requires a level of proof beyond the preponderance of the evidence. Although not susceptible to precise definition, "clear and convincing" evidence has been described as evidence that produces in the mind of the trier of fact "an abiding conviction that the truth of a factual contention is 'highly probable.'" *Price v. Symsek*, 988 F.2d 1187, 1191 (Fed. Cir. 1993) (quoting *Buildex, Inc. v. Kason Indus., Inc.*, 849 F.2d 1461, 1463 (Fed. Cir. 1988)).

**1. Anticipation**

Pursuant to 35 U.S.C. § 102, a patent claim is invalid as anticipated if:

> (a) the invention was known or used by others in this country, or patented or described in a printed publication in this or a foreign country, before the invention thereof by the applicant for patent, or
>
> (b) the invention was patented or described in a printed publication in this or a foreign country or in public use or on sale in this country, more than one year prior to the date of the application for patent in the United States, or
>
> ***
>
> (e) the invention was described in — (1) an application for patent, published under section 122(b), by another filed in the United States before the invention by the applicant for patent or (2) a patent granted on an application for patent by another filed in the United States before the invention by the applicant for patent, except that an international application filed under the treaty defined in section 351(a) shall have the effects for the purposes of this subsection of an application filed in the United States only if the international application designated the United States and was published under Article 21(2) of such treaty in the English language.

35 U.S.C. § 102 (2002).[4] "A patent is invalid for anticipation if a single prior art reference discloses each and every limitation of the claimed invention. Moreover, a prior art reference may anticipate without disclosing a feature of the claimed invention if that missing characteristic is necessarily present, or inherent, in the single anticipating reference." *Schering Corp. v. Geneva Pharms., Inc.*, 339 F.3d 1373, 1377 (Fed. Cir. 2003) (citations omitted).

**2. Obviousness**

Section 103 of the Patent Act states, *inter alia*:

> (a) A patent may not be obtained though the invention is not identically disclosed or described as set forth in section 102 , if the differences between the subject matter sought to be patented and the prior art are such that the subject matter as a whole would have been obvious at the time the invention was made to a person having ordinary skill in the art to which said subject matter pertains. Patentability shall not be negatived by the manner in which the invention was made.
>
> ***
>
> (c)(1) Subject matter developed by another person, which qualifies as prior art only under one or more of subsections (e), (f), and (g) ofsection 102, shall not preclude patentability under this section where the subject matter and the claimed invention were, at the time the claimed invention was made, owned by the same person or subject to an obligation of assignment to the same person.

35 U.S.C. § 103(a) (2004).[5]

"Obviousness is a question of law based on underlying questions of fact." *Scanner Techs.*, 528 F.3d at 1379. The underlying factual determinations include: "(1) the scope and content of the prior art, (2) the level of ordinary skill in the art, (3) the differences between the claimed invention and the prior art, and (4) objective indicia of non-obviousness." *Id.* at 1380

[4] The pre-AIA version of 35 U.S.C. § 102 is applicable to the Asserted Patents. *See* Leahy-Smith America Invents Act, Pub. L. No. 112-29, § 3(n)(1), 125 Stat. 284, 293 (Sept. 16, 2011).

[5] The pre-AIA version of 35 U.S.C. § 103 is applicable to the Asserted Patents. *See supra* n.4.

(citing *Graham v. John Deere Co.*, 383 U.S. 1, 17 (1966)). These factual determinations are often referred to as the "*Graham* factors."

A critical inquiry in determining the differences between the claimed invention and the prior art is whether there is a reason to combine the prior art references. *KSR Int'l Co. v. Teleflex Inc.*, 550 U.S. 398, 418-21 (2007). In *KSR*, the Supreme Court rejected the Federal Circuit's rigid application of a "teaching-suggestion-motivation" test—while the Court stated that "it can be important to identify a reason that would have prompted a person of ordinary skill in the relevant field to combine the elements in the way the claimed new invention does," it described a more flexible analysis:

> Often, it will be necessary for a court to look to interrelated teachings of multiple patents; the effects of demands known to the design community or present in the marketplace; and the background knowledge possessed by a person having ordinary skill in the art, all in order to determine whether there was an apparent reason to combine the known elements in the fashion claimed by the patent at issue . . . . As our precedents make clear, however, the analysis need not seek out precise teachings directed to the specific subject matter of the challenged claim, for a court can take account of the inferences and creative steps that a person of ordinary skill in the art would employ.

*Id.* at 418. Applying *KSR*, the Federal Circuit has held that, where a patent challenger contends that a patent is invalid for obviousness based on a combination of prior art references, "the burden falls on the patent challenger to show by clear and convincing evidence that a person of ordinary skill in the art would have had reason to attempt to make the composition or device . . . and would have had a reasonable expectation of success in doing so." *PharmaStem Therapeutics, Inc. v. ViaCell, Inc.*, 491 F.3d 1342, 1360 (Fed. Cir. 2007).

In addition to demonstrating that a reason exists to combine prior art references, the challenger must demonstrate that the combination of prior art references discloses all of the limitations of the claims. *Hearing Components, Inc. v. Shure Inc.*, 600 F.3d 1357, 1373-1374

(Fed. Cir. 2010) (upholding finding of non-obviousness based on substantial evidence that the asserted combination of references failed to disclose a claim limitation), *abrogated on other grounds by Nautilus, Inc. v. Biosig Instruments, Inc.*, 572 U.S. 898 (2014); *Velander v. Garner*, 348 F.3d 1359, 1363 (Fed. Cir. 2003) (explaining that a requirement for a finding of obviousness is that "all the elements of an invention are found in a combination of prior art references").

**3. Written Description**

Under 35 U.S.C. § 112, ¶ 1, the specification must provide a written description of the claimed invention that "reasonably conveys to those skilled in the art that the inventor had possession of the claimed subject matter as of the filing date." *Ariad Pharms., Inc. v. Eli Lilly & Co.*, 598 F.3d 1336, 1351 (Fed. Cir. 2010) (*en banc*). Determining whether the written description requirement has been satisfied "requires an objective inquiry into the four corners of the specification from the perspective of a person of ordinary skill in the art[]" to determine whether the specification "show[s] that the inventor actually invented the invention claimed." *Id.*

**4. Inventorship**

A patent is invalid under pre-AIA 35 U.S.C. § 102(f) if it fails to name the proper inventors. *See* 35 U.S.C. § 102(f) ("A person shall be entitled to a patent unless . . . he did not himself invent the subject matter sought to be patented."); *In re VerHoef*, 888 F.3d 1362, 1365 (Fed. Cir. 2018). Inventorship is a question of law based on underlying factual determinations. *Dana-Farber Cancer Inst., Inc. v. Ono Pharm. Co., Ltd.*, 964 F.3d 1365, 1370 (Fed. Cir. 2020).

An inventor is one "who conceived the subject matter at issue." *In re VerHoef*, 888 F.3d at 1365 (quoting *Sewall v. Walters*, 21 F.3d 411, 415 (Fed. Cir. 1994)); *see also Univ. of Pittsburgh v. Hedrick*, 573 F.3d 1290, 1297 (Fed. Cir. 2009) ("Conception is the touchstone of

inventorship . . . ."). "The test for conception is whether the inventor had an idea that was definite and permanent enough that one skilled in the art could understand the invention." *Univ. of Pittsburgh*, 573 F.3d at 1298. In contrast, "[o]ne who merely suggests an idea of a result to be accomplished, rather than means of accomplishing it, is not a joint inventor." *Nartron Corp. v. Schukra U.S.A. Inc.*, 558 F.3d 1352, 1359 (Fed. Cir. 2009) (internal quotation marks omitted) (citation omitted) (alteration in original); *see also StoneEagle Servs., Inc. v. Gillman*, 746 F.3d 1059, 1063 (Fed. Cir. 2014) ("This court has stated that assistance in reducing an invention to practice generally does not contribute to inventorship."). A party must prove incorrect inventorship by clear and convincing evidence and "must provide evidence to corroborate the alleged joint inventor's conception[.]" *Eli Lilly & Co. v. Aradigm Corp.*, 376 F.3d 1352, 1358 (Fed. Cir. 2004); *see also Ethicon, Inc. v. U.S. Surgical Corp.*, 135 F.3d 1456, 1461 (Fed. Cir. 1998) (finding that "an alleged co-inventor must supply evidence to corroborate his testimony[]" regarding conception).

### C. Other Affirmative Defenses

#### 1. Inequitable Conduct

Inequitable conduct is a judicially created equitable defense to patent infringement. *Therasense, Inc. v. Becton, Dickinson & Co.*, 649 F.3d 1276, 1285 (Fed. Cir. 2011) (en banc). When a court determines that inequitable conduct has occurred as to one or more claims of a patent, the entire patent is rendered unenforceable. *Id*. at 1287 (citing *Kingsdown Med. Consultants, Ltd. v. Hollister Inc.*, 863 F.2d 867, 877 (Fed. Cir. 1988)). "Moreover, the taint of a finding of inequitable conduct can spread from a single patent to render unenforceable other related patents and applications in the same technology family." *Id*. (citing *Consol. Aluminum Corp. v. Foseco Int'l Ltd.*, 910 F.2d 804, 808-12 (Fed. Cir. 1990)).

Inequitable conduct generally requires a showing of (1) specific intent to deceive the Patent Office and (2) "but-for materiality," meaning that the patent would not have issued but for the misrepresentation or omission. *Therasense*, 649 F.3d at 1287, 1291. The Federal Circuit has also recognized an exception to the materiality requirement. "[A]ffirmative acts of egregious misconduct, such as the filing of an unmistakably false affidavit[]" have been held to be material. *Therasense*, 649 F.3d at 1292. In cases involving nondisclosure of information, "clear and convincing evidence must show that the applicant made a deliberate decision to withhold a known material reference." *Id.* at 1290 (internal quotation marks and emphases omitted).

To meet the clear and convincing standard required to prove unenforceability due to inequitable conduct, "the specific intent must be 'the single most reasonable inference able to be drawn from the evidence.'" *Therasense*, 649 F.3d at 1290 (quoting *Star Sci. Inc. v. R.J. Reynolds Tobacco Co.*, 537 F.3d 1357, 1366 (Fed. Cir. 2008)). Indeed, the evidence "'must be sufficient to *require* a finding of deceitful intent in the light of all the circumstances.'" *Id.* (quoting *Kingsdown*, 863 F.2d at 873) (emphasis in original).

**2. Unclean Hands**

The Supreme Court in *Keystone Driller Co. v. General Excavator Co.* articulated the legal standard governing the doctrine of unclean hands. *Gilead Scis., Inc. v. Merck & Co., Inc.*, 888 F.3d 1231, 1239 (Fed. Cir. 2018) (citing *Keystone Driller Co. v. General Excavator Co.*, 290 U.S. 240, 245 (1933)). "[T]he Court explained that a determination of unclean hands may be reached when 'misconduct' of a party seeking relief 'has immediate and necessary relation to the equity that he seeks in respect of the matter in litigation,' *i.e.*, 'for such violations of conscience as in some measure affect the equitable relations between the parties in respect of something brought before the court.'" *Id.* (quoting *Keystone Driller*, 290 U.S. at 245). A party asserting

unclean hands "bears the burden of proving by clear and convincing evidence that [the opposing party] acted with unclean hands." *In re Omeprazole Patent Litig.*, 483 F.3d 1364, 1374 (Fed. Cir. 2007).

**D. Domestic Industry**

In patent-based proceedings under section 337, a complainant must establish that an industry "relating to the articles protected by the patent . . . exists or is in the process of being established" in the United States. 19 U.S.C. § 1337(a)(2). Under Commission precedent, the domestic industry requirement of section 337 consists of a "technical prong" and an "economic prong." *See, e.g., Alloc, Inc. v. Intl Trade Comm'n,* 342 F.3d 1361, 1375 (Fed. Cir. 2003).

To meet the technical prong, the complainant must establish that it practices at least one claim of the asserted patent. *Certain Point of Sale Terminals & Components Thereof*, Inv. No. 337-TA-524, Order No. 40 at 17-18, EDIS Doc. ID 230409 (Apr. 11, 2005). "The test for satisfying the 'technical prong' of the industry requirement is essentially [the] same as that for infringement, *i.e.*, a comparison of domestic products to the asserted claims." *Alloc*, 342 F.3d at 1375.

With respect to the "economic prong," subsection (3) of Section 337(a) provides:

> For purposes of paragraph (2), an industry in the United States shall be considered to exist if there is in the United States, with respect to the articles protected by the patent, copyright, trademark, mask work, or design concerned –
>
> (A) significant investment in plant and equipment;
>
> (B) significant employment of labor or capital; or
>
> (C) substantial investment in its exploitation, including engineering, research and development, or licensing.

19 U.S.C. § 1337(a)(3).

Expenditures may be counted toward satisfaction of the domestic industry requirement "as long as those investments pertain to the complainant's industry with respect to the articles protected by the asserted IP rights." *Certain Television Sets, Television Receivers, Television Tuners, & Components Thereof*, Inv. No. 337-TA-910, Comm'n Op. at 68, 2015 WL 6755093, at *36 (Oct. 30, 2015); *accord, e.g., Certain Marine Sonar Imaging Devices, Including Downscan & Sidescan Devices, Prods. Containing the Same, & Components Thereof*, Inv. No. 337-TA-921, Comm'n Op., 2016 WL 10987364, at *40 (Jan. 6, 2016) ("Navico's allocation methodology reasonably approximates the warranty and technical customer support expenditures relating to the LSS-1 product.") (*citing Certain Ground Fault Circuit Interrupters & Prods. Containing Same*, Inv. No. 337-TA-739, Comm'n Op. at 74-75, 79-81 (June 8, 2012)). Subsections (A), (B), and (C) are listed in the disjunctive, and accordingly, the domestic industry investments in plant and equipment or labor and capital can include expenditures that relate to engineering or research and development. *Certain Solid State Storage Drives, Stacked Electronics Components, & Prods.s Containing Same*, Inv. No. 337-TA-1097, Comm'n Op. at 14, EDIS Doc. ID 649139 (June 29, 2018) ("[T]he text of the statute, the legislative history, and Commission precedent do not support narrowing subsections (A) and (B) to exclude non-manufacturing activities, such as investments in engineering and research and development.").

Whether a complainant satisfies the economic prong is not analyzed according to a rigid mathematical formula. *Certain Male Prophylactic Devices*, Inv. No. 337-TA-546, Comm'n Op. at 39, EDIS Doc. ID 279161 (Aug. 1, 2007). The decision is made on a case-by-case basis and requires "an examination of the facts in each investigation, the article of commerce, and the realities of the marketplace." *Id.* Although Section 337(a)(3) describes the economic activities as "significant" and "substantial," a complainant does not need to show any "minimum monetary

expenditure," and a complainant does not "need to define or quantify the industry itself in absolute mathematical terms." *Certain Stringed Musical Instruments & Components Thereof*, Inv. No. 337-TA-586, Comm'n Op. at 26, EDIS Doc. ID 300615 (May 16, 2008). "A precise accounting [of the complainant's domestic investments] is not necessary, as most people do not document their daily affairs in contemplation of possible litigation." *Id.*

## IV. THE ASSERTED PATENTS

The Asserted Patents are divided into the following three groups: 1) the '595 patent and the '322 patent; 2) the '287 patent; and 3) the '740 patent and the '142 patent. The Asserted Patents all claim priority to U.S. Provisional Patent Application No. 61/033,064 filed March 3, 2008 and U.S. Provisional Patent Application No. 61/039,454 filed March 26, 2008. CX-0068; JX-0079.

### A. The '595 Patent and the '322 Patent

The '595 patent (JX-0001) and the '322 patent (JX-0002) share a common specification and both name Mr. Dunn as the sole inventor. JX-0001 ("'595 patent") at cover; JX-0002 ("'322 patent") at cover. The '595 patent and the '322 patent are entitled "Constricted Convection Cooling System for an Electronic Display." *Id.* The '595 patent issued on October 7, 2014 from an application filed on March 26, 2009. '595 patent at cover. The '322 patent issued on October 27, 2015 from an application filed on October 7, 2014. '322 patent at cover. The '595 patent expires March 24, 2032. Amended Complaint ¶ 54. The '322 patent expires September 19, 2028. Amended Complaint, ¶ 60. The '322 patent is a continuation of the '595 patent. '322 patent at cover. MRI asserts that the '595 and '322 patents claim priority to provisional application No. 61/039,454, filed on March 26, 2008. CIB at 5; *see also* '595 patent at cover; '322 patent at cover.

### 1. Ownership

The undisputed evidence shows that on March 12, 2009, Mr. Dunn assigned the application leading to the ’595 patent and the application leading to the ’322 patent to MRI. CX-1986; CX-1987. Respondents have not disputed that MRI has standing to assert the ’595 patent and the ’322 patent as the owner and assignee of all rights of the ’595 patent and the ’322 patent. *See generally* RPB; RIB; RRB.

### 2. Specification

The ’595 patent and the ’322 patent describe cooling systems for electronic displays. ’595 patent at Abstract. The ’595 patent and the ’322 patent describe exemplary embodiments that “provide a constricted convection cooling system for an electronic display.” *Id.* at 3:54-56. Figure 3 is “an exemplary embodiment of the constricted convection plate 30.” *Id.* at 4:66-67.

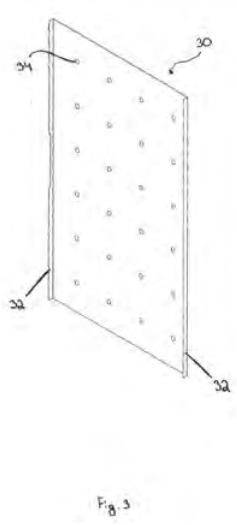


*Id.* at Fig 2. The embodiment of Figure 3 has angled side panels, 32, which are “adapted to extend from the constricted plate 30 and make contact with the display posterior 22 and direct air through the constricted convection channel 50 (shown in FIG. 5).” *Id.* at 5:1-5. Figure 3’s

embodiment also includes access apertures 34, which "are defined by the constricted convection plate 30 and allow access to hardware found on the display posterior 22; without the need to remove the constricted convection plate 30." *Id.* at 5:6-10.

Figures 5A-5F show several embodiments of the constricted convection system. *Id.* at 5:34-6:13. Figure 5A shows the constricted convection plate (30) mounted to the display posterior (22), potentially using mounting brackets (shown in Fig. 2). *Id.* at 5:34-37:

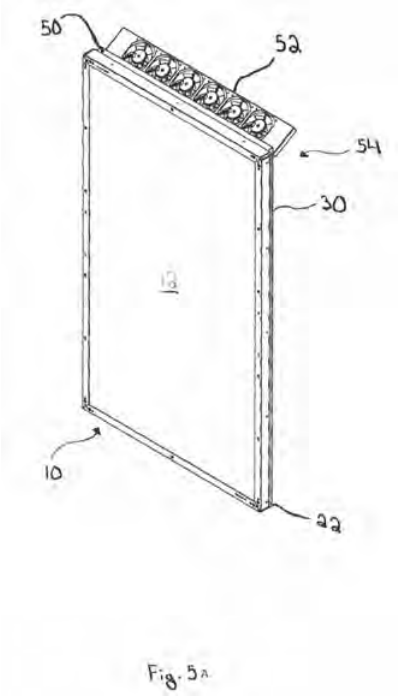


*Id.* at Fig. 5A. "The constricted convection plate 30 and the display posterior define a constricted convection cooling channel 50 immediately behind the display posterior 22." *Id.* at 5:37-39. Figures 5B through 5F show additional embodiments for the constricted convection system. *Id.* at 6:1-2; Figs. 5B-5F.

### 3. Asserted Claims

MRI asserts that Respondents infringe claims 1, 4, 7, and 8 of the ’595 patent. CIB at 20. Claims 1, 4, 7, and 8 are reproduced below:[6]

> 1[a]. A system for cooling an electronic display having a posterior display surface and contained within a housing, the system comprising:
>
> > [b] a constricted convection plate placed posterior to the posterior display surface;
> >
> > [c] two side panels placed adjacent to the constricted convection plate and the posterior display surface,
> >
> > [d] defining a constricted convection channel having an entrance and an exit; and
> >
> > [e] a fan placed to draw air from outside of the housing through the constricted convection channel.
>
> 4[a]. A liquid crystal display (LCD) comprising:
>
> > [b] a liquid crystal stack;
> >
> > [c] a backlight assembly behind the liquid crystal stack and comprising:
> >
> > > [d] a metal core printed circuit board (PCB) having front and back sides;
> > >
> > > [e] a plurality of LEDs mounted on the front side of the PCB;
> > >
> > > [f] a posterior surface on the rear side of the PCB;
> >
> > [g] a constricted convection plate placed behind the posterior surface of the PCB, defining a constricted convection channel having an entrance and an exit; and
> >
> > [h] a fan positioned to draw air through the constricted convection channel.

[6] MRI and Respondents use different identifiers to refer to the claim limitations. *Compare* CIB at 21-48, *with* RRB at xiii-xiv. The undersigned uses MRI’s identifiers for the ’595 patent and the ’322 patent.

7. The LCD from claim 4 wherein:

the fan is placed near the exit of the constricted convection channel.

8. The LCD from claim 4 further comprising:

a plurality of access apertures through the constricted convection plate.

MRI asserts that it practices claims 1, 4, 7, and 9 of the ’595 patent for purposes of the domestic industry requirement. CIB at 111-16. Claims 1, 4, and 7 are reproduced above. Claim 9 of the ’595 patent reads:

9[pre]. A system for cooling an electronic display comprising:

[a] an electronic display comprising a front display surface and a posterior surface;

[b] a constricted convection plate and a pair of sidewalls behind the posterior surface of the display, defining a constricted convection channel having an entrance and exit;

[c] a gaseous closed loop traveling across the front display surface, behind the constricted convection plate, and returning to the front display surface;

[d] a means for propelling gas around the closed loop;

[e] a means for cooling the gas in the closed loop; and

[f] a means for forcing air through the constricted convection channel.

MRI asserts that Respondents infringe claims 4, 5, 8, 9, 12, and 13 of the ’322 patent. CIB at 48-59. Claims 4, 5, 8, 9, 12, and 13 are reproduced below:

4[a]. A liquid crystal display (LCD) comprising:

[b] a liquid crystal stack;

[c] a backlight assembly behind the liquid crystal stack and comprising:

[d] a printed circuit board (PCB) having front and back sides;

[e] a plurality of LEDs mounted on the front side of the PCB;

[f] a posterior surface on the rear side of the PCB;

[g] a constricted convection plate placed behind and substantially parallel with the posterior surface of the PCB; and

[h] a fan positioned to draw air between the constricted convection plate and the posterior surface.

5. The LCD from claim 4 further comprising:

at least one bracket which connects the posterior surface with the constricted convection plate.

8. The LCD from claim 4 further comprising:

a plurality of access apertures on the constricted convection plate.

9[a]. A system for cooling an electronic display comprising:

[b] an electronic display comprising a front display surface and a posterior surface where no electronics are mounted to the posterior surface of the electronic display;

[c] a constricted convection plate behind the posterior surface of the display covering a majority of the posterior display surface; and

[d] a means for forcing air between the constricted convection plate and the posterior surface of the electronic display.

12[a]. The cooling system from claim 9 further comprising:

[b] a housing which contains the electronic display, constricted convection plate, and means for forcing air; and

[c] an entrance aperture within the housing which permits external ambient air to enter the housing and flow between the constricted convection plate and the posterior surface.

13. The cooling system from claim 12 wherein:

> the means for forcing air between the constricted convection plate and the posterior surface of the electronic display comprises a plurality of fans placed near the entrance aperture.

MRI asserts that it practices claims 3, 4, 5, and 9 of the ’322 patent for purposes of the domestic industry requirement. CIB at 116-18. Claims 4, 5, and 9 are reproduced above. Claim 3 of the ’322 patent, which depends from independent claim 1, reads:

> 1[a]. A system for cooling an electronic display having a posterior display surface and contained within a housing, the system comprising:
>
> > [1b] a constricted convection plate placed posterior to the posterior display surface covering the majority of the posterior display surface;
> >
> > [1c] at least one bracket which connects the posterior display surface with the constricted convection plate; and
> >
> > [1d] a fan placed to draw ambient air between the constricted convection plate and the rear posterior.
>
> 3. The cooling system from claim 1 wherein:
>
> > the constricted convection plate is substantially parallel to the posterior display surface.

**4. Claim Construction**

The parties agreed to the following constructions of certain claim terms in the ’595 patent and the ’322 patent:

| **Term or Phrase** | **Agreed Construction** |
|---|---|
| “A system for cooling an electronic display having a posterior display surface and contained within a housing, the system comprising” (’595 Patent, claim 1, preamble) | Preamble is limiting |
| “means for propelling gas around the closed loop” (’595 Patent, claims 9, 13) | § 112, ¶ 6; The recited function is “propelling gas around the closed loop” and the corresponding structure is a refrigeration unit or a plurality of fans |
| “means for cooling the gas in the closed loop” (‘’595 Patent, claim 9) | § 112, ¶ 6: The recited function is “cooling the gas in the closed loop.” The corresponding structure is a conditioning unit, |

| | |
|---|---|
| | a refrigeration unit, a thermoelectric unit, or any other device that decreases the temperature of the gas in the closed loop. |
| "means for forcing air through the constricted convection channel" ('595 Patent, claims 9, 6) | §112, ¶ 6: The recited function is "forcing air through the constricted convection channel." The corresponding structure to perform this function is one or more fans or an air conditioning unit. |
| "A system for cooling an electronic display having a posterior display surface and contained within a housing, the system comprising" ('322 Patent, claim 1, preamble) | Preamble is limiting |
| "substantially parallel" ('322 Patent, claims 3, 4) | "approximately parallel" |
| "means for forcing air between the constricted convection plate and the posterior surface of the electronic display" ('322 Patent, claims 9, 13) | § 112, ¶ 6: The recited function is "forcing air between the constricted convection plate and the posterior surface of the electronic display." The corresponding structure to perform this function is one or more fans or an air conditioning unit. |

Updated Joint Claim Construction Statement (EDIS Doc. ID 792078) at 2-3; *see also* CIB at 19-20.

In the *Markman* order, certain claim terms in the '595 patent and the '322 patent were construed as follows:

| **Term or Phrase** | **ALJ's Construction** |
|---|---|
| "a fan placed to draw air from outside of the housing through the constricted convection channel" ('595 Patent, claim 1)<br><br>"a fan positioned to draw air through the constricted convection channel" ('595 Patent, claim 4) | Plain and ordinary meaning, which does not require a fan positioned to pull air through and out of the constricted convection channel or through and out of the space that separates the constricted convection plate and the [rear posterior/posterior surface][7] |
| "a fan placed to draw ambient air between the constricted convection plate and the rear posterior" ('322 Patent, claim 1) | Plain and ordinary meaning, which does not require a fan positioned to pull air through and out of the constricted convection channel |

[7] In addition to the reasoning set forth in the *Markman* Order regarding this term, the undersigned further notes that the related '287 patent shows an embodiment with a fan that "draws air from outside the display housing" where the fan is located before the entrance to the constricted convection channel. *See* '287 patent (JX-0003) at 5:22-24 and Fig. 3C.

| | |
|---|---|
| "a fan positioned to draw air between the constricted convection plate and the posterior surface" ('322 Patent, claim 4) | or through and out of the space that separates the constricted convection plate and the [rear posterior/posterior surface] |
| "between" ('322 Patent, claims 1, 4, 9) | Plain and ordinary meaning; no construction necessary |
| "constricted convection plate" ('595 Patent: claims 1, 4, 8, 9; '322 Patent: claims 1, 3, 4, 5, 7, 8, 9, 12, 13) | "a plate configured to form part of a constricted convection channel" |
| "constricted convection channel" ('595 Patent: claims 1, 4, 7, 9, 16) | "a constricted channel through which air may flow to remove heat from the [posterior display surface/posterior surface]" |
| "posterior display surface" ('595 Patent: claim 1; '322 Patent, claim 3)<br><br>"posterior surface of the electronic display" ('322 Patent: claim 9) | "rear-facing surface of the display assembly" |

Order No. 13, EDIS Doc. ID 796384.

### B. The '287 patent

The '287 patent (JX-0003) names Mr. Dunn as the sole inventor. '287 patent, cover. The '287 patent is entitled "System for Using Constricted Convection with Closed Loop Cooling System as the Convection Plate." *Id.* The '287 patent issued on April 18, 2017 from an application filed on June 13, 2016. *Id.* The '287 patent expires September 19, 2028. Amended Complaint ¶ 66.

#### 1. Ownership

The undisputed evidence shows that in 2013, Mr. Dunn assigned the application leading to the '287 patent to MRI. CX-1988. Respondents have not disputed that MRI has standing to assert the '287 patent as the owner and assignee of all rights of the '287 patent. *See generally* RPB; RIB; RRB.

### 2. Specification

The ’287 patent describes electronic display assemblies wherein the display is cooled by a combination of airflows. ’287 patent, Abstract. Preferably, “the closed loop of isolated gas cools the front surface of the display while the open loop of ambient air cools the rear of the display.” *Id.*

Figure 1 of the ’287 patent, reproduced below, depicts an exemplary embodiment of the ’287 patent’s electronic display and gas cooling system 10 comprising isolated gas cooling chamber 20 contained within electronic display housing 70 and surrounding electronic display 80 and backlight panel 140. *Id.* at 3:51-60. A first gas chamber is defined by the space between spacers 100 and transparent front plate 90. *Id.* at 3:54-55. There can be a means for cooling gas, such as fan 60 which may be positioned at the base of the display housing 70, within the cooling plenum 45. *Id.* at 3:61-66. The air that contacts the external surface of the plenum 45 may be the same air that is forced between the backlight 140 and the surface of the plenum 45 to further cool the backlight. *Id.* at 4:1-3.

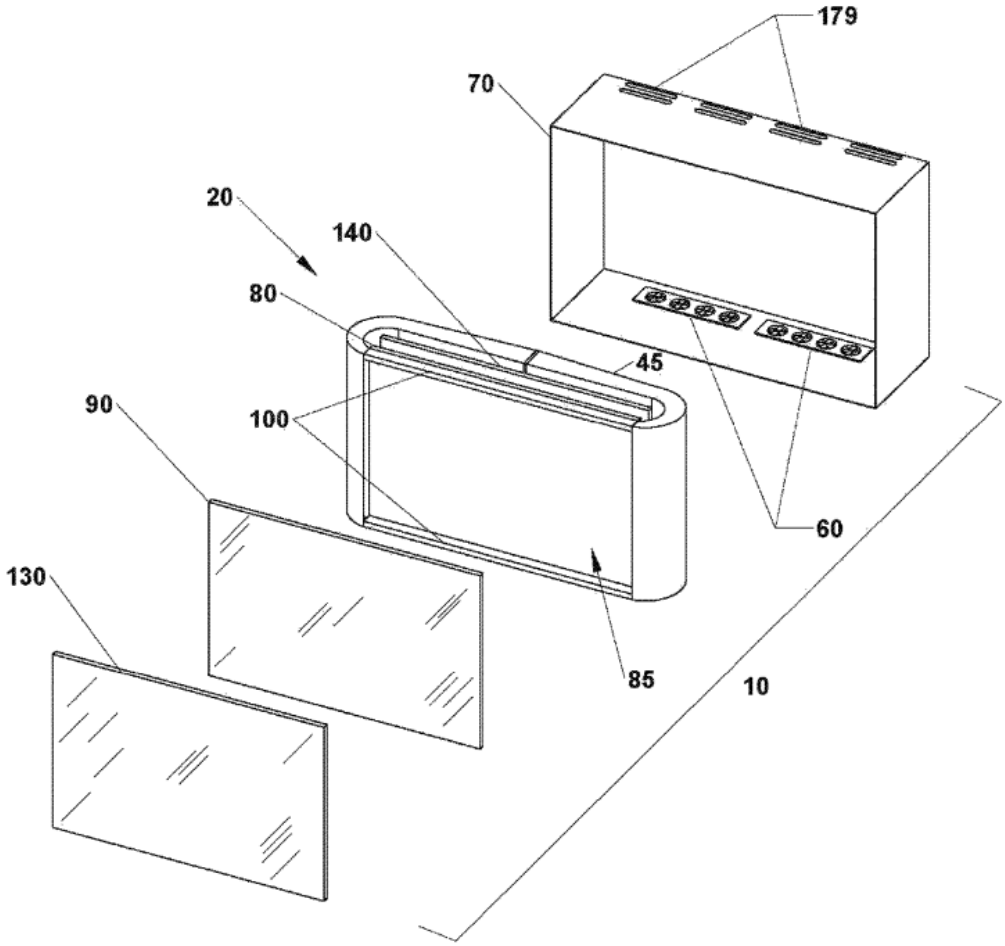


’287 patent, Fig. 1.

### 3. Asserted Claims

MRI asserts infringement of, and for the purpose of domestic industry that it practices, claim 12 of the ’287 patent:

> [12pre]. An electronic display assembly comprising:
>
> > [12a] a housing;
> >
> > [12b] a liquid crystal display (LCD) positioned within the housing and having a backlight;
> >
> > [12c] wherein the electronic display is coolable by a combination of a closed loop of isolated gas which

circulates within the housing and an open loop of ambient air which passes through the housing and along the backlight.

#### 4. Claim Construction

In the *Markman* order, certain claim terms in the ’287 patent were construed as follows:

| Term or Phrase | ALJ’s Construction |
|---|---|
| “closed loop” (’287 Patent: claims 1, 2, 4-8, 11, 12, 17-19, 21, 22) | “a gas pathway forming a complete loop within a display housing”[8] |
| “open loop of ambient air which passes through the housing and along the backlight” (’287 Patent: claim 12) | Plain and ordinary meaning |

### C. The ’740 Patent and the ’142 Patent

The ’740 patent (JX-0004) and the ’142 patent (JX-0005) share a common specification and both name Mr. Dunn and Mr. Tim Hubbard as inventors. ’740 patent, cover; ’142 patent, cover. The ’740 patent and the ’142 patent are entitled “Electronic Display with Cooling.” *Id.* ’595 patent issued on October 7, 2014 from an application filed on March 26, 2009. *Id.* The ’322 patent issued on October 27, 2015 from an application filed on October 7, 2014. *Id.* The ’595 patent expires March 24, 2032. Amended Complaint ¶ 54. The ’322 patent expires September 19, 2028. Amended Complaint, ¶ 60.

#### 1. Ownership

The undisputed evidence shows that in 2013, Mr. Dunn assigned the application leading to the ’740 patent and the application leading to the ’142 patent to MRI. CX-1989; CX-1990. Respondents have not disputed that MRI has standing to assert the ’740 patent and the ’142

[8] While the Markman Order adopted this as a tentative construction, the undersigned hereby adopts this as the final construction for purposes of this ID.

patent as the owner and assignee of all rights of the ’740 patent and the ’142 patent. *See generally* RPB; RIB; RRB.

### 2. Specification

The ’740 patent and the ’142 patent describe electronic displays including an electronic display assembly and a cooling system for the electronic image assembly, wherein a closed loop gas circulation path and an open loop ambient air flow path are provided to effectuate cooling. ’740 patent (JX-0004), Abstract. In an exemplary embodiment there are two separate flow paths, a closed loop path that travels across the front surface of the image assembly, continues to the rear of the display where it may enter a heat exchanger, and finally returns to the front surface of the image assembly, and an open loop path that that draws ambient gas through the rear of the display (whether through a heat exchanger, behind the image assembly, or both) and exhausts it out of the display housing. *Id.* at 2:37-47.

The figures reproduced below depict an embodiment with an electronic display 100 has a heat exchanger 101 with inlet and outlet closed loop fan assemblies 102 and 103 and inlet and outlet open loop fan assemblies 104 and 105. *Id.* at 3:17-38. The closed loop gas circulates around the display and, in so doing, passes through a channel 290 defined by the space between a front display surface 221 and the front of the image assembly 220, contacts the front surface of the image assembly, absorbs heat from the image assembly, is forced into the heat exchanger 101 to transfer heat to the ambient gas, and eventually returns to the channel and again contacts the front surface of the image assembly. *Id.* at 3:47-57, 4:1-14.

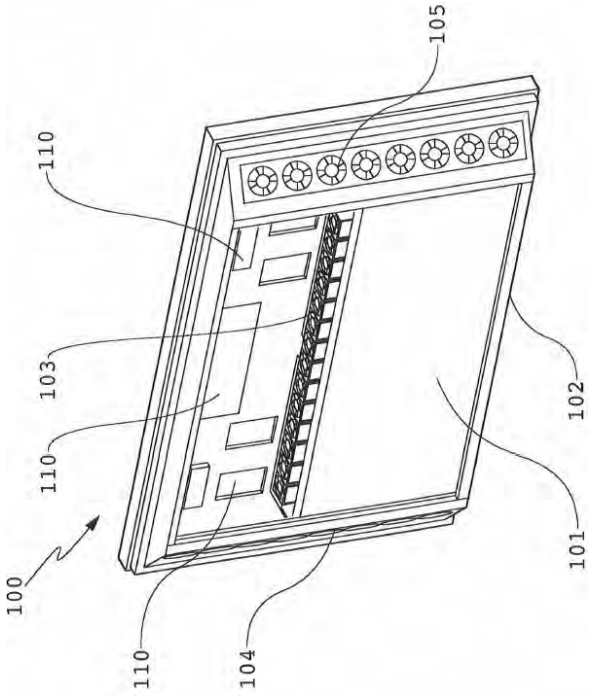


’740 patent, Figure 1.

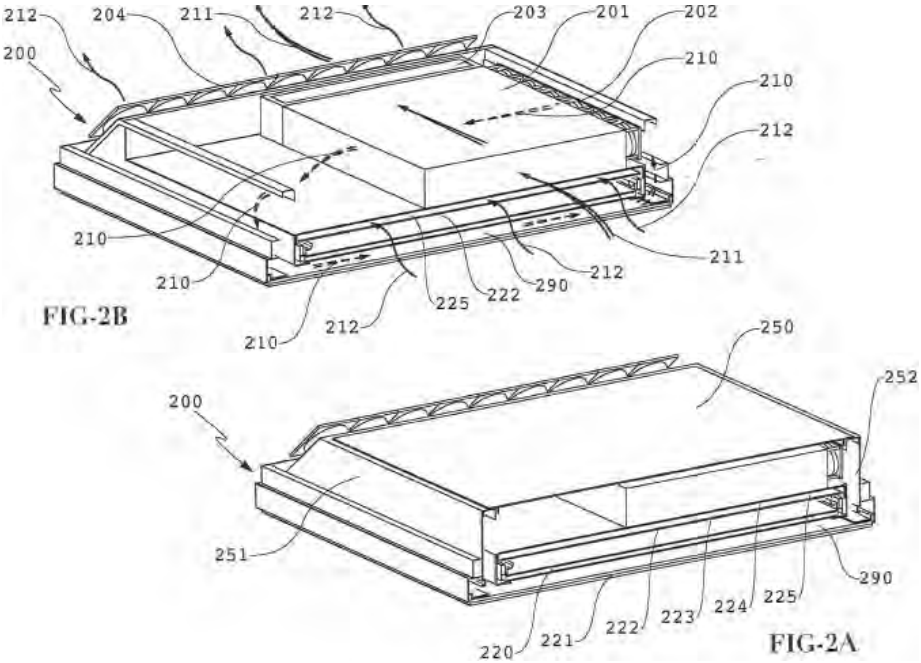


’740 patent, Figures 2A and 2B.

### 3. Asserted Claims

MRI asserts infringement of, and for the purpose of domestic industry that it practices, claims 1 and 5 of the ’740 patent:

> [1pre]. An electronic display comprising:
>
> > [1a] an electronic image assembly having a front portion and a rear portion;
> >
> > [1b] an open loop ambient air flow path behind the rear portion of the electronic image assembly;
> >
> > [1c] a closed loop gas circulation path about the electronic image assembly;
> >
> > [1d] a common heat exchanger located in the pathway of both the closed loop gas circulation path and the open loop ambient air flow path;
> >
> > [1e] a gas circulation device positioned to force circulating gas through the common heat exchanger; and
> >
> > [1f] an air circulation device positioned to force ambient air through the common heat exchanger.
>
> [5pre]. The electronic display of claim 1, further comprising:
>
> a front display surface spaced apart from the front portion of the electronic image assembly; and a front channel defined by the space between the front display surface and the front portion of the electronic image assembly, the front channel forming part of the closed loop gas circulation path.

MRI asserts claims 6 and 10 of the ’142 patent:

> [6pre]. A cooling system for an electronic image assembly, the cooling system comprising:
>
> > [6a] a housing for the electronic image assembly;
> >
> > [6b] a transparent cover panel forming a front portion of the housing, the transparent cover panel located forward of, and at least some distance from, the electronic image assembly;
> >
> > [6c] an open loop airflow pathway passing through the housing behind the electronic image assembly;

[6d] a closed loop gas circulation pathway contained within the housing, wherein a portion of said closed loop gas circulation pathway passes between said transparent cover panel and said electronic image assembly;

[6e] an inlet located at a first portion of said housing for ingesting ambient air into said open loop airflow pathway;

[6f] an exhaust located at a section portion of said housing for exhausting said ambient air from said open loop airflow pathway;

[6g] an air circulation device positioned along said open loop airflow pathway between said inlet and said exhaust, wherein said air circulation device is configured to force said ambient air through the open loop airflow pathway when activated;

[6h] a gas circulation device positioned along said closed loop gas circulation pathway to force circulating gas around the closed loop gas circulation pathway when activated;

[6i] a heat exchanger located rearward of the electronic image assembly; wherein a first portion of said heat exchanger forms part of said open loop airflow pathway, and wherein a second portion of said heat exchanger forms part of said closed loop gas circulation pathway; and

[6j] one or more solar energy reduction layers located at said transparent cover panel, wherein each of said one or more solar energy reduction layers is configured to prevent a portion of solar energy entering said transparent cover panel from thermally interacting with the circulating gas at said portion of said closed loop gas circulation pathway passing between said transparent cover panel and said electronic image assembly or thermally interacting with said electronic image assembly.

### 4. Claim Construction

In the *Markman* order, certain claim terms in the ‘740 patent and the ’142 patent were construed as follows:

| **Term or Phrase** | **ALJ’s Construction** |
|---|---|
| “closed loop” (’142 Patent: claims 1, 3, 6, 12, 15; ’740 Patent: claims 1, 5, 6, 8, 15, 16, 17, 20) | “a gas pathway forming a complete loop within a display housing” |

### D. Level of Ordinary Skill in the Art

In the *Markman* order, the undersigned determined that a person of ordinary skill in the art would have had a bachelor's degree in a pertinent discipline, such as mechanical or electrical engineering, physics, applied physics, or a related field. Such a person would also have had 2-4 years of experience in working with electronic displays including thermal management associated with electronic displays. Alternatively, a POSITA would have had 4-6 years of experience in the field and would have developed a similar understanding of thermal management associated with electronic displays. Order No. 13 at 19.

## V. INFRINGEMENT

### A. The '595 Patent

MRI alleges infringement of claim 1 of the '595 patent by the Accused Samsung Mid-Sized Products (including the Accused Coates Products and Accused Palmer Products that contain them). CIB at 20-21. MRI also alleges infringement of claims 4, 7, and 8 of the '595 patent by the Samsung Large-Sized Products. *Id.* at 34, 45. MRI also contends that Samsung induces infringement of claim 1 of the '595 patent. *Id.* at 20-21. Respondents dispute that they infringe claims 1, 4, 7, and 8 of the '595 patent. RIB at 18. Respondents also seek a finding of non-infringement with respect to certain non-accused products and/or products not accused of infringing certain claims.

For the reasons set forth below, MRI has proven infringement of claim 1 of the '595 patent by the Accused Samsung Mid-Sized Products. Further, MRI has proven that the Accused Samsung Large-Sized Products infringe claims 4 and 7 of the '595 patent but has not shown infringement of claim 8.

### 1. Claim 1

MRI contends that the Accused Samsung Mid-Sized Products (including the Accused Coates Products and Accused Palmer Products that contain them) infringe claim 1 of the ’595 patent. CIB at 20-21. MRI further contends that Samsung induces infringement of claim 1 of the ’595 patent. *Id.*

#### a. Accused Samsung Mid-Sized Products

(i) *Claim element [1a]: A system for cooling an electronic display having a posterior display surface and contained within a housing, the system comprising:*

The parties dispute whether the Accused Samsung Mid-Sized Products contain “a system for cooling an electronic display having a posterior display surface and contained within a housing[.]” In particular, the parties dispute whether the preamble of claim 1 requires the entire system for cooling to be “within a housing” or whether only the display needs to be contained within the housing, and also dispute what it means to be “within a housing.” CRB at 9-10; RIB at 19; RRB at 3. For the reasons set forth below, MRI has shown by a preponderance of the evidence that the Accused Samsung Mid-Sized Products contain “a system for cooling an electronic display having a posterior display surface and contained within a housing[.]”

It is undisputed that the Accused Samsung Mid-Sized Products contain a system for cooling an electronic display. As Mr. Credelle testified, Samsung installation guides illustrate that the Accused Samsung Mid-Sized Products have cooling systems. Tr. (Credelle) at 324:4-8; CX-2042.00005 (Accused Samsung Mid-Sized Products on the left side):

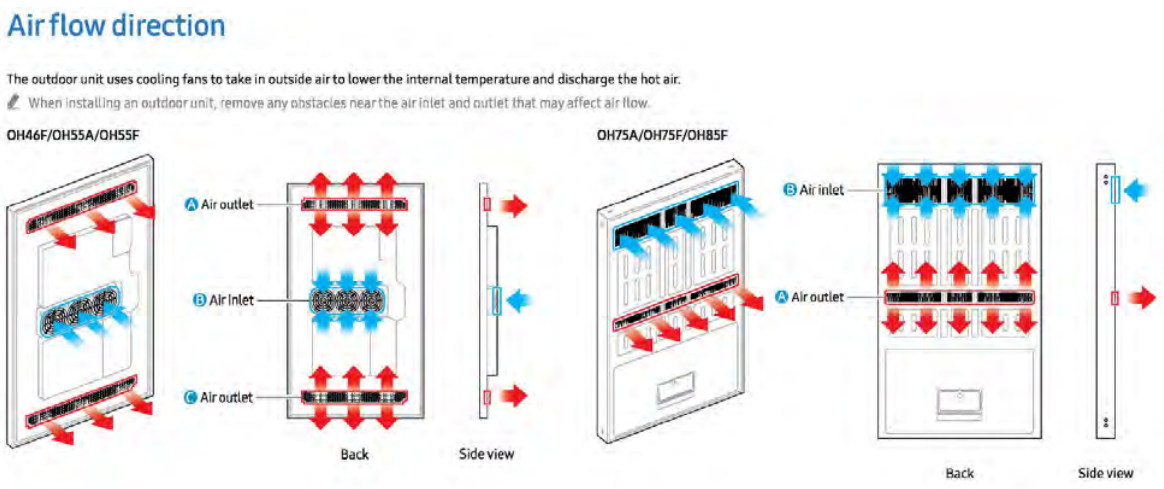


There is no material dispute about the structure of the Accused Samsung Mid-Sized Products. The undisputed evidence shows that the Accused Samsung Mid-Sized Products contain an electronic display having a posterior display surface: an LCD module. Mr. Credelle testified that each of the Accused Samsung Mid-Size Products contain an LCD module with a rear-facing surface, which is the posterior display surface. Tr. (Credelle) at 316:19-317:8, 323:23-324:3; CDX-0006C at 15, 36; JX-0119C.00001; JX-0120C.00001; JX-0128C.00001; JX-0132C.00001; *see also* Tr. (Neikirk) at 651:22-652:5 (analysis for one model of mid-sized products generally applies to all models).

As Mr. Credelle testified, and as the physical exhibits showed, the Accused Samsung Mid-Sized Products include several enclosure structures including a front enclosure structure with a bezel and side walls, and multiple rear enclosure structures, including an enclosure structure that covers the rear of the LCD module, and an enclosure structure (referred to by Mr. Credelle as the "rear cover") near the fans which covers certain circuit boards. Tr. (Credelle) at 324:4-18; CDX-0006C at 38-39; JX-0213C; *see also* RPX-0006A (below, left); RPX-0006B (below, right):

Samsung's documents also show two different rear pieces that enclose certain components, including a [redacted] and [redacted] (which Mr. Credelle identifies as the "rear cover"). JX-0208C.00070:

[redacted]

The [redacted] encloses the LCD and LCD module, and other panels. *Id.* The [redacted]. *Id.* Additionally, the [redacted] piece in Samsung's documents includes what Mr. Credelle refers to as the "front bezel" and "side walls." *Id.*

Although the parties agreed that the preamble was limiting during claim construction proceedings, they did not seek to construe this preamble further. *See* Updated Joint Claim Construction Statement (EDIS Doc. ID 792078). Accordingly, this term will be construed according to its plain and ordinary meaning.

Before and during the hearing, the parties and their experts analyzed this term at the hearing under an interpretation where the entire claimed system for cooling needed to be "contained within a housing." In post-hearing briefs, however, MRI argued that as a matter of grammar, only the electronic display needs to be contained within the housing. CRB at 9-10; CIB at 58. The undersigned agrees that the plain and ordinary meaning of this term requires only

the electronic display to be contained within the housing. This claim term reads "[a] system for cooling an electronic display having a posterior display surface and contained within a housing[.]" This claim limitation has two adjective phrases: "having a posterior surface" and "contained within a housing." As a matter of grammar and context, the phrase "having a posterior display surface" plainly modifies the "electronic display," not the entire system. It thus follows as a matter of grammar that the same is true for the second phrase, "contained within a housing[,]"—that it modifies the "electronic display." *See Finisar Corp. v. DirecTV Group, Inc.*, 523 F.3d 1323, 1336 (Fed. Cir. 2008) ("[r]eferential and qualifying words and phrases, where no contrary intention appears, refer solely to the last antecedent, which consists of the last word, phrase, or clause that can be made an antecedent without impairing the meaning of the sentence") (internal quotation marks and emphases omitted); CRB at 9-10. This interpretation is also consistent with the specification, which refers to embodiments with a display contained in a housing, while referring to cooling systems with components that may not be contained within a housing. *See* '595 patent at 7:2-3 ("The display 10 may be encased in an external housing 80."); *id.* at 6:38-39 (referencing "double display housing 60"); *id.* at 7:55-63 ("In other exemplary embodiments, a means for cooling air in gas communication with the entrance opening 62 may be employed . . . . The means for cooling air may be housed within the external housing 80, or it may be an external unit.").[9]

As discussed below, there is no dispute that the electronic display is contained within a "housing," no matter which party's interpretation of "housing" is adopted. Accordingly, this claim limitation is met by the Accused Samsung Mid-Sized Products under the proper claim

[9] This interpretation also appears to be the one applied by Respondents' expert, Mr. Smith-Gillespie, for purposes of invalidity for at least one prior reference. Tr. (Smith-Gillespie) at 931:1-11; RDX-0007.0019.

construction. Moreover, even under the parties' claim interpretation that the entire cooling system must be "contained within a housing," the Accused Samsung Mid-Sized Products contain a system for cooling contained within a housing.

Mr. Credelle and MRI point to the claimed "housing" as what Mr. Credelle referred to as the front bezel, side walls, and the [redacted]. Tr. (Credelle) at 325:15-326:11; *see also* CDX-0006C at 38-39:

[redacted]

[redacted]

Mr. Credelle does not include what he refers to as the "metal plate" (what Samsung's documents call [redacted]) as part of the claimed "housing." *Id.* Mr. Credelle opined that the entire claimed system for cooling is contained within the bounds of the front bezel, side walls, and rear cover, and therefore it is "contained within a housing[.]" Tr. (Credelle) at 325:15-326:11; *see also* CDX-0006C at 41:

[redacted]

By contrast, Respondents argue that "all external facing portions of the display are part of the housing." RIB at 20. Thus, in Respondents' view, the "housing" must include at least the metal plate/[redacted]. *Id.* Respondents further assert that "[t]he [redacted] cannot be both the

claimed housing and the claimed 'constricted convection plate' that is contained within the housing." RIB at 19. Dr. Neikirk testified that in his opinion, the [redacted] would be part of the housing. Tr. (Neikirk) at 655:10-16. But because Mr. Credelle identified portions of the metal plate/[redacted] as the constricted convection plate, Dr. Neikirk opines that the system for cooling cannot be "within a housing" because it is part of that housing. *Id.* at 655:17-657:18; RDX-0003C at 13:

[redacted]

The undisputed evidence shows that the electronic display is contained within the housing under either party's proposed meaning of "housing." Under MRI's position, the electronic display is contained within the bounds of the front bezel, side walls, and [redacted]. And under Respondents' position, the electronic display is contained within bounds of the front bezel, side walls, and externally-facing portions of the [redacted] and [redacted]. Accordingly, the Accused Samsung Mid-Sized Products meet this limitation under the proper construction of this claim limitation. *See* discussion *supra*.

Moreover, even under an alternative interpretation that requires the entire "system for cooling" to be contained within a housing, the Accused Samsung Mid-Sized Products provide a system for cooling contained within a housing.

As "housing" is used in the specification of the '595 patent, it refers to an enclosure for other (e.g., electronic) components. *E.g.*, '595 patent at 6:7-9, 6:14-16, 6:47-49, 7:1-3. Neither party disputes that the front bezel and side walls (what Samsung's documents refer to the [redacted]) are housing. *See* JX-0208C.0070:

[redacted]

But MRI argues that only the [redacted] is part of the housing, not the metal plate/[redacted], while Respondents argue that the metal plate/[redacted] is housing (although they are unclear about whether the entirety of the [redacted] is housing). CIB at 23; RIB at 20. Housing is not a term of art and can be understood under its plain and ordinary meaning. In this context, both the [redacted] and [redacted] form parts of the housing because the metal plate/[redacted] is a partially external structure that encloses at least the LCD module and associated electronics and the [redacted]. JX-0208C.00070. As Samsung's documents show, portions of the metal plate/[redacted] are

contained within the bounds of the [redacted], and do not face the external environment. *E.g.*, *id.* Moreover, the inner portion of the metal plate/[redacted] (that forms a border of the constricted convection channel) is contained within the outer, external-facing housing surfaces. *See* Tr. (Credelle) at 315:10-18, 317:9-319:5; CDX-6 at 12, 16-20. *Cf. Powell v. Home Depot U.S.A., Inc.*, 663 F.3d 1221, 1232 (Fed. Cir. 2011) (rear portion of a structure meeting a 'cutting box' limitation could meet a separate 'dust collection structure' limitation where the patent specification "does not suggest that the claim terms require separate structures"). Thus, under Respondents' argument that "housing" requires all external-facing housing portions, the system for cooling is contained within the bounds of the external housing structures.[10]

For these reasons, MRI has shown by a preponderance of the evidence that the Accused Samsung Mid-Sized Products contain "a system for cooling an electronic display having a posterior display surface and contained within a housing[.]"

(ii) *Claim element [1b]: a constricted convection plate placed posterior to the posterior display surface*

There is no dispute that the Accused Samsung Mid-Sized Products comprise a constricted convection plate placed posterior to the posterior display surface.[11] *See* RIB at 18-25 (not

[10] This is consistent with Respondents' arguments at the *Markman* hearing. As argued by Respondents at that hearing, claim 1 of the '595 patent requires "the system is contained within a housing," but "that doesn't mean that the housing needs to be physically distinct from the plate or the channel . . . Nothing in the claim or in the specification prohibits the plate or the channel from being part of or connected to the housing. You can envision many situations where a plate is adjacent to or embed in a housing . . . ." Tr. (Markman, Resp. counsel) at 74:8-75:3 (EDIS Doc. ID 791574). Respondents' *Markman* brief similarly argued that "for claim 1 of the '595 patent," there is no requirement "that the 'constricted convection plate' and the housing are distinct." Respondents' Opening Claim Construction Brief at 19 (EDIS Doc. ID 789175) (Feb. 1, 2023). The *Markman* Order held that the "housing" and the "constricted convection plate" of the '595 and '322 patents did not necessitate separate and distinct structures (although they must meet any added requirements of specific claims). *See* Order No. 13, at 39-40.

[11] Respondents' arguments regarding element [1a], *see* discussion *supra*, do not dispute that there is a constricted convection plate.

disputing this limitation for claim 1). During claim construction, "posterior display surface" was construed as "rear-facing surface of the display assembly." Order No. 13 at 42. And "constricted convection plate" was construed as "a plate configured to form part of a constricted convection channel." *Id.* at 40. Mr. Credelle explained based on his review of CAD files that the Accused Samsung Mid-Sized Products contain a constricted convection plate placed posterior to the posterior display surface (the [redacted] /metal plate and/or portions thereof) and explained how this piece is "configured to form part of a constricted convection channel" under the adopted construction for the term. Tr. (Credelle) at 326:25-328:6; JX-0213C; JX-0214C; JX-0215C; JX-0216C (all CAD files); CDX-0006C at 48. Accordingly, MRI has shown that the Accused Samsung Mid-Sized Products comprise a constricted convection plate placed posterior to the posterior display surface.

(iii) *Claim elements [1c] and [1d]: [1c] two side panels placed adjacent to the constricted convection plate and the posterior display surface, [1d] defining a constricted convection channel having an entrance and an exit; and*

The parties dispute whether the Accused Samsung Mid-Sized Panels comprise "two side panels placed adjacent to the constricted convection plate and the posterior display surface." *See* RIB at 24-25, RRB at 10. This dispute turns on whether the plain and ordinary meaning of "two side panels" encompasses the structure of the Accused Samsung Mid-Sized Products.

The undisputed evidence shows that the Accused Samsung Mid-Sized Products contain a [redacted] adjacent to what is alleged to be the constricted convection channel. Tr. (Credelle) at 332:3-333:16; CDX-0006C at 62; JX-0213C; JX-0214C; JX-0215C; JX-0216C (CAD files). In Mr. Credelle's demonstrative, [redacted] are on the top and bottom of the display. *Id.*

[redacted]

CDX-0006C at 62. Mr. Credelle also prepared a demonstrative showing the entrance to the channel, where the fans are located, and the exit, on the sides of the display. Tr. (Credelle) at 333:22-335:1; *see also* CDX-0006C at 71-72.

[redacted]

CDX-0006C at 71. Mr. Credelle opined that [redacted] are the two side panels. Tr. (Credelle) at 332:3-333:16. Dr. Neikirk, on the other hand, testified that a person of ordinary skill in the art would not consider [redacted]. Tr. (Neikirk) at 659:7-11.

As an initial matter, the evidence shows that the [redacted] define a constricted convection channel having an entrance and exit. As Mr. Credelle explained, [redacted] defines a constricted convection channel with an entrance and exit. Tr. (Credelle) at 333:24-335:1; *see also* CDX-0006C at 71-72 (showing the alleged constricted convection channel):

[redacted]

This satisfies the undersigned's construction of a constricted convection channel as "a constricted channel through which air may flow to remove heat from the posterior display surface" because it is a channel through which air may flow to remove heat from the posterior display surface. Dr. Neikirk and Respondents did not dispute that a constricted convection

channel is formed with an entrance and exit, but only contested that the channel was defined by "two side panels."

The undersigned finds that MRI has shown by a preponderance of the evidence that the Accused Samsung Mid-Sized Panels contain two side panels as required by element [1c]. Respondents' argument that the side panels cannot be part of a [redacted] imposes an additional requirement that is not supported by the '595 patent specification. The '595 patent specification provides an "exemplary embodiment" in which "angled side panels 32 are adapted to extend from the constricted convection plate 30 . . . and direct air through the constricted convection channel 50." '595 patent at 5:1-5. In this exemplary embodiment, both "side panels" are part of the same structure. *See* CIB at 32-33; *Linear Tech. Corp. v. Int'l Trade Comm'n*, 566 F.3d 1049, 1055 (Fed. Cir. 2009) (construing "second circuit" and "third circuit" to "not require entirely separate and distinct circuits"); CIB at 33. Respondents' interpretation of "two side panels" is unduly narrow and unsupported by the specification of the '595 patent. Under the plain and ordinary meaning, [redacted] satisfies the "two side panels" limitation.

Accordingly, MRI has shown that the Accused Samsung Mid-Sized Products comprise two side panels placed adjacent to the constricted convection plate and the posterior display surface, defining a constricted convection channel having an entrance and an exit.

(iv) *Claim element [1d]: a fan placed to draw air from outside of the housing through the constricted convection channel.*

There is no dispute that the Accused Samsung Mid-Sized Products comprise a fan placed to draw air from outside of the housing through the constricted convection channel. *See* RIB at 18-25 (not disputing this limitation for claim 1). During claim construction, the undersigned construed this limitation to have its plain and ordinary meaning. Order No. 13 at 20-29. Mr. Credelle reviewed the CAD drawings for the Accused Samsung Mid-Sized Products and images

from the teardowns, which showed they each include fans placed to draw air from outside of the housing through the asserted constricted convection channels. Tr. (Credelle) at 335:2-336:6; CDX-0006C at 76-78; JX-0206C.00108 (Samsung presentation); JX-0213C; JX-0214C; JX-0215C; JX-0216C (all CAD drawings); CX-0280.00002 (teardown image). Accordingly, MRI has shown that the Accused Samsung Mid-Sized Products comprise a fan placed to draw air from outside of the housing through the constricted convection channel.

***

MRI has therefore shown direct infringement of claim 1 of the ’595 patent by the Accused Samsung Mid-Sized Products.

**b. Induced Infringement (Palmer and Coates Enclosures)**

MRI also asserts that Samsung induces infringement of claim 1 by its customers, Coates and Palmer, by encouraging their use of enclosures. CIB at 26-27. MRI argues that “when the Accused Coates Products and Mid-Sized Products are used in the United States (e.g., as Accused Coates Products or Accused Palmer Products) they infringe even under Respondents’ proposed claim construction.”

It is unnecessary to reach this issue since, as discussed above, the Accused Samsung-Mid-Sized Products infringe without the added enclosures. However, to the extent MRI seeks to rely on a different “housing” (i.e., the “housing” of the Coates and/or Palmer enclosures), the evidence is insufficient to show induced infringement. In particular, MRI has cited no evidence and made no argument that Samsung knew that its acts constituted infringement. *See* CIB at 25-27.[12] MRI has not, for example, asserted that the service of the Complaint or any claim charts

[12] “[I]nduced infringement under § 271(b) requires knowledge that the induced acts constitute patent infringement.” *Global-Tech*, 563 U.S. at 766; *see also Commil USA, LLC v. Cisco Sys.*,

provided knowledge of the infringing nature.[13] Moreover, MRI's claim charts included with the Complaint are not substantially similar to the theory that is the basis of the inducement claim, in which the claimed "housing" is an external enclosure provided by Palmer or Coates. *See* EDIS Doc. ID 778357, Exs. 25, 28.[14] Instead, those charts assert the argument that the Accused Samsung Medium-Sized Products infringe on their own. MRI does not cite any evidence suggesting that Samsung knew that using Palmer's or Coates's enclosures would infringe claim 1 of the '595 patent based on a theory in which the claimed "housing" is an external Palmer or Coates enclosure. Accordingly, MRI has failed to make any arguments or showing of any evidence as to an essential element of their induced infringement claim.

**c. Non-Accused Products**

Samsung has sought an adjudication of non-infringement as to claim 1 of the '595 patent as to: (1) the "Non-Accused OM" products; and (2) the Samsung Large-Sized Products (which are accused products for certain asserted claims, but not for claim 1). *See* RIB at 35-36. As discussed in Order No. 21, the *Oligosaccharides* factors favor adjudication of these products.

---

*Inc.*, 575 U.S. 632, 640 (2015) ("*Global–Tech* requires more. It requires proof the defendant knew the acts were infringing. And the Court's opinion was clear in rejecting any lesser mental state as the standard."); *see* RIB at 22.

[13] The Commission's prior determinations have held that "service of a section 337 complaint can be adequate to provide knowledge of the asserted patents." *Certain Television Sets, Television Receivers, Television Tuners, & Components Thereof*, Inv. No. 337-TA-910, Comm'n Op. at 41, 2015 WL 6755093, at *23 (Public Version Oct. 30, 2015). In making that determination, the Commission noted that section 337 remedies are "wholly prospective. Consequently, policies supporting a requirement that a pleading aver pre-complaint knowledge differ in important respects at the Commission than in the district courts." *Id.* at *24. After *Television Sets*, the Commission extended that holding to knowledge that the acts constituted infringement, explaining that the service of the complaint with claim charts explaining such infringement was sufficient to establish knowledge that the acts constituted infringement. *Certain Beverage Brewing Capsules*, Inv. No. 337-TA-929, Comm'n Op. at 17-21, 2016 WL 9751230, at *10-12 (Public Version Apr. 5, 2016).

[14] In *Beverage Brewing Capsules*, the Commission noted that "[t]he infringement allegations set forth in the claim chart are substantially similar to the ID's ultimate infringement findings." *Id.* at *10.



SEC et al. v. MRI
SEC Exhibit 1048.064
IPR2023-00220

*See* Order No. 21 at 9-11, 21-22, *aff'd*, Comm'n Notice (EDIS Doc. ID 804167) at 3 (Sept. 11, 2023).

MRI's initial post-hearing brief contains no infringement arguments regarding either the Non-Accused OM Products or the Samsung Large-Sized Products with respect to claim 1. According, any such arguments have been waived and MRI has failed to meet its burden of proof. *Certain Human Milk Oligosaccharides and Methods of Producing the Same*, Inv. No. 337-TA-1120, Comm'n Op. at 23, 2020 WL 3073788, at *13 (Public Version June 8, 2020) (burden of establishing infringement lay with complainant with respect to non-accused, adjudicated product); Ground Rule 13.1. Samsung is therefore entitled to a finding of non-infringement of claim 1 for the Non-Accused OM Products and the Samsung Large-Sized Products.[15]

**2. Claim 4**

MRI contends that the Samsung Large-Sized Products infringe claim 4 of the '595 patent. CIB at 34.

**a. Accused Samsung Large-Sized Products**

(i) *Claim element [4a]: A liquid crystal display (LCD) comprising:*

To the extent that the preamble of claim 4 is limiting, there is no dispute that the Accused Samsung Large-Sized Products contain a liquid crystal display. *See* RIB at 25-35 (not disputing

[15] MRI's belated arguments regarding the Accused Samsung Large-Sized Products in its Post-Hearing Reply Brief, CRB at 18, are not sufficient. MRI provided no argument in its prehearing brief or initial post-hearing brief that the Accused Samsung Large-Sized Products infringe claim 1, and therefore has waived this issue. *See* Ground Rule 13.1; *see also* CPB at 27-44 (not arguing that the Accused Samsung Large-Sized Products infringe claim 1); CIB at 20-48. (same).

this limitation for claim 4).[16] Mr. Credelle testified that the parts lists for the Accused Samsung Large-Sized Products include a liquid crystal display. Tr. (Credelle) at 353:15-19; CDX-0006C at 145; JX-0136C-0141C (exploded views and parts lists). Accordingly, MRI has shown that the Accused Samsung Large-Sized Products contain a liquid crystal display.

(ii) *Claim element [4b]: a liquid crystal stack;*

There is no dispute that the Accused Samsung Large-Sized Products comprise a liquid crystal stack. *See* RIB at 25-35 (not disputing this limitation for claim 4). Mr. Credelle testified that liquid crystal stack "refers to the fact that an LCD is made up of two sheets of glass with some organic material in between that are liquid crystals[.]" Tr. (Credelle) at 353:20-354:4. He further testified that CAD files and product manuals show the liquid crystal stack in the Accused Samsung Large-Sized Products. Tr. (Credelle) at 354:5-24; CDX-0006C at 148-49; JX-0154C.00009; JX-0160C.00007; JX-0156C.00009; JX-0217C-JX-0221C (CAD files), JX-0238C-JX-0241C (CAD files). Accordingly, MRI has shown that the Accused Samsung Large-Sized Products comprise a liquid crystal stack.

(iii) *Claim element [4c]: a backlight assembly behind the liquid crystal stack and comprising:*

There is no dispute that the Accused Samsung Large-Sized Products comprise a backlight assembly behind the liquid crystal stack. *See* RIB at 25-35 (not disputing this limitation for claim 4). Mr. Credelle testified that the Accused Samsung Large-Sized Products have a backlight assembly behind the liquid crystal stack. Tr. (Credelle) at 354:25-355:13; CDX-0006C at 153 (citing JX-0221C); *see also* JX-0217C-JX-0220C, JX-0238C-JX-0241C. Accordingly,

[16] The parties have never argued that this preamble is limiting. *See generally* Updated Joint Claim Construction Statement (EDIS Doc. ID 792078). It is unnecessary to resolve this issue since, even if the preamble is limiting, it is undisputed that that the limitation is met.

MRI has shown that the Accused Samsung Large-Sized Products comprise a backlight assembly behind the liquid crystal stack.

(iv) *Claim element [4d]: a metal core printed circuit board (PCB) having front and back sides;*

The parties dispute whether the evidence of record is sufficient to show that the printed circuit board of the Accused Samsung Large-Sized Products is a "metal core" printed circuit board as required by this limitation. For the reasons set forth below, a preponderance of the evidence shows that the Accused Samsung Large-Sized Products have a metal core printed circuit board having front and back sides.

It is undisputed that the Accused Samsung Large-Sized Products comprise a printed circuit board having front and back sides. Tr. (Credelle) at 357:1-9; JX-0217C-221C (CAD drawings for the Accused Samsung Large-Sized Products). However, the parties dispute whether that circuit board is a "metal core" printed circuit board. MRI's expert Mr. Credelle opined that the circuit boards would contain a metal core based on his "experience and knowledge about how these products are made." Tr. (Credelle) at 357:1-9.[17] MRI also relied on the testimony of Mr. Ji-Su Kim, a Samsung senior engineer, who testified at his deposition that "there is metal in the LED plate" in the Accused Samsung Large-Sized Products. CX-1916C (Kim Dep. Tr.) at 55:10-17; CIB at 35-36. In addition, during the hearing, Mr. Brown discussed his tear-down of an OH85F product, labeled as CPX-0005. Tr. (Brown) at 268:12-16. Mr. Brown inspected the printed circuit board of the OH85F and testified that it was a metal core printed circuit board. Tr. (Brown) at 270:13-20. During cross-examination, Dr. Neikirk was

[17] During the hearing, Mr. Credelle was precluded from testifying about the specific physical products because he had not reviewed them before providing his expert report. Tr. (Credelle) at 356:4-24.

also asked to inspect that printed circuit board and admitted that it had a metal core. Tr. (Neikirk) at 779:19-780:2.

Respondents do not affirmatively dispute that these products have a metal core printed circuit board but argue failure of proof. *See* RIB at 25-26; *see also* Order No. 33 at 9. Dr. Neikirk testified that every printed circuit board contains metal in order to conduct electricity, and thus argues that Mr. Kim's testimony is insufficient. Tr. (Neikirk) at 687:2-9.

The evidence shows, by a preponderance, that the Accused Samsung Large-Sized Products comprise a metal core printed circuit board. As discussed above, Respondents did not affirmatively dispute that this limitation is met by their own products. Dr. Neikirk's interpretation of Mr. Kim's testimony—that Mr. Kim was simply referring to metal used to conduct electricity—is not persuasive given that, when asked if one of the materials in an LED plate is typically a metal, Mr. Kim stated "[t]ypically, other materials are used more, but that could be used." CX-1916C (Kim Dep. Tr.) at 54:9-13. Mr. Kim's testimony that metal "could be used" suggests he was not interpreting the question as Dr. Neikirk proposes (*i.e.*, as a self-evident question about metal used in every circuit board).[18] Moreover, Mr. Credelle's testimony is consistent with the actual tear-down of one of the Large-Sized Products, which was agreed by all to contain a metal core printed circuit board. *See* discussion *supra*.[19]

[18] While Mr. Kim's testimony was a translated deposition and thus not completely clear, based on the full record available (which Samsung did not seek to clarify), Dr. Neikirk's interpretation is less persuasive than MRI's.

[19] In reply, Respondents argue that this testimony, and Mr. Brown's teardown during the hearing, should be given no weight because he did not perform a teardown until after the close of fact discovery. RRB at 11; Tr. (Brown) at 296:6-297:14. But Respondents did not object to that testimony at that time and have never moved to strike it. Accordingly, the undersigned declines to disregard this testimony. Further, the evidence shows that Mr. Brown had done a tear-down of the OH85F product in 2020 during which he could observe the printed circuit board. Tr. (Brown) at 297:3-12.

Accordingly, the undersigned finds that the evidence is sufficient to show, by a preponderance, that the Accused Samsung Large-Sized Products comprise a metal core printed circuit board.

(v) *Claim element [4e]: a plurality of LEDs mounted on the front side of the PCB;*

There is no dispute that the Accused Samsung Large-Sized Products comprise a plurality of LEDs mounted on the front side of the PCB. *See* RIB at 25-35 (not disputing this limitation for claim 4). Mr. Credelle testified that the CAD files for the Accused Samsung Large-Sized Products [redacted]. Tr. (Credelle) at 357:1-12; CDX-0006C at 158 (citing JX-0221C); JX-0218C-JX-0221C (CAD files); CX-01916C (Kim Dep. Tr.) at 59:19-21. Accordingly, MRI has shown that the Accused Samsung Large-Sized Products comprise a plurality of LEDs mounted on the front side of the PCB.

(vi) *Claim element [4f]: a posterior surface on the rear side of the PCB;*

There is no dispute that the Accused Samsung Large-Sized Products comprise a posterior surface on the rear side of the PCB. *See* RIB at 25-35 (not disputing this limitation for claim 4). This term was not construed during claim construction, and therefore is accorded its plain and ordinary meaning. As Mr. Credelle testified, there is a posterior surface on the rear side of the printed circuit board, which Mr. Credelle opines is a [redacted], which MRI refers to as a [redacted] (and Samsung refers to as a "[redacted]"). Tr. (Credelle) at 357:13-18; CDX-0006C at 159; JX-0221C (OH85N CAD file); CIB at 37-38. Mr. Credelle's testimony also shows a [redacted]. Tr. (Credelle) at 357:13-18; CDX-0006C at 159. Although the parties dispute which of these is the "posterior surface on the rear side of the PCB," *see* discussion of element [4g] below, this dispute is not relevant for

limitation [4f] because the parties do not dispute that this limitation is satisfied.[20] Accordingly, MRI has shown that the Accused Samsung Large-Sized Products comprise a posterior surface on the rear side of the PCB.

(vii) *Claim element [4g]: a constricted convection plate placed behind the posterior surface of the PCB, defining a constricted convection channel having an entrance and an exit; and*

The parties dispute whether the Accused Samsung Large-Sized Products comprise a constricted convection plate placed behind the posterior surface of the PCB, defining a constricted convection channel having an entrance and an exit.

MRI argues that the Accused Samsung Large-Sized Products contain a constricted convection plate as that term was construed in the *Markman* Order. *See* CIB at 38-42. Mr. Credelle testified that the Accused Large-Sized Products [redacted]. Tr. (Credelle) at 358:2-360:2; CDX-0006C at 165; JX-0218C.

[redacted]

[20] This dispute about which surface is the "posterior surface on the rear side of the PCB" is discussed where appropriate.

*See also* CDX-0006C at 166-169; JX-0217C; JX-0219C; JX-0220C; JX-0221C. Mr. Credelle and MRI assert that [redacted], is a constricted convection plate placed behind the [redacted] which it contends is the posterior surface on the rear side of the PCB, and that it forms [redacted] (the areas indicated with dashed red lines in the demonstratives shown above and below). Tr. (Credelle) at 358:2-360:2; CDX-0006C at 166.

[redacted]

MRI asserts that this constricted convection channel is part of a "closed loop" of air and the temperature of air in this loop is cooler than the temperature in the electronics cavity and backlight assembly, so when that air passes those structures, it will lower the temperature of them (including the display). Tr. (Credelle) at 361:15-23, 372:23-373:15; CDX-0006C at 170-71; JX-0172C.0006; JX-0203C.0010:

[redacted]

In Mr. Credelle's opinion, the air in this closed loop circulates around the front of the display panel and into the alleged constricted convection channel, which covers a portion of the rear of the display, before flowing out at the fan.

Evidence presented by Mr. Credelle shows [redacted]. Tr. (Credelle) at 362:2-9; CDX-0006C at 172; JX-0172C.0032; JX-0173C.0034:

[redacted]

MRI also relies on a model performed by Dr. Neikirk, which it contends shows that the [redacted]. CIB at 42; CRB at 17; Tr. (Neikirk) at 780:5-781:5; RX-1314C.0001.

Respondents argue that the component identified by MRI is not a constricted convection plate as required by claim 4 of the '595 patent for several reasons. First, they assert it is not because Dr. Neikirk explained that the alleged constricted convection plate is a [redacted]. RIB at 26-28; Tr. (Neikirk) at 687:25-688:17; JX-0138C.00001; RDX-0003C at 42; *see also* Tr. (Lee) at 616:20-617:18.

[redacted]

Dr. Neikirk identified [redacted], which in his opinion prevent the [redacted] from constricting airflow. Tr. (Neikirk) at 688:25-689:19; RDX-0003 at 43.

[redacted]

Dr. Neikirk showed a demonstrative which indicated how he contends [redacted]. Tr. (Neikirk) at 689:20-691:14 (discussing RDX-0003C at 44). He contended that there were [redacted]. *Id.* at 692:3-693:11, 693:13-694:25. Finally, he explained that there was a [redacted]. *Id.* at 694:9-25. Dr. Neikirk performed tissue tests to support his opinions that these [redacted]. *See generally id.* at 692:17-694:25. Respondents further pointed out that the [redacted]. Tr. (Neikirk) at 695:1-24. In Respondents' view, Mr. Credelle ignored these [redacted]. RIB at 29-31. Respondents also argue that Dr. Neikirk's flow simulation does not show that this is a constricted convection channel because the [redacted]

[redacted]. RRB at 13-14. Finally, Respondents argue that the [redacted]. RIB at 32-33; Tr. (Neikirk) at 695:26-698:1. Respondents assert that this is improper because "the claim requires that the constricted convection channel be 'defin[ed]' by the constricted convection plate and posterior surface of the LED PCB." RIB at 33.

Respondents also argue that the constricted convection channel does not have an entrance and exit. RIB at 33-34. Dr. Neikirk opined that a [redacted]. *Id.*; Tr. (Neikirk) at 698:2-700:12:

[redacted]

RDX-0003C at 57; *see also* JX-0240C; RX-0914C.

In the undersigned's view, the evidence when considered as a whole shows, by a preponderance, that the Accused Samsung Large-Sized Products comprise a constricted convection plate placed behind the posterior surface of the PCB, defining a constricted convection channel having an entrance and an exit. The undersigned previously construed "constricted convection channel" to mean "a constricted channel through which air may flow to

remove heat from the posterior surface." Order No. 13 at 40. And the undersigned construed "constricted convection plate" to mean "a plate a configured to form part of a constricted convection channel." Order No. 13 at 40. The key dispute between the parties appears to be whether the alleged channel is "constricted" and thus whether the purported constricted convection plate forms a "constricted channel through which air may flow." The word "constricted" was not construed, but it can be understood with reference to its plain and ordinary meaning.

Although Respondents have shown that there are [redacted] in the [redacted], that fact alone does not render the Accused Large-Sized Products non-infringing.[21] The '595 patent does not require the constricted convection plate to be solid, with no openings. Indeed, dependent claim 8 explicitly requires access apertures, which are openings in the constricted convection plate. '595 patent at 5:5-10, cl. 8.[22]

The evidence shows by a preponderance that even with [redacted] is a constricted convection plate which forms a constricted convection channel as required by this limitation. MRI's expert, Mr. Credelle, opined that the constricted convection plate [redacted] with an entrance and exit through which air flows to remove heat from the posterior display surface: [redacted], and [redacted]. Tr.

---

[21] Dr. Neikirk showed that there are [redacted]. Tr. (Neikirk) at 689:10-19 (discussing RDX-0003C at 43). Dr. Neikirk also showed that the [redacted]. *Id.* at 695:11-24 (discussing RX-0003C at 53).

[22] While the specification states that these access apertures "may be plugged" it does not require this and describes the need to "maintain directed contact" between the air in the channel and the posterior display surface. *See* '595 patent at 5:10-13. Here, as discussed below, a preponderance of the evidence shows such directed contact. In the context of invalidity, Respondents argue that Takeuchi comprises a constricted convection plate although Takeuchi's "partition plate" includes openings. *See* Part VIII.B. 1 *infra*.

(Credelle) at 361:15-23, 372:23-373:15; CDX-0006C at 170-71; JX-0172C.00006. Samsung documents cited by Mr. Credelle illustrate [redacted] and [redacted]:

[redacted]

JX-0172C.00006; *see also* JX-0203C.00001 (showing similar diagram). A flow velocity diagram included in Samsung's documents also shows air flowing at high speeds through the alleged constricted convection channel:

[redacted]

JX-0203C.0006; Tr. (Credelle) at 363:3-13; CDX-0006C at 178. This flow diagram shows [redacted]. Samsung argued that these documents do not accurately show its products. RIB at 28; Tr. (Lee) at 619:4-620:8. Absent further documentary evidence, the undersigned does not find persuasive Mr. Lee's testimony that these documents do not, at a general level, depict the operation of the accused products. As MRI pointed out, JX-0203C, was identified in a response to Interrogatory No. 6 (seeking documents "that depict any cooling feature or process, or any component related to any cooling feature or process, of the products") pursuant to Samsung's representation that it would produce documents "sufficient to show the structure and operation of the Accused Products, from which MRI may ascertain the requested information." CX-1889C.00020-23 (citing SEITC0027546-551); *see* CRB at 17. Moreover, Samsung did not produce any documents or provide persuasive testimony indicating that the design of the Samsung Large-Sized Products [redacted].

In this context, the undersigned is unpersuaded by Samsung's arguments that the openings in the alleged constricted convection plate take it outside of the scope of claim 4. Dr. Neikirk showed a demonstrative with CAD drawings which showed [redacted], and in his opinion mean the [redacted]. Tr. (Neikirk) at 688:25-689:19; RDX-0003 at 43:[23]

[23] The entrance to the constricted convection channel is located [redacted] as shown in the RDX-0003 at 43, [redacted]. *See* Tr. (Credelle) at 358:6-21 (Mr. Credelle's opinion regarding the entrance and exit); CDX-0006C at 165. The "bottom" is located [redacted] of the Accused Samsung Large-Sized Products in normal operations, and the "top" is located near [redacted]. *See, e.g.*, CDX-0006C at 130 (showing CX-2042.00005).

[redacted]. In the 75-inch products, the [redacted]. Tr. (Neikirk) at 692:11-16. And in both the 75-inch and 85-inch products, a fan is also placed in the top center openings (colored yellow in the 85-inch products as shown above) which Dr Neikirk states provides air from the alleged constricted convection channel. *Id.* at 694:11-21.[24] Dr. Neikirk did not identify any other fans which were relevant for his analysis.

Although there is no dispute that there are [redacted], the undersigned is not persuaded that these [redacted] mean that the [redacted] The undersigned finds by a preponderance of the evidence that the OH75 products have at least one constricted convection channel that [redacted] and the OH85 products also have at least

[24] For purposes of this limitation, Dr. Neikirk relied on the OH75F and OH75A as exemplary of Samsung's 75-inch products, and on the OH85F and OH85N as exemplary of Samsung's 85-inch products for purposes of this limitation. *See generally* Tr. (Neikirk) at 687:12-701:8. The parties did not point to evidence that the arrangement of [redacted] is [redacted] in any of the Accused Samsung Large-Sized Products.

one constricted convection channel. *See* CIB at 39 (arguing that each Accused Samsung Large-Sized Product has "[redacted]."). The preponderance of the evidence shows that the [redacted] is a constricted convection channel. Samsung's documents, discussed above, persuasively show that there is constricted air flow through the channel which cools the display. Dr. Neikirk and Respondents have not shown that Samsung's own documents are inaccurate, at a general level, regarding the operation of the products' cooling systems. Although Dr. Neikirk presented a tissue test showing [redacted], *id.* at 693:19-694:8, this test has little persuasive value because it was not done in normal operating conditions. Dr. Neikirk's tissue test was done with the product disassembled. *See* RDX-0003C at 50. The undersigned agrees with MRI's argument that such a test "say[s] very little about how air flows through the product when assembled." CRB at 16. [redacted]. *See, e.g.*, JX-0136C (OH75 exploded view); JX-0172C.00030.[25]

Dr. Neikirk's opinion that [redacted] from Samsung's documents, which appear to show [redacted]. *See* JX-0203C.0006. Samsung's documents also do not appear [redacted] with Dr. Neikirk's modeling. A flow simulation provided by Dr. Neikirk appears to show [redacted]. RX-1314C.00001; *see* CIB at 44; Tr. (Neikirk) at 780:11-781:8. Although

[25] Moreover, as noted by MRI, the [redacted]. See CIB at 42; JX-0172C.00032.

Respondents argue that this flow simulation [redacted] that Respondents state [redacted] (*see* RRB at 13-14 (citing Tr. (Neikirk) at 781:2-8)), Respondents do not explain how or why the addition of the [redacted] would [redacted].

The evidence also shows by a preponderance that the OH85 products have at least one constricted convection channel. As discussed above, Samsung's documents show air flow through the channel. The undersigned is not persuaded by Dr. Neikirk's opinion that [redacted]. *See, e.g*, Tr. (Neikirk) at 689:16-691:8. RDX-0003C at 44. Dr. Neikirk did not perform any kind of testing on the OH85 products (including any tissue testing), and his opinion is at odds with Samsung's own documents and flow diagrams. *See* discussion above; JX-0203C.[26] The preponderance of the evidence shows that shows that the OH85 products have a constricted channel running at least from the bottom of the bracket to the fans in the center or the openings on the left and right sides.

Respondents' argument that there is no "constricted convection plate placed behind the posterior surface of the PCB, defining a constricted convection channel" is also unpersuasive. *See* RIB at 32-33; Tr. (Neikirk) at 696:2-698:1; RDX-3-55. Respondents' argument is based on its interpretation of claim 4 which requires the constricted convection channel to be defined by the rear side of the PCB, rather than the metal case that is placed behind the PCB. *See* RIB at 32-33. But "the posterior surface of the PCB" is broader than just the rear side of the PCB in the

[26] Dr. Neikirk's opinion that air would not flow into the channel also appears inconsistent with his own opinion that [redacted] *See* Tr. (Neikirk) at 694:17-21; RDX-0003C at 57. [redacted]. Moreover, in the context of invalidity, Respondents argue that Kim is an invalidating reference even though it includes more than one exit from the channel.

context of claim 4 of the ’595 patent. The prior limitation, element [4f] of claim 4, reads “a posterior surface on the rear side of the PCB[.]” This element is not, as Respondents argue, limited to only the rear of the PCB, but is broad enough to include a separate surface on the rear of the PCB. This element refers to “***the*** posterior surface,” which points to the “a posterior surface on the rear side of the PCB” from the prior limitation as an antecedent basis. In addition, the fact that claim 4 separately claims a “posterior surface” as well as “the rear side of the PCB” suggests that the “posterior surface” and the “rear side” need not be the same surface. *See* CIB at 37. Here, the evidence shows that the [redacted] is a posterior surface on the rear side of the PCB as required by limitation [4f]. Tr. (Credelle) at 357:13-18. And Respondents did not dispute that the asserted constricted convection channel is [redacted]. RIB at 26-33; RRB at 11-14. The [redacted].

For these reasons, the evidence shows by a preponderance that the Accused Samsung Large-Sized Products comprise a constricted convection plate placed behind the posterior surface of the PCB, defining a constricted convection channel having an entrance and an exit.

(viii) *Claim element [4h]: a fan positioned to draw air through the constricted convection channel.*

The parties dispute whether the fans identified by MRI are “positioned to draw air through the constricted convection channel.” The undisputed evidence shows that each of the Accused Samsung Large-Sized Products contains a set of fans positioned at the inlet of a heat exchanger. Tr. (Credelle) at 362:19-363:2; CDX-0006C at 177; JX-0156C.00002; JX-0160C.00001; JX-0172C.00006; JX-0173C.00006. The dispute is whether they are “positioned to draw air through the constricted convection panel.” For the reasons set forth below, MRI has

shown by a preponderance of the evidence that the fans are positioned to draw air through the constricted convection panel.

In Mr. Credelle's opinion, velocity flow diagrams provided in Samsung documents show [redacted]. Tr. (Credelle) at 363:3-13; CDX-0006C at 178; JX-0172C.00006; *see also* Tr. (Credelle) at 363:14-364:12 (discussing air flow in each Accused Samsung Large-Size Products); CDX-0006C at 179-82 (illustrating air flow); JX-0218C; JX-0219C; JX-0220C; JX-0221C (CAD files).

[redacted]

Respondents make the same argument they made for limitation [4g] above, arguing that the fans do not draw air through the channel "because there [redacted]." RIB at 34 (citing Tr. (Neikirk) at 700:13-701:8)).

For the same reasons discussed above, *see* discussion *supra*, Respondents' argument is insufficient to overcome the other evidence of record. Although Respondents argue that the fans do not draw air through the channel, this argument is contradicted by Samsung documents showing the [redacted] identified by Mr. Credelle. JX-

0172C.0006. The fact that other fans exist which may also draw some air into or out of the channel does not mean that the identified fans do not draw air through the constricted convection channel when considering the air flow as a whole.[27]

Accordingly, MRI has shown that the Accused Samsung Large-Sized Products comprise a fan positioned to draw air through the constricted convection channel.

**b. Non-Accused Products**

Samsung has sought an adjudication of non-infringement as to claim 4 of the '595 patent as to: (1) the "Non-Accused OM" products; and (2) the Samsung Mid-Sized Products (which are accused products for certain asserted claims, but not for claim 4). *See* RIB at 25, 35-36. As discussed *supra*, the *Oligosaccharides* factors favor adjudication of these products. *See* Order No. 21 at 9-11, 21-22.

MRI's initial post-hearing brief contains no infringement arguments regarding either the Non-Accused OM Products or the Samsung Mid-Sized Products with respect to claim 4. According, any such arguments have been waived and MRI has failed to meet its burden of proof. *Human Milk Oligosaccharides*, Comm'n Op., 2020 WL 3073788, at *13 (June 8, 2020) (burden of establishing infringement lay with complainant with respect to non-accused, adjudicated product); Ground Rule 13.1 Samsung is therefore entitled to a finding of non-infringement of claim 4 for the Non-Accused OM Products and the Accused Samsung Mid-Sized Products.

[27] As discussed *supra* and *infra*, in the context of invalidity, Respondents argue that Kim is an invalidating reference even though it includes more than one exit from the channel.

### 3. Claim 7

#### a. Accused Samsung Large-Sized Products

(i) *Claim element [7]: "The LCD from claim 4 wherein: the fan is placed near the exit of the constricted convection channel"*

Claim 7 depends from Claim 4.

There is no dispute that, to the extent claim 4 is infringed, the Accused Samsung Large-Sized Products comprise a fan placed near the exit of the constricted convection channel. *See* RIB at 34 (not disputing this limitation for claim 7). Mr. Credelle testified that Samsung CAD files show that the [redacted]. Tr. (Credelle) at 364:17-365:11; CDX-0006C at 187 (citing JX-0221C); *see also* JX-0218C-JX-0221C (CAD files). Accordingly, MRI has shown that the Accused Samsung Large-Sized Products comprise a fan placed near the exit of the constricted convection channel.

MRI has therefore shown that the Accused Samsung Large-Sized Products infringe claim 7.

#### b. Non-Accused Products

Samsung has sought an adjudication of non-infringement as to claim 7 of the '595 patent as to the "Non-Accused OM" products. *See* RIB at 25, 35-36. As discussed *supra*, the *Oligosaccharides* factors favor adjudication of these products.[28]

MRI's initial post-hearing brief contains no infringement arguments regarding either the Non-Accused OM Products with respect to claim 7. According, any such arguments have been waived and MRI has failed to meet its burden of proof. *Human Milk Oligosaccharides*, Comm'n Op., 2020 WL 3073788, at *13 (June 8, 2020) (burden of establishing infringement lay with

[28] The Samsung Mid-Sized Products were adjudicated as non-infringing in Order No. 21.

complainant with respect to non-accused, adjudicated product); Ground Rule 13.1 Samsung is therefore entitled to a finding of non-infringement of claim 7 for the Non-Accused OM Products.

### 4. Claim 8

#### a. Accused Samsung Large-Sized Products

(i) *Claim element [8]: "The LCD from claim 4 further comprising: a plurality of access apertures through the constricted convection plate."*

Claim 8 depends from Claim 4. For the reasons set forth below, MRI has not shown that the Accused Samsung Large-Sized Products infringe claim 8.

The undisputed testimony shows that the alleged constricted convection plate [redacted]. *See* Tr. (Credelle) at 366:17-367:4; CDX-0006C at 195; JX-0218C; JX-0219C; JX-0220C; JX-0221C;

[redacted]

Mr. Credelle testified that in his opinion, the [redacted] identified in his demonstrative are access apertures because [redacted]. Tr. (Credelle) at 365:18-366:5; CDX-0006C at 195. He also noted that Samsung Training Manuals show that some of these are [redacted]. *Id.* at 366:6-10; JX-

0172C.00034. And he noted that a Samsung engineer, Mr. Seo, testified that [redacted]. CX-1911C (Seo Dep. Tr.) at 78:5-18.

Respondents argued that none of the alleged access apertures "provide access to any hardware on the display posterior" and that "there is no hardware located on the other side of the opening." RIB at 35; RRB at 15; Tr. (Neikirk) at 701:9-702:2. Respondents also argued that [redacted]. RRB at 15. Accordingly, Respondents argue that these are not access apertures as required by the claim.

The undersigned finds that MRI has not shown the existence of "access apertures" by a preponderance of the evidence. The evidence only persuasively shows that the [redacted]. *See, e.g.*, CIB at 45 (discussing Training Manual showing that the [redacted]). Similarly, the testimony from Mr. Credelle cited by MRI (Tr. (Credelle) at 366:1-23) also only refers to [redacted]. *See, e.g.*, Tr. (Credelle) at 365:23-366:23 (identifying [redacted]). As used in the patent, however, the term "access apertures" refers to an opening for access (by a person) to hardware on the other side of the opening (*e.g.*, for maintenance or inspection), not simply a hole of any size for wiring or the ability to access a wire in the hole. *See, e.g.*, '595 patent at 5:7-13 ("The access apertures . . . allow access to hardware found on the display posterior 22; without the need to remove the constricted convection plate 30. The access apertures 34 may be plugged before operation to maintain directed contact between the refrigerated air and the posterior display surface 22.").[29] Because MRI has not persuasively shown that the asserted access

[29] That is, the fact that a wire can "access" hardware through a hole or one can access a wire in a hole is insufficient to create an "access opening." MRI appears to agree with this approach when addressing the Takahashi prior art reference. *See* CIB at 140 ("access to the circuit board in Kim is done by conveniently removing Kim's small shield cover . . . rendering access apertures unnecessary"); *see also* Tr. (Credelle)

apertures are appropriate for access to hardware on the other side of the constricted convection plate, the Accused Samsung Large-Sized Products do not infringe claim 8.

**b. Non-Accused Products**

Samsung has sought an adjudication of non-infringement as to claim 8 of the '595 patent as to: (1) the "Non-Accused OM" products; and (2) the Accused Samsung Mid-Sized Products (which are accused products for certain asserted claims, but not for claim 4). *See* RIB at 25, 35-36. As discussed *supra*, the *Oligosaccharides* factors favor adjudication of these products.

MRI's initial post-hearing brief contains no infringement arguments regarding either the Non-Accused OM Products or the Accused Samsung Mid-Sized Products with respect to claim 8. According, any such arguments have been waived and MRI has failed to meet its burden of proof. *Human Milk Oligosaccharides*, Comm'n Op., 2020 WL 3073788, at *13 (June 8, 2020) (burden of establishing infringement lay with complainant with respect to non-accused, adjudicated product); Ground Rule 13.1. Samsung is therefore entitled to a finding of non-infringement of claim 8 for the Non-Accused OM Products and the Accused Samsung Mid-Sized Products.

**B. The '322 Patent**

MRI alleges infringement of claims 4, 5, and 8 of the '322 patent by the Accused Samsung Large-Sized Products and claims 9, 12, and 13 of the '322 patent by the Accused Samsung Mid-Sized Products (including the Accused Coates Products and Accused Palmer Products). CIB at 48-59. MRI also alleges that Samsung induces infringement of claim 12 of the '322 patent. *Id.* at 58-89.

---

at 1185:2-16 ("the practical access for any parts inside this unit would be to take off the shield cover to replace a printed circuit board or have access to a wire").

For the reasons set forth below, MRI has proven that the Accused Large-Sized Products infringe claims 4 and 5 of the ’322 patent, but not claim 8. MRI has failed to prove that the Accused Samsung Mid-Sized Products infringe claims 9, 12, and 13 of the ’322 patent. MRI has also failed to prove that Samsung induces infringement of claim 12 of the ’322 patent.

### 1. Claim 4

#### a. Accused Samsung Large-Sized Products

(i) *Claim element [4a]: A liquid crystal display (LCD) comprising:”*

This limitation of claim 4 of the ’322 patent is identical to limitation [4a] of the ’595 patent. For the same reasons as discussed above MRI has shown that the Accused Samsung Large-Sized Products contain a liquid crystal display.

(ii) *Claim element [4b]: a liquid crystal stack;*

This limitation of claim 4 of the ’322 patent is identical to limitation [4b] of the ’595 patent. For the same reasons as discussed above MRI has shown that the Accused Samsung Large-Sized Products comprise a liquid crystal stack.

(iii) *Claim element [4c]: a backlight assembly behind the liquid crystal stack and comprising:*

This limitation of claim 4 of the ’322 patent is identical to limitation [4c] of the ’595 patent. For the same reasons as discussed *supra*, MRI has shown that the Accused Samsung Large-Sized Products comprise a backlight assembly behind the liquid crystal stack.

(iv) *Claim element [4d]: a printed circuit board (PCB) having front and back sides;*

This limitation of claim 4 of the ’322 patent is similar to limitation [4d] of the ’595 patent. Neither party treats this limitation differently from limitation 4[d] of the ’595 patent or makes any unique arguments as to this limitation. *E.g.*, CIB at 48; RIB at 44-45. However, the key difference is that limitation [4d] of the ’595 patent has an additional limitation, requiring “a

metal core" PCB. The dispute for limitation [4d] was whether MRI had proven the Accused Samsung Large-Sized Products contained a "metal core" PCB. *See* discussion *supra*. But it was undisputed that the Accused Samsung Large-Sized Products contain a PCB. *See, e.g.*, JX-0217C-221C (CAD drawings for the Accused Samsung Large-Sized Products). Accordingly, MRI has shown that the Accused Samsung Large-Sized Products comprise a printed circuit board (PCB) having front and back sides.

(v) *Claim element [4e]: a plurality of LEDs mounted on the front side of the PCB;*

This limitation of claim 4 of the '322 patent is identical to limitation [4e] of the '595 patent. For the same reasons as discussed above MRI has shown that the Accused Samsung Large-Sized Products comprise a plurality of LEDs mounted on the front side of the PCB.

(vi) *Claim element [4f]: a posterior surface on the rear side of the PCB;*

This limitation of claim 4 of the '322 patent is identical to limitation [4f] of the '595 patent. For the same reasons as discussed above MRI has shown that the Accused Samsung Large-Sized Products comprise a posterior surface on the rear side of the PCB.

(vii) *Claim element [4g]: a constricted convection plate placed behind and substantially parallel with the posterior surface of the PCB; and*

This limitation of claim 4 of the '322 patent is similar to limitation [4g] of claim 4 of the '595 patent. This limitation also requires that the constricted convection plate be "substantially parallel with the posterior surface of the PCB[.]" As discussed above MRI has shown that the Accused Samsung Large-Sized Products comprise a constricted convection plate. Respondents did not dispute this added, "substantially parallel" requirement. *See* RIB at 44-45; RRB at 23. Mr. Credelle's undisputed testimony showed that the constricted convection plate is

approximately parallel to the posterior surface of the PCB, under the parties' agreed construction. Tr. (Credelle) at 367:21-368:5; CDX-0006C at 204; JX-0218C; JX-0219C; JX-0220C; JX-0221C.

(viii) *Claim element [4h]: a fan positioned to draw air between the constricted convection plate and the posterior surface.*

This limitation of claim 4 of the '322 patent is identical to limitation 4[h] of the '595 patent. For the same reasons as discussed above MRI has shown that the Accused Samsung Large-Sized Products comprise a fan positioned to draw air between the constricted convection plate and the posterior surface.

***

For the foregoing reasons, MRI has shown that the Accused Samsung Large-Sized Products infringe claim 4 of the '322 patent.

**b. Non-Accused Products**

Samsung has sought an adjudication of non-infringement as to claim 4 of the '322 patent as to: (1) the "Non-Accused OM" products; and (2) the Accused Samsung Mid-Sized Products (which are accused products for certain asserted claims, but not for claim 4). *See* RIB at 44, 46-47. As discussed *supra*, the *Oligosaccharides* factors favor adjudication of these products.

MRI's initial post-hearing brief contains no infringement arguments regarding either the Non-Accused OM Products or the Accused Samsung Mid-Sized Products with respect to claim 4. According, any such arguments have been waived and MRI has failed to meet its burden of proof. *Human Milk Oligosaccharides*, Comm'n Op., 2020 WL 3073788, at *13 (June 8, 2020) (burden of establishing infringement lay with complainant with respect to non-accused, adjudicated product); Ground Rule 13.1. Samsung is therefore entitled to a finding of non-

infringement of claim 4 for the Non-Accused OM Products and the Accused Samsung Mid-Sized Products.

### 2. Claim 5

#### a. Accused Samsung Large-Sized Products

(i) *"The LCD from claim 4 further comprising: at least one bracket which connects the posterior surface with the constricted convection plate."*

The parties dispute whether the additional limitation of claim 5 is met. The undisputed evidence shows that the Accused Samsung Large-Sized Products contain a bracket connecting the metal cover with the constricted convection plate. Tr. (Credelle) at 368:21-369:16; JX-0218C; JX-0219C; JX-0220C; JX-0221C. MRI argues that this bracket "connects the posterior surface with the constricted convection plate" because of its argument that the metal cover is the "posterior surface on the rear side of the PCB." CIB at 50. Respondents, however, argue that this bracket does not "connect[] the posterior surface with the constricted convection plate" because it contends that the claimed "the posterior surface" must be the rear side of the PCB, not the metal cover. RIB at 45; *see also* Tr. (Neikirk) at 703:18-704:10. RDX-0003C at 66:

[redacted]

The undersigned finds that the claimed "posterior surface" can refer to the metal cover. The antecedent basis of claim 5's "the posterior surface" is claim 4's "a posterior surface on the

rear side of the PCB." This claim language does not require the "posterior surface on the rear side of the PCB to be the rear side of the PCB itself. Indeed, the fact that claim 4 separately claims a "posterior surface on" and "the rear side of the PCB" suggests that the "posterior surface on" that rear side need not be the same surface. *See* CIB at 37. Accordingly, the metal cover can constitute the claimed "posterior surface on the rear side of the PCB" for purposes of claims 4 and 5 of the '322 patent. Because the brackets attach the metal cover to the constricted convection plate, this limitation of claim 5 is satisfied by the Accused Samsung Large-Sized Products.

Accordingly, MRI has shown that the Accused Samsung Large-Sized Products infringe claim 5 of the '322 patent.

**b. Non-Accused Products**

Samsung has sought an adjudication of non-infringement as to claim 5 of the '322 patent as to: (1) the "Non-Accused OM" products; and (2) the Accused Samsung Mid-Sized Products (which are accused products for certain asserted claims, but not for claim 5). *See* RIB at 44, 46-47. As discussed *supra*, the *Oligosaccharides* factors favor adjudication of these products.

MRI's initial post-hearing brief contains no infringement arguments regarding either the Non-Accused OM Products or the Accused Samsung Mid-Sized Products with respect to claim 5. According, any such arguments have been waived and MRI has failed to meet its burden of proof. *Human Milk Oligosaccharides*, Comm'n Op., 2020 WL 3073788, at *13 (June 8, 2020) (burden of establishing infringement lay with complainant with respect to non-accused, adjudicated product); Ground Rule 13.1. Samsung is therefore entitled to a finding of non-infringement of claim 5 for the Non-Accused OM Products and the Accused Samsung Mid-Sized Products.

### 3. Claim 8

#### a. Accused Samsung Large-Sized Products

(i) *"The LCD from claim 4 further comprising: a plurality of access apertures on the constricted convection plate."*

This limitation of claim 8 of the '322 patent is identical to the limitation in claim 8 of the '595 patent. For the same reasons discussed above, MRI has not shown that the Accused Samsung Large-Sized Products comprise a plurality of access apertures on the constricted convection plate.

Accordingly, MRI has not proven by a preponderance of evidence that the Accused Samsung Large-Sized Products infringe claim 8 of the '322 patent.

#### b. Non-Accused Products

Samsung has sought an adjudication of non-infringement as to claim 8 of the '322 patent as to: (1) the "Non-Accused OM" products; and (2) the Samsung Mid-Sized Products (which are accused products for certain asserted claims, but not for claim 8). *See* RIB at 44, 46-47. As discussed *supra*, the *Oligosaccharides* factors favor adjudication of these products.

MRI's initial post-hearing brief contains no infringement arguments regarding either the Non-Accused OM Products or the Samsung Mid-Sized Products with respect to claim 8. According, any such arguments have been waived and MRI has failed to meet its burden of proof. *Human Milk Oligosaccharides*, Comm'n Op., 2020 WL 3073788, at *13 (June 8, 2020) (burden of establishing infringement lay with complainant with respect to non-accused, adjudicated product); Ground Rule 13.1. Samsung is therefore entitled to a finding of non-infringement of claim 8 for the Non-Accused OM Products and the Samsung Mid-Sized Products.

#### 4. Claim 9

MRI asserts that the Accused Samsung Mid-Sized Products (including the Accused Coates Products and Accused Palmer Products incorporating Accused Samsung Mid-Sized Products) infringe claim 9 of the ’322 patent. CIB at 51-58. For the reasons set forth below, MRI has not shown that the Accused Samsung Mid-Sized Products infringe claim 9.

##### a. Accused Samsung Mid-Sized Products

(i) *Claim element [9a]: A system for cooling an electronic display comprising:*

This limitation of claim 9 of the ’322 patent is similar to parts of the limitation [1a] of the ’595 patent. MRI does not treat this limitation differently from limitation [1a] of the ’595 patent. CIB at 51. Unlike limitation [1a] of the ’595 patent, Respondents do not dispute that this limitation is met. RIB at 37-43 (not disputing this limitation). As discussed above the undisputed facts show that the Accused Samsung Mid-Sized Products contain a system for cooling an electronic display. Tr. (Credelle) at 324:4-8; CDX-0006C at 37 (citing CX-0242.0005). Accordingly, MRI has shown that the Accused Samsung Mid-Sized Products contain a system for cooling an electronic display.

(ii) *Claim element [9b]: an electronic display comprising a front display surface and a posterior surface where no electronics are mounted to the posterior surface of the electronic display;*

The parties dispute whether the Accused Samsung Mid-Sized Products satisfy this limitation of claim 9. *See* CIB at 51-57; RIB at 37-43. The dispute between the parties on this limitation is whether the electronic display of the Accused Samsung Mid-Sized Products comprise “a posterior surface where no electronics are mounted to the posterior surface of the electronic display[.]” For the reasons set forth below, MRI has not shown that the Accused

Samsung Mid-Sized Products comprise "a posterior surface where no electronics are mounted to the posterior surface of the electronic display[.]"

The parties do not dispute that the Accused Samsung Mid-Sized Products comprise an electronic display comprising a front display surface. As discussed above the Accused Samsung Mid-Sized Products comprise an electronic display. The undisputed evidence also shows that the electronic displays comprise a front display surface (i.e., the surface that displays images). Tr. (Credelle) at 336:16-337:4; CDX-0006C at 88; JX-0169C.

The evidence presented by MRI shows that the electronic display of the Accused Samsung Mid-Sized Products comprise a posterior surface, but the posterior surface contains a [redacted].

[redacted]

MRI acknowledges that the [redacted] to the posterior surface of the entire electronic display assembly. *See* CIB at 53 ("the [redacted] of the Accused Samsung Mid-Sized Products is mounted to a bracket which *connects* the [redacted] to the posterior surface of the entire electronic display assembly") (emphasis in original). Mr. Credelle opined, however, that the [redacted] is not "mounted to the posterior surface of the electronic display" because this [redacted], which is spaced from the posterior surface and thus

allows airflow underneath it. Tr. (Credelle) at 338:23-339:22; CDX-0006C at 92-93; JX-0213C; JX-0214C; JX-0215C; JX-0216C. In its briefing, MRI also argued that this [redacted], and therefore not behind the "posterior surface of the electronic display" under certain arguments that MRI contends Respondents set forth. CIB at 51-52. MRI also argued that attachment via a bracket is not "mounting" in the context of the '322 patent because the patents refer to connection via a bracket as "attach" or "secure" rather than "mount," which refers to a direct connection. *Id.* at 52-53. MRI also argues that certain prior art shows that the T-CON is not "mounted" to the posterior surface. *Id.* at 53-56.

The undisputed evidence also shows that there is a [redacted]. Tr. (Credelle) at 339:24-340:6. But Mr. Credelle opined that this [redacted] Tr. (Credelle) at 340:10-341:1; CDX-0006C at 94 (citing JX-0213C; JX-0214C; JX-0215C; JX-0216C):

[redacted]

Mr. Credelle testified that this wire is not "electronics" within the meaning of this term because in his opinion, a person of skill in the art would not consider wires to be electronics. Tr. (Credelle) at 341:2-8.

Respondents also showed evidence of additional components located behind the display surface. Dr. Neikirk pointed to what he called a [redacted]. Tr. (Neikirk) at 662:4-663:2; RDX-0003C at 20; RX-1121C; RX-1146C:

[redacted]

And Dr. Neikirk also pointed to [redacted]. Tr. (Neikirk) at 660:2-662:3; RDX-0003C at 19 (citing RX-1123C; JX-0305C.0023-24):

[redacted]

Upon consideration of the evidence of record, the undersigned finds that the Accused Samsung Mid-Sized Products do not meet this limitation because there is at least one piece of electronics mounted to the posterior surface of the electronic display: the T-CON board. As understood in the context of the '322 patent, the plain and ordinary meaning of the term "mounted to" includes attachment via use of a bracket. MRI's argument that "mounting" would exclude use of a bracket is contradicted by the specification. Although MRI argues that the specification uses "attach" or "secure" and not "mount" when referring to connection via bracket, CIB at 52-53, the undersigned is not persuaded that the '322 patent makes such a delineation. Critically, as Respondents point out, the '322 patent specification makes several references to "mounting brackets." *See* RIB at 39-40. For example, one paragraph cited in part by MRI reads:

> FIG. 2 is a posterior view of a display 10 that may be used in an exemplary embodiment. In a typical display, the display posterior 22 may include four *mounting brackets* 20. The four mounting brackets 20 are shown by way of example and not by way of limitation, exemplary embodiments may be used with various numbers of *mounting brackets* 20. The *mounting brackets* 20 serve to attach the constricted convection plate 30 (shown in FIG. 3) to the display posterior 22. The height that the mounting brackets 20 extending from the display posterior 22 define the depth of the constricted convection cooling channel 50 (shown in FIG. 5).

> This may also be described as the gap distance between the display posterior 22 and the constricted convection plate.

'322 patent at 4:39-51 (emphasis added). The term "mounting brackets" is used several other times by the '322 patent. *Id.* at 5:25-27, 5:35-37. 6:49-59. Portions of these paragraphs are cited by MRI, but MRI does not acknowledge them. *See* CIB at 53 (citing JX-0002 at 4:46, 5:25-27, 5:35-37, 6:53-54). In fact, MRI's reply brief is silent to this argument. CRB at 19-26. In the context of the '322 patent, the plain and ordinary meaning of the term "mounted to" clearly encompasses mounting a component with a bracket.

Mr. Credelle's opinion that mounting would exclude use of brackets is not credible because his opinion is contradicted by the specification. Mr. Credelle opined that "the specification of the '322 patent doesn't explain what it means by mounted to the posterior display surface[.]" Tr. (Credelle) at 419:2-5. But on cross-examination, he admitted that the specification discloses mounting using brackets. *Id.* at 419:16-20. And Mr. Credelle admitted as a general matter, two objects can be mounted together by a bracket. *Id.* at 415:20-25.

MRI also argues that the Accused Mid-Sized Samsung Products infringe under Respondents' constructions because the allegedly mounted electronics, [redacted]. CIB at 51-52; CRB at 19-22.[30] But MRI has provided no persuasive reason why the area outside of the gasketed area would not be considered part of the claimed "posterior surface" of "the electronic display" for purposes of this limitation. Although the term "posterior surface" was not specifically construed for purposes of this claim limitation,

[30] Respondents argue that this argument has been waived because MRI did not raise this argument in its Pre-Hearing Brief and Dr. Neikirk did not present any opinion supporting this argument. RRB at 20-21. The undersigned agrees that MRI has waived this argument under Ground Rule 9.2 by failing to present it in its pre-hearing brief. *See* CPHB at 46-49. Despite this waiver, the undersigned addresses the merits of MRI's arguments for the sake of completeness.

the construction of "posterior display surface" and "posterior surface of the electronic display" as "rear-facing surface of the display assembly" is instructive here. *See* Order No. 13 at 42. The '322 patent explicitly discloses embodiments where the constricted convection plate only covers a portion of the posterior display surface, as is the case here. '322 patent at 5:29-31 ("In other exemplary embodiments, the constricted convection plate 30 may only cover a portion of the posterior display surface."); '322 patent, claim 1. This indicates that the "posterior display surface" is not limited to only the portion covered by the constricted convection plate, or within the scope of the constricted convection channel. MRI's narrow interpretation is not supported by the intrinsic evidence.[31]

The evidence shows that the [redacted] is mounted to the posterior surface of the electronic display. Accordingly, the Accused Samsung Mid-Sized Products do not comprise an electronic display comprising a front display surface and a posterior surface where no electronics are mounted to the posterior surface of the electronic display.

(iii) *Claim element [9c]: a constricted convection plate behind the posterior surface of the display covering a majority of the posterior display surface; and*

This limitation is identical to limitation [1b] of the '595 patent. As with limitation [1b] of the '595 patent, there is no dispute here that the Accused Samsung Mid-Sized Products comprise a constricted convection plate behind the posterior surface of the display covering a majority of the posterior display surface. *See* RIB at 37-43 (not disputing this limitation for claim 9). For the reasons discussed above MRI has shown that the Accused Samsung Mid-Sized Products comprise a constricted convection plate behind the posterior surface of the display covering a

[31] Similarly, in arguing against Respondents' Kimura-based invalidity arguments for claim 9 of the '322 patent, MRI did not confine the "posterior display surface" to the area covered by the asserted constricted convection plate or channel. *See* CIB at 145-146.

majority of the posterior display surface. *See, e.g.*, Tr. (Credelle) at 327:2-328:6; JX-0213C; JX-0214C; JX-0215C; JX-0216C (all CAD files)

(iv) *Claim element [9d]: a means for forcing air between the constricted convection plate and the posterior surface of the electronic display.*

There is no dispute that the Accused Samsung Mid-Sized Products comprise a means for forcing air between the constricted convection plate and the posterior surface of the electronic display. *See* RIB at 37-43 (not disputing this limitation for claim 9). As Mr. Credelle testified, the means for forcing air between the constricted convection plate and the posterior surface of the electronic display are the three inlet fans at the back of the display Tr. (Credelle) at 335:2-336:6; CDX-0006C at 76-78; JX-0206C.0108 (Samsung presentation); JX-0213C; JX-0214C; JX-0215C; JX-0216C (all CAD drawings); CX-0280 (teardown image). These fans satisfy the agreed construction for this limitation because they are the same structure as the fans in the parties' agreed construction. *Kemco Sales, Inc. v. Control Papers Co., Inc.*, 208 F.3d 1352, 1364 (Fed. Cir. 2000). Accordingly, MRI has shown that the Accused Samsung Mid-Sized Products comprise a means for forcing air between the constricted convection plate and the posterior surface of the electronic display.

For the reasons set forth above, MRI has failed to show that the Accused Samsung Mid-Sized Products infringe claim 9 of the '322 patent.

**b. Non-Accused Products**

Samsung has sought an adjudication of non-infringement as to claim 9 of the '322 patent as to: (1) the "Non-Accused OM" products; and (2) the Samsung Large-Sized Products (which are accused products for certain asserted claims, but not for claim 9). *See* RIB at 46-47. As discussed *supra*, the *Oligosaccharides* factors favor adjudication of these products. The

undersigned granted summary determination that the Non-Accused OM Products do not infringe claim 9 of the ’322 patent, which was affirmed by the Commission. Order No. 21 at 13-14, *aff’d*, Comm’n Notice, EDIS Doc. ID 804167 (Sept. 11, 2023).

MRI’s initial post-hearing brief contains no infringement arguments regarding the Samsung Large-Sized Products with respect to claim 9. According, any such arguments have been waived and MRI has failed to meet its burden of proof. *Human Milk Oligosaccharides*, Comm’n Op., 2020 WL 3073788, at *13 (June 8, 2020) (burden of establishing infringement lay with complainant with respect to non-accused, adjudicated product); Ground Rule 13.1. Samsung is therefore entitled to a finding of non-infringement of claim 9 for the Samsung Large-Sized Products.

**5. Claim 12**

Claim 12 of the ’322 patent depends from claim 9 of the ’322 patent. As discussed above, the Accused Samsung Mid-Sized Products (including the Accused Coates Products and Accused Palmer Products incorporating Accused Samsung Mid-Sized Products) do not infringe claim 9, and therefore they cannot infringe claim 12. However, if the Accused Mid-Sized Products did infringe claim 9, they would infringe claim 12 for the reasons set forth below.

**a. Accused Samsung Mid-Sized Products**

(i) *Claim element [12b]: a housing which contains the electronic display, constricted convection plate, and means for forcing air; and*

The parties dispute whether the Accused Samsung Mid-Sized Products comprise a housing which contains the electronic display, constricted convection plate, and means for forcing air. As discussed with respect to limitation [1a] of claim 1 of the ’595 patent, the Accused Samsung Mid-Sized Products comprise “a housing.” *See* discussion *supra*. MRI

argues that this is contained within the housing because Mr. Credelle's "analysis for element [1a] of the '595 Patent showed that all elements of the cooling system were 'contained within' the rear cover, four side walls, and front bezel contains all elements of the claimed cooling system." CIB at 57.

Respondents argue that the housing does not "contain" the "constricted convection plate" because it is exposed to the external environment and "is itself part of the housing." RIB at 43-44; Tr. (Neikirk) at 655:10-16, 656:2-657:18.

Although claim 1 of the '595 patent and claim 12 of the '322 patent use different language, the parties treat this limitation the same as limitation [1a] of the '595 patent. The dispute here is whether the housing "contains" the constricted convection plate if the constricted convection plate is part of the claimed housing. As discussed above, the constricted convection plate is contained within the external-facing housing of the Accused Samsung Mid-Sized Products. Accordingly, the housing "contains the . . . constricted convection plate[]" as required by claim 12 of the '322 patent.

(ii) *Claim element [12c]: an entrance aperture within the housing which permits external ambient air to enter the housing and flow between the constricted convection plate and the posterior surface.*

There is no dispute that the Accused Samsung Mid-Sized Products comprise an entrance aperture within the housing which permits external ambient air to enter the housing and flow between the constricted convection plate and the posterior surface. *See* RIB at 43-44 (not disputing this limitation for claim 9). Mr. Credelle testified that the Accused Samsung Mid-Sized Products each contain an entrance aperture within the housing (or the fan housing) which permit ambient air to enter and flow between the constricted convection plate and posterior surface. Tr. (Credelle) at 344:18-346:4; CX-0280.00002; JX-0207C.00002; JX-0208C.00095;

JX-0213C. Accordingly, MRI has shown that the Accused Samsung Mid-Sized Products comprise an entrance aperture within the housing which permits external ambient air to enter the housing and flow between the constricted convection plate and the posterior surface.

Because the Samsung Accused Mid-Sized Products do not infringe claim 9 of the ’322 patent, however, they do not infringe claim 12.

**b. Induced Infringement**

MRI also argues that Samsung induces its customer’s infringement of claim 12 for the same reasons it alleges for claim 1 of the ’595 patent. CIB at 58. Respondents do not raise any unique arguments regarding claim 12 of the ’322 patent. RIB at 43-44. Samsung cannot induce infringement of claim 12 because, even with the addition of Palmer or Coates enclosures, the Accused Samsung Mid-Sized Products do not infringe claim 9.

**c. Non-Accused Products**

Samsung has sought an adjudication of non-infringement as to claim 12 of the ’322 patent as to: (1) the “Non-Accused OM” products; and (2) the Samsung Large-Sized Products (which are accused products for certain asserted claims, but not for claim 12). *See* RIB at 46-47. As discussed *supra*, the *Oligosaccharides* factors favor adjudication of these products. The undersigned granted summary determination that the Non-Accused OM Products do not infringe claim 12 of the ’322 patent, which was affirmed by the Commission. Order No. 21 at 13-14, *aff’d*, Comm’n Notice, EDIS Doc. ID 804167 (Sept. 11, 2023).

MRI’s initial post-hearing brief contains no infringement arguments regarding the Accused Samsung Large-Sized Products with respect to claim 12. According, any such arguments have been waived and MRI has failed to meet its burden of proof. *Human Milk Oligosaccharides*, Comm’n Op., 2020 WL 3073788, at *13 (June 8, 2020) (burden of

establishing infringement lay with complainant with respect to non-accused, adjudicated product). Samsung is therefore entitled to a finding of non-infringement of claim 12 for the Accused Samsung Large-Sized Products.

**6. Claim 13**

**a. Accused Samsung Mid-Sized Products**

(i) *"The cooling system from claim 12 wherein: the means for forcing air between the constricted convection plate and the posterior surface of the electronic display comprises a plurality of fans placed near the entrance aperture."*

There is no dispute that in the Accused Samsung Mid-Sized Products, the means for forcing air between the constricted convection plate and the posterior surface of the electronic display comprises a plurality of fans placed near the entrance aperture. *See* RIB at 44 (not disputing this limitation for claim 9). Mr. Credelle testified that the Accused Samsung Mid-Sized Products contain a plurality of fans placed near the entrance aperture. Tr. (Credelle) at 346:5-15; CDX-0006C at 121-22 (citing JX-0213C-0216C; CX-0280); *see also* discussion of claim element [9d], *supra*, (discussing "a means for forcing air between the constricted convection plate and the posterior surface of the electronic display" limitation of claim 9). Accordingly, MRI has shown that in the Accused Samsung Mid-Sized Products, the means for forcing air between the constricted convection plate and the posterior surface of the electronic display comprises a plurality of fans placed near the entrance aperture.

The Accused Samsung Mid-Sized Products do not, however, infringe claim 13 because they do not infringe claims 9 and 12 of the '322 patent.

**b. Non-Accused Products**

Samsung has sought an adjudication of non-infringement as to claim 13 of the '322 patent as to: (1) the "Non-Accused OM" products; and (2) the Samsung Large-Sized Products

(which are accused products for certain asserted claims, but not for claim 13). *See* RIB at 46-47. As discussed *supra*, the *Oligosaccharides* factors favor adjudication of these products. The undersigned granted summary determination that the Non-Accused OM Products do not infringe claim 13 of the ’322 patent, which was affirmed by the Commission. Order No. 21 at 13-14, *aff’d*, Comm’n Notice, EDIS Doc. ID 804167 (Sept. 11, 2023).

MRI’s initial post-hearing brief contains no infringement arguments regarding the Accused Samsung Large-Sized Products with respect to claim 13. According, any such arguments have been waived and MRI has failed to meet its burden of proof. *Human Milk Oligosaccharides*, Comm’n Op., 2020 WL 3073788, at *13 (June 8, 2020) (burden of establishing infringement lay with complainant with respect to non-accused, adjudicated product); Ground Rule 13.1. Samsung is therefore entitled to a finding of non-infringement of claim 13 for the Accused Samsung Large-Sized Products.

### C. The ’287 Patent

MRI alleges infringement of claim 12 of the ’287 patent. At the evidentiary hearing, MRI presented its infringement case for claim 12 of the ’287 patent primarily through its expert Dr. Pokharna. Dr. Pokharna opined that the Accused Samsung Mid-Sized Products (including the Accused Coates Products and Accused Palmer Products incorporating Accused Samsung Mid-Sized Products) infringe claim 12 of the ’287 patent.

For the reasons set forth below, MRI has not proven by a preponderance of evidence that claim 12 is infringed.

### 1. Claim 12

#### a. Accused Samsung Mid-Sized Products

(i) *Claim element [12pre]: An electronic display assembly comprising:*

There is no dispute that the Accused Samsung Mid-Sized Products comprise an electronic display assembly. RIB at 47-55 (not disputing this claim element). Dr. Pokharna explained, based on his review of the evidence including a Samsung Exploded Views and Parts List, (JX-0120C), and Samsung CAD files, (JX-213C, JX-216C, JX-214C, and JX-215C), that the Accused Samsung Mid-Sized Products are electronic display assemblies. Tr. (Pokharna) at 442:15-443:19.[32]

(ii) *Claim element [12a]: a housing;*

There is no dispute that the Accused Samsung Mid-Sized Products comprise a housing. RIB at 47-55 (not disputing this claim element). Dr. Pokharna explained, based on his review of the evidence including a Samsung Exploded Views and Parts List, (JX-0120C), and Samsung CAD files, (JX-213C, JX-216C, JX-214C, and JX-215C), that the Accused Samsung Mid-Sized Products comprise a housing. Tr. (Pokharna) at 442:15-443:19. Respondents have argued that the "housing" of the Accused Samsung Mid-Sized Products may include *inter alia* both the [redacted] and [redacted]. *See* RIB at 19.[33]

[32] In addition, no party has argued that the preamble is limiting. *See generally* Updated Joint Claim Construction Statement (EDIS Doc. ID 792078).

[33] As with the '595 patent, the parties disagree regarding what precisely constitutes the "housing" in the Accused Samsung Mid-Sized Products. This issue is addressed further with respect to claim element [12c].

(iii) *Claim element [12b]: a liquid crystal display (LCD) positioned within the housing and having a backlight;*

There is no dispute that the Accused Samsung Mid-Sized Products, Accused Coates Products, and Accused Palmer Products comprise a liquid crystal display (LCD) positioned within the housing and having a backlight. RIB at 47-55 (not disputing this claim element). Dr. Pokharna explained, based on his review of the evidence including a Samsung Exploded Views and Parts List, (JX-0120C), and Samsung CAD files, (JX-213C, JX-216C, JX-214C, and JX-215C), that the Accused Samsung Mid-Sized Products comprising a liquid crystal display (LCD) positioned within the housing and having a backlight. Tr. (Pokharna) at 442:15-443:19.

(iv) *Claim element [12c]: wherein the electronic display is coolable by a combination of a closed loop of isolated gas which circulates within the housing and an open loop of ambient air which passes through the housing and along the backlight.*

The parties dispute whether this claim element is present in the Accused Samsung Mid-Sized Products. The parties dispute whether the products comprise an "open loop of ambient air which passes . . . along the backlight"; whether the products comprise a "closed loop of isolated gas which circulates within the housing"; and whether the electronic display is "coolable by a combination" of the asserted closed and open loops. .

For the reasons discussed below, the evidence fails to show by a preponderance that this claim limitation is met by the Accused Samsung Mid-Sized Products because: (1) the evidence fails to show an open loop of ambient air that passes "along the backlight"; (2) the evidence fails to show a "closed loop"; and (3) to the extent a "closed loop" exists in the products, the evidence does not show that the electronic display is "coolable by a combination" of the closed and open loop.

**<u>"open loop of ambient air along the backlight"</u>**

MRI contends that the claimed "open loop" is an air pathway between the "metal plate underneath the closed loop" and what Dr. Pokharna characterizes as the "backlight of the LCD." CIB at 68-69; Tr. (Pokharna) at 456:18-457:8; CDX-0007C at 30; CX-280.2. Dr. Pokharna points to the blue arrow in the demonstrative below as demonstrating the pathway of the open loop ambient air (including the inlet and outlet locations):

[redacted]

CDX-0007C at 30.

MRI argued, and Dr. Pokharna opined, that the aluminum plate depicted above (below the blue arrow) is a thermally conductive plate that forms the back surface of the backlight, and thus the asserted open loop passes "along the backlight." CIB at 68-71; Tr. (Pokharna) at 457:21-458:20. Dr. Pokharna opined that in order for air to flow "along the backlight" it must be "right next to the backlight" and without "significant intervening structures between the ambient air and the backlight" (the existence of which must be determined on a case-by-case basis). Tr. (Pokharna) at 540:7-13, 542:2-13.

Respondents argue that the aluminum plate that MRI identifies is not part of the backlight [redacted]. *See* RIB at 49-51. Respondents rely on Dr. Neikirk's testimony and Mr. Sungsu Lee's testimony about the [redacted] *See* RIB at 50. According to Dr. Neikirk, the [redacted], as depicted in the demonstrative below:

[redacted]

RDX-0003C.0030; Tr. (Neikirk) at 668:25-672:6.[34]

Respondents argue that the [redacted]." RIB at 51 (citing Tr. (Lee) at 600:21-601:4). Another Samsung document, (JX-0206C), depicts a cross-section of the products in which the [redacted]:

[34] Dr. Neikirk testified that this demonstrative is consistent with the CAD files as well as with Mr. Lee's trial testimony. *See* Tr. (Neikirk) at 669:14-669:22.

[redacted]

JX-0206C.00110; Tr. (Lee) at 599:11-600:24. Discussing JX-0206C.00110, Samsung engineer Mr. Lee testified that heat from the LEDs, [redacted]. Tr. (Lee) at 600:25-601:4. On page 18 of the same document (JX-0206C.00018), there is a similar image with an annotation at the bottom stating that the [redacted] JX-0206C.00018. Respondents argue that, applying Dr. Pokharna's interpretation of this claim element as requiring the air to flow "right next to the backlight," "essentially parallel to the backlight," and with no "significant intervening structures between the ambient air and the backlight," this claim element is not satisfied. RIB at 50.

With respect to these arguments, MRI contends that a POSITA would understand a backlight to include more than just the light source. CIB at 70; CRB at 35. MRI argues that the "backlight" in the Accused Samsung Mid-Sized Products [redacted]. *Id.* MRI contends that the '287 patent supports its position regarding the components of the "backlight." *See* CIB at 70; CRB at 36; '287 patent at 5:9-12 ("The rear surface of the backlight 140 may also be metallic, or some other thermally conductive material, to further enhance the convective heat transferring properties.").

The evidence of record does not show, by a preponderance, that the asserted open loop of ambient air passes "along the backlight." MRI's contentions are premised on Dr. Pokharna's testimony that "along the backlight" requires air to flow "right next to the backlight" with "no significant intervening structures" and upon Dr. Pokharna's opinion that the [redacted] (*i.e.*, the "[redacted] of RDX-0003C.0030 and the "[redacted]" of RX-097C) is part of the "backlight." However, Samsung's witness and expert provided persuasive testimony, supported by the documentary evidence, that the [redacted] at issue is [redacted] and thus there is no infringement under MRI's construction of "along the backlight." *See* Tr. (Neikirk) at 668:25-672:6; Tr. (Lee) at 599:11-600:24. MRI has not identified a Samsung document or testimony from a Samsung witness that identifies the [redacted]. To the contrary, Samsung document JX-206C states that the [redacted] indicating that one of ordinary skill would not consider the [redacted] JX-206C.00018. Moreover, while the '287 patent indicates a backlight may have a rear surface that provides a "thermally conductive material" (*see* CRB at 36), this does not mean that any thermally conductive surface would be considered part of the backlight by one of skill in the art.[35] As discussed above, there is evidence that the [redacted]

[35] In the context of invalidity, for example, Dr. Pokharna indicated that a conductive element fastened to the backlight portion of the display would not be considered part of the backlight. *See* Tr. (Pokharna) at 1243:14- 1245:13 (stating that the rear portion of display element 26 in Karpannen is likely to have a backlight but that the conduction element of the first heat transfer part which "presumably . . . is solid in this implementation" and "glued to the back of the surface" is "after the backlight"); RX-1351 at Fig. 2; CDX-0012C at 16.

the metal plate and those structures. *See* Tr. (Neikirk) at 670:9-672:6; JX-206C.00018.[36] In this context, MRI has not shown by a preponderance of the evidence that the "along the backlight" limitation is met.[37]

**"closed loop of isolated gas which circulates within the housing"**

The parties further dispute whether the Accused Samsung Mid-Sized Products include a "closed loop of isolated gas," as well as whether such closed loop circulates "within the housing."

MRI contends that the claimed "closed loop of isolated gas" corresponds to a "cooling chamber" formed between the rear-most cover ([redacted]) and a metal plate underneath that cover which forms an "isolated closed chamber." Tr. (Pokharna) at 444:15-447:14; CDX-0007C at 24-26. That chamber is sealed around the edges and includes fans and electronic components. *See id.* Dr. Pokharna provided a

[36] MRI argues that Mr. Smith-Gillespie's testimony supports MRI's argument because he stated that, besides a "light guide, reflector sheets, and optical film," a "typical backlight may include some additional housings." CRB at 35 (citing Tr. (Smith-Gillespie) at 1074:20-1075:4). Mr. Smith-Gillespie's general testimony about "additional housings" in a "typical" backlight does not provide substantial or sufficient support for MRI's position regarding this accused product. MRI also cites the testimony of Samsung former engineer Sung Ki Kim who testified that [redacted]" (CX-1917C at 83:1-3) and that the [redacted] would include [redacted], and [redacted] and [redacted]." CX-1917C at 95:17-96:9. It is unclear whether components "for a backlight" would be considered components of the backlight itself. Moreover, the light sources here are not "affixed" to the aluminum plate or heat pipe.

[37] Moreover, there is no testimony of record indicating that the [redacted] are insignificant in the context of the product and patent (and MRI does not so argue). MRI also does not assert a doctrine of equivalents claim as to the "along the backlight" element. *See* CIB at 68-71. MRI's position regarding the meaning of "along the backlight," moreover, is generally consistent with the plain and ordinary meaning of "along." *See* Order No. 13, at 55 n.34. To the extent the Examiner took a broader view of the term "along the backlight," the undersigned notes that MRI's arguments are premised on the definition discussed above.

demonstrative in which he illustrated the asserted "closed loop" as depicted below in the areas marked "Electronics":

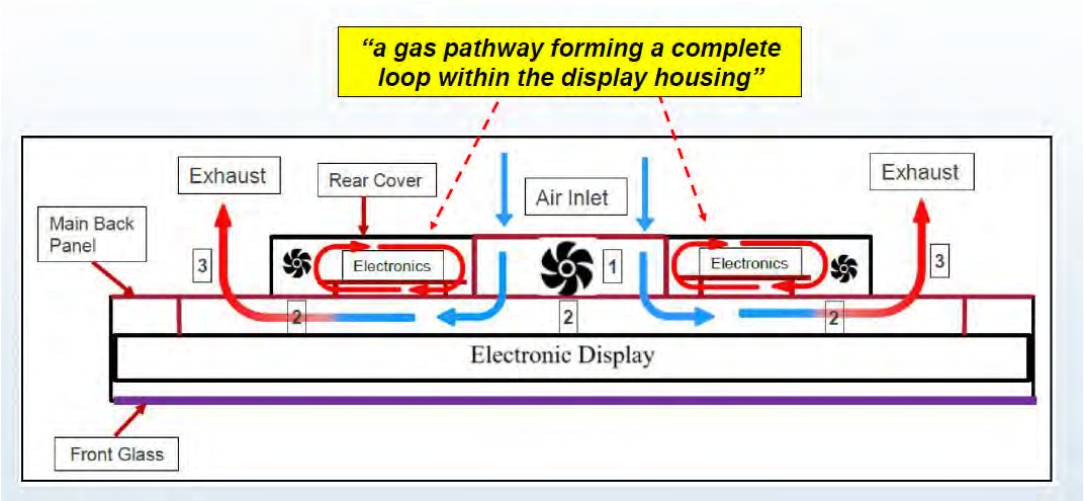


CDX-0007C at 28; Tr. (Pokharna) at 448:22-449:14. While this demonstrative appears to show two separate compartments, Dr. Pokharna agrees that these [redacted]. *See* Tr. (Pokharna) at 446:20-447:11; CDX-0007C at 26; Tr. (Pokharna) at 533:11-24 [redacted]); CDX-0007C at 12. Dr. Pokharna testified that air in this [redacted] provides the claimed "closed loop" because when the fans are turned on, "this creates a closed loop of isolated gas that is circulating within the housing." Tr. (Pokharna) at 445:10-21. This is because [redacted] and [redacted] *Id.* at 449:7-14. MRI also argues that, to the extent the accused devices do not literally have the claimed "closed loop," it is present under the doctrine of equivalents. CIB at 68.

Respondents argue, in opposition, that the asserted closed loop compartment (referred to as the "PCB space" by Respondents) provides "[redacted]" air

because of the location and orientation of the fans and that this fails to set forth a "complete loop." RIB at 47-48. Respondents argue that under this approach "any fan in a box would be a complete loop because eventually a molecule of air that exits the fan would eventually enter the fan" but that such a "fan in a box would not achieve the claimed cooling function." RRB at 27. Respondents argue there is a difference between "randomizing air within the PCB space overall as opposed to circulating it around a pathway therein." *Id.* (emphases omitted).

Upon review of the submissions and evidence of record, the undersigned finds that MRI has not established, by a preponderance of the evidence, that the Accused Samsung Mid-Sized Products comprise a "closed loop." As set forth in the *Markman* Order, the term "closed loop" (as opposed to "open loop") requires a "gas pathway, forming a complete loop within a display housing." Order No. 13, at 45. Here, MRI seeks to interpret and apply "closed loop" in a way that would read onto any fan within an enclosed and isolated space. Here, moreover, the [redacted]. *See* Tr. (Pokharna) at 533:10-17. The undersigned agrees with Respondents that the fans in the accused products appear to accomplish the objective of mixing the air in the space and the evidence fails to show by a preponderance that one of ordinary skill in the art would view such mixing as providing an airflow "loop." *See* RRB at 25-27; Tr. (Neikirk) at 668:13-18.[38]

Further, MRI has not shown that this limitation is met under the doctrine of equivalents. MRI's doctrine of equivalents argument argues that the purpose of the closed loop is "to prevent dust or other contaminates that might negatively affect the product while also, in combination

[38] MRI relies on a Samsung development document showing [redacted]. *See* CRB at 31-32; CX-1857C.00028. This document only shows [redacted], but fails to identify [redacted].

with the open loop, providing cooling for the product." MRI provides only attorney argument in support of its doctrine of equivalents argument, and the showing is insufficient. *See* CIB at 68; RRB at 27. Moreover, as discussed below, the evidence fails to show by a preponderance that the electronic display is coolable by a combination of the asserted open and closed loops.

Moreover, as discussed *infra*, even if this compartment did qualify as a "closed loop," the evidence fails to show by a preponderance that the electronic display is "coolable by a combination" of the asserted open loop and asserted closed loop.[39]

**"the electronic display is coolable by a combination"**

MRI argues that the claimed display is coolable by a combination of the asserted closed loop and open loop airflows. CIB at 71-73; *see also* CRB at 37-43. In support, MRI primarily relies upon the deposition testimony of Samsung engineer, a Samsung presentation to [redacted] and Dr. Pokharna's testimony regarding this issue. *See id.* MRI further argues that certain temperature testing provided by Dr. Neikirk is not relevant or conclusive. *Id.* Respondents argue, in opposition, that the [redacted] *Id.* at 51. Respondents rely on the testimony of Dr. Neikirk, as well as certain temperature testing he performed. *See id.* at 53-55.

MRI has not shown, by a preponderance of the evidence, that the Accused Samsung Mid-Sized Products are coolable by a "combination" of the asserted closed and open loops. It appears undisputed that this claim limitation requires both the claimed closed and open loops to

[39] To the extent there is a "closed loop," however, the undersigned finds that such loop circulates "within the housing" for the same or similar reasons as discussed above for claim 1 of the '595 patent. The "housing" corresponds to external facing portions including the rear cover (or "cover-main" according to Samsung documents) as well as externally-facing portions of the "cover-main." Respondents do not dispute that the asserted closed loop chamber is located between the cover-main and cover-rear. *See* RIB at 49.

contribute to the cooling of the display (and is not met, for example, by only one of the loops serving to cool the display). *See* CIB at 71 (discussing evidence that the "closed loop aids in cooling the electronic display"); *see also* Tr. (Pokharna) at 460:2-14.[40] It also appears undisputed that the claim requires contributions to cooling the "display" and not simply cooling the product as a whole or cooling non-display components of the device. *See* '287 patent, cl. 12 (claiming "a liquid crystal display (LCD)" wherein "***the electronic display*** is coolable . . .") (emphasis added).[41]

Here, the evidence fails to show by a preponderance that the asserted closed loop of isolated air contributes to the cooling of the display. The evidence shows that the fans in the asserted closed loop area [redacted]. *See* JX-208C.0095 [redacted]) (emphasis added); RRB at 32. Dr. Pokharna's primary argument is that the [redacted], and thus [redacted] ([redacted]). *See* Tr. (Pokharna) at 459:14-460:14; CIB at 71-72 (arguing that [redacted]

[40] This approach is consistent with the plain and ordinary meaning of "combination" and the intrinsic evidence. *See, e.g.*, '287 patent, Abstract ("An electronic display may be positioned within a housing where the display is cooled by a combination of airflows . . . Preferably, the closed loop of isolated gas cools the front surface of the display while the open loop of ambient air cools the rear surface of the display.").

[41] The patent recognizes that a "liquid crystal display" is one form of "electronic display." *See* '287 patent, cl. 10 ("the electronic display is selected from the group consisting of a liquid crystal display . . .").

[redacted]—thereby [redacted]. But the evidence is insufficient to show this effect by a preponderance. MRI relies upon the testimony of Sung Ki Kim, but Mr. Kim simply testified that the [redacted] provided the purpose "as stated" in the relevant document. *See* CIB at 71; CX-1917C at 89:10-18. The document itself, as discussed above, does not refer to cooling the "display." *See* JX-208C.0095; RRB at 31-33.

MRI also relies on a Samsung presentation to [redacted] which MRI contends shows that the [redacted] CIB at 72 (citing JX-0206C.95). However, while this document may show that the overall design of the product (which separates certain components from the display) results in a better overall cooling performance than a conventional design, this is insufficient to show that, in the accused products, the [redacted]. *See* RRB at 31, 33; Tr. (Lee) at 602:15-603:3; JX-0206C.00111.[42]

In addition, Dr. Neikirk provided countervailing testimony that the back cover of the product is made of plastic (an insulator) and that he would therefore expect most or "almost all" heat in the [redacted] path, rather than through the plastic back. *See* Tr. (Neikirk) at 672:15-673:25; RDX-3C.0032. In this context, Dr. Pokharna's "basic physics" contentions (Tr. at 466:2-3)—unsupported by actual data regarding the thermal operation of the asserted closed loop, and relying on unpersuasive interpretations of

[42] Moreover, even if the [redacted], this does not show that the closed loop aids in cooling the display. *See* RRB at 31 ("this argument ignores whether the alleged closed loop cools the display at an absolute level").

JX-1917C and JX-0206C—is insufficient to carry MRI's burden of proof. *See* Tr. (Pokharna) at 462:6-22; *id.* at 467:4-12.[43, 44]

**b. Indirect Infringement**

MRI further argues "Samsung induces and contributes to infringement by its customers, including Palmer and Coates." CIB at 73-74. Because there is no direct infringement, however, there is no indirect infringement.

**c. Non-Accused Products[45]**

(i) *The Accused Samsung Large-Sized Products do not infringe claim 12.*

Samsung has sought an adjudication of non-infringement as to claim 12 of the '287 patent as to the Accused Samsung Large-Sized Products (which are not accused products as to this patent). *See* RIB at 55. As discussed *supra*, the *Oligosaccharides* factors favor adjudication of these products. *See* Order No. 21 at 9-11, 21-22.

MRI's initial post-hearing brief contains no infringement arguments regarding the Accused Samsung Large-Sized Products with respect to claim 12. According, any such arguments have been waived and MRI has failed to meet its burden of proof. *Human Milk Oligosaccharides*, Comm'n Op., 2020 WL 3073788, at *13 (June 8, 2020) (burden of establishing infringement lay with complainant with respect to non-accused, adjudicated

---

[43] Dr. Neikirk also conducted his own testing which he concluded shows that the [redacted]. *See* RIB at 53-55. The undersigned finds this data inconclusive given that it is unclear whether data should have been collected under other or additional circumstances. *See* Tr. (Pokharna) at 467:16-469:15.

[44] On reply, MRI argues that Dr. Neikirk "admitted to the presence of [redacted] in the current [redacted] products." CRB at 41-42. This argument was not made in MRI's initial post-hearing brief and is therefore waived. *See* CIB at 64-68, 71-73; Ground Rule 13.1.

[45] The Non-Accused OM Products were found to be non-infringing, with respect to claim 12, in Order No. 21.

product); Ground Rule 13.1. Samsung is therefore entitled to a finding of non-infringement of claim 12 for the Accused Samsung Large-Sized Products.

(ii) *The* [redacted] *Redesigns do not infringe claim 12*

Respondents assert that the four *Oligosaccharides* factors weigh in favor of adjudicating the redesigned [redacted] products and that they do not infringe claim 12 of the '287 patent. RIB at 12-16. Respondents contend that it is undisputed that the redesigned products are within the scope of this investigation. *Id.* at 13. Respondents state that the redesigned products have been imported. *Id.* Respondents contend that the products are fixed in design because they are operational, regardless of whether they are ready for commercialization. *Id.* at 14. Respondents argue that the redesigns sere sufficiently disclosed during discovery because, prior to the close of fact discovery, Respondents physical samples of the redesigned products for inspection, produced CAD files and photographs, made a corporate witness for deposition, and disclosed the differences between the redesigned products and original products. *See id.* at 15-16.

MRI argues that the redesigned products are not properly subject to adjudication because Samsung has not presented sufficient evidence that the redesigned products "have a fixed structure or design" and because Samsung's "conflicting productions on its purported redesigns were provided to MRI too late, depriving MRI of a fair opportunity to take discovery and obtain expert opinions. CIB at 74-82. MRI contends that Samsung originally produced CAD files that showed [redacted], but later provided photographs and CAD files that were [redacted], and that the conflicting evidence regarding which [redacted]. *See id.* at 74-78. MRI states that it "deemed it unnecessary" to travel to inspect the product to evaluate infringement because Samsung had produced CAD files

on February 28 2023. *Id.* at 76 n. 1. MRI states that Samsung's corporate representative "struggled to answer basic questions as to the 'updated' design despite his designation to testify as a corporate representative on the topic." *Id.* at 77. MRI contends that Samsung produced CAD files "that it contends accurately show the redesigns" only two days before the close of discovery, after Samsung's corporate witness was produced, and over a week after MRI's extended deadline for serving final infringement contentions on the redesign. *Id.* at 78. MRI states that, with respect to Samsung's proffer of an additional corporate representative on the updated CAD files, MRI did not have a fair opportunity to review them before the deposition. *Id.* at 78-79. MRI contends that there has been [redacted] or that the product [redacted] *Id.* at 80. MRI states that that there is no evidence that "the redesigns are designed to [redacted] *Id.* at 81. In its reply submission, MRI argues that the photographs produced "on the eve of the deposition of Wunkil Lee," Samsung's corporate representative, showed "[redacted] while others did not have [redacted] (but still had [redacted] and [redacted] for [redacted])." *Id.* at 4. MRI argues that testimony at the hearing which conflicted with the deposition testimony of Samsung's corporate representative should be disregarded. *Id.* at 6-7.

The undersigned finds that the *Oligosaccharides* factors favor adjudication of the redesigns at issue. It is undisputed that the redesigned products fall within the scope of the investigation. *See* RIB at 13; 87 Fed. Reg. 58132, 58133 (Sept. 23, 2022). The evidence also shows that the redesigns have been imported. *See* RIB at 13; CX-1909C (W. Lee Dep. Tr.) at 91:9-17; Tr. (Lee) at 623:6-22. MRI does not dispute that these two factors favor adjudication.

The evidence further shows that the redesigned products were sufficiently disclosed during discovery. As discussed in Order No. 25 and the underlying submissions, the evidence shows *inter alia* that the redesigned products were disclosed by February 28, 2023 with samples "available for inspection"; that Respondents provided clear notice on March 19, 2023 that the CAD files produced on February 28 improperly omitted the [redacted] and provided photographs of the redesigns; that a corporate witness testified regarding the redesigns on March 21; and that corrected CAD files were produced on March 21. *See* Order No. 21 at 3-4; Respondents' Opposition to Complainant's Motion in Limine No. 2 (EDIS Doc. ID 798497) ("Resp. MIL 2 Opp.").[46] The evidence also shows that Samsung's corporate witness testified at his deposition regarding photographs of the redesigns and changes made in the redesigns, including that the redesigned products [redacted] and included the [redacted]. *See* CX-1909C (W. Lee Dep. Tr.) at 88:7-11, 89:21-90:7, 90:9, 98:22-99:10; *id.* at 88:7-89:14 (testifying that there are [redacted] in the photograph of the redesigned product). The record further shows that MRI's expert, Dr. Pokharna, was able to serve an expert report stating that in photographs provided by Samsung, the [redacted] remained while the [redacted] were removed. *See* Resp. MIL 2 Opp. at 6 and Ex. 8 ¶¶ 262-63 ("I further understand that Samsung submitted photographs of the [redacted] updated design . . . Those photographs indicated that the [redacted] of the [redacted]. However, the [redacted]."). Respondents' expert, Dr. Neikirk, also provided expert disclosures on these products. *See* Resp. MIL 2 Opp. at 7 and Ex. 13 ¶¶ 366-69. In light of these facts (and others discussed in Order No. 21 and Resp. MIL 2 opposition), the undersigned finds

[46] Fact discovery closed on March 24, 2023. *See* Order No. 7.

that the redesigns were sufficiently disclosed during discovery. MRI's contention that discovery failed to adequately disclose whether or not the [redacted] fans were present in the redesigns is unpersuasive. *See Certain Human Milk Oligosaccharides and Methods of Producing the Same*, Inv. No. 337-TA-1120, Comm'n Op., 2020 WL 3073788, at *12 (June 8, 2020) ("*Oligosaccharides*") (Respondents are "required to provide sufficient (not extensive) fact and expert discovery to put [complainant] on notice of that [product] and its relevant features").

Finally, the evidence shows that the redesigned products are sufficiently fixed in design. The evidence indicates that Samsung made samples of the redesigned products available for inspection and Samsung's corporate witness testified at his deposition that physical samples of the redesigns were shipped to the United States. CX-1909C at 102:20-103:11; CIB at 76 n.1; RIB at 14. At the hearing, Dr. Neikirk testified that he had inspected the redesigned products and found that they do not include the [redacted] and do include the [redacted] Tr. (Neikirk) at 649:25-650:9: 682:19-684:7. At the hearing, physical exhibits of the redesigned [redacted] models were discussed and admitted into evidence. *See* Tr. (Lee) at 623:6-22; RPX-0007; RPX-008; RIB at 13-14. While MRI contends that there is insufficient evidence that these redesigns have completed development, the Commission "does not require that a redesign involve a commercial product in order to be adjudicated." *Certain Unmanned Aerial Vehicles and Components Thereof*, Inv. No. 337-TA-1133, Comm'n Op., 2020 WL 5407477, at *13 (Sept. 8, 2020). For example, in *Certain Electronic Devices, Including Streaming Players, Televisions, Set Top Boxes, Remote Controllers, and Components Thereof*, redesign products were found to be sufficiently fixed in design where respondents produced physical samples in discovery, although the documentation for the redesign products had not been updated and the products were not ready for mass

production. Inv. 337-TA-1200, Final Initial Determination at 90-91, EDIS Doc. ID 747669 (July 9, 2021), *not reviewed in relevant part* by Comm'n Notice at 3 (September 9, 2021). In *Certain Mobile Devices with Multifunction Emulators*, redesigns were found to be "sufficiently fixed in design" although the design did "not seem to be commercially feasible" and respondent had not completed "testing necessary to be released to the market." Inv. No. 337-TA-1170, Final Initial Determination at 10-16, EDIS Doc. ID 738549 (Mar. 16, 2021).[47] *See also Oligisaccharides*, 2020 WL 3073788, at *12 (finding bacterial strain sufficiently fixed in design where there was witness testimony regarding development and use of the strain, as well as records showing that Respondent has "actually produced" certain oligosaccharides using the strain); *Certain Audio Players and Controllers, Components Thereof, and Products Containing Same*, Inv. No. 337-TA-1191, Order No. 19, 2020 WL 6441406, at *2 (Sept. 4, 2020) ("Google has produced source code for the alleged redesigns and has made physical devices incorporating the source code available for inspection . . . The evidence therefore shows that the redesigns are sufficiently fixed such that an infringement determination can be made."); *Certain Flocked Swabs, Prods. Containing Flocked Swabs, and Methods of Using Same*, Inv. No. 337-TA-1279, Initial Determination, at 36 (Jan. 3, 2023) (EDIS Doc. ID 787166) ("the fact that [Respondent] may ultimately use a different redesign product does not mean that the particular redesigns already manufactured and provided in litigation were not sufficiently fixed"), *unreviewed in relevant part* by Comm'n Notice (March 17, 2023, EDIS Doc. ID 792679).

For these reasons, the undersigned concludes that the [redacted] redesigns should be adjudicated. Further, MRI has provided no argument that the redesigned products

[47] Both of these determinations cite the Commission's opinion in *Certain Unmanned Aerial Vehicles and Components Thereof* where, unlike here, there was no complete product produced until a month after the close of fact discovery.

infringe the '287 patent and thus has not met its burden of proving infringement. *See* CIB at 74-82 (arguing only that the products should not be adjudicated); *Oligosaccharides*, 2020 WL 3073788, at *5, 13 (finding complainant had "failed to satisfy its burden of establishing infringement" with respect to non-accused product for which adjudication was requested).[48] Accordingly, the evidence of record supports a finding of non-infringement as to the redesigned products at issue.

### D. The '740 Patent

MRI alleges infringement of claims 1 and 5 of the '740 patent by the Accused Samsung Large-Sized Products. *See* CIB at 82.

For the reasons set forth below, MRI has proven by a preponderance of evidence that the Accused Samsung Large-Sized Products infringe claims 1 and 5 of the '740 patent.

#### 1. Claim 1

##### a. Accused Samsung Large-Sized Products

(i) *Claim element [1pre]: An electronic display comprising:*

There is no dispute that the Accused Samsung Large-Sized Products are electronic displays. CIB at 83-84; RIB at 57-67 (not disputing this claim element). Dr. Pokharna testified that the Accused Samsung Large-Sized Products are electronic displays based on his review of Samsung documentation. Tr. (Pokharna) at 482:8-19 (referring to JX-138C and JX-162C).[49]

[48] In addition, Mr. Smith-Credelle provided testimony at the hearing regarding non-infringement. *See* RIB at 56.

[49] In addition, no party has argued that the preamble is limiting. *See generally* Updated Joint Claim Construction Statement (EDIS Doc. ID 792078).

(ii) *Claim element [1a]: an electronic image assembly having a front portion and a rear portion;*

There is no dispute that the Accused Samsung Large-Sized Products comprise an electronic image assembly having a front portion and a rear portion. *See* CIB at 83-84; RIB at 57-67 (not disputing this claim element). Dr. Pokharna testified that the Accused Samsung Large-Sized Products comprise an image assembly having a front portion and a rear portion based on his review of Samsung documentation. Tr. (Pokharna) at 482:8-22 (referring to JX-0138C and JX-0162C).

(iii) *Claim element [1b]: an open loop ambient air flow path behind the rear portion of the electronic image assembly;*

There is no dispute that the Accused Samsung Large-Sized Products comprise an open loop ambient air flow path behind the rear portion of the electronic image assembly. CIB at 84-86; RIB at 57-67 (not disputing this claim element). Dr. Pokharna testified that the Accused Samsung Large-Sized Products are electronic displays comprising an open loop ambient air flow path behind the rear portion of the electronic image assembly. Tr. (Pokharna) at 482:23-483:22 (referring to JX-0138C, JX-0172C, and JX-0240C). The "open loop ambient air flow path" is depicted below in connection with the discussion of claim element [1c]. *See infra*; JX-0204C.0004; JX-0172C.0006; JX-0310C.00003.

(iv) *Claim element [1c]: a closed loop gas circulation path about the electronic image assembly;*

The parties dispute whether the Samsung Accused Large-Sized Products include a "closed loop gas circulation path about the electronic image assembly." RIB at 57-67; RRB at 36-40; CIB at 86-96; CRB at 44-50. As discussed in the *Markman* Order, the term "closed loop" means "a gas pathway forming a complete loop within a display housing." *See* Order No. 13.

**<u>The Parties' Arguments:</u>**

MRI contends that the Samsung Accused Large-Sized Products include a closed loop path based on the testimony of its expert, Dr. Pokharna, as well as certain Samsung documents and testimony from Sung Ki Kim. MRI provides specific evidence regarding the OH85F product as well as testimony that this product is representative of the accused large-sized products. *See* CIB at 82-83.

MRI argues that Samsung's schematics and product specifications show a pathway of a closed loop around the display. CIB at 86 (citing Tr. (Pokharna) at 487:18-25 and JX-0172.6). MRI argues that Samsung's internal flow modeling [redacted]. *Id.* at 86-867 (citing Tr. (Pokharna at 488:1-17), JX-203C.9, and JX-0209C at 29107). MRI further relies on deposition testimony from former Samsung engineer Sung Ki Kim regarding the [redacted]. *Id.* at 88 (citing CX-1917C). MRI argues that Dr. Neikirk's analysis and testing is unreliable, irrelevant under the proper construction, and in any case the evidence shows that the accused products have an "internal flow path that is both substantially free of dust or other contaminates and is essentially isolated from external air," as shown by the IP56 rating of the displays. *Id.* at 89-97. MRI argues that the [redacted] fails to indicate non-infringement because: (1) at least the [redacted] inspected by Dr. Pokharna [redacted]; and (2) [redacted], the product has a "closed loop" because *inter alia*, the [redacted] and operate in [redacted]. *Id.*; *see also* CRB at 44-50.

MRI further argues that, even if there is no direct infringement regarding this limitation, there is infringement under the doctrine of equivalents. CIB at 93. MRI asserts that the products

are designed to perform substantially the same function in substantially the same way to achieve substantially the same result, *i.e.* "circulating an internal flow path of air separately from the ambient flow path of air so that dust and moisture in the ambient air flow path cannot enter to the extent that they would harm the interior of the display." *Id.*; see also CRB at 44-50.

Respondents argue that the evidence fails to show infringement, relying in large part on the testimony of its expert Dr. Neikirk, as well as the hearing testimony of Mr, Sungsu Lee. Respondents rely primarily on the [redacted] in the [redacted] (of [redacted]), arguing that the non-infringement evidence relied upon by MRI does not take into account these [redacted]. *See* RRB at 37. Respondents assert that [redacted] in the [redacted] of the products allow [redacted]. RIB at 57-58. The location of the [redacted] and the [redacted] are shown in photographs

[redacted]

RDX-3.71 and Tr. (Neikirk) at 708:19-710:19.

Respondents assert that the [redacted] are located in the [redacted] of the [redacted], and that [redacted] RIB at 58 (citing Tr. (Lee) at 616:11-15). Respondents also assert that the ambient air

is then [redacted]." RIB at 59. Respondents argue that certain smoke and VOC testing conducted by Dr. Neikirk confirm that [redacted]." RIB at 61-63. Respondents argue that this testing is consistent with Samsung's internal testing, a computational fluid dynamics (CFD) model constructed by Dr. Neikirk to [redacted] and a CFD simulation conducted by Samsung. *Id.* at 63-64 (citing *inter alia* Tr. (Neikirk) at 719:3-720:24, RDX-0003.0077, RX-1085C-A, RX-01085C-B). Respondents argue that an IP56 rating does not establish the existence of a closed loop because "[e]ven Dr. Pokharna recognized that entirely open loop systems that use filters can nonetheless be rated IP56," and further contend that MRI relies on "undated or outdated concept diagrams and flow simulations." RRB at 37-38. With respect to the doctrine of equivalents, Respondents argue that any doctrine of equivalents argument fails because the products are substantially different [redacted]. RRB at 39-40.

**Analysis**

The undersigned finds that the evidence of record shows, by a preponderance, that the Accused Samsung Large-Sized Products include the claimed "closed loop."

The evidence shows that the Samsung Accused Large-Sized products include an airflow pathway around the display that forms a complete loop. Dr. Pokharna testified that, according to Samsung documentation, the Accused Large-Sized Products [redacted]. Tr. (Pokharna) at 478:22-481:20; CDX-7C at 58-63 (reproducing JX-204C.0004). The internal cooling path is depicted in one of Samsung's documents as follows:

[redacted]

JX-0204C.0004 (document entitled Samsung OHF 75/85" and identified on the Joint Exhibit List as "Samsung Cooling System More (75_85).pptx). Dr. Pokharna testified that, in the [redacted] Tr. (Pokharna) at 481:6-20; CDX-7C at 63. He provided a demonstrative showing this [redacted] and its relation to the [redacted] as follows:

[redacted]

CDX-7C at 63.

Dr. Pokharna's testimony regarding the internal cooling air pathway is generally consistent with testimony provided by Samsung engineers. Samsung engineer Sung Ki Kim agreed that [redacted] CX-1917C (Sung Ki Kim Dep. Tr.) at 105:10-15.[50] He further testified that, according to a document that he characterized as [redacted] (*id.* at 104:13-15)[51] the [redacted]

[50] Sung Ki Kim worked as a senior engineer and then principal engineer at Samsung from around 2004 or 2005 through October 2022. CX-1917C (Kim Dep. Tr.) at 15:21-16:4, 31:5-11, 41:2-17. At the time of his deposition he worked at Intel as a thermal architect. *Id.* at 15:17-20. While at Samsung, Mr. Kim managed product development (specifically, the technical side of heat dissipation technology) of Samsung's outdoor LCD displays, including the design of the "concept and technical aspect" of the product. *See id.* at 42:3-21, 43:7-20. He was familiar with technical aspects of the OHF products, including the 75-inch and 85-inch products as [redacted]. *See id.* at 56:15-57:17, 64:9-11, 15-17, 19-21; 65:2-6; 152:22-159:15.

[51] This document was marked as Exhibit 7 (SEITC0017466-7557) at Mr. Kim's deposition and was admitted into evidence at the hearing as JX-0172C. *See* CX-1917C (Kim Dep. Tr.) at 103:17-21; JX-0172C. The deposition testimony was provided in relation to page SEITC0017471 of JX-0172C (entitled Training Manual OHA LFD OH75A), which provides a figure similar to JX-0204C.0004 depicted above. *See* JX-0172C.00006. A similar figure is also set forth in JX-203C, at JX-203C.00001. Another similar figure is shown in JX-310C. *See* CX-1917C (Kim) at 149:10-151:10; JX-310C.00003.

[redacted] and the [redacted], and then [redacted]. CX-1917C at 111:6-113:14. Mr. Kim testified that, within the [redacted]. *Id.* at 107:2-11. Another Samsung engineer, Mr. Sungsu Lee, testified that, with respect to the OH75 product, "[redacted]," and that in the [redacted]," then to the [redacted], and then [redacted] CX-1908C at 120:22-122:5; *id.* at 128:10-132:11.

In arguing non-infringement, Samsung primarily relies on the evidence regarding the [redacted] in the accused products. *See* RIB at 57-67.[52] As discussed above, Samsung argues that that the [redacted] allow ambient air to enter into the internal air pathway and that there is therefore no "closed loop."[53]

Based on review of the evidence as a whole, the record does not indicate that the presence of the [redacted] means that the "closed loop" limitation is no longer met. While the evidence shows that the [redacted] (CX-1917C at 147:2-11), there is no indication that the [redacted] and [redacted] was eliminated through the

[52] The Accused Samsung Large-Sized Products each have three heat exchangers. The [redacted] were [redacted]—in particular, on [redacted]. *See* Tr. (Lee) at 615:11-616:4; RPX-0009; CX-1908C (Lee) at 143:19-144:10 (for large-sized products, there are three heat exchangers, the [redacted]"). The evidence indicates that [redacted]. Tr. (Pokharna) at 490:9-13.

[53] Respondents present no specific evidence disputing that the products at issue [redacted]. *See, e.g.*, RRB at 37 n.14 ("to the extent there is any infringement, [redacted]"); *see also* CRB at 44 n.7.

addition of these [redacted]. The evidence indicates that the addition of the [redacted]. *See* CX-1917C (Kim Dep. Tr.) at 148:6-11 and Kim Dep. Ex. 11 (SEIT035959-5963, at SEIT0035961) (JX-310C); *id.* at 152:1-2, 154:16-155:16 (testifying that with the addition of the [redacted], [redacted]"). However, the [redacted] does not mean there is no "closed loop" for purposes of the '740 patent (or '142 patent). As discussed in the *Markman* Order, a "closed loop" is a gas pathway that forms a "complete loop" within the display housing (*e.g.*, a path that circles back upon itself). *See* Order No. 13, at 42-51. This is consistent with the specification's contrast between a "closed loop" in which gas circulates and returns to its starting location versus an "open loop" consisting of a path of ambient air. *See id.* at 46-47. The specification of the '740 patent makes clear, however, that the two loops need not be entirely separate, and that some amount of ambient air may mix with the circulating air in the closed loop. *See* '740 patent at 6:51-59 ("Since gas for the open loop may contain various contaminates, a preferable embodiment should be adequately sealed to prevent the gas from the two loops from mixing. ***This is not necessary, however, as filters (either removable or permanent) may be used to minimize the effect of particulate for both the open and closed loops***.") (emphasis added); Order No. 13, at 48-49. Accordingly, the addition of [redacted] in the Accused Large-Sized Products that permit some entry of ambient air does not mean that the "internal pathway" moving through the heat exchanger is no longer a "closed

loop" so long as one of ordinary skill in the art would view the asserted gas pathway, considered as a whole, to provide a "complete loop."[54]

Here, with respect to the addition of [redacted], Mr. Sungki Kim testified that [redacted] and [redacted]." CX-1917C (Sung Ki Kim Dep.) at 147:2-3, 10-11; *id.* at 159:11-15.[55] Consistent with this testimony, Dr. Pokharna provided unrebutted testimony, based on Samsung's specification for the [redacted], estimating an [redacted] cubic feet per minute (CFM). *See* Tr. (Pokharna) at 493:15-495:20; CDX-7C at 92-93; JX-242C. No testimony indicates that this [redacted].[56] Also consistent with this testimony, Samsung witness Sungsu Lee testified that [redacted]. Tr. (Lee) at 638:18-21.

---

[54] Respondents incorrectly interpret the '142 patent prosecution history's treatment of Sato and the *Markman* Order to suggest that as long as any ambient air "enters and exits" the alleged closed loop, there is no closed loop. *See* RRB at 36-37. The Sato reference discussed in the *Markman* Order provides a gas pathway that, considered as a whole, enters from ambient air and exits to ambient air, and thus the airflow pathway has a general entrance and exit. *See* Order No. 13 at 49 n.28; RXM-0023 at 9:3-8, Fig. 4 (attached to Respondents' Rebuttal Markman Brief, EDIS Doc. ID 790449). Respondents' suggestion that a loop which allows any ambient air to enter is an "open loop" and not a "closed loop" contradicts the patent specification, as discussed above, and is not required by the prosecution history's discussion of Sato.

[55] Mr. Kim further testified that although the OH75 and 85 inch products have a [redacted] there "[redacted]." CX-1917C at 110:8-22, 111:2-5, 155:3-16. This testimony is consistent with his statement that the addition of [redacted] had only a small effect, since in [redacted], the evidence indicates that [redacted]. *See id.* at 107:17-108:22; *see also* Tr. (Pokharna) at 1279:12-16 (open loop technology obtaining IP56 rating "required frequent filter changes").

[56] To the contrary, Respondents stated in their prehearing brief that a [redacted] through the [redacted] would be equivalent to replacing the air in the unit "roughly every minute." Resp. Prehearing Br.at 76. Respondents presented no testimony at the hearing controverting Dr. Pokharna's estimate of the flow rate, which is approximately 500 times less than the [redacted] discussed in Respondents' prehearing brief. *See* Tr. (Pokharna) at 494:25-495:4.

Given the evidence discussed above (including from Samsung's own engineer regarding the "[redacted]"), the evidence as a whole shows, by a preponderance, that the Accused Large-Sized Products continue to have a "closed loop." *See* Tr. (Pokharna) at 492:10-25 (claim limitation is met in Samsung Large-Sized Products through loop flowing about the display even if there are some [redacted]). Indeed, the evidence of record shows that these products operate in a similar manner to the "closed loop" contemplated by the '740 patent specification, in which a closed loop may be exposed to some extent to ambient air, with filters operating to minimize the effect of particulate in the closed loop. *See* '740 patent at 6:49-59 (it is "not necessary" to prevent "gas from the two loops from mixing," as "filters (either removable or permanent) may be used to minimize the effect of particulate for both the open and closed loops"); *see also id.* at 5:25-30 (gas in closed loop "preferably" is "substantially free of contaminates and/or particulate" so as to "prevent an adverse effect on the image quality and damage to the internal electronic components").[57]

Dr. Neikirk's testing data is unpersuasive in this context. While he testified that his smoke and VOC (volatile organic compound) testing showed the ability of ambient air to "[redacted]

[57] The evidence indicates that the Accused Large-Sized Products have an IP (ingress protection) rating of "IP56," and that Samsung represents the products in its marketing materials to be capable of "fully perform[ing] in heat, cold, rain, snow and dust.". *See* Tr. (Pokharna) at 491:25-492:9; CDX-0007C.90; CX-1711; JX-0156C; JX-0154C; CIB at 90; CRB at 45-46; Tr. (Pokharna) at 448:3-8, 569:2-5, 569:22-570:4 (the "first digit of 5 means that the product is dust protected" and "if a product has 5 rating for dust, it is impervious to dust to the extent that it could harm the operation of this device"); *see also* Tr. (Brown) at 237:15-25 (explaining IP ratings). Further, Samsung documentation that discusse [redacted] " and that [redacted]." Tr. (Pokharna) at 491:15-24; CDX-0007C.89; JX-0242C ("Calculation" tab); *see also* CIB at 91-93. In the context of invalidity, Respondents argue that characterization of a casing as "weatherproof" means that it meets the requirements for a "closed loop of isolated gas." *See* RRB at 55 n.19. Respondents also argue that an IP56 rating indicates that gas is "substantially free of dust or other contaminates." *See* RIB at 108.

[redacted]" (Tr. (Neikirk) at 728:1-4), the undersigned finds this testimony less probative than the countervailing evidence, including that of Mr Sungi Kim regarding the "[redacted]" shown by Samsung testing, Dr. Pokharna's estimate of flow rate based on Samsung's own specifications, and Mssrs. Kim's and Lee's testimony indicating that the products have an "internal flow" path. *See* discussion *supra*. Moreover, as discussed by Dr. Pokharna, Dr. Neikirk's testing used a non-standard protocol creating a feedback loop into the system not present during the ordinary operation of the unit—and, in fact, controverting Samsung's instructions regarding proper operation of the unit). *See* Tr. (Pokharna) at 498:16-500:1; CDX-7C at 97; CX-44C.5; CIB at 95; Tr. (Neikirk) at 763:17-765:18 (did not disclose any testing without the feedback loop); CIB at 94-95.[58]

Samsung also contends that the documents relied upon by Dr. Pokharna are "simplified drawings which . . . do not entirely explain how air flows inside the currently sold Large-Format Displays." RRB at 36. However, other than the addition of [redacted], Samsung has not pointed to any difference between the documentation and the actual products that it contends materially affects the existence of a "closed loop." *See* RIB at 57-67.[59]

---

[58] Similarly, Mr. Lee's testimony that "[redacted]" is [redacted] is unpersuasive, including because that his testimony regarding verification was impeached by his deposition testimony. *See* Tr. (Lee) at 616:13-15; *id.* at 638:2-17.

[59] Samsung failed to argue non-infringement in its initial post-hearing brief based on any specific other differences between the drawings in its production documents and the actual products and thus such arguments have been waived. Ground Rule 13.1. Moreover, as discussed above in connection with the "constricted convection plate" issue, Samsung has argued that the schematics fail to show the ability of the internal flow path of the large-sized products to enter the PCB space. But, accepting this testimony as accurate, there is no indication that this means there is no internal flow path that circulates around the display. *See, e.g.*, CX-1908C (Lee) at 131:7-11 (testifying that [redacted], and then [redacted]).

Accordingly, based on the undersigned's review of the record as a whole and the considerations discussed above, the evidence shows, by a preponderance, that the Accused Samsung Large-Sized Products meet the "closed loop" limitation of the '740 patent.[60]

(v) *Claim element [1d]: a common heat exchanger located in the pathway of both the closed loop gas circulation path and the open loop ambient air flow path;*

There is no dispute that the Accused Samsung Large-Sized Products comprise a common heat exchanger located in the pathway of both the asserted closed loop gas circulation path and the open loop ambient air flow path. CIB at 96-97; RIB at 57-67 (not disputing this claim element). Dr. Pokharna testified that the Accused Samsung Large-Sized Products comprise a common heat exchanger located in the pathway of both the asserted closed loop gas circulation path and the open loop ambient air flow path. Tr. (Pokharna) at 484:6-16; CDX-7C.75; JX-172C.

(vi) *Claim element [1e]: a gas circulation device positioned to force circulating gas through the common heat exchanger; and*

There is no dispute that the Accused Samsung Large-Sized Products comprise a gas circulation device positioned to force circulating gas through the common heat exchanger. CIB at 96-97; RIB at 57-67 (not disputing this claim element). Dr. Pokharna testified that the Accused Samsung Large-Sized Products comprise a gas circulation device (a fan) positioned to force circulating gas through the common heat exchanger. Tr. (Pokharna) at 484:6-16; CDX-7C.75; JX-172C.

[60] Because the undersigned finds direct infringement, it is not necessary to reach MRI's doctrine of equivalents argument. *See* CIB at 93. Moreover, to the extent there is no direct infringement, whether a doctrine of equivalents argument would be successful would depend on the reasons for the lack of direct infringement (including whether a different claim construction is appropriate or issues of fact are differently determined).

(vii) *Claim element [1f]: an air circulation device positioned to force ambient air through the common heat exchanger.*

There is no dispute that the Accused Samsung Large-Sized Products comprise an air circulation device positioned to force ambient air through the common heat exchanger. CIB at 96-97; RIB at 57-67 (not disputing this claim element). Dr. Pokharna testified that the Accused Samsung Large-Sized Products comprise an air circulation device positioned to force ambient air through the common heat exchanger. Tr. (Pokharna) at 484:6-16; CDX-7C.75; JX-172C.

***

For the foregoing reasons, MRI has proven by a preponderance of evidence that the Accused Samsung Large-Sized Products infringe claim 1.

**b. Non-Accused Products**

Samsung has sought an adjudication of non-infringement as to claim 1 of the ’740 patent as to the Accused Samsung Mid-Sized-Sized Products (which are not accused products as to this patent). *See* RIB at 57. As discussed *supra*, the *Oligosaccharides* factors favor adjudication of these products. *See* Order No. 21 at 9-11, 21-22.[61]

MRI’s initial post-hearing brief contains no infringement arguments regarding the Accused Samsung Mid-Sized Products with respect to claim 1. According, any such arguments have been waived and MRI has failed to meet its burden of proof. *Human Milk Oligosaccharides*, Comm’n Op., 2020 WL 3073788, at *13 (June 8, 2020) (burden of establishing infringement lay with complainant with respect to non-accused, adjudicated product); Ground Rule 13.1. Samsung is therefore entitled to a finding of non-infringement of claim 1 for the Accused Samsung Mid-Sized Products.

[61] The Non-Accused OM Products were adjudicated as non-infringing, as to claims 1 and 5 of the ‘740 patent, in Order No. 21.

### 2. Claim 5

#### a. Accused Samsung Large-Sized Products

(i) *"The electronic display of claim 1, further comprising: a front display surface spaced apart from the front portion of the electronic image assembly; and a front channel defined by the space between the front display surface and the front portion of the electronic image assembly, the front channel forming part of the closed loop gas circulation path."*

There is no dispute that the Accused Samsung Large-Sized Products, to the extent they meet the requirements of claim 1, include the further limitation required by claim 5. *See* CIB at 97-98; RIB at 67 (contesting infringement of claim 5 only on the basis that it depends from claim 1). Dr. Pokharna testified that the Accused Samsung Large-Sized Products comprise these claim elements. Tr. (Pokharna) at 500:17-501:9; CDX-7C.102; JX-240C.

Accordingly, MRI has proven by a preponderance of evidence that the Accused Samsung Large-Sized Products infringe claim 5 of the '740 patent.

#### b. Non-Accused Products

Samsung has sought an adjudication of non-infringement as to claim 5 of the '740 patent as to the Accused Samsung Mid-Sized-Sized Products (which are not accused products as to this patent). *See* RIB at 57. As discussed *supra*, the *Oligosaccharides* factors favor adjudication of these products. *See* Order No. 21 at 9-11, 21-22.

MRI's initial post-hearing brief contains no infringement arguments regarding the Accused Samsung Mid-Sized Products with respect to claim 5. According, any such arguments have been waived and MRI has failed to meet its burden of proof. *Human Milk Oligosaccharides*, Comm'n Op., 2020 WL 3073788, at *13 (June 8, 2020) (burden of establishing infringement lay with complainant with respect to non-accused, adjudicated

product); Ground Rule 13.1. Samsung is therefore entitled to a finding of non-infringement of claim 5 for the Accused Samsung Mid-Sized Products.

### E. The ’142 Patent

MRI alleges infringement of claims 6 and 10 of the ’142 patent by the Accused Samsung Large-Sized Products. For the reasons set forth below (and in connection with the ‘740 patent), MRI has proven by a preponderance of evidence that the Accused Samsung Large-Sized Products infringe claims 6 and 10 of the ’142 patent.

#### 1. Claim 6

##### a. Accused Samsung Large-Sized Products

(i) *Claim element [6pre]: A cooling system for an electronic image assembly, the cooling system comprising:*

There is no dispute that the Accused Samsung Large-Sized Products have a cooling system for an electronic image assembly. CIB at 99; RIB at 67-68 (not disputing this claim element). Dr. Pokharna testified, based on his review of the evidence, that the Accused Samsung Large-Sized Products satisfy this claim element. Tr. (Pokharna) at 506:2-6. [62]

(ii) *Claim element [6a]: a housing for the electronic image assembly;*

There is no dispute that the Accused Samsung Large-Sized Products have a housing for the electronic image assembly. CIB at 99; RIB at 67-68 (not disputing this claim element). Dr. Pokharna testified, based on his review of the evidence, that the Accused Samsung Large-Sized Products satisfy this claim element. Tr. (Pokharna) at 506:9-16; CDX-7C.118; JX-240C.

(iii) *Claim element [6b]: a transparent cover panel forming a front portion of the housing, the transparent cover panel located*

[62] In addition, no party has argued that the preamble is limiting. *See generally* Updated Joint Claim Construction Statement (EDIS Doc. ID 792078).

*forward of, and at least some distance from, the electronic image assembly;*

There is no dispute that the Accused Samsung Large-Sized Products have a transparent cover panel forming a front portion of the housing, the transparent cover panel located forward of, and at least some distance from, the electronic image assembly. CIB at 100; RIB at 67-68 (not disputing this claim element). Dr. Pokharna testified, based on his review of the evidence, that the Accused Samsung Large-Sized Products satisfy this claim element. Tr. (Pokharna) at 506:13-16; CDX-7C.118; JX-240C.

(iv) *Claim element [6c]: an open loop airflow pathway passing through the housing behind the electronic image assembly;*

There is no dispute that the Accused Samsung Large-Sized Products have a cooling system for an electronic image assembly comprising an open loop airflow pathway passing through the housing behind the electronic image assembly. CIB at 100-101; RIB at 67-68 (not disputing this claim element). Dr. Pokharna testified, based on his review of the evidence, that the Accused Samsung Large-Sized Products satisfy this claim element. Tr. (Pokharna) at 506:7-22; CDX-7C.118; JX-240C; discussion *supra* regarding '740 patent.

(v) *Claim element [6d]: a closed loop gas circulation pathway contained within the housing, wherein a portion of said closed loop gas circulation pathway passes between said transparent cover panel and said electronic image assembly;*

The parties dispute this claim element for the same reasons they dispute claim element 1[c] of the '740 patent. CIB at 98-99; CRB at 51; RIB at 68; RRB at 40. For the same reasons that claim element 1[c] of the '740 patent is satisfied by the Accused Samsung Large-Sized Products, the evidence shows by a preponderance that this claim element is satisfied.

(vi) *Claim element [6e]: an inlet located at a first portion of said housing for ingesting ambient air into said open loop airflow pathway;*

There is no dispute that the Accused Samsung Large-Sized Products have a cooling system for an electronic image assembly comprising an inlet located at a first portion of said housing for ingesting ambient air into the asserted open loop airflow pathway. CIB at 101-102; RIB at 67-68 (not disputing this claim element). Dr. Pokharna testified, based on his review of the evidence, that the Accused Samsung Large-Sized Products satisfy this claim element. Tr. (Pokharna) at 506:7-22; CDX-7C.118; JX-240C.

(vii) *Claim element [6f]: an exhaust located at a second portion of said housing for exhausting said ambient air from said open loop airflow pathway;*

There is no dispute that the Accused Samsung Large-Sized Products have a cooling system for an electronic image assembly comprising an exhaust located at a second portion of said housing for exhausting said ambient air from the asserted open loop airflow pathway. CIB at 102-103; RIB at 67-68 (not disputing this claim element). Dr. Pokharna testified, based on his review of the evidence, that the Accused Samsung Large-Sized Products satisfy this claim element. Tr. (Pokharna) at 506:7-22; CDX-7C.118; JX-240C.

(viii) *Claim element [6g]: an air circulation device positioned along said open loop airflow pathway between said inlet and said exhaust, wherein said air circulation device is configured to force said ambient air through the open loop airflow pathway when activated;*

There is no dispute that the Accused Samsung Large-Sized Products have a cooling system for an electronic image assembly comprising an air circulation device (a fan) positioned along said open loop airflow pathway between said inlet and said exhaust, wherein said air circulation device is configured to force said ambient air through the open loop airflow pathway

when activated. CIB at 103; RIB at 67-68 (not disputing this claim element). Dr. Pokharna testified, based on his review of the evidence, that the Accused Samsung Large-Sized Products satisfy this claim element. Tr. (Pokharna) at 508:3-21; CDX-7C.127; JX-172C.6.

(ix) *Claim element [6h]: a gas circulation device positioned along said closed loop gas circulation pathway to force circulating gas around the closed loop gas circulation pathway when activated;*

There is no dispute that the Accused Samsung Large-Sized Products have a cooling system for an electronic image assembly comprising a gas circulation device (a fan) positioned along said closed loop gas circulation pathway to force circulating gas around the closed loop gas circulation pathway when activated. CIB at 103; RIB at 67-68 (not disputing this claim element). Dr. Pokharna testified, based on his review of the evidence, that the Accused Samsung Large-Sized Products satisfy this claim element. Tr. (Pokharna) at 508:3-21; CDX-7C.127; JX-172C.6.

(x) *Claim element [6i]: a heat exchanger located rearward of the electronic image assembly, wherein a first portion of said heat exchanger forms part of said open loop airflow pathway, and wherein a second portion of said heat exchanger forms part of said closed loop gas circulation pathway; and*

There is no dispute that the Accused Samsung Large-Sized Products have a heat exchanger located rearward of the electronic image assembly, wherein a first portion of said heat exchanger forms part of said open loop airflow pathway, and wherein a second portion of said heat exchanger forms part of the asserted closed loop gas circulation pathway. CIB at 103; RIB at 67-68 (not disputing this claim element). Dr. Pokharna testified, based on his review of the evidence, that the Accused Samsung Large-Sized Products satisfy this claim element. Tr. (Pokharna) at 508:3-21; CDX-7C.127; JX-172C.6.

(xi) *Claim element [6j]: one or more solar energy reduction layers located at said transparent cover panel, wherein each of said one*

> *or more solar energy reduction layers is configured to prevent a portion of solar energy entering said transparent cover panel from thermally interacting with the circulating gas at said portion of said closed loop gas circulation pathway passing between said transparent cover panel and said electronic image assembly or thermally interacting with said electronic image assembly.*

There is no dispute that the Accused Samsung Large-Sized Products meet this claim limitation to the extent the "closed loop" limitation is met. CIB at 104-107; RIB at 67-68 (not disputing this claim element). Dr. Pokharna testified, based on his review of the evidence, that the Accused Samsung Large-Sized Products satisfy this claim element. Tr. (Pokharna) at 503:2-505:4; CDX-7C.108-110; CX-1704C; JX-234C.22; JX-235C.25; JX-233C.22; CX-1908C (Lee Dep. Tr.) at 113:1-15.

**

For the foregoing reasons, MRI has proven by a preponderance of evidence that the Accused Samsung Large-Sized Products infringe claim 6 of the '142 patent.[63]

**2. Claim 10**

**a. Accused Samsung Large-Sized Products**

(xii) *"The cooling system of claim 6 wherein: at least one of said one or more solar energy reduction layers comprise a film having anti-reflection properties."*

There is no dispute that the Accused Samsung Large-Sized Products, to the extent they infringe claim 6, further meet the added limitation of claim 10. CIB at 107-108; RIB at 67-68 (not disputing this claim element). Dr. Pokharna testified, based on his review of the evidence, that the Accused Samsung Large-Sized Products satisfy this claim element. Tr. (Pokharna) at 508:25:509:3; CDX-7C.108-110; CX-1704C; JX-234C.22; JX-235C.25; JX-233C.22; CX-

[63] Summary determination of non-infringement by the Samsung Mid-Sized Products and the Non-Accused OM Products of claim 6 and 10 of the '142 patent was granted in Order No. 21.

1908C (Lee Dep. Tr.) at 113:1-15. Accordingly, MRI has proven by a preponderance of evidence that the Accused Samsung Large-Sized Products infringe claim 10.[64]

## VI. DOMESTIC INDUSTRY TECHNICAL PRONG

### A. The ’595 Patent

MRI contends that all of the Asserted DI Products practice claims 1 and 4 of the ’595 patent, and that certain Asserted DI Products practice claims 7 and 9 of the ’595 patent. CIB at 108-09. As discussed above, MRI and its expert, Mr. Credelle, broke the Asserted DI Products into five groups, each of which had a representative product. Tr. (Credelle) at 374:8-17; CDX-0006C at 222; CIB at 108. As Mr. Credelle explained, he worked with Mr. Brown from MRI to identify the representative product for each category. Tr. (Credelle) at 374:8-17. Mr. Brown testified that each of these groups had [redacted]. *See* discussion above. Respondents did not dispute that the asserted representative products for each group were representative of all other products in each group. *See generally* RIB; RRB. Based on this undisputed testimony, MRI has shown that its asserted representative products are representative of all other products in each group for purposes of the technical prong of domestic industry.

MRI asserts that the following Groups practice each of the asserted domestic industry claims:

- Claim 1: Groups 1-5
- Claim 4: Groups 1-5
- Claim 7: Groups 2-5
- Claim 9: Groups 2-4

[64] Summary determination of non-infringement by the OH46/55 Products of claim 10 of the ‘142 patent was granted in Order No. 21.

At the hearing and in their post-hearing briefs, Respondents do not dispute the technical prong is satisfied for the ’595 patent. *See generally* RIB; RRB (not disputing the technical prong is satisfied). For the reasons set forth below, MRI has shown that it has satisfied the technical prong for the ’595 patent for all the Asserted DI Products.

**1. Claim 1**

MRI contends that all the Asserted DI Products practice claim 1 of the ’595 patent. CIB at 109. Respondents do not dispute that the Asserted DI Products practice claim 1 of the ’595 patent. *See generally* RIB; RRB (not disputing the technical prong is satisfied). For the reasons set forth below, MRI has shown that the Asserted DI Products practice claim 1 of the ’595 patent.

**a. Claim element [1a]: A system for cooling an electronic display having a posterior display surface and contained within a housing, the system comprising**

There is no dispute that the Asserted DI Products contain systems for cooling an electronic display having a posterior display surface and contained within a housing. Mr. Credelle testified that the representative product for each Group contains electronic displays with a posterior display surface and a housing. Tr. (Credelle) at 376:3-377:21 (Group 1); CDX-0006C at 229 (Group 1); CX-381C (Group 1 CAD file); Tr. (Credelle) at 377:22-378:14 (Group 2); CDX-0006C at 230 (Group 2); JX-0102C (Group 2 CAD file); Tr. (Credelle) at 378:15-379:2 (Group 3); CDX-0006C at 231 (Group 3); JX-0101C (Group 3 CAD file); Tr. (Credelle) at 379:3-12 (Group 4); CDX-0006C at 232 (Group 4); CX-0420C (Group 4 CAD file); Tr. (Credelle) at 379:13-21 (Group 5); CDX-0006C at 233 (Group 5); JX-0099C (Group 5 CAD file). Accordingly, MRI has shown that the Asserted DI Products contain systems for cooling an electronic display having a posterior display surface and contained within a housing.

**b. Claim element [1b]: a constricted convection plate placed posterior to the posterior display surface**

There is no dispute that the Asserted DI Products comprise a constricted convection plate placed posterior to the posterior display surface. Mr. Credelle testified that the representative product for each Group contains a constricted convection plate placed posterior to the posterior display surface. Tr. (Credelle) at 376:3-377:21 (Group 1); CDX-0006C at 229 (Group 1); CX-0381C (Group 1 CAD file); Tr. (Credelle) at 377:22-378:14 (Group 2); CDX-0006C at 230 (Group 2); JX-0102C (Group 2 CAD file); Tr. (Credelle) at 378:15-379:2 (Group 3); CDX-0006C at 231 (Group 3); JX-0101C (Group 3 CAD file); Tr. (Credelle) at 379:3-12 (Group 4); CDX-0006C at 232 (Group 4); CX-0420C (Group 4 CAD file); Tr. (Credelle) at 379:13-21 (Group 5); CDX-0006C at 233 (Group 5); JX-0099C (Group 5 CAD file). Accordingly, MRI has shown that the Asserted DI Products comprise a constricted convection plate placed posterior to the posterior display surface.

**c. Claim elements [1c] and [1d]: [1c] two side panels placed adjacent to the constricted convection plate and the posterior display surface, [1d] defining a constricted convection channel having an entrance and an exit; and**

There is no dispute that the Asserted DI Products comprise two side panels placed adjacent to the constricted convection plate and the posterior display surface, defining a constricted convection channel having an entrance and an exit. Mr. Credelle testified that the representative product for each Group contains two side panels placed adjacent to the constricted convection plate and the posterior display surface, defining a constricted convection channel having an entrance and an exit. Tr. (Credelle) at 376:3-377:21 (Group 1); CDX-0006C at 229 (Group 1); CX-0381C (Group 1 CAD file); Tr. (Credelle) at 377:22-378:14 (Group 2); CDX-0006C at 230 (Group 2); JX-0102C (Group 2 CAD file); Tr. (Credelle) at 378:15-379:2 (Group

3); CDX-0006C at 231 (Group 3); JX-0101C (Group 3 CAD file); Tr. (Credelle) at 379:3-12 (Group 4); CDX-0006C at 232 (Group 4); CX-0420C (Group 4 CAD file); Tr. (Credelle) at 379:13-21 (Group 5); CDX-0006C at 233 (Group 5); JX-0099C (Group 5 CAD file). Accordingly, MRI has shown that the Asserted DI Products comprise two side panels placed adjacent to the constricted convection plate and the posterior display surface, defining a constricted convection channel having an entrance and an exit.

**d. Claim element [1d]: a fan placed to draw air from outside of the housing through the constricted convection channel.**

There is no dispute that the Asserted DI Products comprise a fan placed to draw air from outside of the housing through the constricted convection channel. Mr. Credelle testified that the representative product for each Group contains a fan placed to draw air from outside of the housing through the constricted convection channel. Tr. (Credelle) at 376:3-377:21 (Group 1); CDX-0006C at 229 (Group 1); CX-0381C (Group 1 CAD file); Tr. (Credelle) at 377:22-378:14 (Group 2); CDX-0006C at 230 (Group 2); JX-0102C (Group 2 CAD file); Tr. (Credelle) at 378:15-379:2 (Group 3); CDX-0006C at 231 (Group 3); JX-0101C (Group 3 CAD file); Tr. (Credelle) at 379:3-12 (Group 4); CDX-0006C at 232 (Group 4); CX-0420C (Group 4 CAD file); Tr. (Credelle) at 379:13-21 (Group 5); CDX-0006C at 233 (Group 5); JX-0099C (Group 5 CAD file). Accordingly, MRI has shown that the Asserted DI Products comprise a fan placed to draw air from outside of the housing through the constricted convection channel.

MRI has therefore shown that the Asserted DI products practice claim 1 of the ’595 patent.

**2. Claim 4**

MRI contends that all the Asserted DI Products practice claim 4 of the ’595 patent. CIB at 109. Respondents do not dispute that the Asserted DI Products practice claim 4 of the ’595

patent. *See generally* RIB; RRB (not disputing the technical prong is satisfied). For the reasons set forth below, MRI has shown that the Asserted DI Products practice claim 4 of the '595 patent.

**a. Claim element [4a]: A liquid crystal display (LCD) comprising:**

There is no dispute that the Asserted DI Products contain a liquid crystal display. Mr. Credelle testified that the Asserted DI Products contain a liquid crystal display. Tr. (Credelle) at 381:18-383:1; *see also* CDX-0006C at 239 (citing CX-0435C, CX-0327C). Mr. Brown also testified that all the Asserted DI Products contain an LCD cell. Tr. (Brown) at 244:9-11. Accordingly, MRI has shown that the Asserted DI Products contain a liquid crystal display.

**b. Claim element [4b]: a liquid crystal stack;**

There is no dispute that the Asserted DI Products comprise a liquid crystal stack. As Mr. Credelle explained, liquid crystal stack [redacted] Tr. (Credelle) at 353:20-354:4. Mr. Credelle testified that the Asserted DI Products contain a liquid crystal stack. Tr. (Credelle) at 381:18-383:1; *see also* CDX-0006C at 239 (citing CX-0435C, CX-0327C). Accordingly, MRI has shown that the Asserted DI Products comprise a liquid crystal stack.

**c. Claim element [4c]: a backlight assembly behind the liquid crystal stack and comprising:**

There is no dispute that the Asserted DI Products comprise a backlight assembly behind the liquid crystal stack. Mr. Credelle testified that the Asserted DI Products contain a backlight assembly behind the liquid crystal stack. Tr. (Credelle) at 381:18-383:1; *see also* CDX-0006C at 239 (citing CX-0435C, CX-0327C). Mr. Brown also testified that the backlight is behind the liquid crystal display. Tr. (Brown) at 242:6-9. Accordingly, MRI has shown that the Asserted DI Products comprise a backlight assembly behind the liquid crystal stack.

**d. Claim element [4d]: a metal core printed circuit board (PCB) having front and back sides;**

There is no dispute that the backlight assembly of the Asserted DI Products comprise a metal core printed circuit board (PCB) having front and back sides. Mr. Credelle testified that the circuit board in the Asserted DI Products is a metal core [redacted]. Tr. (Credelle) at 381:18-383:1; *see also* CDX-0006C at 239 (citing CX-0435C, CX-0327C); CX-0435C. Accordingly, MRI has shown that the backlight assembly of the Asserted DI Products comprise a metal core printed circuit board (PCB) having front and back sides.

**e. Claim element 4[e]: a plurality of LEDs mounted on the front side of the PCB;**

There is no dispute that the backlight assembly of the Asserted DI Products comprise a plurality of LEDs mounted on the front side of the PCB. Mr. Credelle testified that LEDs in in the Asserted DI Products are mounted on the front side of the PCB. Tr. (Credelle) at 381:18-383:1; *see also* CDX-0006C at 239 (citing CX-0435C, CX-0327C); CX-0435C. Accordingly, MRI has shown that the backlight assembly of the Asserted DI Products comprise a plurality of LEDs mounted on the front side of the PCB.

**f. Claim element [4f]: a posterior surface on the rear side of the PCB;**

There is no dispute that the backlight assembly of the Asserted DI Products comprise a posterior surface on the rear side of the PCB. Mr. Credelle and MRI pointed to the posterior display surface they identified for element [1a] of claim 1 of the ’595 patent as the posterior surface on the rear side of the PCB in the Asserted DI Products. Tr. (Credelle) at 383:6-10; CIB at 113. For the reasons discussion above MRI has shown that the backlight assembly of the Asserted DI Products comprise a posterior surface on the rear side of the PCB.

**g. Claim element [4g]: a constricted convection plate placed behind the posterior surface of the PCB, defining a constricted convection channel having an entrance and an exit; and**

There is no dispute that the Asserted DI Products comprise a constricted convection plate placed behind the posterior surface of the PCB, defining a constricted convection channel having an entrance and an exit. Element [4g] of claim 4 of the ’595 patent contains limitations contained in elements [1b] and [1c] of the ’595 patent: “a constricted convection plate placed posterior to the posterior display surface” from element [1b] and “a constricted convection channel having an entrance and an exit” from element [1c]. For the reasons discussion above MRI has shown that the Asserted DI Products comprise a constricted convection plate placed behind the posterior surface of the PCB, defining a constricted convection channel having an entrance and an exit.

**h. Claim element [4h]: a fan positioned to draw air through the constricted convection channel.**

There is no dispute that the Asserted DI Products comprise a fan positioned to draw air through the constricted convection channel. Element [4h] of claim 4 is similar to element [1d] of claim 1 of the ’595 patent, which requires “a fan placed to draw air from outside of the housing through the constricted convection channel.” The evidence shows that the same fan identified for element [1d] of claim 1 of the ’595 patent is positioned to draw air through the constricted convection channel. *See* evidence discussion above. Accordingly, MRI has shown that the Asserted DI Products comprise a fan positioned to draw air through the constricted convection channel.

MRI has therefore shown that the Asserted DI products practice claim 4 of the ’595 patent.

### 3. Claim 7

#### a. Claim element 7: The LCD from claim 4 wherein: the fan is placed near the exit of the constricted convection channel.

MRI contends that the Group 2-5 products practice claim 7 of the ’595 patent. CIB at 109. Respondents do not dispute that the Group 2-5 products practice claim 7 of the ’595 patent. *See generally* RIB; RRB (not disputing the technical prong is satisfied). As discussed above, the Group 2-5 products practice claim 4 of the ’595 patent, from which claim 7 depends. In addition, there is no dispute that in the Group 2-5 products, the fan is placed near the exit of the constricted convection channel. Mr. Credelle testified that in the Group 2-5 products, the fan is placed near the bottom of the unit, which is the exit of the claimed constriction channel. Tr. (Credelle) at 383:15-384:11. Accordingly, MRI has shown that the Group 2-5 products practice claim 7 of the ’595 patent.

### 4. Claim 9

MRI contends that the Group 2-4 products practice claim 9 of the ’595 patent. CIB at 109. Respondents do not dispute that the Group 2-4 products practice claim 9 of the ’595 patent. *See generally* RIB; RRB (not disputing the technical prong is satisfied). For the reasons set forth below, MRI has shown that the Group 2-4 products practice claim 9 of the ’595 patent.

#### a. Claim element [9pre]: A system for cooling an electronic display comprising:

This limitation is identical to portions of limitation [1a] of claim 1 of the ’595 patent. For the reasons discussion above, MRI has shown that the Group 2-4 products contain a system for cooling an electronic display.

**b. Claim element [9a]: an electronic display comprising a front display surface and a posterior surface;**

There is no dispute that the Asserted DI Products comprise an electronic display comprising a front display surface and a posterior surface. Limitation [1a] of claim 1 of the ’595 patent requires an electronic display comprising a posterior surface, and as discussion above, MRI has shown that the Group 2-4 Products comprise an electronic display comprising a posterior surface. Mr. Credelle also testified that the electronic display comprises a front display surface. Tr. (Credelle) at 380:7-18 (testifying about limitation [9b] of claim 9 of the ’355 patent); *see also* JX-0102C (Group 2 CAD drawing); JX-0101C (Group 3 CAD drawing); CX-0420C (Group 4 CAD drawing). *See* claim element [1a]. Accordingly, MRI has shown that the Group 2-4 products contain a system for cooling an electronic display.

**c. Claim element [9b]: a constricted convection plate and a pair of sidewalls behind the posterior surface of the display, defining a constricted convection channel having an entrance and exit;**

There is no dispute that the Group 2-4 Products comprise a constricted convection plate and a pair of sidewalls behind the posterior surface of the display, defining a constricted convection channel having an entrance and exit. Each of the limitations of element [9c] of the ’595 patent are contained in claim 1 of the ’595 patent. A constricted convection plate behind the posterior surface of the display is contained in limitation [1b], and MRI has shown that the Group 2-4 products comprise a constricted convection plate behind the posterior surface. *See* discussion above. Mr. Credelle testified that the pair of sidewalls behind the posterior surface of the display is equivalent to the side panels in limitation [1c]. Tr. (Credelle) at 387:22-25. For the same reasons, MRI has shown that the Group 2-4 products comprise a pair of sidewalls behind the posterior surface of the display. *See* discussion above. And a constricted convection channel having an entrance and exit is identical to limitation [1d], and MRI has

shown that the constricted convection channel has an entrance and exit. *See* discussion above. Accordingly, MRI has shown that the Group 2-4 products comprise a constricted convection plate and a pair of sidewalls behind the posterior surface of the display, defining a constricted convection channel having an entrance and exit.

**d. Claim element [9c]: a gaseous closed loop traveling across the front display surface, behind the constricted convection plate, and returning to the front display surface.**

There is no dispute that the Group 2-4 Products comprise a gaseous closed loop traveling across the front display surface, behind the constricted convection plate, and returning to the front display surface. Mr. Credelle testified that the Group 2-4 Products have a closed loop which travels across the front display surface, behind the constricted convection plate, and then returning to the front display surface. Tr. (Credelle) at 388:5-21; CDX-0006C at 248; JX-0102C (Group 2 CAD drawing):

[redacted]

Mr. Credelle also relied on Mr. Brown's testimony about the closed loop. *Id.*; Tr. (Brown) at 243:11-244:6, 244:16-245:7. Accordingly, MRI has shown that the Group 2-4 Products

comprise a gaseous closed loop traveling across the front display surface, behind the constricted convection plate, and returning to the front display surface.

**e. Claim element [9d]: a means for propelling gas around the closed loop;**

There is no dispute that the Group 2-4 Products comprise a means for propelling gas around the closed loop. Mr. Credelle testified that the means for propelling gas around the closed loop in the Group 2-4 Products are a set of fans. Tr. (Credelle) at 388:5-21 (Group 2); CDX-0006C at 248 (Group 2); JX-0102C (Group 2 CAD drawing); Tr. (Credelle) at 388:25-389:14 (Group 3); CDX-0006C at 249 (Group 3); JX-0101C (Group 3 CAD drawing); Tr. (Credelle) at 389:20-390:2 (Group 4); CDX-0006C at 250 (Group 4); CX-0420C (Group 4 CAD drawing).; *see also* Tr. (Brown) at 243:11-244:6, 244:16-245:7 (discussing the closed loop fans). These fans satisfy the parties' agreed construction's structure of "a refrigeration unit or a plurality of fans" or equivalents thereof because they are the same structure as the fans in the parties' agreed construction. Updated Joint Claim Construction Statement (EDIS Doc. ID 792078) at 2-3; *see Kemco Sales*, 208 F.3d at 1364. Accordingly, MRI has shown that the Group 2-4 Products comprise a means for propelling gas around the closed loop.

**f. Claim element [9e]: a means for cooling the gas in the closed loop;**

There is no dispute that the Group 2-4 Products comprise a means for cooling the gas in the closed loop. Mr. Credelle testified that the Group 2-4 Products contain what he calls a [redacted] Tr. (Credelle) at 388:5-21 (Group 2); CDX-0006C at 248 (Group 2); JX-0102C (Group 2 CAD drawing); Tr. (Credelle) at 388:25-389:14 (Group 3); CDX-0006C at 249 (Group 3); JX-0101C (Group 3 CAD drawing); Tr. (Credelle) at 389:20-390:2 (Group 4); CDX-0006C at 250 (Group 4); CX-0420C (Group 4 CAD drawing). Mr. Credelle testified that the [redacted]

[redacted] satisfies the parties' agreed construction because [redacted] is the same structure as the one identified in the agreed construction. Updated Joint Claim Construction Statement (EDIS Doc. ID 792078) at 2-3; *see Kemco Sales*, 208 F.3d at 1364. Accordingly, the Group 2-4 Products comprise a means for cooling the gas in the closed loop.

**g. Claim element [9f]: a means for forcing air through the constricted convection channel.**

There is no dispute that the Group 2-4 Products comprise a means for forcing air through the constricted convection channel. As explained regarding limitations [1d] and [4h], the Group 2-4 products contain fans placed to draw air through the constricted convection channel. *See* discussion above; *see also* Tr. (Credelle) at 387:16-21 (referring to prior limitations in other claims of the '595 and '322 patents). These fans satisfy the parties' agreed construction because fans are the same structure as the one identified in the disclosure. *Kemco Sales*, 208 F.3d at 1364. Updated Joint Claim Construction Statement (EDIS Doc. ID 792078) at 2. Accordingly, the Group 2-4 Products comprise a means for forcing air through the constricted convection channel.

Accordingly, MRI has shown that the Group 2-4 products practice claim 9 of the '595 patent.

**B. The '322 Patent**

MRI contends that all of the Asserted DI Products practice claims 3, 4, 5, and 9 of the '322 patent. CIB at 109. Respondents do not dispute the technical prong is satisfied for the '322 patent. *See generally* RIB; RRB (not disputing that the technical prong is satisfied). For purposes of proving the technical prong, MRI relies on the same representative products for each of the five Groups of products that it used for the '595 patent. As discussed above, MRI has proven that the representative products are representative for each Group of the Asserted DI

Products. For the reasons set forth below, MRI has shown that it has satisfied the technical prong for the ’322 patent for all of the Asserted DI Products.

**1. Claim 3**

MRI contends that the Asserted DI Products practice claim 3 of the ’322 patent. CIB at 109. Respondents do not dispute that the Asserted DI Products practice claim 3 of the ’322 patent. *See generally* RIB; RRB (not disputing that the technical prong is satisfied). For the reasons set forth below, MRI has shown that the Asserted DI Products practice claim 3 of the ’322 patent for all of the Asserted DI Products.

**a. Claim element [1a]: A system for cooling an electronic display having a posterior display surface and contained within a housing, the system comprising:**

Element [1a] of claim 1 is identical to element [1a] of claim 4 of the ’595 patent. Tr. (Credelle) at 386:24-387:8. For the same reasons discussion above, MRI has shown that the Asserted DI Products contain a system for cooling an electronic display having a posterior display surface and contained within a housing.

**b. Claim element [1b]: a constricted convection plate placed posterior to the posterior display surface covering the majority of the posterior display surface;**

Element [1b] of claim 1 is identical to element [9c] of claim 9 of the ’322 patent. Tr. (Credelle) at 386:24-387:8. Mr. Credelle testified regarding element [9c] of claim 9 of the ’322 patent that the constricted convection plate is placed posterior to the posterior display surface and that it covers the majority of the posterior display surface. Tr. (Credelle) at 380:7-18; *see also* JX-0100C (Group 1 CAD drawing); JX-0102C (Group 2 CAD drawing); JX-0101C (Group 3 CAD drawing); CX-0420C (Group 4 CAD drawing); JX-0099C (Group 5 CAD drawing); *see* discussion below. Accordingly, MRI has shown that the Asserted DI Products comprise a

constricted convection plate placed posterior to the posterior display surface covering the majority of the posterior display surface.

**c. Claim element [1c]: at least one bracket which connects the posterior display surface with the constricted convection plate; and**

Element [1c] of claim 1 is identical to the additional limitation of claim 5 of the ’322 patent. Tr. (Credelle) at 386:24-387:8. Mr. Credelle testified regarding claim 5 of the ’322 patent that the side panels identified for limitation [1c] of claim 1 of the ’595 patent are a bracket that connects the posterior display surface with the constricted convection plate. Tr. (Credelle) at 386:2-18; *see also* discussion above (element [1c] of the ’595 patent), discussion below (claim 5 of the ’322 patent). Accordingly, MRI has shown that the Asserted DI Products comprise a constricted convection plate placed posterior to the posterior display surface covering the majority of the posterior display surface.

**d. Claim element [1d]: a fan placed to draw ambient air between the constricted convection plate and the rear posterior.**

Element [1d] of claim 3 is similar to limitation [4h] of claim 4 of the ’322 patent. Tr. (Credelle) at 386:24-387:8. Mr. Credelle testified regarding limitation [4h] of claim 4 of the ’322 patent that the fans in the Asserted DI Products are positioned to draw air between the constricted convection plate and the posterior surface. Tr. (Credelle) at 384:17-385:2, 385:7-10; *see also* discussion above (similar limitation in claim 4 of the ’595 patent), discussion below (limitation [4h] of the ’322 patent). Accordingly, MRI has shown that the Asserted DI Products comprise a fan placed to draw ambient air between the constricted convection plate and the rear posterior.

**e. Claim element [3]: The cooling system from claim 1 wherein: the constricted convection plate is substantially parallel to the posterior display surface.**

The additional limitation of claim 3 is identical to a portion of limitation [4g] of claim 4 of the ’322 patent. Tr. (Credelle) at 386:24-387:8. Mr. Credelle testified regarding limitation [4g] of claim 4 of the ’322 patent that the constricted convection plate of the Asserted DI Products is substantially parallel with the posterior display surface. Tr. (Credelle) at 384:17-385:2, 385:11-19; *see also* discussion below. Accordingly, MRI has shown that the Asserted DI Products comprise a fan placed to draw ambient air between the constricted convection plate and the rear posterior.

**2. Claim 4**

MRI contends that the Asserted DI Products practice claim 4 of the ’322 patent. CIB at 117. Respondents do not dispute that the Asserted DI Products practice claim 4 of the ’322 patent. *See generally* RIB; RRB (not disputing that the technical prong is satisfied). For the reasons set forth below, MRI has shown that the Asserted DI Products practice claim 4 of the ’322 patent.

**a. Claim element [4a]: A liquid crystal display (LCD) comprising:”**

This limitation is identical to limitation [4a] of claim 4 of the ’595 patent. *See* Tr. (Credelle) at 384:14-385:2; CDX-0006C at 244 (comparing claim 4 of the ’322 patent with claim 4 of the ’595 patent). For the reasons discussed above, MRI has shown that the Asserted DI Products contain a liquid crystal display.

**b. Claim element [4b]: a liquid crystal stack;**

This limitation is identical to limitation [4b] of claim 4 of the ’595 patent. *See* Tr. (Credelle) at 384:14-385:2; CDX-0006C at 244 (comparing claim 4 of the ’322 patent with claim

4 of the ’595 patent). For the reasons discussed above, MRI has shown that the Asserted DI Products comprise a liquid crystal stack.

**c. Claim element [4c]: a backlight assembly behind the liquid crystal stack and comprising:**

This limitation is identical to limitation [4c] of claim 4 of the ’595 patent. *See* Tr. (Credelle) at 384:14-385:2; CDX-0006C at 244 (comparing claim 4 of the ’322 patent with claim 4 of the ’595 patent). For the reasons discussed above, MRI has shown that the Asserted DI Products comprise a backlight assembly behind the liquid crystal stack.

**d. Claim element [4d]: a printed circuit board (PCB) having front and back sides;**

This limitation is similar to limitation [4d] of claim 4 of the ’595 patent. *See* Tr. (Credelle) at 384:14-385:2; CDX-0006C at 244 (comparing claim 4 of the ’322 patent with claim 4 of the ’595 patent). The key difference is that unlike limitation [4d] of claim 4 of the ’595 patent, limitation [4d] of the ’322 patent does not require a “metal core” PCB. For the reasons discussed above, MRI has shown that the backlight assembly of the Asserted DI Products comprises a printed circuit board (PCB) having front and back sides.

**e. Claim element [4e]: a plurality of LEDs mounted on the front side of the PCB;**

This limitation is identical to limitation [4e] of claim 4 of the ’595 patent. *See* Tr. (Credelle) at 384:14-385:2; CDX-0006C at 244 (comparing claim 4 of the ’322 patent with claim 4 of the ’595 patent). For the reasons discussed above, MRI has shown that the backlight assembly of the Asserted DI Products comprises a plurality of LEDs mounted on the front side of the PCB.

**f. Claim element [4f]: a posterior surface on the rear side of the PCB;**

This limitation is identical to limitation [4f] of claim 4 of the ’595 patent. *See* Tr. (Credelle) at 384:14-385:2; CDX-0006C at 244 (comparing claim 4 of the ’322 patent with claim 4 of the ’595 patent). For the reasons discussed above, MRI has shown that the backlight assembly of the Asserted DI Products comprises a posterior surface on the rear side of the PCB.

**g. Claim element [4g]: a constricted convection plate placed behind and substantially parallel with the posterior surface of the PCB; and**

This limitation is similar to limitation [4g] of claim 4 of the ’595 patent. This limitation requires that the constricted convection plate be “substantially parallel with” the posterior surface, and does not require that the constricted convection plate define a constricted convection channel. *See* Tr. (Credelle) at 384:14-385:2; CDX-0006C at 244 (comparing claim 4 of the ’322 patent with claim 4 of the ’595 patent). As explained above the Asserted DI Products comprise a constricted convection plate. Mr. Credelle testified that the constricted convection plate of the Asserted DI Products is substantially parallel with the posterior surface of the PCB. Tr. (Credelle) at 384:17-385:2, 385:11-19. Accordingly, MRI has shown that the Asserted DI Products comprise a constricted convection plate placed behind and substantially parallel with the posterior surface of the PCB.

**h. Claim element [4h]: a fan positioned to draw air between the constricted convection plate and the posterior surface.**

There is no dispute that the Asserted DI Products comprise a fan positioned to draw air between the constricted convection plate and the posterior surface. Mr. Credelle testified that the fans in the Asserted DI Products are positioned to draw air between the constricted convection plate and the posterior surface. Tr. (Credelle) at 384:17-385:2, 385:7-10; *accord* discussion

above (similar limitation in claim 4 of the ’595 patent). Accordingly, MRI has shown that the Asserted DI Products comprise a fan positioned to draw air between the constricted convection plate and the posterior surface.

MRI has therefore shown that the Asserted DI products practice claim 4 of the ’322 patent.

### 3. Claim 5

#### a. Claim element 5: The LCD from claim 4 further comprising: at least one bracket which connects the posterior surface with the constricted convection plate.

MRI contends that the Asserted DI Products practice claim 5 of the ’322 patent. CIB at 109. Respondents do not dispute that the Asserted DI Products practice claim 5 of the ’322 patent. *See generally* RIB; RRB (not disputing that the technical prong is satisfied). As discussed above, the Asserted DI Products practice claim 4 of the ’322 patent, from which claim 5 depends. Respondents do not dispute that the Asserted DI Products comprise at least one bracket which connects the posterior surface with the constricted convection plate. Mr. Credelle testified that the side panels identified for limitation [1c] of claim 1 of the ’595 patent are a bracket that connects the posterior surface of the PCB with the constricted convection plate. Tr. (Credelle) at 386:2-18; *see also* discussion above. Accordingly, MRI has shown that the Asserted DI Products practice claim 5 of the ’322 patent.

### 4. Claim 9

MRI contends that the Asserted DI Products practice claim 9 of the ’322 patent. CIB at 109. Respondents do not contest that the Asserted DI Products practice claim 9 of the ’322 patent. For the reasons set forth below, MRI has shown that the Asserted DI Products practice claim 9 of the ’322 patent.

**a. Claim element [9a]: A system for cooling an electronic display comprising:**

Element [9a] of the ’322 patent is similar to element [1a] of the ’595 patent. For the reasons discussed above, MRI has shown that the Asserted DI Products contain a system for cooling an electronic display.

**b. Claim element [9b]: an electronic display comprising a front display surface and a posterior surface where no electronics are mounted to the posterior surface of the electronic display;**

Element [9b] of the ’322 patent is similar to certain aspects of element [1a] of the ’595 patent. As discussed above, MRI has shown that the Asserted DI Products comprise an electronic display having a posterior surface. Mr. Credelle also testified that the Asserted DI products have a front display surface, and that the back (posterior) surface has no electronics mounted to it. Tr. (Credelle) at 380:7-18; *see also* JX-0100C (Group 1 CAD drawing); JX-0102C (Group 2 CAD drawing); JX-0101C (Group 3 CAD drawing); CX-0420C (Group 4 CAD drawing); JX-0099C (Group 5 CAD drawing). Accordingly, MRI has shown that the Asserted DI Products comprise an electronic display comprising a front display surface and a posterior surface where no electronics are mounted to the posterior surface of the electronic display.

**c. Claim element [9c]: a constricted convection plate behind the posterior surface of the display covering a majority of the posterior display surface; and**

Element [9c] of the ’322 patent is similar to element [1b] of the ’595 patent. As discussed above, MRI has shown that the Asserted DI Products comprise a constricted convection plate behind the posterior surface of the display. Mr. Credelle further testified that the constricted convection plates cover a majority of the posterior display surface. Tr. (Credelle) at 380:7-18; *see also* JX-0100C (Group 1 CAD drawing); JX-0102C (Group 2 CAD drawing); JX-0101C (Group 3 CAD drawing); CX-0420C (Group 4 CAD drawing); JX-0099C (Group 5

CAD drawing). Accordingly, MRI has shown that the Asserted DI Products comprise a constricted convection plate behind the posterior surface of the display covering a majority of the posterior display surface.

**d. Claim element [9d]: a means for forcing air between the constricted convection plate and the posterior surface of the electronic display.**

There is no dispute that the Asserted DI Products comprise a means for forcing air between the constricted convection plate and the posterior surface of the electronic display. Mr. Credelle testified that the claimed means for forcing air between the constricted convection plate and the posterior surface of the electronic display are the fans he identified as meeting element [1d] of claim 1 of the ’595 patent. Tr. (Credelle) at 380:19-22; *see also* § discussion above. These fans satisfy the agreed construction of this limitation because they are the same as the disclosed structure. *Kemco Sales*, 208 F.3d at 1364. Accordingly, MRI has shown that the Asserted DI Products comprise a fan placed to draw air from outside of the housing through the constricted convection channel. *See* claim element [9f] of the ’595 patent.

**C. The ’287 Patent**

MRI contends that all the Asserted DI Products practice claim 12 of the ’287 patent. Tr. (Pokharna) at 510:3-7; CDX-0007C at 134. Respondents do not dispute any limitations of claim 12 of the ’287 patent. The evidence shows that the technical prong of the domestic industry requirement has been satisfied for claim 12 of the ’287 patent.

**1. Claim element [12pre]: An electronic display assembly comprising:**

There is no dispute that the Asserted DI Products are electronic display assemblies and therefore satisfy this claim element. CIB at 118. CAD files for the Asserted DI Products show an LCD cell and backlight assembly located within an external housing. CX-0383C; JX-0100C;

CX-0420C; JX-0102C; JX-0101C; Tr. (Pokharna) at 510:21-513:12. Accordingly, MRI has shown that the Asserted DI Products are electronic display assemblies.

**2. Claim element [12a]: a housing;**

There is no dispute that the Asserted DI Products comprise a housing and therefore satisfy this claim element. CIB at 119. CAD files for the Asserted DI Products show an LCD [redacted], *i.e.* an external housing. CX-0383C; JX-0100C; CX-0420C; JX-0102C; JX-0101C; Tr. (Pokharna) at 510:21-513:12. Accordingly, MRI has shown that the Asserted DI Products comprise a housing.

**3. Claim element [12b]: a liquid crystal display (LCD) positioned within the housing and having a backlight;**

There is no dispute that the Asserted DI Products comprise a liquid crystal display (LCD) positioned within the housing and having a backlight and therefore satisfy this claim element. CIB at 119. Mr. Mike Brown, MRI's VP of Mechanical Engineering, testified that the Asserted DI Products have an LCD and a backlight. Tr. (Brown) at 244:9-15; *see also* Tr. (Pokharna) at 513:17-23. Accordingly, MRI has shown that the Asserted DI Products comprise a liquid crystal display (LCD) positioned within the housing and having a backlight.

**4. Claim element [12c]: wherein the electronic display is coolable by a combination of a closed loop of isolated gas which circulates within the housing and an open loop of ambient air which passes through the housing and along the backlight.**

There is no dispute that in the Asserted DI Products the electronic display is coolable by a combination of a closed loop of isolated gas which circulates within the housing and an open loop of ambient air which passes through the housing and along the backlight, and therefore the Asserted DI Products satisfy this claim element. CIB at 119-120. CAD files for the Asserted DI Products show [redacted]

[redacted]. CX-0383C; JX-0100C; CX-0420C; JX-0102C; JX-0101C. Computational fluid dynamics simulations show the airflow through the open and closed loops. CX-1073C; CX-1075C; CX-1093C; CX-1095C; CX-1106C; Tr. (Pokharna) at 510:21-513:12. Mr. Brown testified that Samsung's internal testing of the products and the products' IP-66 rating show that the closed loop is sealed tight from dust and water. Tr. (Brown) at 236:21-238:3. Accordingly, MRI has shown that in the Asserted DI Products the electronic display is coolable by a combination of a closed loop of isolated gas which circulates within the housing and an open loop of ambient air which passes through the housing and along the backlight.

### D. The '740 Patent

MRI contends that the Group 2-4 DI products practice claims 1 and 5 of the '740 patent. CIB at 120; Tr. (Pokharna) at 510:8-12; Tr. (Brown) at 256:5-261:5; CDX-0007C at 133-134. Respondents do not dispute that the technical prong of the domestic industry requirement has been met for any limitations of claims 1 and 5 of the '740 patent. The evidence shows that the technical prong of the domestic industry requirement has been satisfied for claims 1 and 5 of the '740 patent.

#### 1. Claim 1

##### a. Claim element [1pre]: An electronic display comprising:

There is no dispute that the MRI 75/86, MRI 75/86 Double, and MRI Gen 16 products are electronic display assemblies and therefore satisfy this claim element. CIB at 120. The evidence shows that these products meet the preamble element, to the extent it is limiting. *See*

CX-0420C; JX-0102C; JX-0101C; Tr. (Pokharna) at 513:24-516:13. Accordingly, MRI has shown that this claim element is met. [65]

**b. Claim element [1a]: an electronic image assembly having a front portion and a rear portion;**

There is no dispute that the MRI 75/86, MRI 75/86 Double, and MRI Gen 16 products comprise an electronic image assembly having a front portion and a rear portion and therefore satisfy this claim element. CIB at 120-121. The evidence shows that these products meet this claim element. *See* CX-0420C; JX-0102C; JX-0101C; Tr. (Pokharna) at 513:24-516:13. Accordingly, MRI has shown that the MRI 75/86, MRI 75/86 Double, and MRI Gen 16 products satisfy this claim element.

**c. Claim element [1b]: an open loop ambient air flow path behind the rear portion of the electronic image assembly;**

There is no dispute that the MRI 75/86, MRI 75/86 Double, and MRI Gen 16 products comprise an open loop ambient air flow path and satisfy this claim element. CIB at 120-121. The evidence shows that these products meet this claim element. *See* CX-0420C; JX-0102C; JX-0101C; Tr. (Pokharna) at 513:24-516:13. Accordingly, MRI has shown that the MRI 75/86, MRI 75/86 Double, and MRI Gen 16 products satisfy this claim element.

**d. Claim element [1c]: a closed loop gas circulation path about the electronic image assembly;**

There is no dispute that the MRI 75/86, MRI 75/86 Double, and MRI Gen 16 products comprise a closed loop gas circulation path about the electronic image assembly and therefore satisfy this claim element. CIB at 121. The evidence shows that these products meet this claim element. *See* CX-0420C; JX-0102C; JX-0101C; Tr. (Pokharna) at 513:24-516:13. Accordingly,

[65] In addition, no party has argued that the preamble is limiting. *See generally* Updated Joint Claim Construction Statement (EDIS Doc. ID 792078).

MRI has shown that the MRI 75/86, MRI 75/86 Double, and MRI Gen 16 products satisfy this claim element.

**e. Claim element [1d]: a common heat exchanger located in the pathway of both the closed loop gas circulation path and the open loop ambient air flow path;**

There is no dispute that the MRI 75/86, MRI 75/86 Double, and MRI Gen 16 products comprise a common heat exchanger located in the pathway of both the closed loop gas circulation path and the open loop ambient air flow path. CIB at 121-122. The evidence shows that these products meet this claim element. *See* CX-0420C; CX-1093C; CX-1094C; CX-1095C; CX-1096C; CX-1106C; CX-1107C; JX-0102C; JX-0101C; Tr. (Pokharna) at 513:24-516:13. Accordingly, MRI has shown that the MRI 75/86, MRI 75/86 Double, and MRI Gen 16 products satisfy this claim element.

**f. Claim element [1e]: a gas circulation device positioned to force circulating gas through the common heat exchanger; and**

There is no dispute that the MRI 75/86, MRI 75/86 Double, and MRI Gen 16 products comprise a gas circulation device positioned to force circulating gas through the common heat exchanger. CIB at 122. The evidence shows that these products meet this claim element. *See* CX-1093C; CX-1095C; CX-1106C; Tr. (Pokharna) at 513:24-516:13. Accordingly, MRI has shown that the MRI 75/86, MRI 75/86 Double, and MRI Gen 16 products satisfy this claim element.

**g. Claim element [1f]: an air circulation device positioned to force ambient air through the common heat exchanger.**

There is no dispute that the MRI 75/86, MRI 75/86 Double, and MRI Gen 16 products comprise an air circulation device positioned to force ambient air through the common heat exchanger. CIB at 122. The evidence shows that these products meet this claim element. *See*

CX-1093C; CX-1095C; CX-1106C; Tr. (Pokharna) at 513:24-516:13. Accordingly, MRI has shown that the MRI 75/86, MRI 75/86 Double, and MRI Gen 16 products satisfy this claim element.

**2. Claim 5: The electronic display of claim 1, further comprising: a front display surface spaced apart from the front portion of the electronic image assembly; and a front channel defined by the space between the front display surface and the front portion of the electronic image assembly, the front channel forming part of the closed loop gas circulation path.**

There is no dispute that the MRI 75/86, MRI 75/86 Double, and MRI Gen 16 products comprise a front display surface spaced apart from the front portion of the electronic image assembly; and a front channel defined by the space between the front display surface and the front portion of the electronic image assembly, the front channel forming part of the closed loop gas circulation path. CIB at 122-123. The evidence shows that these products meet this claim element. *See* CX-0420C; CX-1093C; CX-1094C; CX-1095C; CX-1096C; CX-1106C; CX-1107C; JX-0102C; JX-0101C; Tr. (Pokharna) at 513:24-516:13. Accordingly, MRI has shown that the MRI 75/86, MRI 75/86 Double, and MRI Gen 16 products satisfy this claim element.

**E. The '142 Patent**

MRI contends that the Group 2-4 products practice claims 6 and 10 of the '142 patent. CIB at 123; Tr. (Pokharna) at 510:8-12; Tr. (Brown) at 256:5-261:5. Respondents do not dispute any limitations of claims 6 and 10 of the '142 patent with respect to the technical prong of the domestic industry requirement. The evidence shows that the technical prong of the domestic industry requirement has been satisfied for 6 and 10 of the '142 patent.

### 1. Claim 6

#### a. Claim element [6pre]: A cooling system for an electronic image assembly, the cooling system comprising:

There is no dispute that the MRI 75/86, MRI 75/86 Double, and MRI Gen 16 products have cooling systems for an electronic image assembly, and therefore satisfy the preamble element, to the extent it is limiting. CIB at 123. The evidence shows that these products meet this claim element. *See* CX-0420C; JX-0102C; JX-0101C; Tr. (Pokharna) at 516:14-519:1. Accordingly, MRI has shown that the MRI 75/86, MRI 75/86 Double, and MRI Gen 16 products satisfy this claim element. [66]

#### b. Claim element [6a]: a housing for the electronic image assembly;

There is no dispute that the MRI 75/86, MRI 75/86 Double, and MRI Gen 16 products comprise a housing for the electronic image assembly, and therefore satisfy this claim element. CIB at 123-124. The evidence shows that these products meet this claim element. *See* CX-0420C; JX-0102C; JX-0101C; Tr. (Pokharna) at 516:14-519:1. Accordingly, MRI has shown that the MRI 75/86, MRI 75/86 Double, and MRI Gen 16 products satisfy this claim element.

#### c. Claim element [6b]: a transparent cover panel forming a front portion of the housing, the transparent cover panel located forward of, and at least some distance from, the electronic image assembly;

There is no dispute that the MRI 75/86, MRI 75/86 Double, and MRI Gen 16 products comprise a transparent cover panel forming a front portion of the housing, the transparent cover panel located forward of, and at least some distance from, the electronic image assembly, and therefore satisfy this claim element. CIB at 124. The evidence shows that these products meet

[66] In addition, no party has argued that the preamble is limiting. *See generally* Updated Joint Claim Construction Statement (EDIS Doc. ID 792078).

this claim element. *See* CX-0420C; JX-0102C; JX-0101C; Tr. (Pokharna) at 516:14-519:1. Accordingly, MRI has shown that the MRI 75/86, MRI 75/86 Double, and MRI Gen 16 products satisfy this claim element.

**d. Claim element [6c]: an open loop airflow pathway passing through the housing behind the electronic image assembly;**

There is no dispute that the MRI 75/86, MRI 75/86 Double, and MRI Gen 16 products comprise an open loop airflow pathway passing through the housing behind the electronic image assembly, and therefore satisfy this claim element. CIB at 124. The evidence shows that these products meet this claim element. *See* CX-0420C; CX-1094C; CX-1096C; CX-1107C; JX-0102C; JX-0101C; Tr. (Pokharna) at 516:14-519:1. Accordingly, MRI has shown that the MRI 75/86, MRI 75/86 Double, and MRI Gen 16 products satisfy this claim element.

**e. Claim element [6d]: a closed loop gas circulation pathway contained within the housing, wherein a portion of said closed loop gas circulation pathway passes between said transparent cover panel and said electronic image assembly;**

There is no dispute that the MRI 75/86, MRI 75/86 Double, and MRI Gen 16 products comprise a closed loop gas circulation pathway contained within the housing, wherein a portion of said closed loop gas circulation pathway passes between said transparent cover panel and said electronic image assembly, and therefore satisfy this claim element. CIB at 125. The evidence shows that these products meet this claim element. *See* CX-0420C; CX-1094C; CX-1096C; CX-1107C; JX-0102C; JX-0101C; Tr. (Pokharna) at 516:14-519:1. Accordingly, MRI has shown that the MRI 75/86, MRI 75/86 Double, and MRI Gen 16 products satisfy this claim element.

**f. Claim element [6e]: an inlet located at a first portion of said housing for ingesting ambient air into said open loop airflow pathway;**

There is no dispute that the MRI 75/86, MRI 75/86 Double, and MRI Gen 16 products comprise an inlet located at a first portion of said housing for ingesting ambient air into said open loop airflow pathway, and therefore satisfy this claim element. CIB at 125. The evidence shows that these products meet this claim element. *See* CX-0420C; CX-1094C; CX-1096C; CX-1107C; JX-0102C; JX-0101C; Tr. (Pokharna) at 516:14-519:1. Accordingly, MRI has shown that the MRI 75/86, MRI 75/86 Double, and MRI Gen 16 products satisfy this claim element.

**g. Claim element [6f]: an exhaust located at a second portion of said housing for exhausting said ambient air from said open loop airflow pathway;**

There is no dispute that the MRI 75/86, MRI 75/86 Double, and MRI Gen 16 products comprise an exhaust located at a second portion of said housing for exhausting said ambient air from said open loop airflow pathway, and therefore satisfy this claim element. CIB at 125-126. The evidence shows that these products meet this claim element. *See* CX-0420C; CX-1094C; CX-1096C; CX-1107C; JX-0102C; JX-0101C; Tr. (Pokharna) at 516:14-519:1. Accordingly, MRI has shown that the MRI 75/86, MRI 75/86 Double, and MRI Gen 16 products satisfy this claim element.

**h. Claim element [6g]: an air circulation device positioned along said open loop airflow pathway between said inlet and said exhaust, wherein said air circulation device is configured to force said ambient air through the open loop airflow pathway when activated;**

There is no dispute that the MRI 75/86, MRI 75/86 Double, and MRI Gen 16 products comprise an air circulation device positioned along said open loop airflow pathway between said inlet and said exhaust, wherein said air circulation device is configured to force said ambient air

through the open loop airflow pathway when activated, and therefore satisfy this claim element. CIB at 126. The evidence shows that these products meet this claim element. *See* CX-0420C; CX-1094C; CX-1096C; CX-1107C; JX-0102C; JX-0101C; Tr. (Pokharna) at 516:14-519:1. Accordingly, MRI has shown that the MRI 75/86, MRI 75/86 Double, and MRI Gen 16 products satisfy this claim element.

**i. Claim element [6h]: a gas circulation device positioned along said closed loop gas circulation pathway to force circulating gas around the closed loop gas circulation pathway when activated;**

There is no dispute that the MRI 75/86, MRI 75/86 Double, and MRI Gen 16 products comprise a gas circulation device positioned along said closed loop gas circulation pathway to force circulating gas around the closed loop gas circulation pathway when activated, and therefore satisfy this claim element. CIB at 126. The evidence shows that these products meet this claim element. *See* CX-0420C; CX-1094C; CX-1096C; CX-1107C; JX-0102C; JX-0101C; Tr. (Pokharna) at 516:14-519:1. Accordingly, MRI has shown that the MRI 75/86, MRI 75/86 Double, and MRI Gen 16 products satisfy this claim element.

**j. Claim element [6i]: a heat exchanger located rearward of the electronic image assembly, wherein a first portion of said heat exchanger forms part of said open loop airflow pathway, and wherein a second portion of said heat exchanger forms part of said closed loop gas circulation pathway; and**

There is no dispute that the MRI 75/86, MRI 75/86 Double, and MRI Gen 16 products comprise a heat exchanger located rearward of the electronic image assembly, wherein a first portion of said heat exchanger forms part of said open loop airflow pathway, and wherein a second portion of said heat exchanger forms part of said closed loop gas circulation pathway, and therefore satisfy this claim element. The evidence shows that these products meet this claim element. *See* CIB at 126-127. CX-0420C; CX-1094C; CX-1096C; CX-1107C; JX-0102C; JX-

0101C; Tr. (Pokharna) at 516:14-519:1. Accordingly, MRI has shown that the MRI 75/86, MRI 75/86 Double, and MRI Gen 16 products satisfy this claim element.

**k. Claim element [6j]: one or more solar energy reduction layers located at said transparent cover panel, wherein each of said one or more solar energy reduction layers is configured to prevent a portion of solar energy entering said transparent cover panel from thermally interacting with the circulating gas at said portion of said closed loop gas circulation pathway passing between said transparent cover panel and said electronic image assembly or thermally interacting with said electronic image assembly.**

There is no dispute that the MRI 75/86, MRI 75/86 Double, and MRI Gen 16 products comprise one or more solar energy reduction layers located at said transparent cover panel, wherein each of said one or more solar energy reduction layers is configured to prevent a portion of solar energy entering said transparent cover panel from thermally interacting with the circulating gas at said portion of said closed loop gas circulation pathway passing between said transparent cover panel and said electronic image assembly or thermally interacting with said electronic image assembly, and therefore satisfy this claim element. *See* CIB at 127; Tr. (Pokharna) at 516:14-519:1. Mr. Brown testified that all of MRI's products have [redacted] Tr. (Brown) at 261:12-262:2. Accordingly, MRI has shown that the MRI 75/86, MRI 75/86 Double, and MRI Gen 16 products satisfy this claim element.

**2. Claim 10: The cooling system of claim 6 wherein: at least one of said one or more solar energy reduction layers comprise a film having anti-reflection properties.**

There is no dispute that the MRI 75/86, MRI 75/86 Double, and MRI Gen 16 products meet this claim limitation. *See* CIB at 127-128; Tr. (Pokharna) at 516:14-519:1. Mr. Brown testified that [redacted]

[redacted]. Tr. (Brown) at 261:12-262:2. Accordingly, MRI has shown that the MRI 75/86, MRI 75/86 Double, and MRI Gen 16 products satisfy this claim element.

## VII. DOMESTIC INDUSTRY ECONOMIC PRONG

In Order No. 19, the undersigned granted Complainant's motion for summary determination that the economic prong of the domestic industry requirement is satisfied. *See* Order No. 19 (June 15, 2023). The Commission determined not to review the initial determination. *See* EDIS Doc. ID 800420. Accordingly, the economic prong of the domestic industry requirement has been satisfied.

## VIII. INVALIDITY

### A. The Asserted Prior Art References

#### 1. U.S. Patent No. 7,800,706 ("Kim") (RX-1396)

U.S. Patent No. 7,800,706 to Sun-jin Kim and Seung-hoon Oh was issued on September 21, 2010. RX-1396 (hereinafter, "Kim") at cover. Kim is entitled "Cooling fan unit and display apparatus having the same." *Id.* The application that issued as Kim was filed on July 16, 2007. *Id.* There is no dispute that Kim is prior art to the '595 patent and the '322 patent under pre-AIA 35 U.S.C. § 102(e)(2).[67] *See* RIB at 78 n.8.

#### 2. U.S. Patent Application Publication No. 2003/0043091 ("Takeuchi") (RX-1367)

U.S. Patent Application Publication No. 2003/0043091 to Yukihisa Takeuchi et al. was published on March 6, 2003. RX-1367 (hereinafter, "Takeuchi") at cover. Takeuchi is entitled

[67] The pre-AIA version of 35 U.S.C. § 102 is applicable to the '595 patent and the '322 patent because they claim priority before March 16, 2013. *See* Leahy-Smith America Invents Act, Pub. L. No. 112-29, § 3(n)(1), 125 Stat. 284, 293 (Sept. 16, 2011).

"Display system with cooling device." *Id.* There is no dispute that Takeuchi is prior art to the '595 patent under pre-AIA 35 U.S.C. § 102(b). *See* RIB at 70 n.7.

**3. U.S. Patent Application Publication No. 2006/0199514 ("Kimura") (RX-1373)**

U.S. Patent Application Publication No. 2006/0199514 to Akira Kimura was published on September 7, 2006. RX-1373 (hereinafter, "Kimura") at cover. Kimura is entitled "Cooling fan and image display apparatus." *Id.* There is no dispute that Kimura is prior art to the '322 patent under pre-AIA 35 U.S.C. § 102(b). *See* RIB at 96 n.12.

**4. U.S. Patent Publication No. 2007/0171353 ("Hong") (RX-1374)**

U.S. Patent Application Publication No. 2007/0171353 to Hee-Jung Hong was published on July 26, 2007. RX-1374 (hereinafter, "Hong") at cover. Hong is entitled "Liquid crystal display device." *Id.* Because Hong was published before the earliest alleged invention date of the '595 patent and the '322 patent, there is no dispute that Hong is prior art to the '595 patent and the '322 patent under pre-AIA 35 U.S.C. §§ 102(a) and (e)(1). *See* RIB at 83 n.9.

**5. Japanese Unexamined Patent Application Publication H11-68363 ("Takahashi") (RX-1356)**

Japanese Unexamined Patent Application Publication H11-68363 to Takahashi Atsushi was published on March 9, 1999. RX-1356.0005 (hereinafter, "Takahashi"). Takahashi is entitled "Heat dissipation structure for electronics." *Id.* There is no dispute that Takahashi is prior art to the '595 patent and the '322 patent under pre-AIA 35 U.S.C. § 102(b). *See* RIB at 87 n.10.

**6. Japanese Unexamined Patent Application Publication 2006-330196 ("Tachikawa") (RX-1353)**

Japanese Unexamined Patent Application Publication 2006-330196 to Hitoshi Tachikawa was published on December 7, 2006. RX-1353.0010 (hereinafter, "Tachikawa"). Tachikawa is

entitled "Plasma television and image display device." *Id.* There is no dispute that Tachikawa is prior art to the '322 patent under pre-AIA 35 U.S.C. § 102(b). *See* RIB at 91 n.11.

**7. International Patent Application Publication WO 2007/116116 ("Karppanen") (RX-1351)**

International Patent Application Publication WO 2007/116116 to Pasi Karppanen *et al.* ("Karppanen") was published on October 18, 2007 based on International Patent Application No. PCT/FI2006/050145 which was filed on April 11, 2006. RX-1351. Karppanen is entitled "Electronic Information Board." *Id.* There is no dispute that Karppanen is prior art to the '287 patent, '740 patent, and '142 patent at least under pre-AIA U.S.C. § 102(a) and § 102(e).[68] *See* RIB at 104 n.13.

**8. United Kingdom Patent Application No. GB 2402205A ("Yare") (RX-1398)**

United Kingdom Patent Application No. GB 2402205A to Leslie John Yare. ("Yare") was published on December 12, 2004. RX-1398. Yare is entitled "A display system cabinet and display system including heat removal means." *Id.* There is no dispute that Yare is prior art to the '740 patent and the '142 patent under pre-AIA U.S.C. § 102(b). *See* RIB at 130 n.16.

**9. U.S. Patent No. 6,392,727 ("Larson") (RX-1386)**

U.S. Patent No. 6,392,727 to Brent D. Larson and Elias S. Haim ("Larson") issued on May 21, 2002. RX-1386. Larson is entitled "Reduced Reflectance Polarized Display." *Id.* There is no dispute that Larson is prior art to the '142 patent under pre-AIA U.S.C. § 102(b). *See* RIB at 122 n.15.

[68] The pre-AIA version of 35 U.S.C. § 102 is applicable to the '287 patent, the '740 patent, and the '142 patent because they claim priority before March 16, 2013. *See* Leahy-Smith America Invents Act, Pub. L. No. 112-29, § 3(n)(1), 125 Stat. 284, 293 (Sept. 16, 2011).

### B. The '595 Patent

Respondents contend that claims 1, 4, 7, and 8 are invalid as anticipated and/or obvious and for improper inventorship.[69] RIB at 69-89, 146-70. Respondents assert that claim 1 is anticipated and/or rendered obvious by either Takeuchi or Kim. *Id.* at 70-82. Respondents further assert that the following prior art references render claims 4, 7, and 8 obvious:

- Claim 4: Kim and Hong
- Claim 7: Kim and Hong
- Claim 8: Kim, Hong, and Takahashi

*Id.* at 83-89.

For the reasons set forth below, Respondents have proven that claims 1, 4, 7, and 8 of the '595 patent are invalid.

#### 1. Claim 1

Respondents contend that claim 1 of the '595 patent is anticipated and/or rendered obvious by either Takeuchi or Kim. RIB at 70-82.

##### a. Takeuchi

Respondents contend that claim 1 of the '595 patent is anticipated and/or rendered obvious by either Takeuchi. RIB at 70-77. MRI argues that Takeuchi, alone or in combination with the knowledge of one of skill in the art, does not teach limitations [1a], [1b], and [1c] of claim 1. CIB at 128-34. For the reasons set forth below, Respondents have shown by clear and convincing evidence that Takeuchi anticipates claim 1 of the '595 patent. In addition, to the

[69] Respondents do not contend that claim 9, which is asserted solely for purposes of the technical prong, is invalid.

extent claim 1 is not anticipated by Takeuchi, Respondents have also shown by clear and convincing evidence that Takeuchi renders obvious claim 1 of the '595 patent.

**i. Claim element [1a]: A system for cooling an electronic display having a posterior display surface and contained within a housing, the system comprising**

The parties dispute whether Takeuchi discloses a system for cooling an electronic display having a posterior display surface and contained within a housing. There is no dispute that Takeuchi discloses a system for cooling a display. Takeuchi at Abstract, ¶¶ [0002], [0007].

The primary dispute between the parties is whether the display disclosed in Takeuchi is an "electronic display" within the scope of this limitation. Respondents argue that Takeuchi's display is an electronic display. *See* RIB at 70-71. Mr. Smith-Gillespie testified that in his opinion, Takeuchi describes a system for cooling an electronic display having a posterior display surface and contained within a housing. Tr. (Smith-Gillespie) at 929:3-931:16. Mr. Smith-Gillespie testified that the electronic display of Takeuchi is a "light-emitting display that utilizes LEDs around the circumference of the display that illuminate a light guide. The light travels by total internal reflection through the display." *Id.* at 929:14-24. He explained that the light guides can be adjusted electronically to create an image on the display. *Id.*; *see also* Takeuchi ¶¶ [0027]-[0030] (describing this display).

MRI argues that this is not an "electronic display" because Takeuchi "discloses an *electromechanical* display where individual mechanical actuators are configured to move elements away from contact with the system's light guide plate to create a dark spot on the display at the location of each individual picture element." CIB at 129 (citing Tr. (Credelle) at 1165:2-1166:10) (emphasis in original).

The evidence shows that Takeuchi's display is an electronic display. Both experts agreed that the preamble of claim 1 does not limit the claimed electronic display system to any specific type of electronic display. Tr. (Smith-Gillespie) at 930:3-6; Tr. (Credelle) at 1202:24-1203:1. The evidence shows, clearly and convincingly, that Takeuchi's display is an "electronic" display. Mr. Smith-Gillespie testified that this limitation is met because Takeuchi includes panel portions that receive an inputted image signal and cause a video image to be displayed. Tr. (Smith-Gillespie) at 929:3-8. Mr. Credelle agreed that Takeuchi's display system includes electronic components, including the video drivers that are involved in the operation of Takeuchi's device, and provided no persuasive testimony that the Takeuchi display would not constitute an electronic display. Tr. (Credelle) at 1204:6-20; *see* RIB at 71-72.

The parties also dispute whether Respondents have identified a "posterior display surface." This term was construed to mean "rear-facing surface of the display assembly." Order No. 13 at 42. Respondents identified the posterior display surface as the rear side of the light guide plate/panels (16, 17). Tr. (Smith-Gillespie) at 930:13-25; Takeuchi at Fig. 5; RDX-0007 at 18:

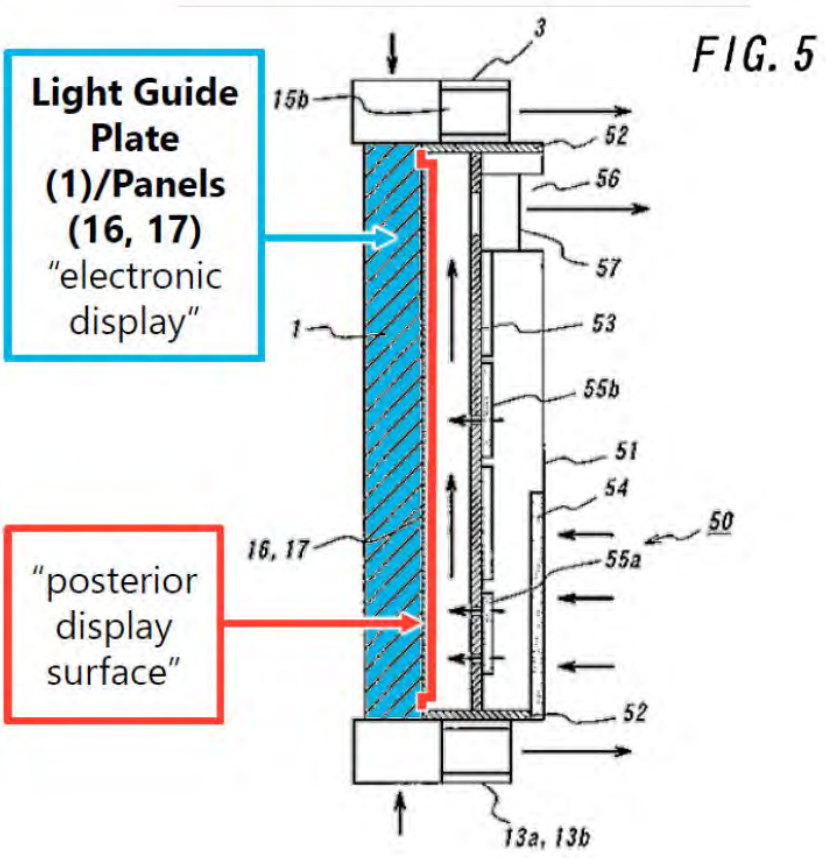


The evidence of record shows, clearly and convincingly, that Takeuchi discloses a "posterior display surface" as required by the claims. Mr. Smith-Gillespie's undisputed testimony shows that the rear side of the light guide plate/panels provide the rear-facing surface of the display assembly. Tr. (Smith-Gillespie) at 930:13-25. This opinion is unrebutted by any contradictory expert testimony. At the hearing, MRI's expert, Mr. Credelle, presented no opinion arguing the surface identified by Mr. Smith-Gillespie was not a posterior display surface. *See* Tr. (Credelle) at 1164:24-1170:16.

MRI also argues, based solely on attorney-argument, that this cannot be a posterior display surface because the surface identified are "multiple distinct, non-overlapping surfaces as shown in Takeuchi's Figure 2 (right) as well as Takeuchi's Figure 3." CRB at 52; *see also* CIB at 129. However, there is no support for MRI's argument that the rear-facing surface of the display assembly cannot be made up of distinct pieces.

MRI further argues, also based solely on attorney argument, that the "posterior display surface" identified by Respondents is incorrect because it does not include light sources 7a and 7b, which MRI argues is "in line with fan 15a" and "in line with fan 13a" based on Fig. 1 of Takeuchi. *See* CIB at 131. This argument was not made by MRI in its prehearing brief and is therefore waived. *See* CPHB at 145-146; RRB at 42; Ground Rule 9.2.[70]

The evidence further shows, clearly and convincingly, that the electronic display is contained within the housing, as required by this claim.[71] As Mr. Smith-Gillespie explained, the housing is made up by the combination of a frame (3) and rear cover (51). Tr. (Smith-Gillespie) at 931:1-16. MRI argues for the first time in its post-hearing reply brief that Respondents failed to show that the electronic display of Takeuchi is contained within a housing. CRB at 52-53; *see also* CPHB at 144-48 (not raising this argument); CIB at 128-31 (same). Accordingly, MRI's argument has been waived. *See* Ground Rules 9.2, 13.1. On the merits, the undersigned is unpersuaded by MRI's attorney argument. MRI's argument is based on its own labeling of the scope of the frame (3) in Takeuchi. *See* CRB at 53 (annotating Figs. 1, 5). But this attorney

[70] Moreover, absent expert testimony, Complainant's arguments regarding the relative positions of various components do not appear clearly supported, and it is also unclear how Mr. Smith-Gillespie's testimony contradicts Respondents' non-infringement analysis.

[71] Respondents presented no evidence that the entire system for cooling is contained within the housing under the alternative interpretation of this claim. *See* CRB at 52.

argument appears to narrowly label the scope of the frame in Figure 5 to exclude portions and is unsupported by expert opinion. The evidence therefore shows that Takeuchi's housing contains the electronic display.

For all these reasons, Respondents have shown, clearly and convincingly, that Takeuchi discloses a system for cooling an electronic display having a posterior display surface and contained within a housing.

#### ii. Claim element [1b]: a constricted convection plate placed posterior to the posterior display surface

The parties dispute whether Takeuchi discloses a constricted convection plate as construed in the claim construction order. In particular, the parties dispute whether the partition plate of Takeuchi forms a sufficiently constricted channel. "Constricted convection plate" was construed to mean "a plate configured to form part of a constricted convection channel." Order No. 13 at 40. And "constricted convection channel" was construed to mean "constricted channel through which air may flow to remove heat from the [posterior display surface/posterior surface]." *Id.*

Respondents contend that the partition plate of Takeuchi is a constricted convection plate. RIB at 72-73. Takeuchi teaches "a partition plate for forming a flow path of the fluid in contact with the back of the light guide plate at least in a region adjacent to the back of the light guide plate." Takeuchi ¶ [0011]. As shown in Figure 5, the "partition plate 53 of generally flat shape is placed between the rear cover 56 and the back sides of the light guide plate 1 and the panels 16, 17." *Id.* ¶ [0040] (referring to Fig. 5); Tr. (Smith-Gillespie) at 931:17-932:18.

FIG. 5

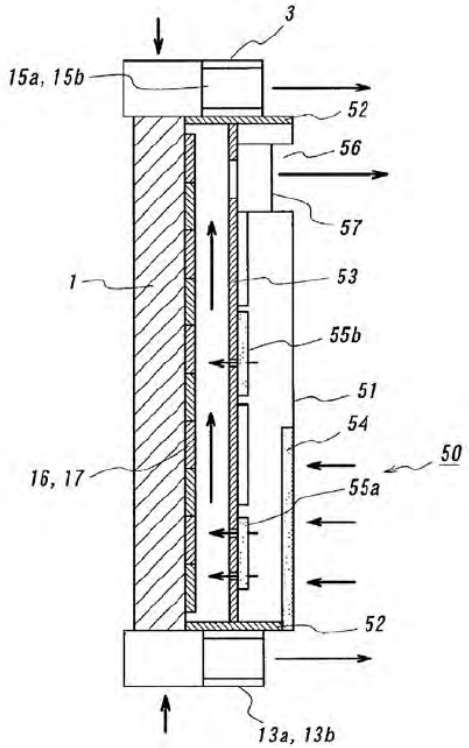


In Mr. Smith-Gillespie's opinion, the partition plate is a constricted convection plate because it "creates a flow path for a fluid to move through, fluid being air, to move through and along the backlight of the light plate to basically remove heat from that portion of the display." Tr. (Smith-Gillespie) at 932:7-12.

MRI argues that this is not a constricted convection plate because Mr. Smith-Gillespie "ignore[d] the air flowing into the cooling chamber through the additional intake vent shown in Fig. 5 where air flows through filter 55b[.]" CIB at 132 (citing Tr. (Smith-Gillespie) at 1046:16-1048:10). Mr. Credelle testified that in his opinion, Takeuchi teaches that there are multiple entrances because of these additional inputs for cooling the display. Tr. (Credelle) at 1167:6-1169:14. MRI also relies on Mr. Smith-Gillespie's testimony in cross-examination that MRI

contends shows that Takeuchi will not teach a constricted channel in every implementation. CRB at 55 (citing Tr. (Smith-Gillespie) at 1053:15-21, 1054:8-12).

The undersigned finds that there is clear and convincing evidence that Takeuchi discloses a constricted convection plate placed posterior to the posterior display surface. There is no dispute that the partition plate is placed posterior to the posterior display surface. Nor is there any dispute that the partition plate forms a channel through which air may flow to remove to remove heat from the posterior display surface: "a partition plate for forming a flow path of the fluid in contact with the back of the light guide plate at least in a region adjacent to the back of the light guide plate." Takeuchi ¶ [0011]. The only dispute, therefore, is whether the plate and the channel form a "constricted" channel.

As the undersigned explained above, the word "constricted" was not construed and should be understood by reference to its plain and ordinary meaning. Mr. Smith-Gillespie opined that the channel area is "constricted" based on the structural constraints provided by the partition plate 53. *See* RIB at 74; Tr. (Smith-Gillespie) at 931:25-933:24; *see also id.* at 1052:12-19. MRI's primary argument that this is not a "constricted" channel is based on the existence of an additional intake vent in the middle of the asserted channel. *See* CIB at 132-133. But there is no indication that the addition of this vent would prevent air flow from being constricted through the channel between the posterior display surface and the partition plate. *See* Tr. (Credelle) at 1205:3-1206:6 (agreeing that Takeuchi does not describe air "exit[ing] the cooling chamber from the additional air input in the middle of the partition plate"); RIB at 76.[72]

[72] Moreover, in the context of infringement of claim 4 of the '595 patent, MRI argues that the "constricted convection plate" limitation is met although the asserted constricted convection plate includes [redacted].

MRI's reliance on Mr. Smith-Gillespie's testimony on cross-examination is misplaced. MRI argues that because Mr. Smith-Gillespie allegedly admitted that he did not know if every possible implementation of Takeuchi would have a constricted convection channel, then it could not anticipate or render obvious claim 1. *See* CRB at 55. This argument fails to address Takeuchi's specific disclosure of "a partition plate for forming a flow path of the fluid in contact with the back of the light guide plate" (RX-1367 ¶ [0011]) and used for "limiting the flow path of the fluid in contact with the back of the light guide plate" (*id.* ¶ [0013]).

For the reasons set forth above, Respondents have shown by clear and convincing evidence that Takeuchi discloses a constricted convection plate placed posterior to the posterior display surface.

**iii. Claim elements [1c] and [1d]: [1c] two side panels placed adjacent to the constricted convection plate and the posterior display surface, [1d] defining a constricted convection channel having an entrance and an exit; and**

The parties dispute whether Takeuchi teaches "two side panels, placed adjacent to the constricted convection plate and the posterior display surface, defining a constricted convection channel having an entrance and an exit." For the reasons discussed below, the undersigned finds that Respondents have proven by clear and convincing evidence that Takeuchi discloses this limitation. Respondents have also proven by clear and convincing evidence that, to the extent such side panels are not already present, it would be obvious to modify Takeuchi to include them.

Respondents argue that the two side panels are the inner surface portions of the rear cover as described in Takeuchi. RIB at 74-75. As Takeuchi explains, "[t]he back sides of the light guide plate 1 and the panels 16, 17 are completely covered by a rear cover. Thermal insulating materials 52 are applied to the inner surface portions of the rear cover 51 in its upper and lower

regions adjacent to the light sources and cooling fans 13a, 13b; 15a, 15b." Takeuchi ¶ [0040]. Mr. Smith-Gillespie testified that "[o]ne would see those same 52 elements if a horizontal cross-section were taken through the display, so that forms a sealed chamber, with the exception of a pair of inlets and an outlet." Tr. (Smith-Gillespie) at 932:24-933:8. He further testified that these purported side panels would "prevent the air from diverging outward from behind the -- the light guide and panels 16 and 71 and thereby not cooling the display[]" and that they "prevent the influx of dirty air." *Id.* at 933:9-19.

MRI argues that Takeuchi does not disclose side panels. CIB at 134-35. It relies on the testimony of Mr. Credelle, who testified that Takeuchi did not disclose side panels, and that the sides would be open because it would provide additional input for filtered air to cool the sides. Tr. (Credelle) at 1170:3-16. MRI also argues that it would not be obvious to add side panels.

The undersigned finds that there is clear and convincing evidence that Takeuchi discloses two side panels placed adjacent to the constricted convection plate and the posterior display surface. Mr. Smith-Gillespie testified that the display system is enclosed, noting the formation of a "sealed chamber." *See* Tr. (Smith-Gillespie) at 932:19-933:8; RDX-0007.0021-22. This opinion is clearly supported by Takeuchi. Takeuchi explicitly discloses that the rear cover "completely cover[s]" the light guide plate and panels. Takeuchi ¶ [0040]. It also discloses that the partition plate "defines a cooling chamber on the back sides of the light guide plate 1 and the panels 16, 17." *Id.* It further discloses that ambient air is introduced into the cooling chamber "defined by the partition plate 53 through the filters 54, 55a, 55b" and is exhausted "from the exhaust vent in the upper portion of the partition plate 53." *Id.* ¶ [0041] (discussing ambient air introduced "into the cooling chamber defined by the partition plate 53 through the filters 54, 55a, 55b"). While the images of Takeuchi show vertical cross-sections, Takeuchi's explicit

discussion clearly supports Mr. Smith-Gillespie's opinion that a horizontal cross-section of Takeuchi would show side panels. *See* Tr. (Smith-Gillespie) at 932:24-933:8; RDX-0007.0021-22. Moreover, while Mr. Credelle suggested the sides might be open, he then stated that air coming in from the sides would "of course" be "filtered air." Tr. (Credelle) at 1170:11-16. Mr. Credelle does not explain how open sides would be "filtered." Moreover, Takeuchi discloses filters as openings in a "cover" or "plate." *See* Takeuchi ¶¶ [0040] (discussing a partition plate and rear cover with filtered intake vents), [0041] (discussing air entering through the filters "while removing foreign matters in the ambient air"); Tr. (Smith-Gillespie) at 932:24-933:8 (discussing a sealed chamber with inlets through filters 54, 55a, and 55b). Mr. Credelle's opinion fails to address Takeuchi's disclosures that a "cooling chamber" is created and that ambient air is introduced through filters in the partition plate.

To the extent Takeuchi does not disclose side panels, the evidence clearly and convincingly shows that one of skill in the art would have reason to modify Takeuchi to include them. Mr. Smith-Gillespie explained that making this modification would have been obvious for two reasons: first, keeping out dirty air, and second, preventing the airflow from the backlight from diverging out from the display and disrupting cooling, reducing uniformity. Tr. (Smith-Gillespie) at 934:10-23. Takeuchi's specification supports both reasons. It explains that the filters which are positioned at openings in the partition plate are designed to remove foreign matters in ambient air. Takeuchi ¶ [0037]. And it discusses that uniform cooling is a goal of the cooling system. *Id.* ¶ [0041]. For the reasons discussed above, Mr. Credelle's testimony regarding open sides is unpersuasive and, in addition, does not controvert Mr. Smith-Gillespie's persuasive reasons to include side panels. The evidence shows, clearly and convincingly, that one of ordinary skill would have reason to modify Takeuchi to include two side panels placed

adjacent to the constricted convection plate and the posterior display surface such as those at the top and bottom (to the extent they are not already present). The evidence also shows, clearly and convincingly, that there would be a reasonable expectation of success. Mr. Smith-Gillespie testified that, providing side panels such as those at the top and the bottom would prevent air from diverging outward and not cooling the display, as well as preventing the influx of dirty air. *See* Tr. (Smith-Gillespie) at 933:9-19; *see* Tr. (Smith-Gillespie) at 934:24-935:2 (explaining that Takeuchi would not work without side panels);[73] *see also id.* at 1055:24-1056:1 (explaining that Takeuchi would work for cooling).

The evidence also shows that such side panels would define a constricted convection channel having and entrance and exit. As Mr. Smith-Gillespie testified, the entrance to the constricted convection channel is through the filter mechanism 55a, and air flows through this channel to the exit, located at the recessed portion, 56, and fan, 57. Tr. (Smith-Gillespie) at 935:14-936:11; Takeuchi ¶¶ [0040]-[0041]. MRI did not dispute that there was a channel with an entrance or exit. CIB at 134-35. MRI argued that there is not a constricted convection channel, for the same reasons discussed with respect to element [1b]. *Id.* As discussed above Respondents have shown that Takeuchi discloses a constricted convection channel.

For the reasons set forth above, Respondents have shown by clear and convincing evidence that Takeuchi discloses two side panels placed adjacent to the constricted convection plate and the posterior display surface, defining a constricted convection channel having an entrance and an exit. In addition, there is clear and convincing evidence that one of ordinary

[73] The question and answer cited here in the transcript read "with outside panels." *Id.* The undersigned finds that in the context, both the question and answer refer to "without side panels." *See, e.g.*, Tr. (Smith-Gillespie) at 934:8-9, 13-14, 17-19 (all referring to "side panels" not "outside panels").

skill would have reason to modify Takeuchi to include two side panels (to the extent they are not present) placed adjacent to the constricted convection panel, with a reasonable expectation of success.

**iv. Claim element [1e]: a fan placed to draw air from outside of the housing through the constricted convection channel.**

There is no dispute that Takeuchi discloses a fan placed to draw air from outside of the housing through the asserted constricted convection channel. *See* CIB at 128-35, CRB at 51-59. The "draw air" term was construed to have its plain and ordinary meaning. Order No. 13 at 29. Takeuchi discloses an exhaust vent and blower, where the blower "may be comprised of a sirocco fan[.]" Takeuchi ¶ [0040]; *see also* Tr. (Takeuchi) at 936:3-11. This disclosure from Takeuchi clearly discloses a fan placed to draw air from outside of the housing through the constricted convection channel.

***

For the reasons set forth above, Respondents have shown by clear and convincing evidence that Takeuchi anticipates claim 1 of the '595 patent. To the extent Takeuchi does not anticipate claim 1, Respondents have also clearly and convincingly shown that one of ordinary skill in the art would have reason to modify Takeuchi to include two side panels, and a reasonable expectation of success in doing so. Further, as discussed in Part VIII.G, the evidence of secondary considerations presented is entitled to little weight. Accordingly, Respondents have proven by clear and convincing evidence that claim 1 of the '595 patent is anticipated and/or obvious in view of Takeuchi.

**b. Kim**

Respondents contend that claim 1 of the '595 patent is anticipated by Kim. RIB at 78-82. MRI argues that Kim does not disclose limitations [1b], [1c], and [1d] of claim 1. CIB at 134-37. For the reasons set forth below, the undersigned finds that Respondents have proven by clear and convincing evidence that Kim anticipates claim 1 of the '595 patent.

Although Respondents' brief also argues obviousness in the alternative, it does not appear to argue in the alternative that any limitation of Kim is rendered obvious if Kim did not disclose that limitation. RIB at 78-82. Likewise, the testimony of Mr. Smith-Gillespie about Kim was limited to anticipation. Tr. (Smith-Gillespie) at 937:15-21, 938:25-944:16. Accordingly, any additional arguments beyond anticipation have been waived.

**i. Claim element [1a]: A system for cooling an electronic display having a posterior display surface and contained within a housing, the system comprising**

It is undisputed that Kim discloses a system for cooling an electronic display having a posterior display surface and contained within a housing, under any of the interpretations the parties put forth for purposes of infringement. *See* CIB at 135-36 (not disputing this limitation); *see also* discussion above relating to infringement (discussing interpretations of this limitation). As Mr. Smith-Gillespie testified, Kim discloses a liquid crystal display panel, 120, and a housing in the form of the casing, 110, that has two parts, a front casing, 111, and rear casing, 115, and a system for cooling that display. Tr. (Smith-Gillespie) at 940:14-941:8; Kim at Abstract; 4:8-18. The undisputed evidence thus shows that the electronic display (and the entire system for cooling) are contained within the housing. As Mr. Smith-Gillespie explained, and Respondents did not dispute, the posterior surface of the backlight unit, 130, is the posterior display surface as that term was construed. Tr. (Smith-Gillespie) at 940:19-24. Accordingly, there is clear and

convincing evidence that Kim discloses a system for cooling an electronic display having a posterior display surface and contained within a housing.

#### ii. Claim element [1b]: a constricted convection plate placed posterior to the posterior display surface

The parties dispute whether Kim discloses a constricted convection plate posterior to the posterior display surface. The parties dispute two aspects of this claim element: first, whether the alleged plate forms a channel as required by the construction of a constricted convection plate, and second, whether that channel is a constricted convection channel as required by the construction of that term.

Kim discloses a shield cover, numbered as 140, which Respondents contend is the constricted convection plate. RIB at 79. Mr. Smith-Gillespie annotated Figures 2 and 5 to highlight the shield cover:

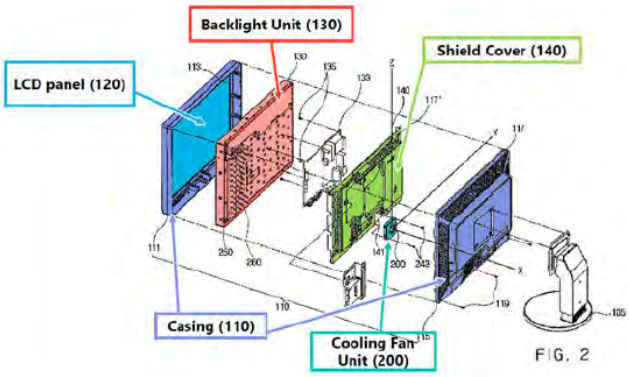

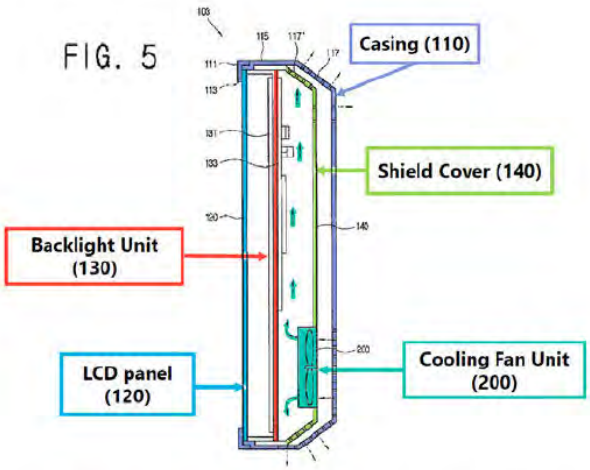


RDX-0007 at 29-30 (showing Kim at Figs. 2, 5). Respondents argue that Figure 5's arrows directly show the direction of airflow through the channel from an entrance to an exit. RRB at 46. As Mr. Smith-Gillespie explained, the shield cover is behind the backlight unit and spaced apart from it. Tr. (Smith-Gillespie) at 941:9-22; Kim at 4:52-63. Kim explains that "[t]he shield cover 140 may be formed in diverse shapes such that the flowing air produced by the cooling fan 210 can be efficiently guided." Kim at 4:61-63. As Kim further explains:

> Accordingly, the cooling fan 210 may be provided adjacent to the light source 131 and the circuit board 133 which are heat generating parts of the backlight unit 130. Thus, the cooling air generated by the cooling fan 210 contacts the light source 131 that is widely arranged on the rear side of the backlight unit 130 while the cooling air flows through a space among the backlight unit 130, the circuit board 133 and the shield cover 140. This allows the widely arranged light source 131 to be cooled efficiently.

*Id.* at 5:7-15. The "exit" of the constricted convection channel formed by the plate is the "plurality of air slits 117' through which flowing air produced by the cooling fan 210 comes in and out." *Id.* at 4:59-61; *see also* RDX-0007 at 34.

MRI asserts that the shield cover is not a constricted convection plate because of the plurality of air slits included throughout the periphery of the shield cover. CIB at 135-36. For example, Figure 4 shows some of these air slits (117):

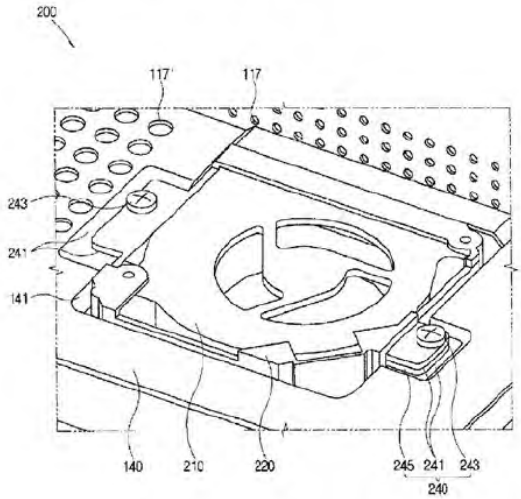


Kim at Fig. 4; *id.* at 4:22-24. In Mr. Credelle's opinion, because there are many holes through which air can flow, the air flow is not constricted as required by this claim. Tr. (Credelle) at 1160:18-1161:3. Mr. Credelle further opined that air flow is unconstrained and does not run in a channel, as it runs in all directions from the location of the fan. Tr. (Credelle) at 1161:4-23; 1162:20-1164:24; CDX-0011C at 24:

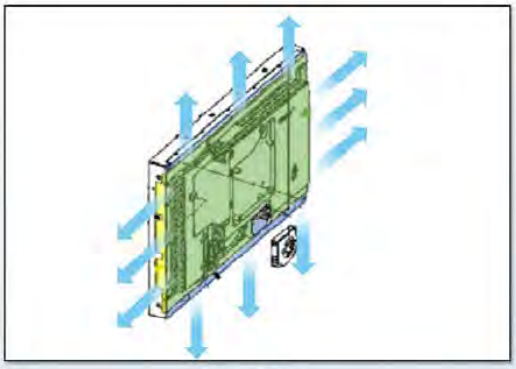

**Kim Patent**
*RX-1396.3 at Fig.2 (annotated)*

MRI contends that because air flows in "all directions," there is no channel and therefore it does not anticipate Kim. CIB at 135-36. MRI also points to Mr. Smith-Gillespie's testimony in which they claim he admitted that air will flow in all directions as evidence that there is no channel formed by this plate. CRB at 59-60 (citing Tr. (Smith-Gillespie) at 1066:13-15, 1067:3-1068:9).

The undersigned finds that Respondents have proven by clear and convincing evidence that Kim discloses a constricted convection plate placed posterior to the posterior display surface. There is no dispute that the alleged plate, the shield cover, is placed posterior to the posterior display surface, so the only dispute is whether the shield cover is a "constricted convection plate" as required by this claim. "Constricted convection plate" was construed to mean "a plate configured to form part of a constricted convection channel." Order No. 13 at 40. And "constricted convection channel" was construed to mean "constricted channel through which air may flow to remove heat from the [posterior display surface/posterior surface]." *Id.*

The evidence shows, clearly and convincingly, that airflow through the asserted channel is constricted in Kim. The air slits disclosed by Kim allow air to flow out (as identified in Figure 5 of Kim), but air flow is constricted and provides an identified air flow path from the fan to the air slits on the periphery through the area between the shield cover and the backlight unit, as shown in Figure 5. *See* Kim at Fig. 5 (including arrows showing airflow); *id.* at 7:57-59; *see also* Tr. (Credelle) at 1214:12-17 (agreeing that cooling fan 200 "pushes air into the space between the shield cover 140 and the backlight unit 130"); Tr. (Smith-Gillespie) at 941:15-22; *see also id.* at 1067:16-24 ("the predominant airflow is vertically").[74] As Kim also explains, the

[74] Moreover, even if the airflow occurs as shown as Complainant sets forth in CRB at 60 (providing an annotated Fig. 2 of Kim), this airflow is still constrained in the area between the shield cover and

shield cover "may be formed in diverse shapes such that the flowing air produced by the cooling fan 210 can be efficiently guided," thus indicating a guided airflow. Kim at 4:61-63; *see also* RIB at 79-80; RRB at 45-47. The evidence further shows that airflow through this space operates to remove heat from the posterior display surface. Kim at 5:34-38 ("cooling air flows through a space between the shield cover 140 and the backlight unit 130"); Tr. (Credelle) at 1159:3-24 ("[A[t the bottom of that, there is a fan. And that fan will generate the cooling into this cavity."); Tr. (Smith-Gillespie) at 943:10-21. Accordingly, the evidence clearly and convincingly shows the existence of a "constricted convection channel" and that the shield cover of Kim forms a "constricted convection plate." MRI's argument that the airflow is "unconstrained and does not flow in a channel[,]" CIB at 136, is unsupported by Kim and the cited evidence.

Accordingly, Respondents have shown by clear and convincing evidence that Kim discloses a constricted convection plate placed posterior to the posterior display surface.

**iii. Claim elements [1c] and [1d]: [1c] two side panels placed adjacent to the constricted convection plate and the posterior display surface, [1d] defining a constricted convection channel having an entrance and an exit; and**

The parties dispute whether Kim discloses two side panels placed adjacent to the constricted convection plate and the posterior display surface, defining a constricted convection channel having an entrance and an exit. As discussed above, MRI disputes whether there is a

---

backlight unit. As discussed above regarding infringement by the Accused Large-Sized Products of claim 4 of the '595 patent (and as argued by MRI), [redacted] do not necessarily preclude coverage by this limitation.

constricted convection channel as required by this claim. Further, MRI disputes whether Kim discloses the claimed "two side panels."

Respondents assert that the two side panels of Kim are the portions of the shield cover that are bent at 90 degrees from the plane of the shield cover, which they contend form side panels for the airflow pathways. RIB at 80-81; Tr. (Smith-Gillespie) at 942:7-20. Mr. Smith-Gillespie showed these in his annotated versions of Figures 2 and 5. RDX-0007 at 35-36.

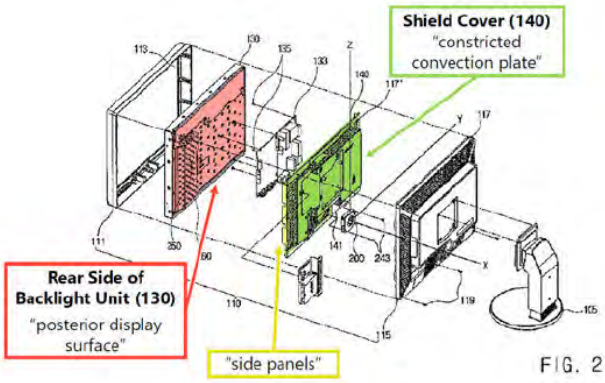


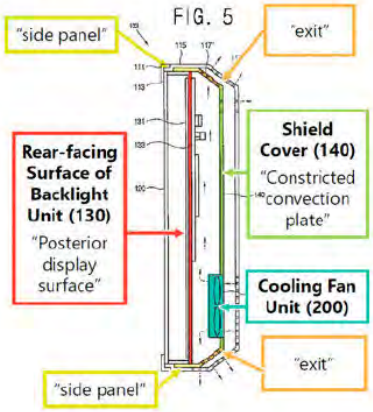


Figure 2 shows two of these surfaces running vertically along the sides of the posterior display surface, while Figure 5, which appears to be a vertical cross-section of Kim, shows two of these surfaces running horizontally along the top and bottom of the posterior display surface.[75]

MRI argues that these are not side panels because they do not contain and direct air flow through a channel. CIB at 136-37. MRI argues that because air flows towards the left and right side panels, they do not define a constricted convection channel. *Id.* Mr. Credelle testified that in his opinion, the side panels shown in Figure 5 do not define a constricted convection panel because they are at the top and bottom. Tr. (Credelle) at 1161:4-23. He also testified that the

[75] Mr. Smith-Gillespie testified that he was not sure if Figure 5 was a horizontal or vertical cross section, but in either case, side panels are clearly shown at the left and right sides in Fig. 2. *See* Tr. (Smith-Gillespie) at 1056:5-9; Kim at 7:53-59.

side panels on the side, shown in Figure 2, are not in the airflow path when the device is fully assembled and therefore they do not define a channel. *Id.* at 1161:24-1162:8. And in his opinion, even if they were extended into the channel, they are not in the airflow path because air would exit along the slits on the sides. *Id.* at 1162:9-19. MRI also argues that because these panels make contact with only the left- and right-facing surfaces and are not affixed to the rear-facing surface, they are not adjacent to the rear surface. CRB at 62.

The evidence of record clearly and convincingly shows that Kim discloses two side panels placed adjacent to the constricted convection plate and the posterior display surface. The evidence shows that the alleged side panels are adjacent to both the constricted convection plate and posterior display surface. Mr. Smith-Gillespie persuasively testified that the Figures in Kim show these side panels on the left and right sides of the constricted convection plate and formed from bending Kim's shield cover 140. Tr. (Smith-Gillespie) at 942:7-20; RDX-0007 at 35-36. MRI's argument in reply that these panels are not "adjacent to" the posterior display surface if they are not affixed directly to it (CRB at 62) is incorrect. "Adjacent" does not require the two objects to be affixed.[76]

The evidence also shows that these side panels "defin[e] a constricted convection channel having an entrance and an exit." As discussed *supra*, Kim discloses a constricted convection channel. There is no dispute that the cooling fan 200, when operating as an inlet fan, provides an entrance to the space behind the posterior display surface or that this space has at least one exit. *See* Tr. (Credelle) at 1217:22-1218:1; *id.* at 1217:5-21 ("I don't dispute that in this cross-section those indicated areas are exits, not to say that they are the only exits"); CDX-0011 at 21. MRI's

[76] Mr. Credelle acknowledged that these tabs are used to "attach the shield cover to the sides of the backlight chassis." Tr. (Credelle) at 1183:16-18.

argument that these panels do not "define" a constricted convection channel because some air flows towards these panels (CIB at 137) ignores their role in enclosing the space between the constricted convection plate and posterior display surface, including the vertical airflow path. *See* Tr. (Smith-Gillespie) at 942:16-20, 1067:16-24; RDX-0007 at 35-36; RIB at 81-82.

Accordingly, Respondents have shown by clear and convincing evidence that Kim discloses two side panels placed adjacent to the constricted convection plate and the posterior display surface, defining a constricted convection channel having an entrance and an exit.

**iv. Claim element [1e]: a fan placed to draw air from outside of the housing through the constricted convection channel.**

There is no dispute that Kim discloses a fan placed to draw air from outside of the housing through the constricted convection channel. *See* CIB at 135-37; CRB at 59-62 (not disputing that Kim discloses this limitation). This term was construed to have its plain and ordinary meaning. Order No. 13 at 29. As Mr. Smith-Gillespie explained, Kim discloses a cooling fan unit 200 which draws air from outside of the display into the space between the shield cover and the rear of the backlight assembly. Tr. (Smith-Gillespie) at 944:5-12; Kim at 5:16-18, 5:42-45. This cooling fan unit is therefore placed to draw air from outside of the housing through the constricted convection channel. Accordingly, Respondents have shown by clear and convincing evidence that Kim discloses a fan placed to draw air from outside of the housing through the constricted convection channel.

***

For the reasons set forth above, Respondents have proven by clear and convincing evidence that Kim anticipates claim 1 of the '595 patent.

### 2. Claim 4

Respondents contend that claim 4 of the '595 patent is rendered obvious by the combination of Kim and Hong. RIB at 83-86. MRI argues that this combination would not render claim 4 obvious because Kim fails to teach limitation [4g] and because a person of ordinary skill in the art would not be motivated to combine Kim with Hong. CIB at 137-39; CRB at 62-63. For the reasons set forth below, Respondents have proven by clear and convincing evidence that claim 4 is rendered obvious by the combination of Kim and Hong.

#### a. Claim element [4a]: A liquid crystal display (LCD) comprising:

To the extent that the preamble of claim 4 is limiting, there is no dispute that Kim discloses a liquid crystal display. CIB at 137-39; CRB at 62-63 (not disputing that Kim discloses this limitation). As Mr. Smith-Gillespie testified, Kim discloses a display apparatus with a liquid crystal display panel. Tr. (Smith-Gillespie) at 944:24-945:11; Kim at 4:1-8. Accordingly, Respondents have shown by clear and convincing evidence that Kim discloses a liquid crystal display.

#### b. Claim element [4b]: a liquid crystal stack;

There is no dispute that Kim discloses a liquid crystal stack. CIB at 137-39; CRB at 62-63 (not disputing that Kim discloses this limitation). As Mr. Smith-Gillespie testified, Kim discloses a display apparatus with a liquid crystal display panel. Tr. (Smith-Gillespie) at 944:24-945:11; Kim at 4:1-8. He further explained that it is well-known that a liquid crystal display panel is a stack of materials, the liquid crystal stack, which comprise several sheets of glass spaced apart in which liquid crystal fluid is encased, along with polarizers. Tr. (Smith-Gillespie) at 945:3-945:11. Accordingly, Respondents have shown by clear and convincing evidence that Kim discloses a liquid crystal stack.

**c. Claim element [4c]: a backlight assembly behind the liquid crystal stack and comprising:**

There is no dispute that Kim discloses a backlight assembly behind the liquid crystal stack. CIB at 137-39; CRB at 62-63 (not disputing that Kim discloses this limitation). As Mr. Smith-Gillespie testified, Kim discloses a backlight unit 130 which is located behind the liquid crystal stack. Tr. (Smith-Gillespie) at 944:17-22; Kim at 4:1-8, 4:33-35; *see also* Kim at Fig. 2. Accordingly, Respondents have shown by clear and convincing evidence that Kim discloses a backlight assembly behind the liquid crystal stack.

**d. Claim element [4d]: a metal core printed circuit board (PCB) having front and back sides;**

Kim does not disclose use of a metal core printed circuit board in its backlight assembly, and Respondents rely on Hong's disclosure of a metal core printed circuit board for this limitation. RIB at 84-85; Tr. (Smith-Gillespie) at 946:1-7. There is no dispute that Hong's display discloses that its printed circuit board may be a metal core printed circuit board "which may effectively absorb and transfer heat produced at the LED[.]" Hong ¶ [0029], Fig. 3; Tr. (Credelle) at 1223:17-19. MRI argues that a person of ordinary skill in the art would not have been motivated to combine Hong with Kim to meet this limitation. CIB at 137-39.

As Mr. Smith-Gillespie testified, metal core printed circuit boards were known in the art before 2008 for controlling the heat building in power electronics. Tr. (Smith-Gillespie) at 946:8-12. Mr. Credelle also admitted on cross-examination that metal core printed circuit boards were used in some commercial LCD displays by 2008. Tr. (Credelle) at 1197:13-16. Mr. Smith-Gillespie opined that metal core printed circuit boards have the advantage of reducing the thermal resistance of the pathway from the LED, which provides a sink for heat to allow the LEDs to operate more efficiently and with a long life. Tr. (Smith-Gillespie) at 948:9-21. He

testified that when an LED operates at lower temperature, less power is needed for the same power, allowing higher brightness. *Id.* at 948:22-949:3. And he testified that in his opinion, a person of ordinary skill in the art would have been motivated to modify Kim to incorporate a metal core printed circuit board because they would have understood there would be power savings and that using a metal core printed circuit board would allow the display to be driven at higher luminance levels without overheating due to its thermal efficiency. *Id.* at 950:13-25. He testified that this would have been a straightforward replacement for a person of ordinary skill in the art. *Id.* at 951:1-15.

MRI argues that because Hong's system is fundamentally different from Kim's, a person of ordinary skill in the art would not have been motivated to modify Kim with Hong's metal core printed circuit board. CIB at 138-39. Mr. Credelle testified that Kim's system is a convective cooling system, while Hong's is a conductive cooling system that uses metal core PCBs and heat sinks to conduct heat away from the backlight. Tr. (Credelle) at 1181:1-14. He further explained that in his opinion, adding a metal core printed circuit board would not be necessary for Kim, because the system already works, and adding a metal core would increase costs. *Id.* at 1181:15-1182:5. MRI also argues that Mr. Smith-Gillespie has not explained why higher luminance would be necessary for Kim's indoor display for personal use. CRB at 63.

The evidence of record shows, clearly and convincingly, that one of ordinary skill in the art would have reason to modify Kim's system to have a metal core printed circuit board. Both experts agreed that metal core printed circuit boards were a known option as of the time of the invention of the '595 patent. Tr. (Smith-Gillespie) at 946:8-12; Tr. (Credelle) at 1197:13-16. Mr. Smith-Gillespie persuasively explained the benefits of a metal core printed circuit board (MCPCB) for cooling a system, why a person of ordinary skill in the art would have been

motivated to make this modification, and that it would have been straightforward (and therefore it would have a reasonable expectation of success). Tr. (Smith-Gillespie) at 950:13-951:15. The Hong reference itself discloses the benefits of using an MCPCB to "effectively absorb and transfer heat produced at the LED 124." Hong ¶ [0029].[77] MRI's arguments that a person of ordinary skill would not have reason to make this modification are unpersuasive. Although Hong and Kim use different methods of cooling, Mr. Credelle admitted that a MCPCB has benefits, "depending on the design." Tr. (Credelle) at 1223:23-1224:4; *see also id.* at 1197:6-14 (metal core PCBs commercially used in LCD displays by 2008). Further, Mr. Credelle's testimony about increased cost does not obviate the reason to combine established by the benefits of a MCPCB. As held by the Federal Circuit, "a given course of action often has simultaneous advantages and disadvantages, and this does not necessarily obviate motivation to combine." *Medichem, S.A. v. Rolabo, S.L.*, 437 F.3d 1157, 1165 (Fed. Cir. 2006).

For these reasons, Respondents have shown by clear and convincing evidence that a person of skill in the art would have reason to modify Kim to include a metal core printed circuit board, with a reasonable expectation of success.

**e. Claim element 4[e]: a plurality of LEDs mounted on the front side of the PCB;**

There is no dispute that Kim discloses a backlight assembly comprising a plurality of LEDs mounted on the front side of the PCB. CIB at 137-39; CRB at 62-63 (not disputing that Kim discloses this limitation). As Mr. Smith-Gillespie testified, Kim discloses a backlight unit 130 which has a plurality of LEDs mounted on the front side of a printed circuit board. Tr.

[77] Kim's backlight uses LEDs as a light source. Kim at 4:33-35. And Kim itself discloses that there is a need to emit heat generated by LEDs efficiently. Kim at 1:37-41. Hong also discloses that LEDs may require a substantial amount of power and generate substantial heat. Hong at [0010].

(Smith-Gillespie) at 946:13-946:25; Kim at 5:35-38 (describing "LEDs widely distributed on the plane of the backlight unit 130 and the circuit board 133"). Accordingly, Respondents have shown by clear and convincing evidence that Kim discloses a backlight assembly comprising a plurality of LEDs mounted on the front side of the PCB.

**f. Claim element [4f]: a posterior surface on the rear side of the PCB;**

There is no dispute that Kim discloses a backlight assembly comprising a posterior surface on the rear side of the PCB. CIB at 137-39; CRB at 62-63 (not disputing that Kim discloses this limitation). Mr. Smith-Gillespie testified that the rear side of the backlight unit is a posterior surface on the rear side of the PCB. Tr. (Smith-Gillespie) at 947:1-5; *see also* Kim at Fig. 5. Accordingly, Respondents have shown by clear and convincing evidence that Kim discloses a backlight assembly comprising a plurality of LEDs mounted on the front side of the PCB.

**g. Claim element [4g]: a constricted convection plate placed behind the posterior surface of the PCB, defining a constricted convection channel having an entrance and an exit; and**

The parties dispute whether Kim discloses a constricted convection plate placed behind the posterior surface of the PCB, defining a constricted convection channel having an entrance and an exit. The parties' arguments regarding this limitation are identical to the reasons raised with respect to limitations [1b] and [1d] of claim 1, and they do not raise any unique arguments for claim 4. *See* RIB at 86; CIB at 137. For the same reasons discussed above, Respondents have shown by clear and convincing evidence that Kim discloses a constricted convection plate placed behind the posterior surface of the PCB, defining a constricted convection channel having an entrance and an exit as those terms have been construed.

**h. Claim element [4h]: a fan positioned to draw air through the constricted convection channel.**

There is no dispute that Kim discloses a fan positioned to draw air through the constricted convection channel. CIB at 137-39; CRB at 62-63 (not disputing that Kim discloses this limitation). This term was construed to have its plain and ordinary meaning. Order No. 13 at 29. Respondents and Mr. Smith-Gillespie pointed to the same fan they identified for limitation [1e] of claim 1 of the '595 patent. RIB at 86; Tr. (Smith-Gillespie) at 947:6-14. As discussed above, *supra*, Kim discloses a cooling fan unit 200 which draws air from outside of the display into the space between the shield cover and the rear of the backlight assembly, and thus through the constricted convection channel. Tr. (Smith-Gillespie) at 944:5-12; Kim at 5:16-18, 5:42-45. Accordingly, Respondents have shown by clear and convincing evidence that Kim discloses a fan positioned to draw air through the constricted convection channel.

***

As set forth above, the evidence shows, clearly and convincingly, that Kim contains all limitations of claim 4 of the '595 patent except for the inclusion of a metal core printed circuit board. With respect to that element, Respondents have proven by clear and convincing evidence that a person of ordinary skill in the art would have reason to modify Kim to include a metal core printed circuit board with a reasonable expectation of success. Further, as discussed in Part VIII.G, the evidence of secondary considerations presented is entitled to little weight. Accordingly, Respondents have proven by clear and convincing evidence that claim 4 of the '595 patent is obvious in view of Kim and Hong.

### 3. Claim 7

#### a. "The LCD from claim 4 wherein: the fan is placed near the exit of the constricted convection channel."

Respondents contend that claim 7 of the '595 patent is rendered obvious by the combination of Kim and Hong because Kim teaches "the fan is placed near the exit of the constricted convection channel." RIB at 87; Tr. (Smith-Credelle) at 952:3-19; Kim at Fig. 5. MRI agrees that air may exit "at the bottom, near the fan" but argues that such air is not traveling through "a channel." CIB at 139. Respondents argue that MRI waived this argument by not including it in its prehearing brief. *See* RRB at 50.

The undersigned agrees with Respondents that MRI waived this argument. *See* RRB at 50. MRI's prehearing brief included no arguments for this term based on the definition of a "channel" (*see* CPHB at 154) and, as discussed above, the undersigned has rejected MRI's argument that there is no constricted convection channel in Kim. MRI has identified no other arguments disputing the disclosure of this limitation in Kim. *See* CIB at 139, CRB at 64.[78] The undersigned is persuaded by Respondents' arguments that this limitation is clearly and convincingly disclosed.

Accordingly, and for the reasons discussed above regarding claim 4, Respondents have proven by clear and convincing evidence that claim 7 of the '595 patent is obvious in view of Kim and Hong.

[78] In addition, Respondents have shown that Kim discloses that the intake and discharge directions of the air may be changed such that the fan is generally acting as an exhaust fan. *See* RIB at 87; Kim at 7:62-65; Tr. (Smith-Gillespie) at 1069:8-16 (Kim discloses that fan can be operated in reverse); *id.* at 1112:7-16 (fan turning in opposite direction would be an "exhaust fan"); Kim at 5:42-46, 7:62-65, 8:16-21.

### 4. Claim 8

#### a. "The LCD from claim 4 further comprising: a plurality of access apertures through the constricted convection plate."

Respondents contend that claim 8 of the '595 patent is rendered obvious by the combination of Kim, Hong, and Takahashi (RX-1356). RIB at 87-89. In addition to its arguments regarding claim 4, MRI also argues that this combination would not render claim 8 obvious because a person of ordinary skill in the art would not have been motivated to combine Takahashi with Kim and Hong. CIB at 139-40. For the reasons set forth below, Respondents have proven by clear and convincing evidence that one of ordinary skill in the art would have reason to combine Kim, Hong, and Takahashi to obtain the added limitation of claim 8, with a reasonable expectation of success.

Respondents assert that a person of ordinary skill in the art would have understood Kim's shield cover to include access apertures, including through the removable fan support. RIB at 87; Tr. (Smith-Gillespie) at 953:6-17. In particular, Respondents identify an asserted aperture through removable fan support 141 and argue that there could be multiple (i.e., the required "plurality") of such apertures based on Kim's disclosure of using multiple fans. *See* RIB at 87-88. Respondents also argue that even if Kim does not disclose these access apertures, Takahashi discloses them. As Mr. Smith-Gillespie testified, Takahashi discloses an electronic display with a cooling system. Tr. (Smith-Gillespie) at 953:25-954:4. Mr. Smith-Gillespie testified that Takahashi discloses the use of through-holes which normally have an air leak prevention part which may be removed without removing the plate. *Id.* at 954:7-20; Takahashi ¶ [0007]. Respondents argue that a person of ordinary skill in the art would have been motivated to modify the combination of Kim and Hong to add access apertures to allow access to hardware without removing the shield cover. RIB at 89; Tr. (Smith-Gillespie) at 954:24-955:14. Mr. Smith-

Gillespie testified that a person of ordinary skill in the art would have had a reasonable expectation of success in making this modification. Tr. (Smith-Gillespie) at 955:15-21.

MRI argues that Respondents' arguments for including multiple fans based on Kim is unpersuasive. *See* CRB at 64. MRI does not contest that Takahashi discloses a plurality of access apertures, but instead argues that a person of ordinary skill in the art would not have been motivated to modify Kim with Takahashi's air leak prevention parts. CIB at 139-40. In particular, MRI argues that because the flow of air through air slits is crucial to cooling, plugging those holes would destroy the basic objective of Kim. *Id.* at 140; CRB at 64-65. MRI cites no testimony for this argument because Mr. Credelle provided no opinion on this issue. Mr. Credelle did opine that openings would be unnecessary in Kim because access to the circuit board in Kim can be done by removing the shield cover. CIB at 140 (citing Tr. (Credelle) at 1185:2-24).

Respondents have proven by clear and convincing evidence that one of skill in the art would have reason to combine Kim, Hong, and Takahashi to obtain the claimed invention. The undersigned is unpersuaded that Kim alone discloses this plurality of access apertures by clear and convincing evidence. Among other things, Respondents cite no expert testimony that the use of multiple fans would involve multiple access apertures. *See* RIB at 88 (citing only Tr. (Credelle) at 1215:9-19); CRB at 139-140.[79] But the undersigned is persuaded that a person of ordinary skill in the art would have reason to combine Takahashi's through-holes and air leak prevention parts with Kim and had a reasonable expectation of success. Mr. Smith-Gillespie's testimony that these through-holes and air leak prevention parts would have improved Kim by

[79] Respondents' own expert, Mr. Smith-Gillepsie, did not make this argument. *See* Tr. (Smith-Gillespie) at 953:6-17.

allowing access to hardware without having to remove the shield cover, and that this modification would be "straightforward" is clear and convincing. Tr. (Smith-Gillespie) at 954:24-955:14.[80] Takahashi itself explains these benefits: allowing maintenance or inspection to be performed without removing the plate. Takahashi ¶ [0007]. Mr. Credelle's opinion that one would not have reason to make this modification because one could simply access the backlight by removing Kim's shield cover is unpersuasive because the purpose of the through-holes is to allow access for maintenance or inspection *without* needing to remove the shield cover.

Further, as discussed *infra* (Part VIII.G), the evidence of secondary considerations presented is entitled to little weight. Accordingly, the evidence clearly and convincingly shows that claim 8 of the '595 patent is rendered obvious by Kim, Hong, and Takahashi.

### C. The '322 Patent

Respondents contend that claims 3, 4, 5, 8, 9, 12, and 13 of the '322 patent are invalid as anticipated and/or obvious, for lack of written description, and for improper inventorship. Respondents contend that Kimura anticipates and/or renders obvious claims 9, 12, and 13 of the '322 patent. RIB at 96-103. Respondents also contend that claims 9, 12, and 13 are invalid for lack of written description. *Id.* at 103-04. In addition, Respondents assert that the following prior art references render claims 3, 4, 5, and 8 obvious:

- Claim 3: Kim and Tachikawa
- Claim 4: Kim and Hong
- Claim 5: Kim, Hong, and Tachikawa
- Claim 8: Kim, Hong, and Takahashi

[80] Mr. Smith-Gillespie also testified that there would be some electronics between the rear of the PCB and the shield cover in Kim. *See* Tr. (Smith-Gillespie) at 1061:18-1062:6, 1062:19-22.

RIB at 89-96.

For the reasons set forth below, Respondents have proven that claims 3, 4, 5, and 8 of the '322 patent are invalid, but have failed to prove that claims 9, 12, and 13 are invalid as anticipated or obvious. The evidence of record shows that claims 9, 12, and 13 of the '322 patent are invalid for lack of written description. In addition, Respondents have not shown invalidity based on improper inventorship, as discussed in Part VIII.H *infra*.

**1. Claim 3**

Respondents contend that claim 3 of the '322 patent, which depends from claim 1, is rendered invalid in view of Kim and Tachikawa. RIB at 95-96. MRI argues that Kim does not teach limitation [1c], that a person of ordinary skill in the art would not be motivated to combine Kim and Tachikawa to meet limitation [1c], and that the combination of Kim and Tachikawa do not teach the additional limitation of dependent claim 3. CIB at 140-142. For the reasons set forth below, Respondents have proven by clear and convincing evidence that claim 3 would have been obvious in view of Kim and Tachikawa.

**a. Claim element [1a]: A system for cooling an electronic display having a posterior display surface and contained within a housing, the system comprising:**

This limitation is almost identical to the preamble of claim 1 of the '595 patent, limitation [1a]. Tr. (Smith-Gillespie) at 961:6-12; RDX-0007 at 63. It was undisputed for purposes of that claim that Kim disclosed a system for cooling an electronic display having a posterior display surface and contained within a housing. *See* discussion above. For the same reasons discussed there, Respondents have shown by clear and convincing evidence that Kim discloses a system for cooling an electronic display having a posterior display surface and contained within a housing.

**b. Claim element [1b]: a constricted convection plate placed posterior to the posterior display surface covering the majority of the posterior display surface;**

This limitation is similar to limitation [1b] of the '595 patent, but also requires the constricted convection plate to cover the majority of the posterior display surface to the preamble of claim 1 of the '595 patent, element [1a]. Tr. (Smith-Gillespie) at 961:6-12; RDX-0007 at 63. As discussed above, Respondents have shown that Kim discloses a constricted convection plate. MRI does not dispute that the alleged constricted convection plate covers the majority of the posterior display surface. CIB at 140-42; CRB at 67. Mr. Smith-Gillespie testified that the constricted convection panel, the shield cover, covers the majority of the posterior display surface as shown in Figure 2. Tr. (Smith-Gillespie) at 961:19-962:8; Kim at Fig. 2. Accordingly, Respondents have shown by clear and convincing evidence that Kim discloses a constricted convection plate placed posterior to the posterior display surface covering the majority of the posterior display surface.

**c. Claim element [1c]: at least one bracket which connects the posterior display surface with the constricted convection plate; and**

The parties dispute whether Kim alone or the combination of Kim and Tachikawa (RX-1353) discloses this limitation of claim 1 (from which claim 3 depends). CIB at 141-42. For the reasons set forth below, Respondents have shown by clear and convincing evidence that Kim discloses this limitation. Respondents have also shown by clear and convincing evidence that a person of ordinary skill in the art would have been motivated to modify Kim to include brackets, such as those in Tachikawa, with a reasonable expectation of success.

Respondents argue that Kim discloses the use of a pair of brackets to connect the constricted convection plate with the posterior display surface. RIB at 91-92.[81] Mr. Smith-Gillespie testified that the brackets were formed on the left and right sides of the shield cover. Tr. (Smith-Gillespie) at 957:16-22; RDX-0007 at 59:

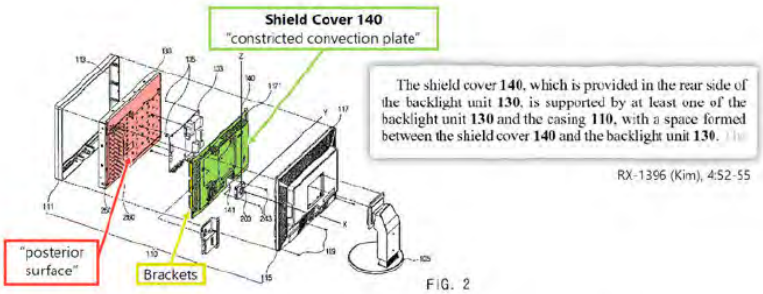


He testified that in his opinion, the way the shield cover would attach to the posterior surface would be with screws to attach to the frame. Tr. (Smith-Gillespie) at 957:23-958:12. Respondents argue that even if Kim did not disclose the use of brackets, it would have been obvious to a person of ordinary skill in the art to use brackets to connect the posterior display surface and constricted convection plate. RIB at 93. Mr. Smith-Gillespie testified that brackets were commonly used in electronic displays as of 2008. *Id.* at 958:13-20. And Respondents pointed to Tachikawa, a reference which uses brackets to connect a plasma television to a cabinet, as evidence that this would have been obvious. RIB at 93-94; Tr. (Smith-Gillespie) at 959:12-960:12; Tachikawa ¶ [0019]. Mr. Smith-Gillespie explained that Tachikawa's disclosure of brackets would have been used to support the shield cover in order to prevent the shield casing

[81] RIB at 91-92 discusses the disclosure by Kim of "at least one bracket which connects the posterior surface with the constricted convection plate," in claim 5 of the '322 patent. Claim element [1c] of the '322 patent includes the substantially similar limitation "at least one bracket which connects the posterior display surface with the constricted convection plate." Both Respondents and MRI treat these limitations in the same manner. *See* RIB at 95; CIB at 140-142.

from warping or flexing, and that it would be an easy approach to implement. Tr. (Smith-Gillespie) at 960:13-961:5.

MRI argues that Kim does not disclose the use of brackets to connect to the posterior surface because the two alleged brackets connect to the sides of the backlight unit, not the posterior display surface. CIB at 141; Tr. (Smith-Gillespie) at 1058:12-24; Tr. (Credelle) 1183:13-23. MRI also argues that a person of ordinary skill in the art would not have been motivated to modify Kim and combine it with Tachikawa. CIB at 141. Mr. Credelle testified that Kim's tab attachment system is already effective, and therefore a person of ordinary skill in the art would not need to use Tachikawa's bracket. Tr. (Credelle) at 1183:13-1184:3. MRI also argues, without citing evidence, that using the brackets from Tachikawa would have interfered with Kim and destroyed its principle of operation. CIB at 141-42. MRI admits that brackets were commonly used in assembling electronic displays in its reply brief. CRB at 66-67.

The undersigned finds that the evidence shows, clearly and convincingly, that Kim discloses this limitation. MRI does not dispute that Kim's side-tabs are "brackets," but only argues that these do not "connect[] the posterior display surface with the constricted convection plate" because they attach to the sides of the backlight unit. CIB at 141 ("Respondents wrongly contend that tabs on the side of the alleged constricted convection plate . . . are 'brackets' that connect to the posterior surface, when, in fact, they connect to the sides of the backlight unit 130."); *see also* RIB at 92; Tr. (Smith-Gillespie) at 958:13-20; Tr. (Credelle) at 386:6-15. The undersigned agrees with Respondents that this limitation does not require that the bracket be directly attached to the posterior display surface and that securing the constricted convection plate at the side of the posterior display surface, in the manner shown by Kim, meets the

"connects" requirement of this limitation, properly construed. *See also* Part VIII.B.1.b.iii (showing side panels of Kim).[82]

In addition, the evidence shows that one of ordinary skill in the art would have reason to modify Kim to use Tachikawa's brackets to connect the posterior display surface with the constricted convection plate. Mr. Smith-Gillespie testified that one of ordinary skill would have reason to make this modification to support the shield casing "to keep it from warping or flexing in the housing." Tr. (Smith-Gillespie) at 960:13-22. Mr. Smith-Gillespie further testified that this would be "an easy-to-implement approach." *Id.* at 960:16-961:5; *see also* RIB at 93-94.

MRI's contrary arguments are unpersuasive. MRI has provided attorney argument that brackets would have destroyed its principle of operation. See CIB at 141-142. This attorney argument does not persuasively controvert the unrebutted testimony of Mr. Smith-Gillespie that modifying Kim to use Tachikawa's brackets would have been an effective way to attach the pieces. *See* Tr. (Smith-Gillespie) at 960:13-961:5. Mr. Credelle's arguments that there would be no need to implement the brackets taught by Tachikawa (Tr. (Credelle) at 1183:18-1184:11) is not persuasive in view of Mr. Smith-Gillespie's testimony that such brackets would be useful for heavier displays. *See* Tr. (Smith-Gillespie) at 960:13-22.

---

[82] The claim language at issue requires a bracket "which connects the posterior display surface with the constricted convection plate." Permitting intermediate connection aids is consistent with the plain and ordinary meaning of "connect." For example, a leash could "connect" a person and that person's pet even if the leash is directly attached to the pet's collar, rather than to the pet itself. Moreover, the claim language itself contemplates that two structures can be connected, within the meaning of the patent, without direct attachment. That is, claim 1 of the '322 patent contemplates that the posterior display surface and the constricted convection plate will be connected with each other, even though there is an intervening structure. *See* '322 patent, cl. 1 (claiming "at least one bracket which connects the posterior display surface with the constricted convection plate"). In addition, the specification indicates that the purpose of the connection between the posterior display surface and the constricted convection plate is to provide a specific air channel between them. *See* '322 patent at 4:40-51. This purpose can be achieved regardless of whether the claimed bracket is directly attached to the posterior display surface and the constricted convection plate, or additional connection aids are used.

Accordingly, Respondents have shown by clear and convincing evidence that a person of ordinary skill in the art would have reason to modify Kim to include at least one bracket which connects the posterior display surface with the constricted convection plate, and that this modification would have had a reasonable expectation of success.

**d. Claim element [1d]: a fan placed to draw ambient air between the constricted convection plate and the rear posterior.**

This limitation is similar to limitation [1e] of claim 1 of the '595 patent. Tr. (Smith-Gillespie) at 961:6-12; RDX-0007 at 63. There is no dispute that this limitation is disclosed by Kim. *See* CIB at 140-42; CRB at 67 (not disputing that Kim discloses this limitation). For the same reasons discussed above, Respondents have shown by clear and convincing evidence that Kim discloses a fan placed to draw ambient air between the constricted convection plate and the rear posterior.

**e. Claim 3**

(i) *"The cooling system from claim 1 wherein: the constricted convection plate is substantially parallel to the posterior display surface."*

Respondents have proven by clear and convincing evidence that the constricted convection plate of Kim is substantially parallel to the posterior display surface. Although MRI nominally disputes this limitation, it only asserts a failure of proof as to this limitation, and cites no evidence, argument, or legal authority to support its argument. CIB at 142. The only record evidence clearly and convincingly shows that the constricted convection plate of Kim is substantially parallel to the posterior display surface. Tr. (Smith-Gillespie) at 956:24-957:1; RDX-0007 at 56; Kim at Fig. 5.

***

For the reasons set forth above, Respondents have shown that Kim alone and Kim in combination with Tachikawa disclose all elements of claim 3. Respondents have shown by clear and convincing evidence that a person of ordinary skill in the art would have reason to modify Kim to include the brackets of Tachikawa and had a reasonable expectation of success in doing so. Further, as discussed *infra* (Part VIII.G) ,the evidence of secondary considerations presented is entitled to little weight. Accordingly, the evidence of record clearly and convincingly shows that claim 3 of the '322 is invalid.

**2. Claim 4**

Respondents contend that claim 4 of the '322 patent is rendered obvious by the combination of Kim and Hong for "similar reasons" that Kim and Hong invalidate claim 4 of the '595 patent. RIB at 89-90. MRI, too, repeats its arguments made regarding claim 4 of the '595 patent. CIB at 142. For the reasons set forth below, Respondents have proven by clear and convincing evidence that claim 4 of the '322 patent is rendered obvious by Kim and Hong (as well as by Kim alone).

**a. Claim element [4a]: A liquid crystal display (LCD) comprising:**

This limitation is identical to limitation [4a] of claim 4 of the '595 patent. Tr. (Smith-Gillespie) at 955:22-956:11; RDX-0007 at 55. For the same reasons explained above, MRI has shown by clear and convincing evidence that Kim discloses a liquid crystal display.

**b. Claim element [4b]: a liquid crystal stack;**

This limitation is identical to limitation [4b] of claim 4 of the '595 patent. Tr. (Smith-Gillespie) at 955:22-956:11; RDX-0007 at 55. For the same reasons explained above, MRI has shown by clear and convincing evidence that Kim discloses a liquid crystal stack.

**c. Claim element [4c]: a backlight assembly behind the liquid crystal stack and comprising:**

This limitation is identical to limitation [4c] of claim 4 of the '595 patent. Tr. (Smith-Gillespie) at 955:22-956:11; RDX-0007 at 55. For the same reasons explained above, MRI has shown by clear and convincing evidence that Kim discloses a backlight assembly behind the liquid crystal stack.

**d. Claim element [4d]: a printed circuit board (PCB) having front and back sides;**

This limitation is similar to limitation [4d] of claim 4 of the '595 patent. Tr. (Smith-Gillespie) at 955:22-956:11; RDX-0007 at 55. Unlike that limitation, this limitation does not require a "metal core" printed circuit board. There is no dispute that Kim discloses a printed circuit board. Tr. (Credelle) at 1213:21-23; Kim at 4:38-41.[83] For the same reasons explained above, MRI has shown by clear and convincing evidence that the combination of Kim and Hong discloses a printed circuit board (PCB) having front and back sides, and that a person of ordinary skill in the art would have reason to combine Kim and Hong with a reasonable expectation of success.

**e. Claim element [4e]: a plurality of LEDs mounted on the front side of the PCB;**

This limitation is identical to limitation [4e] of claim 4 of the '595 patent. Tr. (Smith-Gillespie) at 955:22-956:11; RDX-0007 at 55. For the same reasons explained above, MRI has shown by clear and convincing evidence that Kim discloses a plurality of LEDs mounted on the front side of the PCB.

[83] Because Kim alone discloses this limitation, and this was the only limitation of claim 4 for which Hong was relied upon, it appears that Kim alone anticipates or renders obvious claim 4 of the '322 patent.

**f. Claim element [4f]: a posterior surface on the rear side of the PCB;**

This limitation is identical to limitation [4f] of claim 4 of the '595 patent. Tr. (Smith-Gillespie) at 955:22-956:11; RDX-0007 at 55. For the same reasons explained above, MRI has shown by clear and convincing evidence that Kim discloses a posterior surface on the rear side of the PCB.

**g. Claim element [4g]: a constricted convection plate placed behind and substantially parallel with the posterior surface of the PCB; and**

This limitation is similar to limitation [4g] of claim 4 of the '595 patent. Tr. (Smith-Gillespie) at 955:22-956:11; RDX-0007 at 55. This limitation requires a constricted convection plate, like that limitation. As explained above, MRI has shown by clear and convincing evidence that Kim discloses a constricted convection plate. Although MRI nominally disputes that the constricted convection plate is substantially parallel with the posterior surface of the PCB , it only asserts a failure of proof as to this limitation, and cites no evidence, argument, or legal authority to support its argument. CIB at 142. The only record evidence shows that the constricted convection plate is substantially parallel with the posterior surface of the printed circuit board. As Mr. Smith-Gillespie testified, Figure 5 of the Kim shows that the constricted convection plate is oriented parallel to the posterior surface of the printed circuit board. Tr. (Smith-Gillespie) at 956:24-957:1; RDX-0007 at 56; Kim at Fig. 5. Accordingly, MRI has shown by clear and convincing evidence that Kim discloses a constricted convection plate placed behind and substantially parallel with the posterior surface of the PCB.

**h. Claim element [4h]: a fan positioned to draw air between the constricted convection plate and the posterior surface.**

This limitation is similar to limitation [4h] of claim 4 of the '595 patent. Tr. (Smith-Gillespie) at 955:22-956:11; RDX-0007 at 55. No party has identified any relevant differences between these two limitations. For the same reasons explained above, MRI has shown by clear and convincing evidence that Kim discloses a fan positioned to draw air between the constricted convection plate and the posterior surface.

***

For the same reasons explained above, Respondents have proven by clear and convincing evidence that a person of ordinary skill in the art would have been motivated to combine Kim and Hong with a reasonable expectation of success. Further, for the same reasons discussed above, the evidence of secondary considerations of non-obviousness presented is entitled to little weight and does not establish the non-obviousness of claim 4.

Accordingly, Respondents have proven by clear and convincing evidence that claim 4 of the '322 patent is rendered obvious by the combination of Kim and Hong.

**3. Claim 5**

**a. "The LCD from claim 4 further comprising: at least one bracket which connects the posterior surface with the constricted convection plate."**

Respondents contend that claim 5 of the '322 patent is rendered obvious by the combination of Kim, Hong, and Tachikawa. RIB at 91-94. In addition to its arguments made regarding claim 4 of the '322 patent, MRI argues that the combination of Kim and Tachikawa fail to teach the additional limitation of claim 5, and that a person of ordinary skill in the art would not combine Kim and Tachikawa. CIB at 142. The arguments raised here are identical to those raised for limitation [1c] of claim 3 of the '322 patent. For the same reasons discussed

above, the evidence clearly and convincingly shows that Kim discloses this claim element and, to the extent it does not, a person of ordinary skill in the art would have reason to modify Kim to include a bracket (such as that of Tachikawa) to connect the posterior surface with the constricted convection plate, with a reasonable expectation of success.

***

For the foregoing reasons, and because as discussed *supra* the secondary considerations of non-obviousness do not weigh significantly against an obviousness finding, Respondents have proven by clear and convincing evidence that claim 5 of the ’322 patent is rendered obvious by the combination of Kim and Hong, as well as by the combination of Kim, Hong, and Tachikawa.

**4. Claim 8**

**a. “The LCD from claim 4 further comprising: a plurality of access apertures on the constricted convection plate.”**

Respondents contend that claim 8 of the ’322 patent is rendered obvious by the combination of Kim, Hong, and Takahashi for the same reasons that claim 8 of the ’595 patent is rendered obvious. RIB at 96. In addition to its arguments made regarding claim 4 of the ’322 patent, MRI argues that the additional limitation is not obvious for the same reasons that it contends claim 8 of the ’595 patent is not rendered obvious. CIB at 142-43. This limitation is identical to the limitation of claim 8 of the ’595 patent, and no party makes any new arguments for this limitation.

For the same reasons discussed *supra*, Respondents have proven by clear and convincing evidence that claim 8 of the ’322 patent is obvious over Kim, Hong, and Takahashi.

**5. Claim 9**

Respondents contend that claim 9 of the ’322 patent is anticipated and/or rendered obvious by Kimura. RIB at 96-101. MRI argues that Kimura fails to teach or render obvious

limitations [9c] and [9d]. CIB at 144-47. For the reasons set forth below, Respondents have failed to show by clear and convincing evidence that claim 9 of the '322 patent is anticipated or rendered obvious by Kimura.

**a. Claim element [9a]: A system for cooling an electronic display comprising:**

To the extent that the preamble of claim 9 is limiting, there is no dispute that Kimura discloses a system for cooling an electronic display. *See* CIB at 143-47; CRB at 68-71 (not disputing that Kimura discloses this limitation). As Mr. Smith-Gillespie explained, Kimura discloses a system for cooling an electronic display. Tr. (Smith-Gillespie) at 963:4-964:12; Kimura ¶ [0003]. Mr. Credelle also admitted that Kimura discloses a system for cooling an electronic display. Tr. (Credelle) at 1220:12-15. Accordingly, Respondents have proven by clear and convincing evidence that Kimura discloses a system for cooling an electronic display.

**b. Claim element [9b]: an electronic display comprising a front display surface and a posterior surface where no electronics are mounted to the posterior surface of the electronic display;**

There is no dispute that Kimura discloses an electronic display comprising a front display surface and a posterior surface where no electronics are mounted to the posterior surface of the electronic display. *See* CIB at 143-47; CRB at 68-71 (not disputing that Kimura discloses this limitation). "Posterior surface of the electronic display" was construed to mean "rear-facing surface of the display assembly." Order No. 13 at 42. As Mr. Smith-Gillespie explained, none of Kimura's figures discloses any electronics mounted to the posterior surface of the electronic display. Kimura discloses a system for cooling an electronic display. Tr. (Smith-Gillespie) at 963:4-964:12; *see also* Kimura at Fig. 10. Mr. Credelle admitted that had had no opinion that Kimura did not disclose an electronic display comprising a front display surface and a posterior surface where no electronics are mounted to the posterior surface of the electronic display. Tr.

(Credelle) at 1220:22-1221:4. Accordingly, Respondents have proven by clear and convincing evidence that Kimura discloses an electronic display comprising a front display surface and a posterior surface where no electronics are mounted to the posterior surface of the electronic display.

**c. Claim element [9c]: a constricted convection plate behind the posterior surface of the display covering a majority of the posterior display surface; and**

The parties dispute whether Kimura discloses a constricted convection plate behind the posterior surface of the display covering a majority of the posterior display surface. MRI disputed whether the identified structure in Kimura is a constricted convection plate, and also disputes whether that alleged plate "cover[s] a majority of the posterior display surface." CIB at 144-46; CRB at 68-70. "Constricted convection plate" was construed to mean "a plate configured to form part of a constricted convection channel." Order No. 13 at 40. And "constricted convection channel" was construed to mean "constricted channel through which air may flow to remove heat from the [posterior display surface/posterior surface]." *Id.*

Respondents contend that Kimura's driving circuit is a constricted convection channel. RIB at 98. Mr. Smith-Gillespie testified that the driving circuit is positioned behind the backlight unit in a manner that causes it to form a constricted convection channel, and thus it is a constricted convection plate as construed. Tr. (Smith-Gillespie) at 964:13-21; Kimura ¶ [0078]. He further testified that in Figure 9 of the Kimura, the driving circuit appears to cover the entire display, and that this would be required to achieve the uniform cooling described in paragraph 78. Tr. (Smith-Gillespie) at 964:22-965:14; Kimura ¶ [0078]. Slide 67 of Mr. Smith-Gillespie's demonstratives shows an annotated version of Figure 9. RDX-0007 at 67; Tr. (Smith-Gillespie) at 962:19-25:

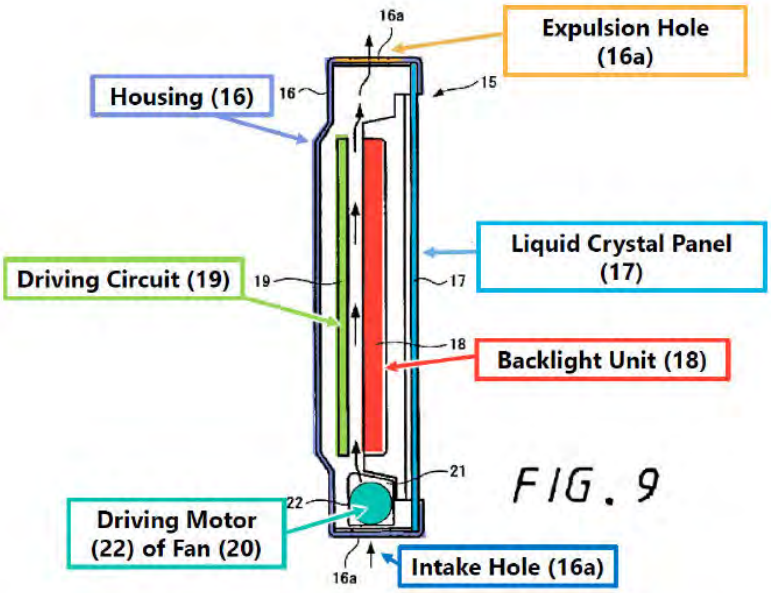


Respondents argue that a person of ordinary skill in the art would have understood that the driving circuit must cover a majority of the posterior surface of the backlight unit in order to facilitate uniform cooling. RIB at 99; Tr. (Smith-Gillespie) at 965:1-14. Mr. Smith-Gillespie testified that if it did not cover the majority of the surface, "then the thermal transfer would be different between places where the backlight was or where the driving circuit is, and where it's not." Tr. (Smith-Gillespie) at 965:1-14.

MRI argues that the driving circuit is not a constricted convection plate. CIB at 144-45. MRI argues that the driving circuit is mentioned only once, and that there is no disclosure of the composition and configuration beyond this mention. *Id.* Mr. Credelle testified that the driving circuit would not be relevant to the film of air being blown by the fan because it would not affect that uniform cooling. Tr. (Credelle) at 1172:21-1173:11. MRI points to Figure 10, which illustrates this cooling without the involvement of the driving circuit. CIB at 145; Kimura at Fig. 10:

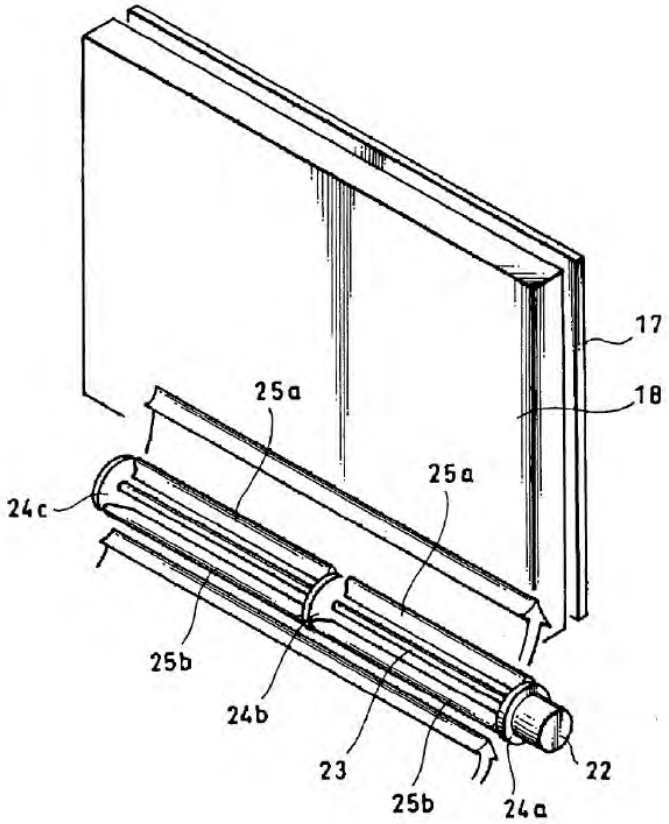


MRI also argues that the driving circuit does not cover a majority of the posterior display surface as required by this claim. CIB at 145. Mr. Credelle testified that in his opinion, a person of ordinary skill in the art cannot tell the size of the driving circuit from Figure 9; at most, they could tell the height. Tr. (Credelle) at 1173:12-19. Mr. Credelle explained that in his opinion, a driving circuit would not cover the majority of the back of a display because it would be impractical, as driving circuits are typically small printed circuit boards used to convert the TV signal into a set of signals to make a picture. *Id.* at 1173:20-1174:6. MRI points out that the opening for air flow for the fan is 700mm long, which is over two feet. CIB at 145 (citing Kimura ¶ [0078]). Mr. Credelle also disagreed that it would be obvious to enlarge the driving