circuit to cover the backlight, opining that cost is critical, and since a small printed circuit board would do the same job, there would be no need to create a larger board. Tr. (Credelle) at 1174:7-18. He opined that if the circuit board were larger, it would actually add heat to the system and prevent the system of Kimura from cooling uniformly, since the additional heat from a driving circuit will add heat, not reduce it. *Id.* at 1174:20-1176:1. In his opinion, the uniform cooling of Kimura is caused by the vanes of the fan causing air to flow in a single direction, not the driving circuit. *Id.* at 1176:2-13. MRI argues that Respondents have improperly argued invalidity based on the drawings, which are not drawn to scale. CIB at 145-46 (citing *Nystrom v. TREX Co.*, 424 F.3d 1136, 1149 (Fed. Cir. 2005)). It argues that because Kimura is silent as to the size of the driving circuit, Figure 9 cannot be used to establish its dimensions. *Id.*

The undersigned is persuaded that the driving circuit is a constricted convection plate as required by claim 9 of the '322 patent. Figure 9 illustrates clearly that the driving circuit is a plate which forms a constricted convection channel, *i.e.*, a constricted channel through which air may flow to remove heat from the posterior surface of the display. Kimura ¶ [0078], Fig. 9. Figure 9 illustrates that air flows through a channel between the driving circuit and the rear surface of the display, and there is no dispute that this would remove heat from this surface.

However, the undersigned finds that Respondents have failed to prove by clear and convincing evidence that the constricted convection plate, the driving circuit "cover[s] a majority of the posterior display surface" as required by this claim. The specification of Kimura only mentions the driving circuit once: "[a] driving circuit **19** for the flat panel display is disposed behind the backlight unit **18**." Kimura ¶ [0078]. Mr. Smith-Gillespie admits that Kimura does not disclose the size of this driving circuit. Tr. (Smith-Gillespie) at 1083:15-17. In Figure 9, the driving circuit is shown to have a similar height as the backlight unit. Kimura at Fig. 9. But the

undersigned is unpersuaded by Mr. Smith-Gillespie's testimony that Kimura's driving circuit covers a majority of the posterior display surface because Mr. Credelle's testimony was more persuasive. Mr. Credelle persuasively explained why a person of ordinary skill in the art would not understand a driving circuit as disclosed in Kimura to cover the majority of the posterior surface, and how that would not be necessary for uniform cooling. *E.g.*, Tr. (Credelle) at 1172:24-1173:11, 1173:20-1174:6, 1174:23-1176:7. Accordingly, Respondents have failed to prove by clear and convincing evidence that Kimura's driving circuit covers a majority of the posterior display surface.

Respondents have also failed to prove by clear and convincing evidence that one of ordinary skill in the art would have reason to modify Kimura's driving circuit to cover the majority of the posterior display surface. Mr. Smith-Gillespie did not opine that it would have been obvious to enlarge this driving circuit; the primary evidence cited by Respondents is highly general testimony from Mr. Smith-Gillespie about optimizing constricted convection plates. RIB at 100 (citing Tr. (Smith-Gillespie) at 1087:6-14)). MRI, on the other hand, presented persuasive testimony from Mr. Credelle explaining that there would be no need to enlarge the driving circuit, and that doing so would actually reduce the uniformity of cooling because a large circuit board would generate heat. Tr. (Credelle) at 1174:20-1176:1; *see also* CRB at 68-70.

Accordingly, Respondents have failed to show by clear and convincing evidence that Kimura discloses a constricted convection plate behind the posterior surface of the display covering a majority of the posterior display surface. Respondents have also failed to show by clear and convincing evidence that it would have been obvious to modify Kimura to contain a constricted convection plate behind the posterior surface of the display covering a majority of the posterior display surface.

d. Claim element [9d]: a means for forcing air between the constricted convection plate and the posterior surface of the electronic display.

The parties dispute whether Kimura discloses a means for forcing air between the constricted convection plate and the posterior surface of the electronic display. The parties agreed that the function of this limitation is "forcing air between the constricted convection plate and the posterior surface of the electronic display" and that the corresponding structure is "one or more fans or an air conditioning unit."

Respondents argue that the cooling fan with driving motor are a means for forcing air between the constricted convection plate and the posterior surface of the electronic display. RIB at 100-101; Tr. (Smith-Gillespie) at 965:18-966:9. They argue that this fan forces air in the channel between the driving circuit and the rear surface of the backlight unit. RIB at 100-01. They further argue that this satisfies the claim because claim 9 does not require that air be forced only between the constricted convection plate and the posterior surface of the display, and therefore even if air is driven behind the driving circuit, this fan satisfies the claims. *Id.* at 101.

MRI argues that there is no evidence that the cooling fan with driving motor are structurally equivalent to the fan disclosed in the '322 patent. CIB at 146-47. It argues that Kimura disparages traditional fans like the one in the '322 patent, and therefore the fans are distinct. *Id.* Further, MRI argues that this fan does not satisfy the function between the air exiting the fan can flow on both directions of the constricted convection plate.

The undersigned finds that Kimura discloses a means for forcing air between the constricted convection plate and the posterior surface of the electronic display. The evidence shows that Kimura has a fan which causes air to flow through the constricted convection channel. Tr. (Smith-Gillespie) at 965:18-966:9. There is nothing in the parties' agreed

construction limiting "one or more fans" to any kind of fan. The fact that Kimura's fan is different from a fan shown in a figure of the '322 patent is irrelevant when the parties agreed a fan is the disclosed structure. There is also no dispute that air will be forced between the constricted convection plate and the posterior surface of the electronic display. Although air may flow elsewhere, as well, there is no requirement in the parties' agreed construction or the '322 patent requiring that air only flow between the constricted convection plate and the posterior surface of the electronic display.

Accordingly, Respondents have shown by clear and convincing evidence that Kimura discloses a means for forcing air between the constricted convection plate and the posterior surface of the electronic display.

***

As discussed above, Respondents have failed to show, clearly and convincingly, that Kimura discloses a constricted convection plate behind the posterior surface of the display covering a majority of the posterior display surface, or that one of ordinary skill in the art would have reason to modify Kimura to do so. Respondents have therefore failed to prove by clear and convincing evidence that claim 9 is invalid as obvious.

6. Claim 12

Respondents contend that claim 12 of the '322 patent, which depends from claim 9, is anticipated and/or rendered obvious by Kimura. RIB at 101. Although MRI contests whether claim 9 is disclosed by Kimura, MRI does not dispute that the additional limitations of claim 12 are disclosed by Kimura. *See* CIB at 144-47 (disputing only limitations in claims 9 and 13). Because Respondents have failed to show that claim 9 is anticipated or rendered obvious by

Kimura, Respondents have also failed to show that claim 12 of the '322 patent is anticipated or rendered obvious by Kimura.

a. Claim element [12b]: a housing which contains the electronic display, constricted convection plate, and means for forcing air; and

There is no dispute that Kimura discloses a housing which contains the electronic display, constricted convection plate, and means for forcing air. *See* CIB at 143-47; CRB at 68-71 (not disputing this limitation). As Mr. Smith-Gillespie explained, Kimura discloses a display housing which contains the liquid crystal panel, backlight unit, driving circuit, and fan with a fan motor. Tr. (Smith-Gillespie) at 963:16-25; *see also* Kimura ¶ [0078], Fig. 9. Accordingly, Respondents have proven by clear and convincing evidence that Kimura discloses a housing which contains the electronic display, constricted convection plate, and means for forcing air.

b. Claim element [12c]: an entrance aperture within the housing which permits external ambient air to enter the housing and flow between the constricted convection plate and the posterior surface.

There is no dispute that Kimura discloses an entrance aperture within the housing which permits external ambient air to enter the housing and flow between the constricted convection plate and the posterior surface. *See* CIB at 143-47; CRB at 68-71 (not disputing this limitation). As Mr. Smith-Gillespie explained, air flows into Kimura through an air intake hole formed at the base of the display housing, and that air intake hole is the entrance aperture which permits external ambient air to enter the housing and flow between the constricted convection plate and the posterior surface. Tr. (Smith-Gillespie) at 967:1-17; *see also* Kimura ¶ [0078], Fig. 9. Accordingly, Respondents have proven by clear and convincing evidence that Kimura discloses an entrance aperture within the housing which permits external ambient air to enter the housing and flow between the constricted convection plate and the posterior surface.

7. Claim 13

a. "The cooling system from claim 12 wherein: the means for forcing air between the constricted convection plate and the posterior surface of the electronic display comprises a plurality of fans placed near the entrance aperture."

Respondents contend that claim 13 of the '322 patent, which depends from claim 12, is anticipated and/or rendered obvious by Kimura. RIB at 102-03. In addition to its arguments regarding claim 9 of the '322 patent, MRI argues that Kimura does not disclose the additional limitation of claim 13. CIB at 147. Because Respondents have failed to show that claim 9 is anticipated or rendered obvious by Kimura, have also failed to show that claim 13 of the '322 patent is anticipated or rendered obvious by Kimura. In addition, for the reasons set forth below, Respondents have failed to prove that the additional limitation of claim 13 is disclosed by Kimura or rendered obvious by Kimura.

The parties dispute whether the means for forcing air in Kimura "comprise[] a plurality of fans placed near the entrance aperture." Respondents argue that Kimura's cooling fan comprises multiple fans, RIB at 102, while MRI argues that it is a single fan, CIB at 147. Respondents also argue that if Kimura does not contain multiple fans, it would be obvious to modify Kimura to include an additional fan, RIB at 102-03, while MRI disagrees that it would be obvious, CIB at 147.

Respondents argue that as shown in Figure 11, Kimura's fan is made up of four fan elements. RIB at 102. Kimura explains that "in the case of the cooling fan shown in FIG. 11, the vanes that have been divided into two are further divided into two by the support frames 35." Kimura ¶ [0088]. Mr. Smith-Gillespie opined that because the vane assemblies are separated by other elements, these make up multiple fans. Tr. (Smith-Gillespie) at 967:18-968:2; RDX-0007 at 76:

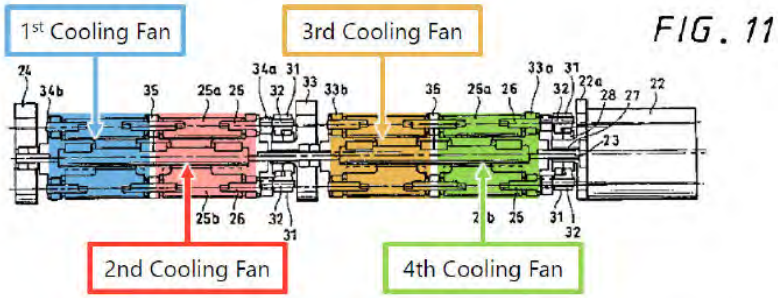

Mr. Smith-Gillespie testified that in his opinion, the fans were "additive[]" and "[e]ach one constitutes a fan by itself." Tr. (Smith-Gillespie) at 968:8-17. Mr. Smith-Gillespie also testified that it would be obvious to a person of ordinary skill in the art to include additional fans. Tr. (Smith-Gillespie) at 968:8-17. Respondents argue that Kimura does not teach away from use of a second fan. RRB at 53-54.

MRI argues that the fan in Kimura is only a single fan, not a plurality of fans. CIB at 147. MRI points to the specification and discussion of Figure 11, which refer to a "cooling fan" in the singular. *Id.* (citing Kimura ¶¶ [0088], [0090]). Mr. Credelle testified that in his opinion, several portions of Kimura identified that there was a single fan. Tr. (Credelle) at 1177:14-19. Mr. Credelle also testified that in his opinion, it would not be obvious to modify Kimura to add a second fan because Kimura teaches the use of a single fan, and because a second fan would eliminate the desired uniform airflow. *Id.* at 1178:18-1179:2.

Respondents have failed to show, clearly and convincingly, that Kimura discloses a plurality of fans placed near the entrance aperture. Respondents' argument that Kimura's cooling fan is a plurality of fans is contradicted by Kimura's own description of its fan. Kimura's discussion of Figure 11 clearly refers to a single fan with vanes divided by support frames: "in the case of the cooling fan shown in FIG. 11, the vanes that have been divided into two are further divided into two by the support frames 35." Kimura ¶ [0088]. This makes clear

that the entire structure is considered one fan. Elsewhere, Kimura also refers to a single cooling fan. *E.g.*, *id.* at Abstract, ¶¶ [0003], [0090], claims 1-7. Mr. Smith-Gillespie's opinion that this single fan is, in fact, four fans is unsupported and contradicted by Kimura's own disclosure, and therefore it is unpersuasive.

Respondents have also failed to show that it would have been obvious to modify Kimura to replace the single fan with a plurality of fans. Mr. Smith-Gillespie's testimony about obviousness regarding this element was a conclusory statement that it would be obvious to include additional fans. Tr. (Smith-Gillespie) at 968:8-17. This conclusory testimony does not establish obviousness.

Accordingly, Respondents have failed to show by clear and convincing evidence that Kimura anticipates or renders obvious claim 13 of the '322 patent.

8. Lack of Written Description For Claims 9, 12, and 13

Respondents contend that claims 9, 12, and 13 of the '322 patent are invalid for lack of written description because the specification lacks written description support for claim 9's limitation "a posterior surface where no electronics are mounted to the posterior surface of the electronic display." RIB at 103-04. MRI argues that there is adequate written description for this limitation. CIB at 177. For the reasons set forth below, Respondents have proven by clear and convincing evidence that these claims are invalid for lack of written description.

At the hearing, Respondents' expert, Mr. Smith-Gillespie, testified that in his opinion, there is no written description support for the limitation of "a posterior surface where no electronics are mounted to the posterior surface of the electronic display." Tr. (Smith-Gillespie) at 1032:21-1035:9. Mr. Smith-Gillespie explained that in his opinion, "the patent doesn't provide, either through figures or through discussion in the specification, how that would be

accomplished. In fact, it seems to show otherwise in rear views of the display." *Id.* at 1033:10-21. Mr. Smith-Gillespie testified that in his opinion, Figure 2 does not provide written description support because he saw an interface connector and a signal connector on the posterior of Figure 2. *Id.* at 1033:22-1034:25. He further explained that in his opinion, the specification did not describe any electronic display with no electronics mounted on the rear. *Id.* at 1035:1-9. Respondents argue that because the phrase never appears in the specification, and because there are no embodiments without electronics mounted to the posterior surface of the electronic display, there is no written description support for this limitation. RIB at 103-04. They also argue that Mr. Credelle failed to rebut Mr. Smith-Gillespie's opinions. *Id.* And in reply, Respondents argue that MRI's infringement positions are inconsistent with their positions on invalidity. RRB at 54.

MRI argued in response that there is an explicit disclosure of no electronics being mounted to the posterior surface of the display. CIB at 177. At the hearing, Mr. Credelle testified that because the specification discloses that the constricted convection channel is immediately behind the posterior display surface, this would mean that there are no electronics mounted to that surface. Tr. (Credelle) at 1191:19-1192:5. Further, he testified that in his opinion, it would be typical to mount electronics outside of the channel, and the need for access apertures shows that electronics are not mounted on the posterior surface. *Id.* at 1192:6-15. He also testified that in his opinion, Figures 5D-5F, 6, and 7 show the LCD with no electronics mounted to the posterior display surface. *Id.* at 1192:16-1193:3. In reply, MRI reiterated its arguments and further argued that Respondents have improperly shifted the burden to MRI to rebut Mr. Smith-Gillespie's testimony. CRB at 95-96.

The limitation at issue here, requiring that "no electronics are mounted" is a negative claim limitation. For such a limitation, "there is adequate written description support when, for example, 'the specification describes a reason to exclude the relevant [element].'" *Novartis Pharm. Corp. v. Accord Healthcare, Inc.*, 38 F.4th 1013, 1016 (Fed. Cir. 2022) (quoting *Santarus, Inc. v. Par Pharm., Inc.*, 694 F.3d 1344, 1351 (Fed. Cir. 2012)) (alteration in original), *cert. denied*, 143 S. Ct. 1748 (2023). "Silence is generally not disclosure." *Id.* at 1017. "While a negative limitation need not be recited in the specification *in haec verba*, there generally must be something in the specification that conveys to a skilled artisan that the inventor intended the exclusion, such as a discussion of disadvantages or alternatives." *Id.* "While a written description's silence about a negative claim limitation is a useful and important clue and may often be dispositive, it is possible that the written description requirement may be satisfied when a skilled artisan would understand the specification as inherently disclosing the negative limitation." *Id.* "For example, if the record established that in a particular field, the absence of mention of a limitation necessarily excluded that limitation, written description could be satisfied despite the specification's silence." *Id.*

In reviewing the evidence under the framework set forth in *Novartis*, including the testimony of the two experts and portions of the specification cited by the parties, the undersigned finds that Respondents have proven by clear and convincing evidence that the limitation "a posterior surface where no electronics are mounted to the posterior surface of the electronic display" lacks written description support. There is no dispute that the specification lacks *in haec verba* disclosure of this limitation. *See* CIB at 177; CRB at 95-96. MRI's arguments that the descriptions of the Figures or the Figures themselves disclose this limitation, explicitly or inherently, are not persuasive.

The evidence shows that at least one Figure in the '322 patent discloses electronics mounted on the posterior surface of the electronic display. Mr. Smith-Gillespie testified that Figure 2 of the '322 patent shows a posterior surface of the electronic display which contains electronics, including an interface connector and signal connector. Tr. (Smith-Gillespie) at 1033:22-1034:25.[84] MRI did not rebut Mr. Smith-Gillespie's testimony regarding Figure 2. *See* CIB at 177 (acknowledging Mr. Smith-Gillespie's testimony and not contesting it). Indeed, Mr. Smith-Credelle acknowledged that Fig. 2 shows electronics. *See* Tr. (Credelle) at 1193:7-10 (Fig. 2 of the '322 patent shows "a typical display of the era," including "the back side of a display with some common features of electronics and brackets").

MRI's evidence also fails to indicate that the inventor intended to exclude mounting electronics to the posterior surface. MRI and Mr. Credelle point to several figures and a single paragraph of the specification for written description support. But upon review of these Figures, their descriptions, and Mr. Credelle's testimony, these arguments are unpersuasive. For example, MRI relies on Figures 5D-5F. But the description of Figures 5D-5F is, at most, silent as to whether there are electronics on the posterior surface:

> FIGS. 5B through 5F show side views of additional embodiments for the constricted convection system. In FIG. 5B, one or more fans 52 are used to draw ambient air between the posterior display surface 22 and the constricted convection plate 30. In FIG. 5C, one or more fans 52 are used to force ambient air between the posterior display surface 22 and the constricted convection plate 30. FIG. 5D is similar to FIG. 5B except that the housing 80 and the septum 90 are used to direct the flow of air. In FIG. 5E, an air conditioning unit 110 is used to both cool the air and to force the cooled air between the posterior display surface 22 and the constricted

[84] Fig. 2 is described in the '322 patent as "a posterior view of a display that may be used in an exemplary embodiment." '322 patent at 3:23-24. This display is described as "display 10" with "display posterior 22." *Id.* at 4:39-41.

> convection plate 30. Finally in FIG. 5F, an air conditioning unit 110 is used in combination with one or more fans 52.

'322 patent at 6:1-13. These figures describe the arrangement of the posterior display surface, constricted convection plate, and housing, but are silent as to whether there are any electronics on the "posterior display surface 22." *Id.* There is nothing in this description that suggests the figures are intended to show more detail than the relative arrangement of these components, such whether any components are on the posterior surface of the display. Moreover, the description contemplates the use of "posterior display surface 22" which, as discussed above regarding Figure 2 of the '322 patent, is shown with electronics. *Id.*; *see id.* at 3:23-24, 4:39-41. Thus, both the description and the figures are at most silent as to whether any electronics are mounted on the electronic display surface. *See Novartis*, 38 F.4th at 1017 ("the written description cannot be met through simple disregard of the presence or absence of a limitation"); *id.* ("Silence is generally not disclosure.").

The description of Figures 6 is also, at most, silent as to whether there are electronics on the posterior surface. The description of Figure 6 reads:

> FIG. 6 is a double display housing 60 utilizing an exemplary embodiment of the constricted convection air cooling system 54. A constricted convection plate 30 is mounted to a display posterior 22. The constricted convection plate 30 and the display posterior 22 define a constricted convection cooling channel 50 immediately behind the display posterior 22. An entrance opening 62 adapted to receive air is defined by the constricted convection plate 30. An exit opening 64 adapted to expel air from the constricted convection cooling channel 50 is defined by the constricted convection plate 30 and the display posterior 22. As above, the constricted convection plate 30 may have access apertures 34. The access apertures 34 allow access to hardware located behind the constricted convection plate 30. The access apertures 34 may be closed before use using plugs or other similar devices (not shown in the Figures).

Id. at 6:14-29. This paragraph has no explicit disclosure about whether there are electronics mounted on the posterior display surface. As with Figures 5D-5F, it describes Figure 6 as utilizing "display posterior 22" which (as discussed *supra*) was depicted in Figure 2 as having electronics. *Id.* And even if Figure 6 provided a detailed depiction of the device (rather than a schematic only showing certain elements), the evidence fails to indicate that the figure necessarily shows no electronics are mounted to that surface as it is covered in part by constricted convection plate 30:

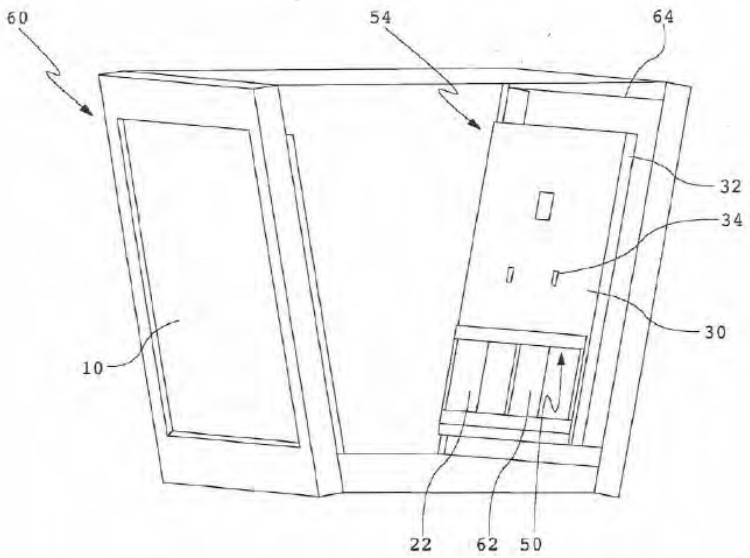

Id. at Fig. 6; *see Novartis*, 38 F.4th at 1017 ("if the record established that in a particular field, the absence of mention of a limitation ***necessarily*** excluded that limitation, written description could be satisfied despite the specification's silence") (emphasis added).

MRI argues, based on the testimony of Mr. Credelle, that the disclosure of the constricted convection channel "immediately behind the display posterior" would indicate that there are no electronics on the posterior display surface. CIB at 177. Mr. Credelle testified that because this paragraph states that the channel is immediately behind the display posterior, there "cannot be

electronics mounted to that surface." Tr. (Credelle) at 1191:19-1192:5; *see also id.* at 1192:22-1193:3 ("one can see that display posterior 22 . . . is absent of electronics. And that's because there's going to be a channel for cooling."). Mr. Credelle does not persuasively explain the reasoning for his inference, which appears at odds with Figure 2's depiction of display posterior 22 as having electronics. Moreover, even if a channel for cooling did not have electronics, this does not necessarily mean that there are no electronics "mounted to the posterior surface of the electronic display."[85]

Further, Mr. Credelle's testimony about access apertures also undermines his opinion that Figure 6 necessarily discloses no electronics being mounted to the posterior surface. Figure 6 clearly shows access apertures in the constricted convection plate over the designated constricted convection channel. As Mr. Credelle explained, access apertures allow for access for wiring and other connections through the access apertures. Tr. (Credelle) at 1192:6-15. Moreover, the description of Figure 6 states that the apertures "allow access to hardware located behind the constricted convection plate[.]" '322 patent at 6:25-27. This suggests that there are components behind the constricted convection plate and fails to indicate the absence of electronics mounted to the posterior display surface. And in another embodiment, Figure 3 (a constricted convection plate), the access apertures of the constricted convection plate are explicitly described as being used to allow access to "hardware" on the display posterior. '322 patent at 5:6-10 ("[t]he access apertures 34 are defined by the constricted convection plate 30 and allow access to hardware found on the display posterior 22"). Accordingly, the evidence fails to indicate that Figure 6

[85] Claim 9 itself states only that the constricted convection plate should cover "a majority of the posterior display surface." '322 patent, cl. 9. Further, the specification discloses embodiments where the constricted convection plate only covers a portion of the posterior display surface. '322 patent at 5:29-31. The specification also discloses that the constricted convection channel can vary in width from less than half an inch to five inches. *Id.* at 5:14-21.

inherently discloses that the posterior display surface has no electronics mounted to the posterior surface. *See Novartis*, 38 F.4th at 1017.

The disclosure about Figure 7 is also silent, at most, about whether there are electronics mounted to the display posterior.

> FIG. 7 is a double display housing 60 that may use an exemplary embodiment of the constricted convection air cooling system 54. The display posterior 22 may include mounting brackets 20. The mounting brackets 20 are shown by way of example and not by way of limitation. The present invention may use various shapes and numbers of mounting brackets 20. The mounting brackets 20 may serve to attach the constricted convection plate 30 (shown in FIG. 3) to the display posterior 22. The height of the mounting brackets 20 extend from the display posterior defines the depth of the constricted convection cooling channel 50 (shown in FIG. 5). Further embodiments may not utilize mounting brackets as they are not necessary to practice the invention.

'322 patent at 6:47-59.[86] And in review of the Figure, it is unclear whether the posterior surface has no electronics mounted to it—for example, there is an attachment on the top portion of the display surface as shown:

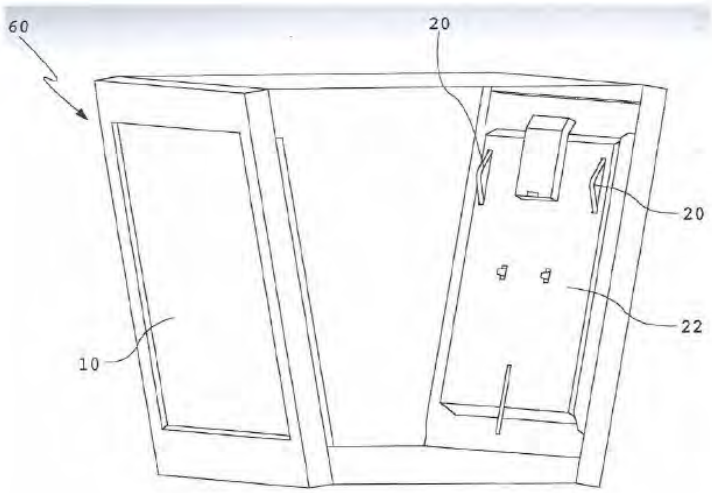

[86] Figure 7, like Figure 6, refers to "display posterior 22" which as discussed *supra* may have electronics.

Id. at Fig. 7. Given the silence, the evidence fails to indicate that the '322 patent inherently excludes electronics from the posterior surface of Figure 7. *Novartis*, 38 F.4th at 1017.

In considering the entire record, the evidence shows that the specification is, at most, silent as to whether there are any electronics mounted on the posterior surface of the display in any embodiment. That silence is "a useful and important clue" here. *Novartis*, 38 F.4th at 1017. The evidence also shows that it is not necessary or inherent in any Figure of the '322 patent that no electronics are mounted on the posterior surface. *See id.* Accordingly, the evidence clearly and convincingly shows that claims 9, 12, and 13 are invalid for lack of written description because there is no written description support for claim 9's limitation "a posterior surface where no electronics are mounted to the posterior surface of the electronic display."

D. The '287 Patent

Respondents contend that claim 12 of the '287 patent is invalid for obviousness in view of the Karppanen reference (RX-1351). RIB at 104.[87] For the reasons below, Respondents have not proven obviousness of claim 12 by clear and convincing evidence.

1. Claim 12

a. Claim element [12pre]: An electronic display assembly comprising:

There is no dispute that Karppanen discloses an electronic display assembly. RIB at 105; CIB at 148-151. Karppanen describes the invention as relating to "an electronic information board comprising a frame (40), a flat display element (26), such as a TFT LCD display or plasma display for presenting information, and electronic equipment for controlling the display

[87] While Respondents argue that Karppanen discloses each limitation of claim 12 (and thus anticipates claim 12), Respondents correctly note that an anticipatory reference also renders the claim invalid as obvious. See RRB at 54 n.18.

element." RX-1351 (Karpennen) at Abstract; *see also* 6:21-24 ("the display element 26 of the information board (Fig. 2) has been placed inside the display casing"); 8:7-11 ("the display element is preferably a TFT LCD display . . . . the display element can also be some other suitable, flat electronic display element, such as a plasma display, a LED display or an organic LED display.") Accordingly, to the extent the preamble is limiting, the evidence clearly and convincingly shows that Karppanen discloses an electronic display assembly. [88]

b. Claim element [12a]: a housing;

There is no dispute that Karppanen discloses a housing. RIB at 105; CIB at 148-151. Karppanen states that the electronic information board "has a weatherproof display casing (10) for the display element and a weatherproof device casing (12) for the electronic equipment needed for controlling the display element." RX-1351 at Abstract; *see also* 6:21-24 ("the display element 26 of the information board (Fig. 2) has been placed inside the display casing"). Accordingly, the evidence clearly and convincingly shows that Karppanen discloses a housing.

c. Claim element [12b]: a liquid crystal display (LCD) positioned within the housing and having a backlight;

There is no dispute that Karppanen discloses a liquid crystal display (LCD) positioned within the housing and having a backlight. RIB at 105; CIB at 148-151. Mr. Smith-Gillespie testified that the POSITA would understand that an LCD display would necessarily require a backlight for illuminating the display element and that the POSITA would have understood Karppanen's reference to the "background light of the display" as referring to the backlight of an LCD. RX-1351 at 6:21-26 ("the display element 26 of the information board (Fig. 2) has been placed inside the display casing. Typically, this equipment includes a programmable control unit

[88] No party has argued that the preamble is limiting. *See generally* Updated Joint Claim Construction Statement (EDIS Doc. ID 792078).

with its power supply for controlling the display, and the power supplies of the background light of the display"); Tr. (Smith-Gillespie) at 991:3-14. Accordingly, the evidence clearly and convincingly shows that Karppanen discloses an electronic display assembly comprising a liquid crystal display (LCD) positioned within the housing and having a backlight.

d. Claim element [12c]: wherein the electronic display is coolable by a combination of a closed loop of isolated gas which circulates within the housing and an open loop of ambient air which passes through the housing and along the backlight.

The parties dispute whether Karppanen teaches or renders obvious this claim element. In particular, the parties dispute whether Karppanen discloses an open loop of ambient air that passes "along the backlight" and whether Karppanen discloses a closed loop of "isolated gas." [89]

(i) *"open loop of ambient air which passes through the housing and along the backlight"*

According to Respondents, in Karppanen the claimed open loop consists of the cooling space 20 between the display casing and the device casing wherein air flows in through the ventilator slots 34 (shown in Figure 1) and air flows out through ventilator holes 74 (shown in Figure 3). Cooling space 20 is depicted in their demonstrative reproduced below, which is an annotated version of Figure 2 of Karppanen. RIB at 108-109; RDX-0007.0087.

[89] MRI did not dispute that Karppanen discloses an electronic display that is coolable by a combination of the asserted closed loop and open loop. The evidence shows that Karppanen's electronic display is coolable by a combination of the asserted closed loop and the asserted open loop. *See* RIB at 109; Tr. (Smith-Gillespie) at 993:22-994:23; RDX-0007.0089.

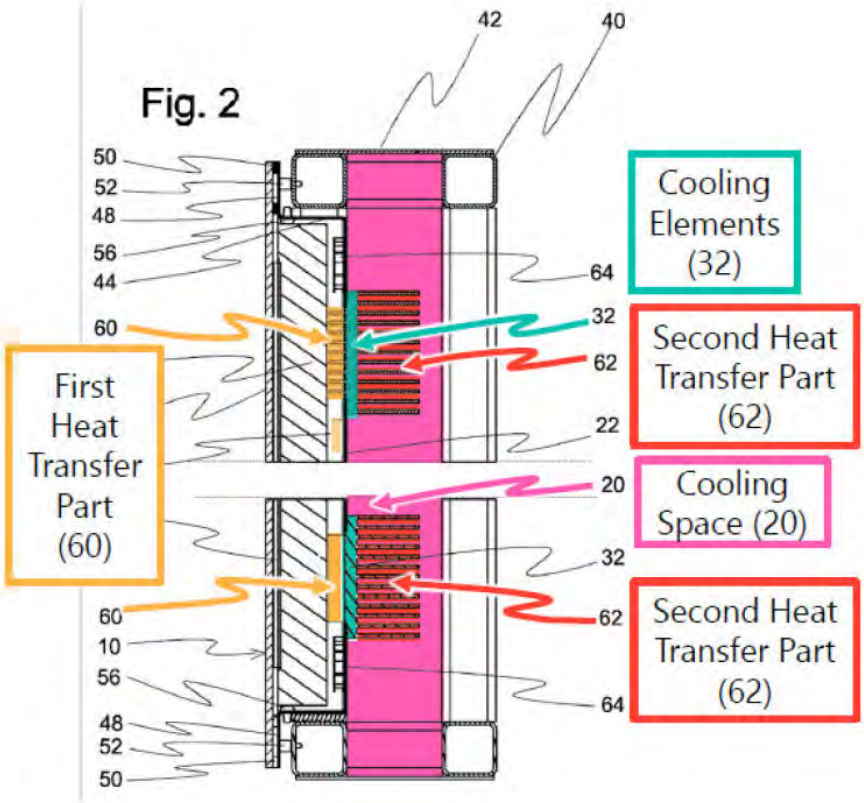

RDX-0007.0087.

Respondents assert that the POSITA would have understood cooling elements 32 (which comprise first heat transfer part 60 and second heat transfer part 62) to be part of the rear of the electronic display, and as such the open loop air travels "along the backlight." RIB at 109; Tr. (Smith-Gillespie) at 993:22-994:12. Respondents argue that Karppanan discloses that the cooling elements can be "fastened to the rear surface of the display element, i.e., the backlight" and a POSITA would thus have "understood the cooling elements 32 to be part of the rear of the electronic display and for the air within the open loop to thus be traveling 'along the backlight.'" RIB at 109. Respondents argue that "along the backlight" does not require direct contact between the air in the open loop and the backlight or prohibit the presence of intervening

structures to satisfy the claim. RRB at 56-57. Respondents argue that MRI's invalidity position is at odds with its infringement position. *Id.* at 56.

According to MRI, it is the closed loop of air that passes along the backlight, not the open loop. CIB at 149-150. MRI asserts that the ambient air of the open loop is separated from the display and the closed loop by a wall and cooling elements, and so the ambient air cannot pass "along the backlight." CIB at 150; Tr. (Pokharna) at 1244:12-1245:16. MRI argues that Respondents take inconsistent positions on this claim language for non-infringement and invalidity. CRB at 72-76. MRI also argues that there is a heightened presumption that Karppanen does not invalidate claim 12 of the '287 patent because it was considered by the examiner and cited on the face of the patent. CRB at 71. MRI argues that there "are simply too many intervening structures between the open loop and backlight for a reasonable person skilled in the art" to conclude that the open loop passes "along the backlight."

Here, the evidence fails to clearly and convincingly show that the open loop of ambient air passes "along the backlight." At least based on the expert testimony of record, Karppanen does not disclose the location and structure of the backlight and its components, and thus it is not clear how the POSITA would understand the positioning of the ambient air flow with respect to the backlight. Moreover, to the extent cooling elements (32) are fastened to the display element,[90] the evidence fails to clearly and convincingly show that this means the cooling elements are part of the "backlight" or that air flowing along these cooling elements are flowing "along the backlight." *See* Tr. (Pokharna) at 1244:14-1245:16 (noting that in the embodiment

[90] Karppanen explains that the upper part of Figure 2 illustrates "first heat transfer part" comprising cooling fins, while the lower part of Fig. 2 shows the "first heat transfer part" comprising a conduction element. Karppanen at 9:1-20; *see also* Tr. (Pokharna) at 1253:22-1254:9. Karppanen states that the first heat transfer part is preferably fastened to elements such as the display where the first heat transfer part is a conduction element. *See* Karppanen at 8:29-36.

relied upon by Mr. Smith-Gillespie, one has a "conduction element" and other intervening structures between the open loop and backlight). Mr. Smith-Gillespie's opinion appears based on a (rejected) claim construction that equates "along" with any structure "in thermal communication with." *See* Tr. (Pokharna) at 1243:8-13; Order No. 13 at 51-55.

For these reasons, the evidence does not clearly and convincingly show that Karpannen discloses an "open loop of ambient air" which passes "along the backlight."

(ii) *"closed loop of isolated gas which circulates within the housing"*

The parties also dispute this claim element. According to Respondents, in Karppanen the claimed closed loop of isolated gas consists of the gap between the display element and the display casing containing fans that circulate air between the walls of the display casing and the outer surface of the display element, as depicted in their demonstrative reproduced below. RIB at 106; RDX-0007.0086.

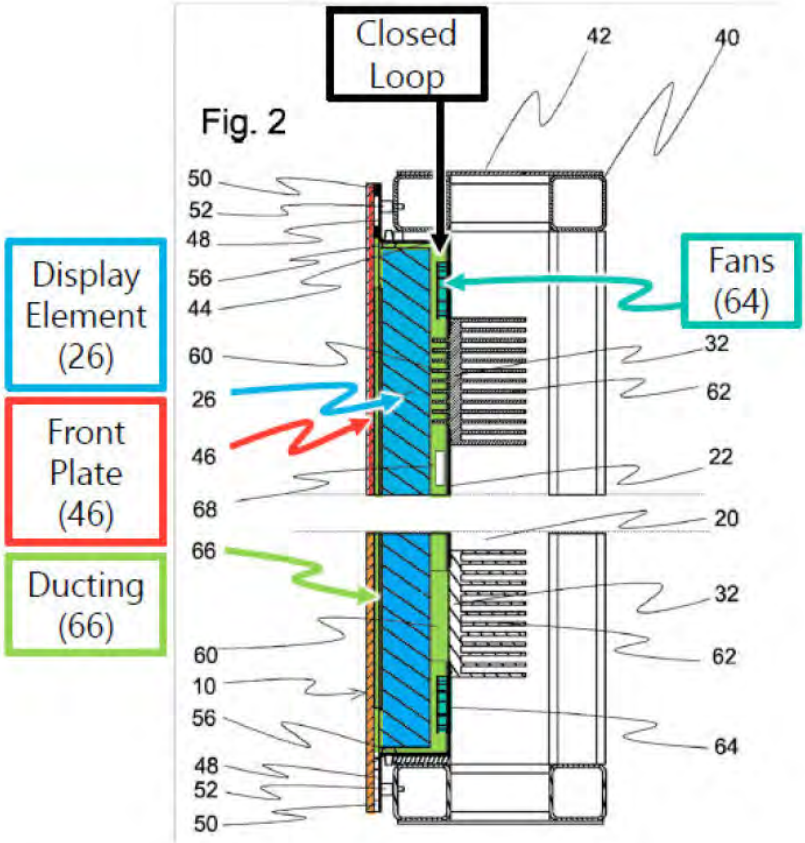

RDX-0007.0086.

Respondents argue that the closed loop in Karppanen contains "isolated gas" because the gas circulates within a "closed display casing" that has been made "weatherproof." *Id.* Respondents further argue that the closed loop contains "isolated gas" because the display casing is sealed by "sealing elements" 50 so that the edge parts of the front plate and the back wall "form a closed display casing." RRB at 55-56. Respondents contend, and Mr. Smith-Gillespie testified, that the POSITA would have understood that the display casing "seals out dust, dirt, and humidity" such that the air circulating within the complete loop is isolated from external ambient air. *Id.*; Tr. (Smith-Gillespie) at 992:23-993:4.

MRI argues that Karppanen fails to teach or suggest that the closed loop does contains "isolated gas." CIB at 148-149. According to MRI, Karppanen's reference to the display casing as being "weatherproof" and "closed" is insufficient to inform the POSITA of the extent to which those compartments must be sealed to dust and external air. *Id.* at 149; Tr. (Pokharna) at 1246:4-1247:10.

The undersigned finds that Respondents have shown, by clear and convincing evidence, that Karppanen discloses the claimed "closed loop of isolated gas which circulates within the housing." There is no dispute that the Karppanen system has a "closed loop" of gas that "circulates within the housing." CIB at 148-149; RIB at 106. The only dispute between the parties is over whether the closed loop contains "isolated gas." The undersigned finds Mr. Smith-Gillespie's testimony persuasive and supported by Karppanen's disclosure. *See* Tr. (Smith-Gillespie) at 992:23-993:4 (testifying the loop is "essentially isolated" because it is "a sealed system."); *see also id.* at 992:5-8; RDX-0007.0086. The '287 patent does not require the "isolated gas" of the closed loop to be completely isolated. *See* '287 patent at 4:19-23 ("The isolated gas cooling chamber need not necessarily be hermetically sealed from the external air. It is sufficient that the gas in the chamber is isolated to the extent that dust and contaminates may not substantially enter the first gas chamber.") The disclosures of Karppanen, including the disclosure that the device casing is "closed" (RX-1351 at 6:20-21), that the device casing is closed through the use of "sealing elements 50" (*id.* at 7:35-40), and the reference to the use of "ducting . . . between the walls of the casing and the display element for directing the circulation of air" (*id.* at 4:29-36) all clearly support Mr. Smith-Gillespie's testimony that Karppanen depicts a sealed system of "isolated air." Dr. Pokharna's testimony in opposition primarily relies on the meaning of "weatherproof" and fails to persuasively address the "sealing elements" and

"ducting" set forth in the Karppanen's disclosure. *See* Tr. (Pokharna) at 1246:8-1247:1; *id.* at 1271:1-10 (agreeing the patent states that "sealing elements are used to create a closed display casing"); *id.* at 1299:2-1300:9 (responding to question regarding "sealing" with discussion of weatherproofing).

The evidence thus shows, clearly and convincingly, that Karppanen discloses a "closed loop of isolated gas which circulates within the housing."

***

The undersigned concludes, based on the foregoing evidence and arguments, that Respondents have not proven, by clear and convincing evidence, that Karppanen renders claim 12 anticipated or obvious.

E. The '740 Patent

Respondents contend that claims 1 and 5 of the '740 patent are invalid for obviousness in view of the Karppanen reference (RX-1351) and the Yare reference (RX-1398), each separately or each combined with the knowledge of the POSITA. *See* RIB at 104. For the reasons below, Respondents have proven obviousness (and anticipation) of claims 1 and 5 by clear and convincing evidence in view of Karppanen.[91] The evidence does not show, clearly and convincingly, that claim 1 or 5 is obvious in view of Yare.

[91] As noted by Respondents, a claim is obvious if anticipated. *See* RIB at 54; *Realtime Data, LLC v. Iancu*, 912 F.3d 1368, 1373 (Fed. Cir. 2019).

1. Claim 1

a. Karppanen

(i) *Claim element [1pre]: An electronic display comprising:*

There is no dispute that the preamble is met by Karppanen. *See* CIB at 151-55. In addition, no party has argued that the preamble is limiting. *See generally* Updated Joint Claim Construction Statement (EDIS Doc. ID 792078).

(ii) *Claim element [1a]: an electronic image assembly having a front portion and a rear portion;*

There is no dispute that Karppanen discloses an electronic image assembly having a front portion and a rear portion. RIB at 116; CIB at 151-155. Karppanen describes the invention as relating to "an electronic information board comprising a frame (40), a flat display element (26), such as a TFT LCD display or plasma display for presenting information, and electronic equipment for controlling the display element." RX-1351 (Karpennen) at Abstract. Mr. Smith-Gillespie explained that the claimed "front portion" is the "Image-forming layer on the front of the LCD" and that the "rear portion" is the "rear portion of the backlight." Tr. (Smith-Gillespie) at 996:21-25; RDX-0007.0095; RIB at 116.

(iii) *Claim element [1b]: an open loop ambient air flow path behind the rear portion of the electronic image assembly;*

There is no dispute that Karppanen discloses an electronic display assembly comprising an open loop of ambient air flow path behind the rear portion of the electronic image assembly. RIB at 117; CIB at 151-155. Mr. Smith-Gillespie testified that this claim element is met for the same reasons provided with respect to claim element 12(c) of the '287 patent. *See* Tr. (Smith-Gillespie) at 997:15-23; RDX-0007.0096. According to Mr. Smith-Gillespie, in Karppanen the claimed open loop corresponds to the cooling space 20 wherein air flows in through the ventilator slots 34 (shown in Figure 1 of Karppanen) and air flows out through ventilator holes

74 (shown in Figure 3 of Karppanen), through the "cooling space 20" as depicted in the demonstrative reproduced below:

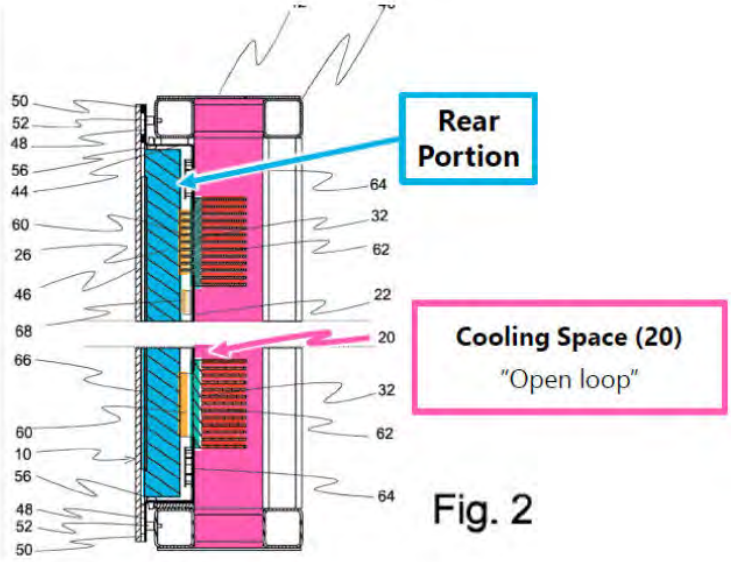

RIB at 108-109, 117; Tr. (Smith-Gillespie) at 997:1-14; RDX-0007.0096.

The evidence clearly and convincingly shows that this limitation is met by Karppanen.

(iv) *Claim element [1c]: a closed loop gas circulation path about the electronic image assembly;*

There is no dispute that Karppanen discloses an electronic display assembly comprising a closed loop gas circulation path about the electronic image assembly. RIB at 117; CIB at 151-155.

Mr. Smith-Gillespie testified that, in Karppanen the claimed closed loop consists of the gap between the display element and the display casing containing fans that circulate air between the walls of the display casing and the outer surface of the display element. RIB at 106, 117; Tr.

(Smith-Gillespie) at 997:18-21; RDX-0007.0086; RDX-0007.0097. MRI does not dispute that Karppanen discloses this claim element.[92]

The evidence shows, clearly and convincingly, that Karppanen discloses this claim element.

(v) *Claim element [1d]: a common heat exchanger located in the pathway of both the closed loop gas circulation path and the open loop ambient air flow path;*

The parties dispute whether Karppanen discloses an electronic display assembly comprising a common "heat exchanger" located in the pathway of both the closed loop gas circulation path and the open loop ambient air flow path. The parties' dispute centers around the scope and meaning of the claimed "heat exchanger." RIB at 112-118; CIB at 152-155.[93]

Figure 2 of Karppanen reproduced below, depicts cooling elements 32, including heat transfer part 60 and heat transfer part 62:

[92] The "closed loop" claim element of the '740 patent, unlike the "closed loop" claim element of the '287 patent, does not require a closed loop of "isolated gas." Thus, while MRI disputed whether the claimed closed loop of isolated gas was present in Karppanen for purposes of the '287 patent, it does not dispute the closed loop element for purposes of the '740 patent. *See generally* CIB at 148.

[93] MRI does not dispute that, to the extent there is a heat exchanger, "cooling elements 32" is a "common" heat exchanger. See CIB at 151-155; CRB at 78-80.

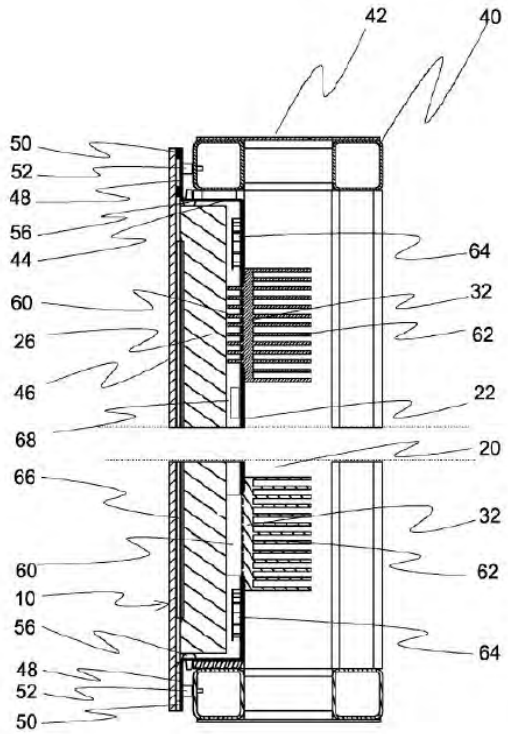

Karppanen (RX-1351), Fig. 2; *id.* at 8:13-16 ("In the back wall of the display casing there are cooling elements 32, which have a first heat transfer part 60 extending to the inside of the display casing and a second heat transfer part 62 extending to the cooling space 20 outside the display casing").

Karppanen states that heat transfer part 62 (extending to the cooling space 20 outside the display casing) comprise "cooling fins" and may "also comprise other elements by which the transfer of heat from the cooling element to the cooling space is implemented." Karppanen at 8:13-27. Karppanen states that "first heat transfer part 60" (extending to the inside of the display casing) may "comprise cooling fins or conduction elements or both." *Id.* at 8:13-15, 29-30; *see*

also id. at 9:17-20 ("either conduction elements or cooling elements comprising cooling fins, or both, can be used in the display casing according to need").[94]

Respondents provide the following annotated version of Figure 2 of Karppanen (RIB at 119) showing the locations of the cooling elements 32, including the first heat transfer part 60 and the second heat transfer part 62:

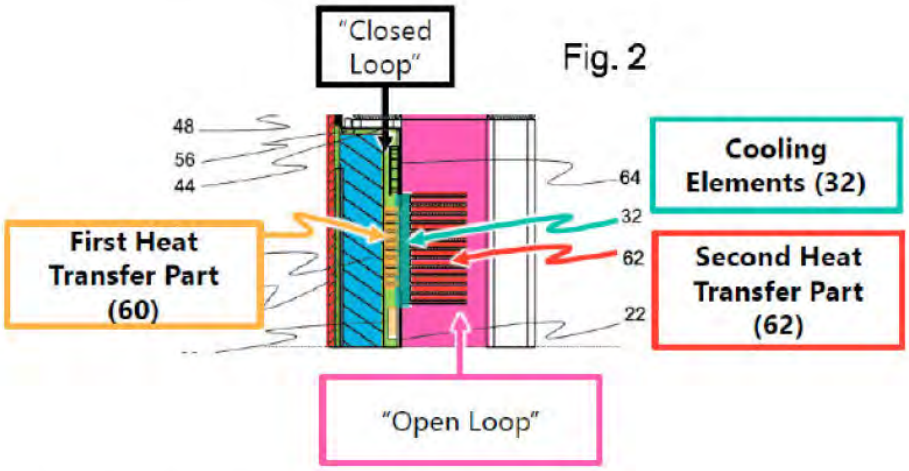

RIB at 119; RDX-0007.0098; Tr. (Smith-Gillespie) at 997:24-998:11.

According to Respondents, Karppanen discloses the claimed "heat exchanger" because the plain and ordinary meaning of "heat exchanger" encompasses a device "designed to transfer heat from a relatively hotter body to a relatively cooler body," and that in the '740 patent the "heat exchanger" is an "air-to-air" heat exchanger rather than, for example, a liquid-based heat exchanger. RIB at 112; Tr. (Smith-Gillespie) at 998:12-999:4. Respondents argue that the specification, expert testimony, academic literature, and prosecution history are all consistent

[94] Karppanen explains that the upper part of Figure 2 illustrates "first heat transfer part" comprising cooling fins, while the lower part of Fig. 2 shows the "first heat transfer part" comprising a conduction element. Karppanen at 9:1-20; *see also* Tr. (Pokharna) at 1253:22-1254:9.

with its proposed construction. RIB at 112-16. Respondents argue that the plain and ordinary meaning of "heat exchanger" encompasses the "cooling element 32, comprised of a first heat transfer part 60 and a second heat transfer part 62" of Karppanen. RIB at 118 (citing Tr. (Smith-Gillespie) at 997:24-998:11). Respondents further argue that, even if not disclosed, this claim element would have been obvious in view of Williams, which MRI's expert agreed discloses a heat exchanger. *See* RIB at 121-122.

According to MRI, heat exchangers "facilitate the heat transfer between two non-mixing fluid streams (air or liquid) by creating adjacent channels through which each distinct fluid may flow. CIB at 152; *see also* Tr. (Pokharna) at 1282:24-1283:5. MRI contends that heat exchangers are distinct from other thermal management devices such as heat sinks, cooling plates, and finned walls that "merely exchange heat between two systems but are not the class of devices referred to as a 'heat exchanger.'" *Id.* MRI argues that the '740 patent specification describes fluid-to-fluid heat exchangers using multiple alternative channels for two different air flows (*e.g.* an open loop and a closed loop) wherein heat is transferred through the walls of the channels. *Id.* (citing '740 patent (JX-0004) at 1:64-2:26; 4:18-38). MRI further asserts that prior art such as CX-1983 "confirm that heat exchangers are a distinct form of thermal management device from heat sinks and finned walls." CIB at 153 (citing Tr. (Pokharna) at 1256:1-9.[95] MRI argues that Respondents' definition is overly broad because it would "sweep in not only the thermal management devices distinguished in the background of the patent, but would even sweep in nearly every structure—including the windows of the building." CIB at 153 (citing Tr.

[95] CX-1983 was not admitted into evidence and thus has not been considered apart from Dr. Pokharna's testimony regarding Wellhofer (which he identifies as corresponding to CX-1983). Dr. Pokharna's testified that Wellhofer "specifically talks about that heat exchangers that work on the air-to-air principle have proven to be unsuitable due to their inflexible design" but did not discuss Wellhofer in connection with heat sinks or finned walls. *See also* RRB at 61 and n.22; Tr. (Pokharna) at 1256:1-9.

(Pokharna) at 1252:4-18). MRI argues that Karppanen's "cooling elements 32" are "different and distinct from heat exchangers" and that "even if the cooling elements 32 are not thermoelectric devices as described in the preferred embodiment, their configuration is akin to a heat sink or finned wall—and are still not heat exchangers." CIB at 153 (citing Tr. (Pokharna) at 1253:21-1255:13).

Upon review of the evidence of record, the undersigned finds that the evidence clearly and convincingly shows that Karppanen discloses the claimed "heat exchanger." The evidence of record shows that the term "heat exchanger," as used in the patent, has a broad meaning and is not limited to the heat exchangers specifically described. *See* '740 patent at 4:20-22 ("many types of heat exchangers are known and can be used with any of the embodiments herein").[96] Further, the Incropera reference entitled "Fundamentals of Heat and Mass Transfer," discussed by MRI's expert, Dr. Pokharna, includes a chapter entitled "Heat Exchangers." *See* CX-2092.00676; Tr. (Pokharna) at 1251:1-8; CDX-12C at 27-28.[97] That chapter indicates that the term heat exchanger can generally refer to a type of device used to implement "[t]he process of heat exchange between two fluids that are at different temperatures and separated by a solid wall." CX-2092.00676; *see also* Tr. (Pokharna) at 1281:7-23. Here, Mr. Smith-Gillespie testified—and Dr. Pokharna did not dispute—that the asserted heat exchanger of Karppanen operates to transfer heat between "closed loop" of air inside the display casing and the "open

[96] That the term "heat exchanger" can have a broad meaning is consistent with the prosecution history, in which the examiner interpreted a "heat sink" disclosed by the prior art Thielemans patent as a "heat exchanger." *See* RIB at 114; JX-0009.03769-70 (rejection); 3814-16 (traversing rejection); RX-1368 (Thielemans) ¶ [0049]. It also appears to be consistent with a claim construction proposal initially set forth by MRI. *See* RIB at 114.

[97] Dr. Pokharna testified that this reference "is the most popular textbook of heat transfer that is used around the world for the first class in heat transfer in undergraduate level, as well as graduate level." Tr. (Pokharna) at 1251:1-8; CDX-12 at 27; CX-2092.

loop" in the cooling space of Karppanen. *See* Tr. (Smith-Gillespie) at 999:3-1000:4 (testifying that the cooling elements in Karppanen work by a heat transfer mechanism whereby "the element in the hot airflow absorbs heat from the hot airflow and transfers it to the element that's in the cool airflow"); *see also* Karppanen at 8:13-21 ("[I]n the back wall of the display casing there are cooling elements 32, which have a first heat transfer part 60 extending to the inside of the display casing and a second heat transfer part 62 extending to the cooling space 20 outside the display casing . . . The task of the cooling elements is to transfer excess thermal energy from the display casing to the cooling space").[98]

Further, Mr. Smith-Gillespie persuasively testified that the structure disclosed by Karppanen is similar to that disclosed in the prior art Williams reference (RX-1397), which Williams states—and Dr. Pokharna agreed—discloses a "heat exchanger." *See* Tr. (Pokharna) at 1256:10-12 (Williams "uses a heat exchanger").[99] Specifically, Mr. Smith-Gillespie testified that Williams disclosed a "closed loop" of circulating air that is guided through the "bottom zone of a plate heat exchanger" and an ambient airflow moving through the "top portion" of the heat exchanger, as shown in his demonstrative reproduced below, and that this structure closely resembles the structure shown in Karppanen:

[98] Dr. Pokharna did not dispute that the asserted heat exchanger operates to transfer heat from air to air, but rather argues than it occurs using a "fin structure" that is distinguished in the background section of the patent. *See* Tr. (Pokharna) at 1253:22-1254:9. This argument is discussed below.

[99] Williams also appears to use the term "heat sink" to describe its heat exchanger, weighing against MRI's contention that a heat sink necessarily cannot operate as a heat exchanger. *See* Williams (RX-1397) at 1:12-14, 1:40-41, 6:29-31 ("A plurality of heat sinks or heat exchangers 130a, 130b, 130c may be coupled to the plenum via heat exchange bracket 140"), Figs. 1C, 1D; Tr. (Smith-Gillespie) at 1004:21-1005:6; RIB at 121.

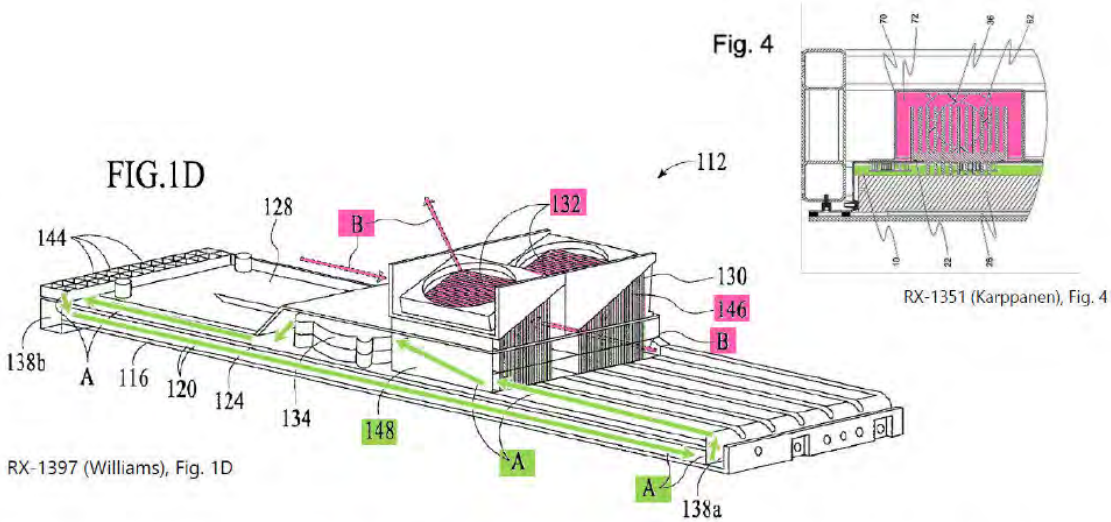

See Tr. (Smith-Gillespie) at 1005:2-1006:9; RDX-0007.00104; RX-1397; *see also* RX-1397 at 6:61-7:3 ("The heated air may be directed to flow through channels (not shown) on side 138a of plenum 128 to the bottom portion 148 of heat exchanger 130. Fans 132 may direct external air in the direction of arrows B, through a plurality of fins 176 . . . on top portion 146 of heat exchanger 130 . . ."). Mr. Smith-Gillespie testified that both Karppanen and Williams use arrays of fins in the recirculating air loop and ambient airflow path, and the differences concern "the thickness and number of fins that are in each of the respective airflow paths." Tr. (Smith-Gillespie) at 1006:1-9, 1007:6-8; *see also* Tr. (Pokharna) at 1274:24-1275:10 (testifying that the second heat transfer part 62 in Figure 3 of Karppanen is shown as a "series of plates"); RX-1351 Fig. 3. Dr. Pokharna did not persuasively dispute Mr. Smith-Gillespie's testimony regarding the structural similarities Mr. Smith-Gillespie identified between Karppanen and the heat exchanger

in Williams, stating only that the Williams heat exchanger is "fairly chunky in volumeness" and "requires some specific configurations." Tr. (Pokharna) at 1256:10-19.[100]

Accordingly, based on the evidence discussed above, the record clearly and convincingly shows that the cooling fins structure disclosed by Karppanen constitutes a "heat exchanger" within the meaning of the '740 patent.

MRI's arguments do not persuasively indicate otherwise. MRI argues applying the term "heat exchanger" to the "cooling fins" structure shown in Karppanen would contradict the patent's discussion of "fins" in the background section. *See* CIB at 152 (citing JX-0004, 1:64-2:26, 4:18-38). MRI further argues that this approach is at odds with a provisional application listed on the face of the '740 patent, which "provides the first mention of 'heat exchanger' in the '740 and '142 Patent family." CRB at 80. The portions cited by Complainant, however, do not disclaim the use of fin structures to form heat exchangers[101] and, for example, the Incropera reference cited by Dr. Pokharna indicates that fins may be used in heat exchangers. *See* CX-2092.00711. In light of the persuasive expert testimony that the fin structure used in Karpannen is similar to that in Williams, and the other evidence discussed above, these arguments do not carry significant weight.[102] Dr. Pokharna's testimony, including his acknowledgment that both

[100] Complainant additionally argued that Williams "does not disclose a configuration where a heat exchanger extends between the wall of a modular enclosure, with a plate/wall running through the middle of the heat exchanger and separating the two halves of the device." CIB at 154. This argument is unclear and, to the extent it goes beyond Dr. Pokharna's testimony, constitutes unpersuasive attorney argument.

[101] In addition, MRI did not propose the term "heat exchanger" for construction and thus any argument that the term should be applied apart from its plain and ordinary meaning has been waived.

[102] Moreover, Dr. Pokharna's testimony regarding heat exchangers was not internally consistent. Dr. Pokharna's suggestion that heat exchangers necessarily require "flow channels through which you have the two fluids, the heating or the cooling fluid going through it" (Tr. (Pokharna) at 1251:24-1252:3, 1282:21-1283:8) is at odds with his argument that Yare discloses a heat exchanger even though—according to Dr. Pokharna— it has air flowing "along it" and not "through" it. *See* Tr. (Pokharna) at 1261:21-24, 1295:21-23.

Williams and Yare disclose heat exchangers, fails to provide persuasive support for the narrow interpretation and application of "heat exchanger" that MRI proposes. *See* Tr. (Pokharna) at 1295:21-23 (Yare discloses a heat exchanger); CIB at 165 (Yare "comprises one corrugated plate separating air flow in the sealed zone 30 and atmospheric zone 40"); CRB at 84 (Yare "discloses a corrugated plate generally separating two airflow pathways").

Accordingly, the evidence clearly and convincingly shows that Karppanen discloses this claim element.[103]

(vi) *Claim elements [1e]]: "a gas circulation device positioned to force circulating gas through the common heat exchanger"*

The parties dispute two aspects of this claim limitation. The first dispute is whether Karppanen discloses the claimed "heat exchanger." RIB at 112-118; CIB at 152-155. As discussed above, the undersigned concludes that the cooling elements 32 in Karppanen correspond to the claimed heat exchanger.

The parties also dispute whether Karppanen, to the extent it discloses a heat exchanger, discloses circulating gas being forced "through" the heat exchanger as required by the claim. According to MRI, even if the cooling elements 32 in Karppanen are the claimed "heat exchanger," the gas is not forced "through" the heat exchanger as required by the claim. CIB at 154 (citing Tr. (Pokharna) at 1255:13-25). This is because, according to MRI, the POSITA would understand in the context of the '740 patent that traveling through requires the use of a heat exchanger that contains a plurality of channels/pathways/tubes for the ambient air and for

[103] Respondents argue, in addition, that claim 1 would also be rendered obvious in view of Karppanen and Williams if a definition of "common heat exchanger" and/or "through the common heat exchanger" were adopted "that requires some dedicated channel or overlapping plates specific to the embodiments shown in the '740 patent.". RIB at 120. The undersigned has not adopted that claim construction here, and accordingly does not address this scenario.

the closed loop air. CIB at 154 (citing Tr. (Pokharna) at 1248:11-23. But in Karppanen, MRI argues, the gas or air travels along the fins of the cooling element 32 embedded in a wall. *Id.* (citing Tr. (Pokharna) at 1255:14-25). Respondents argue that Karppanen discloses that air travels "between" the fins in Karppanen and that air flowing "between" the fins is flowing "through" the heat exchanger. *See* RIB at 118-120.

No party sought construction of the term "through" and thus it has its plain and ordinary meaning. Based on the evidence of record, the undersigned finds that the plain and ordinary meaning of "through" encompasses air flowing between fins, and the evidence shows the circulating gas (and ambient gas) in Karpannen flowing between the fins in their respective airflow pathways. *See* Tr. (Smith-Gillespie) at 1001:23-1002:11; RDX-0007.0099-101; Karpannen at 8:17-19 ("cooling air flows between the fins"), 9:3-8; Figs. 2-4. Dr. Pokharna's testimony that the air flowing between the fins is not flowing "through" them is unpersuasive and inconsistent with the plain and ordinary meaning of "through." *See* Tr. (Pokharna) at 1255:19-25.[104] Moreover, Dr. Pokharna agreed on cross-examination that ambient air in Karppanen was passing "through" second heat transfer part 62, which comprises cooling fins. *See* Karppanen at 8:14-17; Tr. (Pokharna) at 1275:11-15.[105]

Accordingly, the undersigned concludes that Respondents have proven, by clear and convincing evidence, that Karppanen discloses this claim element.

---

[104] Figures 3 and 4 of Karpannen, for example, show openings between fins where air can pass through. *See* Karpannen and Figs. 3 and 4; *id.* at 10:32-36; Tr. (Smith-Gillespie) at 1001:1-5. The '740 patent similarly uses the word "through" to, for example, describe air passing through an aperture. *See* '740 patent at 7:49-50 (describing flow of gas "through" an "inlet aperture"); *see also id.* at 4:51 (discussing travel "through the pathways of the adjacent plates").

[105] Dr. Pokharna also agreed that ambient air moving between certain external fin structures in the Heady reference (addressed during prosecution for the related '287 patent) was flowing "through the external fins." Tr. (Pokharna) at 544:12-16; *id.* at 542:20-544:16; *id.* at 545:1-546:14; RX-19 at Figs. 3, 6.

(vii) *Claim element [1f]: an air circulation device positioned to force ambient air through the common heat exchanger.*

The disputes regarding this claim element are the same as that for claim element [1e]. *See* CIB at 154. For the reasons discussed above, the evidence clearly and convincingly shows that Karppanen discloses this claim element.

Accordingly, the undersigned concludes that Respondents have proven, by clear and convincing evidence, that Karppanen discloses this clement.

***

Respondents have proven, by clear and convincing evidence, that Karppanen discloses every element of claim 1 of the '740 patent. Further, secondary considerations of obviousness do not weigh against an obviousness finding. *See* Part VIII.G *infra*. Accordingly, the evidence clearly and convincingly shows that claim 1 of the '740 patent is anticipated and obvious.[106]

b. Yare

(i) *Motion to Strike*

MRI has moved to strike certain testimony by Mr. Smith-Gillespie concerning Yare as being outside the scope of his expert report and to strike certain arguments by Respondents

[106] MRI further argues that Karppanen is cited on the face of the patent, thereby weighing against it as invalidating prior art. *See* CIB at 148, 151. The undersigned has taken this into account and finds that the evidence meets the clear and convincing standard, including given the examiner's own broad approach to the term "through the common heat exchanger." *See* RIB at 114. With respect to the Karppanen reference, MRI only disputes whether Karppanen discloses a "heat exchanger" with air flowing "through" it. *See* CIB at 151-55. The examiner's views on these terms appear inconsistent with MRI's, and any other reason the examiner may have had for declining to reject this claim over Karppanen has not been asserted by MRI. Moreover, in instituting an *Inter Partes Review* proceeding on the '740 patent (including claims 1 and 5) in view of Karppanen (and Yare), the PTAB stated that "Petitioner has shown the Examiner's failure to appreciate the disclosure of these features [an open loop ambient air flow path and a closed loop gas circulation path] in Karppanen and in Yare constitutes Office error in a manner material to patentability of the challenged claims." *See* EDIS Doc. ID 799022, Ex. 4, at 68.

concerning Yare as being outside the scope of their prehearing brief. CIB at 155-162.[107] MRI argues that Respondents provided a new contention regarding Yare's "alleged teaching of the 'electronic image assembly' and 'closed loop' elements, including testimony from Mr. Smith-Gillespie that different from and was outside the scope of his expert report (CX-2588C)[108] and Respondents' Pre-Hearing Brief." CIB at 155. MRI argues that Respondents' original contentions regarding the location of "reference number 20" changed, that the identification of the "front portion" and "rear portion" of the asserted electronic image assembly changed, and that this change affects "the location of the alleged closed loop relative to the electronic image assembly," affecting the analysis of claim 1 of the '740 patent and claim 6 of the '142 patent. *Id.* at 156-57. MRI asserts that Mr. Smith-Gillespie's original opinions were contrary to Yare's teachings, "so he chose to drop this contention at the hearing in favor of vague and unsupportable testimony that does not actually show how Yare teaches the recited closed loop as claimed." *Id.* at 159. MRI seeks an order striking Mr. Smith-Gillespie's testimony, including "at least at 995:10-15, 1017:5-1031:22, 1102:24-[1]110:2 and demonstratives and exhibits discussed therein." *Id.* at 162.

Respondents argue that MRI's motion to strike is at least overly broad because MRI only argues that Mr. Smith-Gillespie provided new contentions regarding the "electronic image assembly" and "closed loop" and yet seeks to strike all of Mr. Smith-Gillespie's testimony concerning Yare. RIB at 63. Respondents argue that, with respect to the placement of the "electronic image assembly," Mr. Smith-Gillespie "never opined that the location of the LCD

---

[107] MRI's motion to strike regarding objected-to testimony on Yare by Mr. Smith-Gillespie was discussed at the hearing and permitted. *See* Order No. 35.

[108] Mr. Smith-Gillespie's expert report, identified as CX-2588C and RX-256C, were filed on EDIS. EDIS Doc. ID 806414, 806370.

was limited to" the "exemplary demonstrative in his report" and opined in his report that "a POSITA in 2008 would know that the LCD in Yare is placed within the cabinet at least some distance away from the front of the cabinet." *Id.* at 63-64 (citing RX-0256C ¶¶ 1252-1253); *see also id.* at 65 (citing Tr. (Smith-Gillespie) at 1026:4-13 as consistent with the report). Respondents further argue that Mr. Smith-Gillespie did not change his opinion regarding the "front portion" and "rear portion" of the "electronic image assembly" as recited in claim element 1[a] and that "[t]he front portion is the front of the LCD panel, wherever it may be placed within the display portion of the cabinet, and rear portion is the rear of the LCD, i.e., the backlight." *Id.* (citing RX-0256C ¶¶ 0256C, ¶¶ 1242-43). Respondents argue that Mr. Smith-Gillespie has consistently provided his opinion that certain "solid arrows" show "airflow within the sealed zone."

Upon review of the testimony at issue and Mr. Smith-Gillespie's expert report, the undersigned finds that Mr. Smith-Gillespie's testimony should be stricken in part.[109]

First, Mr. Smith-Gillespie's testimony regarding the location of the claimed "electronic image assembly having a front portion and a rear portion" (claim element [1a]) is materially different in comparison to his expert report. In Mr. Smith-Gillespie's expert report, he identified the claimed "electronic image assembly" as "display 20" that "may be an LCD display." He further identified the claimed "front portion" and "rear" portion of the "electronic image display" as the front and rear portions of an "LCD display." CX-2588C ¶¶ 1240-1242. He further stated that the front surface of "display 20" is spaced apart from the front surface of cabinet 10, "to allow circulation air through the gap between the front of the display 20 and the front surface of

[109] Regardless of whether Mr. Smith-Gillespie's testimony is stricken, however, the evidence does not clearly and convincingly show obviousness in view of Yare, as discussed *infra*.

the cabinet 20, as indicated by the L-shaped arrows in original Figure 4." *Id.* Mr. Smith-Gillespie illustrated this by reference to the following annotated Figure 4:

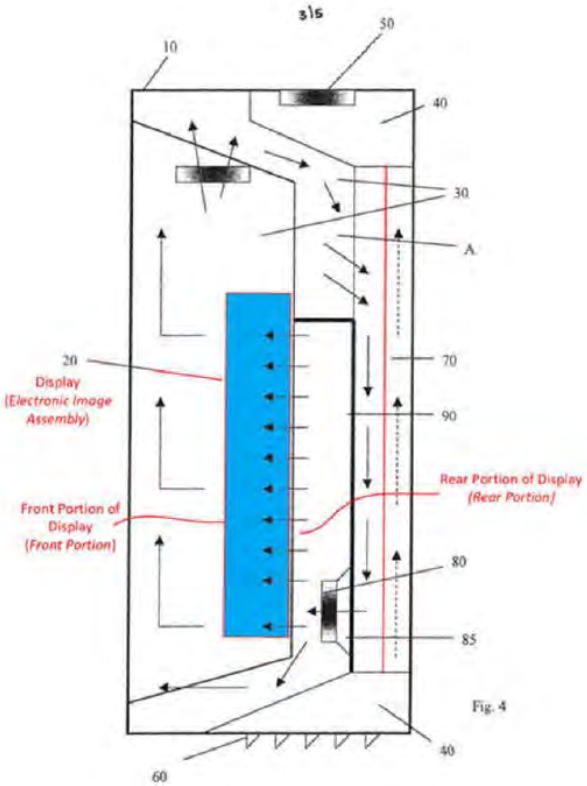

CX-2588C.461.

At the evidentiary hearing, however, Mr. Smith-Gillespie identified a different area of Figure 4 as the claimed "electronic image assembly," as well as at least a different "front portion," as shown in the following demonstrative:

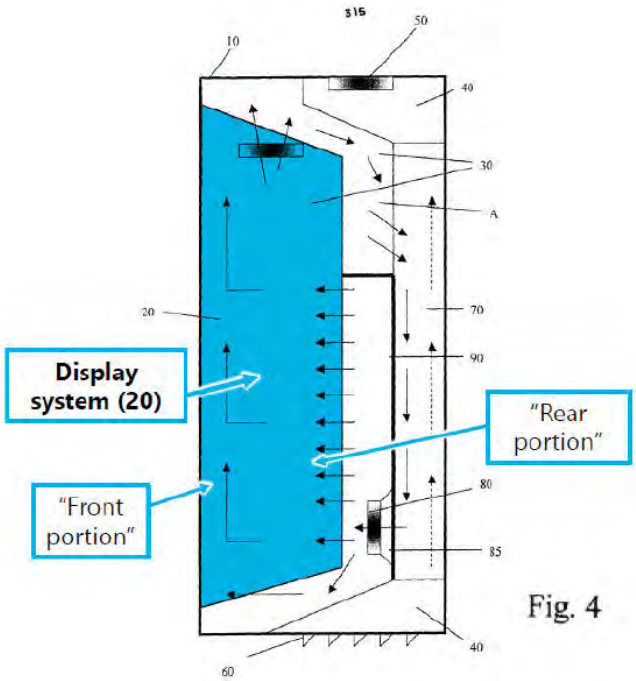

Fig. 4

RDX-0007.00129. *See* Tr. (Smith-Gillespie) at 1018:2-9, 1021:25-1022:4 (identifying "display system 20 as the "electronic image assembly," identifying the "highlighted blue zone" of slide 129 as "display 20," and pointing to this demonstrative as showing the claimed "front portion" and "rear portion"). This mapping is different from that of Mr. Smith-Gillespie's expert report, at least because he identifies a different portion of the Figure as "display 20" and because in his expert report, Mr. Smith-Gillespie claimed that the "front portion" of the claimed "electronic display" was spaced apart from the front of cabinet 10, whereas at the hearing the front portion of "Display system (20)" as identified in the demonstrative extends to the front of cabinet 10.[110] Accordingly, Mr. Smith-Gillespie's testimony regarding the location of this claim element,

[110] Regardless of whether there is a distinction between "display system 20 and "display 20," Mr. Smith-Gillespie's mapping of the claimed "electronic image assembly" changed between his expert report and his hearing testimony.

together with demonstrative RDX-0007.00129, is stricken. *See* Tr. (Smith-Gillespie) at 1021:25-1022:4; CIB at 155-156. *See* Ground Rule 11.6.3.

With respect to Mr. Smith-Gillespie's testimony regarding the asserted "closed loop" in Yare and its location, the testimony at 1022:19-1023:1 is not inconsistent with the expert report as it identifies the same closed loop circulation path as the expert report. However, the testimony at 1023:10-16 is stricken as it seeks to relate the position of the "closed loop gas circulation path" to "display system 20" in connection with the claim limitation "a closed loop gas circulation path about the electronic image assembly." See Tr. (Smith-Gllespie) at 1023:10-16; RDX-0007.00131. As discussed above, in his expert report, Mr. Smith-Gillespie mapped the claimed "electronic image assembly" to a differently identified "display 20" than in his hearing testimony and associated demonstrative, and emphasized the existence of a "space between the front surface of the display 20 and the front surface of the Cabinet 20" when discussing this claim element. *See* CX-02588 ¶¶ 1249-1257:

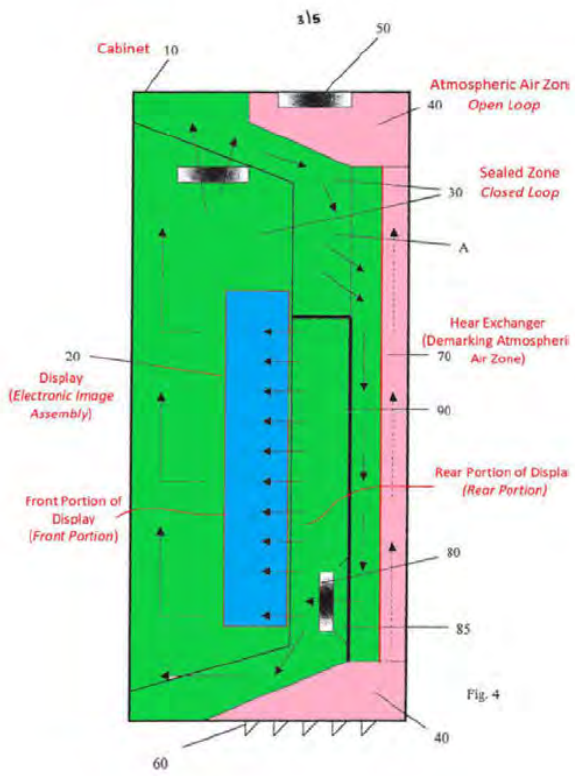

CX-2588C.465, ¶ 1253.

Mr. Smith-Gillespie's testimony at trial, which relies on RDX-0007.00131 shows the L-shaped arrows differently situated with respect to the asserted "electronic image assembly."

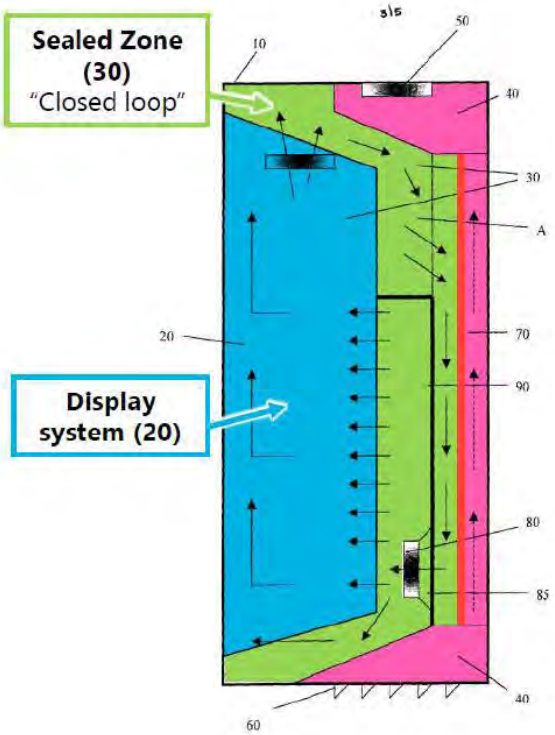

Fig. 4

RDX-0007.00131.

Accordingly, Mr. Smith-Gillespie's testimony at 1023:10-16 and associated demonstrative RDX-0007.00131 is stricken.

Claim 5 of the '740 patent requires a "front channel defined by the space between the front display surface and the front portion of the electronic image assembly." With respect to this claim element, Mr. Smith-Gillespie's testimony is substantially consistent with his expert report. In both, he identifies the claimed front display surface as a front surface of cabinet 10, and opines that the front surface of an LCD would be spaced behind that front surface and that "solid arrows that have the right-angle bend on them would be passing along the front of the display." *See* Tr. (Smith-Gillespie) at 1025:16-1026:20; RDX-0007.00136; CX-3588C ¶¶ 1285-

1288. Accordingly, Mr. Smith-Gillespie's testimony with respect to the added limitation of claim 5 is not stricken.

For claims 6 and 10 of the '142 patent, Mr. Smith-Gillespie relied in relevant part on his analysis for the '740 patent (*see* Tr. at 1027:7-13), and thus any analysis stricken for purposes of the '740 patent will not be relied upon for the '142 patent. MRI's objections to other portions of Mr. Smith-Gillespie's testimony are not persuasive and are denied.

For the reasons set forth above, MRI's motion is strike is GRANTED-IN-PART and DENIED-IN-PART. Mr. Smith-Gillespie's testimony at 1022:19-1023:1 and 1023:10-16 is stricken, together with RDX-0007.00129 and RDX-0007.00131. MRI's motion to strike is otherwise denied.[111]

(ii) *Claim element [1pre]: An electronic display comprising:*

There is no dispute that the preamble is met by Yare. *See* CIB at 162-166. In addition, no party has argued that the preamble is limiting. *See generally* Updated Joint Claim Construction Statement (EDIS Doc. ID 792078).

(iii) *Claim element [1a]: an electronic image assembly having a front portion and a rear portion;*

The evidence of record shows, clearly and convincingly, that this limitation is met. Although Mr. Smith-Gillespie's testimony on this limitation was stricken, MRI does not dispute that this limitation is met. *See* CIB at 162-166. Further, Complainant's expert, Dr. Pokharna, agreed that Yare "discloses an electronic image assembly having a front and a rear portion." Tr.

[111] The undersigned notes that Mr. Smith-Gillespie's other demonstratives also include his new mapping of the "electronic image assembly." These demonstratives are not stricken but will not be relied upon for showing the location of the electronic image assembly.

(Pokharna) at 1297:9-14. Yare itself identifies "display system 20" and references "a rear portion 35 of the display 20." Yare, at 4:1-2, 4:7-9, Fig. 1

(iv) *Claim element [1b]: an open loop ambient air flow path behind the rear portion of the electronic image assembly;*

There is no dispute that Yare discloses an electronic display assembly comprising an open loop ambient air flow path behind the rear portion of the electronic image assembly. RIB at 131; CIB at 162-166. Yare discloses cabinet 10 with fans 50 that draw atmospheric air in through vents 60 through the atmospheric air zone 40, (Yare at 4:11-16, 4:24-27), and Respondents contend the atmospheric air zone 40 is the claimed "open loop." The evidence of record shows, by clear and convincing evidence, that Yare discloses this claim element.[112]

(v) *Claim element [1c]: a closed loop gas circulation path about the electronic image assembly;*

The evidence fails to show, clearly and convincingly, that Yare discloses a "closed loop gas circulation path about the electronic image assembly." The parties agree that "sealed zone (30)" depicted in Yare Fig. 4, together with the arrows showing air flow, discloses a closed loop gas circulation path. *See* Tr. (Smith-Gillespie) at 1022:19-1023:1; Tr. (Pokharna) at 1295:2-1295:20 (agreeing that in Yare's Fig. 4, the "solid arrows show movement of air in the sealed zone 30" and that this airflow "is a closed loop of isolated gas").

The parties disagree as to whether this closed loop occurs "about the electronic image assembly." Respondents argue that that the L-shaped arrows of Fig. 4 flow "in front of the display," such that the "flow of air within the sealed zone 30 encircles the display 20." RIB at 131-132. Respondents further argue that "a POSITA would have understood that a part of the

[112] Aspects of this demonstrative (and any other demonstrative shown) are not relied upon with respect to Respondents' identification of the claimed "electronic image assembly."

airflow occurs in the front of the display 20, and that the display 20 does not abut the front surface of cabinet 10, but rather, is spaced apart from the front surface." MRI argues, in contrast, that Yare "merely indicates that air flows through the fully formed display product, but does not reveal sufficient information regarding the direction of that air and whether it passes between a front glass and an LCD panel." CIB at 153 (citing Tr. (Pokharna) at 1259:7-1260:4, *id.* at 1260:5-17.

The evidence does not show, clearly and convincingly, that Yare discloses a closed loop gas circulation path "about the electronic image assembly." Yare identifies "display 20" of Fig. 1 as follows:

Fig. 1

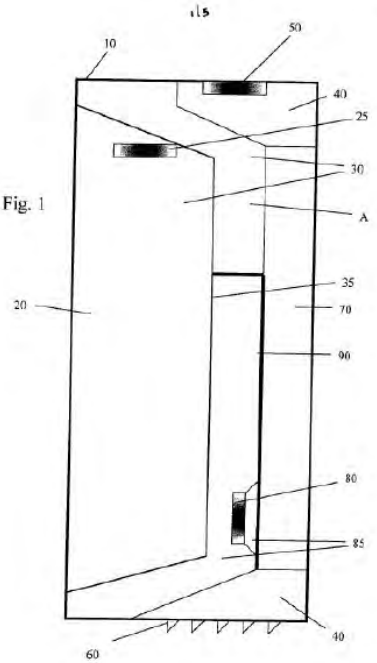

Yare, Fig, 1.

Yare also shows the circulation of air within the "sealed zone 30" (which includes the area depicted as "20") in Fig. 4:

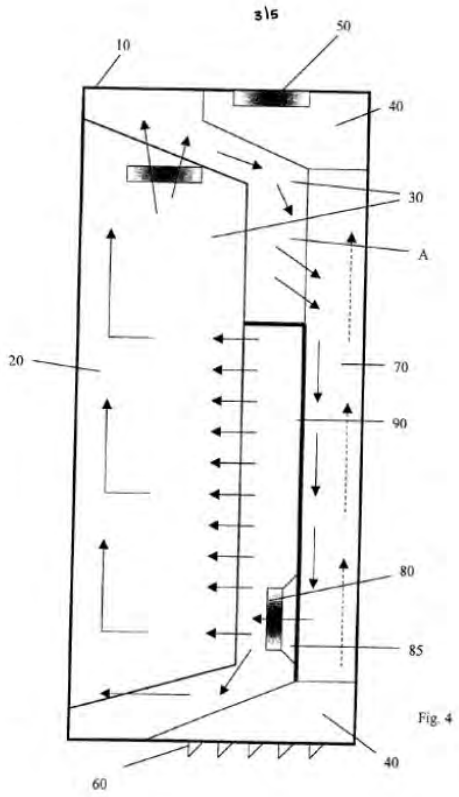

Yare, Fig. 4.

Yare explains that "[a]ir is circulated within the sealed zone 30 due to operation of the fans 80 within the cabinet ***and fans 25 within the display 20***." Yare at 5:1-2 (emphasis added). Yare further states that the circulation of air is "aided by a standard ***internal cooling system of the display 20***." *Id.* at 5:15-20. These portions of the specification support Dr. Pokharna's testimony that that Yare does not clearly and convincingly disclose a closed loop gas circulation path "about the electronic image assembly" but rather one within the electronic image assembly. Tr. (Pokharna) at 1257:20-1261:16; CDX-12 at 42-47.[113] Rather, as Dr. Pokharna explains, Yare

[113] No party identified the term "about" as requiring claim construction, and both parties appear to assume that the term "about the electronic image assembly" requires a pathway that encircles the display and

is consistent with an interpretation that "the L-shaped arrows are showing the flow of air through the display, not around the display." Tr. (Pokharna) at 1260:13-17. Respondents' arguments and evidence do not clearly and convincingly show otherwise.[114]

Respondents also argue that, to the extent this claim element is not disclosed in Yare, placing the display spaced apart from the front glass of the cabinet was "well known" in the art, citing to three prior references. RIB at 132-133 (citing Heady (RX-1383), Pandolfi (RX-1389) at 2:9-12, 2:34-37, 2:44-47 Fig. 3, and Larson (RX_1386) at 1:22-28, Fig. 1); Tr. (Smith-Gillespie) at 1027:25-1027:6. However, the evidence does not clearly and convincingly show a reason to modify Yare to include such a space. Respondents' expert merely stated that there is "other prior art showing displays spaced apart from the front surface of their cabinets." Tr. (Smith-Gillespie) at 1026:25-1027:6; RDX-0007.00136. This assertion falls far short of providing a clear and convincing reason to combine these references to achieve the claimed limitation. *See* CRB at 86-87.

(vi) *Claim element [1d]: a common heat exchanger located in the pathway of both the closed loop gas circulation path and the open loop ambient air flow path;*

There is no dispute that Yare discloses this claim element. RIB at 133-134; CIB at 162-166 (referring to "Yare's heat exchanger"). Yare discloses "heat exchanger 70" between the asserted open loop airflow path and the asserted closed loop airflow path, (Yare (RX-1398) at

---

would not be met by a closed loop pathway inside or "within" the electronic display assembly. *See* RIB at 131-133. This is consistent with the intrinsic evidence. *See, e.g.*, '740 patent at Figs. 2A and 2B; *id.* at 6:31-48. Moreover, although Yare states that air "circulates *around* the display 20" (Yare at 5:16-17) the context of the sentence (as discussed above) strongly indicates that this is circulation inside display 20, not a gas pathway that encircles the display.

[114] Moreover, even if the claimed "electronic image assembly" were set back from the front of cabinet 10, the evidence does not show clearly and convincingly that there would be a closed loop airflow path "about the electronic image assembly" rather than simply an air gap.

6:7-11, Figs. 5, 6). The evidence clearly and convincingly shows that Yare discloses this claim element.

(vii) *Claim element [1e]: a gas circulation device positioned to force circulating gas through the common heat exchanger; and*

The parties dispute this claim element. In Yare the fans 80 circulate air within the sealed zone 30 and "passes across one or more other surfaces of the heat exchanger 70." Yare (RX-1398) at 4:18-19, 5:1-2,4:29-33; Figs. 1, 4; *see also* Yare at 5:4-7 (air is "directed along one or more surfaces of the heat exchanger 70"). The configuration of the heat exchanger is shown in Fig. 5 of Yare:

Fig. 5

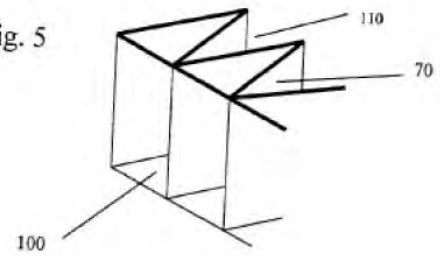

MRI disputes that this claim element is met, arguing that circulating gas travels "along" the heat exchanger of Yare, and not "through" it. MRI argues that the word "through" requires "enclosed channels or tubes" which are absent in Yare. CIB at 165. Respondents argue that the plain meaning of "through" encompasses such movement "along" the heat exchanger, and that this is consistent with the prosecution history. *See* RIB at 136.

The evidence shows that this limitation is met. Dr. Pokharna agrees that the Yare heat exchanger comprises "channels." Tr. (Pokharna) at 1296:6-8. MRI's position that air flowing in these "channels" is only flowing "along" channels and not "through" the channels is inconsistent with the plain and ordinary meaning of the word. *See* Tr. (Smith-Gillespie) at 1025:3-10.

(viii) *Claim element [1f]: an air circulation device positioned to force ambient air through the common heat exchanger.*

Figure 4 of Yare depicts the claimed air circulation device consisting of the fans 50 that draw air from outside the cabinet into the atmospheric zone (the open loop) and the air is expelled from the cabinet, (Yare (RX-1398) at 4:11-16, Fig. 4)). For the same reasons discussed for claim element [1e], the evidence does not clearly and convincingly show that Yare discloses this clement.

***

For the reasons set forth above, the evidence does not clearly and convincingly show that claim 1 of the '740 patent is obvious in view of Yare.

2. Claim 5

a. Karppanen

(i) *"The electronic display of claim 1, further comprising: a front display surface spaced apart from the front portion of the electronic image assembly; and a front channel defined by the space between the front display surface and the front portion of the electronic image assembly, the front channel forming part of the closed loop gas circulation path."*

There is no dispute that Karppanen discloses an electronic display comprising a front display surface spaced apart from the front portion of the electronic image assembly; and a front channel defined by the space between the front display surface and the front portion of the electronic image. RIB at 122; CIB at 151-155. Mr. Smith-Gillespie testified that Karpannen discloses these elements. *See* Tr. (Smith-Gillespie) at 1007:15-1008:12; RDX-0007.00107.

Accordingly, the undersigned concludes that Respondents have proven, by clear and convincing evidence, that Karppanen discloses this claim element. Regarding objective indicia of nonobviousness, MRI did not make any arguments that apply to claim 5 but not to claim 1, and so for the same reasons the undersigned finds that the evidence of objective indicia is

insufficient to indicate non-obviousness. The evidence clearly and convincingly shows that claim 5 is obvious (and anticipated) in view of Karppanen.

b. Yare

(i) *"The electronic display of claim 1, further comprising: a front display surface spaced apart from the front portion of the electronic image assembly; and a front channel defined by the space between the front display surface and the front portion of the electronic image assembly, the front channel forming part of the closed loop gas circulation path."*

There is no dispute that Yare does not explicitly disclose this claim element. RIB at 137; CIB at 162-163. Respondents assert that the POSITA "would have understood the display surface to be spaced apart from the front of the cabinet in Yare," and alternatively "would have known this to be a common configuration in the art, as disclosed by references such as Larson, Pandolfi, and Heady." RIB at 137. MRI asserts that Larson "does not reflect general knowledge that electronic displays are spaced apart from the front glass for the passage of cooling gas." CIB at 164. MRI further asserts that Larson discloses some LCD panels that are spaced apart from the front glass as well as some LCD panels that are not spaced apart from the front glass but rather are bonded to the front glass to reduce reflectance. CIB at 164 (citing Larson (RX-1386) at 1:39-46). In response, Respondents assert that Larson disparages the latter arrangement because it "tends to affect the uniformity of the liquid crystal cell gap, induces difficulty in repairs, and is associated with other problems due to the aging effects and shrinkage of the adhesive." RRB at 68 (citing Larson (RX-1386) at 1:44-49).

As discussed above, the evidence does not clearly and convincingly show the elements of claim 1 are met, and therefore for that reason alone claim 5 of Yare is also not obvious. Further, for the reasons discussed above regarding claim element [1c], the evidence does not clearly and

convincingly show that that Yare discloses a front display surface spaced apart from the front glass of the cabinet.

Respondents argue that, to the extent this is not disclosed in Yare, placing the display spaced apart from the front glass of the cabinet was "well known" in the art, citing to three prior references. RIB at 132-133 (citing Heady (RX-1383), Pandolfi (RX-1389) at 2:9-12, 2:34-37, 2:44-47 Fig. 3, and Larson (RX_1386) at 1:22-28, Fig. 1); Tr. (Smith-Gillespie) at 1027:25-1027:6. As discussed above in relation to element [1c], the evidence does not clearly and convincingly show a clear and convincing reason to combine these references to achieve the claimed limitation.

***

For the foregoing reasons, Respondents have proven by clear and convincing evidence that Karppanen renders obvious claim 5 of the '740 patent but have not proven by clear and convincing evidence that Yare renders obvious claim 5 of the '740 patent.

F. The '142 Patent

Respondents contend that claims 6 and 10 of the '142 patent are invalid for obviousness in view of the Karppanen reference (RX-1351) and the Larson reference (RX-1386). RIB at 122. Respondents also contend that claims 6 and 10 are obvious in view of Yare (RX-1398) and Larson. RIB at 137-138.

1. Claim 6

a. Karppanen

(i) *Claim element [6pre]: A cooling system for an electronic image assembly, the cooling system comprising:*

There is no dispute that the preamble is met by Karppanen. *See* CIB at 166-168. In addition, no party has argued that the preamble is limiting. *See generally* Updated Joint Claim Construction Statement (EDIS Doc. ID 792078).

(ii) *Claim element [6a]: A housing for the electronic image assembly;*

There is no dispute that Karppanen discloses this claim element. RIB at 123; CIB at 168-169. For the reasons discussed above regarding claim element 1[a] of the '740 patent and claim element 12[a] of the '287 patent, the evidence clearly and convincingly shows that Karppanen discloses this claim element.

(iii) *Claim element [6b]: A transparent cover panel forming a front portion of the housing, the transparent cover panel located forward of, and at least some distance from, the electronic image assembly;*

There is no dispute that Karppanen discloses this claim element. RIB at 123; CIB at 166-169. The evidence shows that Karppanen discloses a transparent front plate 46, which satisfies this claim element. Tr. (Smith-Gillespie) at 1010:8-18. The evidence clearly and convincingly shows that Karppanen discloses this claim element.

(iv) *Claim element [6c]: An open loop airflow pathway passing through the housing behind the electronic image assembly;*

There is no dispute that Karppanen discloses this claim element. RIB at 123-124; CIB at 166-169. Respondents relied on the same arguments and evidence for this claim element as for claim element 1[b] of the '740 patent.

For the reasons discussed regarding claim element 1[b] of the '740 patent, Respondents have proven by clear and convincing evidence that Karppanen discloses this claim element.

(v) *Claim element [6d]: A closed loop gas circulation pathway contained within the housing, wherein a portion of the closed loop gas circulation pathway passes between said transparent cover panel and said electronic image assembly;*

There is no dispute that Karppanen discloses this claim element. RIB at 123-124; CIB at 166-169. Respondents relied on the same arguments and evidence for this claim element as for claim element 1[c] and claim 5 of the '740 patent.

For the reasons discussed regarding claim element 1[c] and claim 5 of the '740 patent, Respondents have proven by clear and convincing evidence that Karppanen discloses this claim element.

(vi) *Claim element [6e]: an inlet located at a first portion of said housing for ingesting ambient air into said open loop airflow pathway;*

There is no dispute that Karppanen discloses this claim element. RIB at 124; CIB at 166-169. Karppanen discloses ventilator slots 34, which constitute the claimed "inlet." Tr. (Smith-Gillespie at 1011:6-12); Karppanen (RX-1351) at 7:16-22, Fig. 1. Respondents have proven by clear and convincing evidence that Karppanen discloses this claim element.

(vii) *Claim element [6f]: an exhaust located at a second portion of said housing for exhausting said ambient air from said open loop airflow pathway;*

There is no dispute that Karppanen discloses this claim element. RIB at 124; CIB at 166-169. Karppanen discloses ventilator slots 34, which constitute the claimed "exhaust." Tr. (Smith-Gillespie) at 1011:6-12; Karppanen (RX-1351) at 7:16-22, Fig. 1. Respondents have proven by clear and convincing evidence that Karppanen discloses this claim element.

(viii) *Claim element [6g]: an air circulation device positioned along said open loop airflow pathway between said inlet and said exhaust, wherein said air circulation device is configured to force said ambient air through the open loop airflow pathway when activated;*

There is no dispute that Karppanen discloses this claim element. RIB at 124; CIB at 166-169. Karppanen discloses cooling fans 36, which constitute the claimed "air circulation device." Tr. (Smith-Gillespie) at 1011:13-1012:2; Karppanen (RX-1351) at 7:16-22, Fig. 1. Accordingly, the evidence clearly and convincingly shows that Karppanen discloses this claim element.

(ix) *Claim element [6h]: a gas circulation device positioned along said closed loop gas circulation pathway to force circulating gas around the closed loop gas circulation pathway when activated;*

There is no dispute that Karppanen discloses this claim element. RIB at 124; CIB at 166-169. As set forth in the testimony of Mr. Smith-Gillespie, Karppanen discloses fans 64, which constitute the claimed "gas circulation device." Tr. (Smith-Gillespie) at 1012:3-10. Accordingly, the evidence clearly and convincingly shows that Karppanen discloses this claim element.

(x) *Claim element [6i]: a heat exchanger located rearward of the electronic image assembly, wherein a first portion of said heat exchanger forms part of said open loop airflow pathway, and wherein a second portion of said heat exchanger forms part of said closed loop gas circulation pathway; and*

The parties dispute the "heat exchanger" claim element. RIB at 124-125; CIB at 166-169. Respondents assert that Karppanen discloses this claim element based on the same arguments and evidence given for claim element 1[d] of the '740 patent. RIB at 124-125. MRI asserts this claim element is not disclosed based on the same reasoning and evidence provided for claim element 1[d] of the '740 patent. CIB at 166-167.

For the reasons discussed above for claim element 1[d] of the '740 patent, Respondents have proven by clear and convincing evidence that Karppanen discloses this claim element.

(xi) *Claim element [6j]: one or more solar energy reduction layers located at said transparent cover panel, wherein each of said one or more solar energy reduction layers is configured to prevent a portion of solar energy entering said transparent cover panel from thermally interacting with the circulating gas at said portion of said closed loop gas circulation pathway passing between said transparent cover panel and said electronic image assembly or thermally interacting with said electronic image assembly.*

There is no dispute that Karppanen does not disclose the claimed solar energy reduction layer; the dispute between the parties is whether Karppanen in view of Larson (RX-1386) renders it obvious. RIB at 125-130; CIB at 166-168.

Respondents assert that solar energy reduction layers were well-known by 2008 and their use was a matter of routine design choice in the outdoor display field. RIB at 125. Respondents further assert that the POSITA would have been "well aware of the benefits of using a solar energy reduction layer in connection with an electronic display, including improvement in display contrast and in reducing heat load on a display." *Id.* (citing Tr. (Smith-Gillespie) at 1009:9-17). Respondents rely on the Larson reference (RX-1386), which discloses a conventional polarized display 2 having a cover glass 4 with antireflective coating 6, a front polarizer 8, and a rear polarizer 16, to support these assertions. RIB at 126 (citing Larson (RX-1386) at 1:22-27, Fig. 1). Respondents point to Larson's "auxiliary polarizer 20," which is located on the rear of cover glass 4 of Larson's display 2, as the claimed "one or more solar energy reduction layers" because it is "configured to prevent a portion of solar energy entering said transparent cover panel from thermally interacting" with the gas beyond the polarizer. Respondents argue that, based on Larson, the POSITA would have been motivated to modify Karppanen to add a solar energy reduction layer, such as a polarizer, on the inner surface of

Karppanen's cover panel, in order to reduce heating of the LCD and improve daytime display contrast and reduce reflections. RIB at 126. Respondents further argue that, given the wide use of polarizers and the simplicity of adding polarizers to glass, the POSITA would have a reasonable expectation of success in making this modification. *Id.* at 128 (citing Tr. (Smith-Gillespie) at 1015:19-25).

MRI argues that the POSITA would not be motivated to combine Larson with Karppanen because Larson is related to reducing unwanted reflections in electronic displays, whereas Karppanen is related an electronic information board used by advertisers to pass on information. CIB at 167. MRI further argues that Karppanen already solved the issue of thermal regulation of its information board, and so the POSITA would not be motivated to include any additional thermal regulation or airflow features. *Id.* Finally, MRI argues that the POSITA would not have seen an issue with internal reflection in Karppanen and therefore would not have sought a reference in the optical field. *Id.* at 168. MRI argues that modifying Karppanen, which is directed to thermal regulation of an outdoor display, according to Larson, which is directed to reducing reflectance of a display, requires impermissible hindsight. CRB at 88.

The evidence of record shows, clearly and convincingly, that one of ordinary skill in the art would have reason to modify Karppanen to add a solar energy reduction layer, such as a polarizer, on the inner surface of Karppanen's cover panel. Mr. Smith-Gillespie testified that one of ordinary skill in the art would have been aware of the benefits of using a solar energy reduction layer, including improving display contrast and reducing the heat load on the display. Tr. (Smith-Gillespie) at 1009:9-17; *id.* at 1015:2-7 (stating benefits of improved contrast, reduction of heat on the LCD, and reduced reflectances from using aa polarizer laminated to the rear of the cover panel). Moreover, although a reason to combine need not be shown in the

references themselves, here the Karppanen and Larson references themselves indicate the importance of display contrast and heat reduction. *See, e.g.*, Karpannan at 1:19-21 (noting benefits of "good contrast" in a display); *id.* at 2:17-29 (noting issue of heat from displays); Larson (RX-1386) at 1:60-64 (noting benefits of the invention in providing reduced reflectances for "high contrast output"); *id.* at 1:10-13 (noting problem of maintaining "high contrast output at high ambient illumination levels"); *KSR Intern'l Co. v. Teleflex Inc.,* 550 U.S. 398, 420 (2007) ("any need or problem known in the field of endeavor at the time of invention and addressed by the patent can provide a reason for combining the elements in the manner claimed").

MRI's arguments are not persuasive. MRI argues that there would be no reason to combine the references because "Larson is in the field of optics" while "Karppanen is in the field of thermal management." Tr. (Pokharna) at 1264:23-1265:1-4; CIB at 167. To the extent MRI seeks to argue that Karppanen and Larson are not analogous art for purposes of an obviousness analysis, this is unpersuasive, as the patent and both references address the field of electronic displays. *See* Karppanen (RX-1351) at 3:20-23 ("The invention relates to an electronic information board comprising a frame, a flat display element, such as a TFT LCD display or plasma display for displaying information, and electronic equipment for controlling the display element."); Larson (RX-1386) at 2L24-25 ("The subject matter of the present invention is particularly suited for use in connection with displays, such as LCDs."); '142 patent at 1:60-62 (exemplary embodiments relate to "cooling systems for electronic displays"); *id.* at 2:34-37 (discussing need for a cooling system for "electronic displays which are placed within environments having high ambient temperatures . . . and even placed in direct sunlight."); RIB at 129-130; *cf. Samsung Elec. Co., Ltd. v. UUSI, LLC*, 775 Fed. Appx. 692, 695 (Fed. Cir. June 18, 2019) (reference was analogous art where "directed to the same field of endeavor (i.e., capacitive

touch device design)" as the asserted patent); *In re Bigio*, 381 F.3d 1320 (Fed. Cir. 2004) (finding that prior art toothbrush references were in the same field of endeavor as hair brush patent).

MRI also argues that Karppanen had already solved the issue of thermal regulation, and thus would not be motivated to include any additional thermal regulation features. Tr. (Pokharna) at 1264:16-22; CIB at 167. However, Dr. Pokharna did not dispute Mr. Smith-Gillepsie's testimony that one of ordinary skill in the art would have been aware that using a solar energy reduction layer would have reduced the heat load on the display. MRI's logic, without more, contradicts *KSR*'s guidance that "if a technique has been used to improve one device, and a person of ordinary skill would recognize that it would improve similar devices in the same way, using the technique is obvious unless its actual application is beyond his or her skill." *KSR*, 550 U.S. at 417.[115]

Mr. Smith-Gillespie further testified that one of ordinary skill would have had a reasonable expectation of success, as the technique was "well known in a number of areas" and the technique was "very straightforward." Tr. (Smith-Gillespie) at 1015:19-1016:5. This testimony is undisputed and MRI does not argue that there would be no reasonable expectation of success.

---

[115] MRI also notes that both Larson and Karppanen are cited on the face of the '142 patent. CIB at 167. As set forth by the Federal Circuit, the "clear and convincing burden applies to all issued patents," but the "the fact that references were previously before the PTO goes to the weight the court or jury might assign to the proffered evidence." *Sciele Pharma Inc. v. Lupin Ltd.*, 684 F.3d 1253, 1259-1261 (Fed. Cir. 2012). Here, for the reasons set forth above, the clear and convincing standard has been met. Moreover, in instituting an *Inter Partes Review* proceeding on the '142 patent (including claims 6 and 10) in view of Karppanen (and Yare) and Larson, the PTAB stated that "Petitioner has shown the Examiner's failure to appreciate the disclosure of such features [an open loop airflow pathway passing through the housing behind the electronic assembly" and "a closed loop gas circulation pathway contained within the housing] in Karppanen and in Yare constitutes Office error in a manner material to patentability of the challenged claims." *See* EDIS Doc. ID 799022, Ex. 3, at 76.

Accordingly, the evidence of record clearly and convincingly shows a reason to combine the solar energy reduction layers of Larson with the electronic display of Karppanen to achieve this limitation of the '142 patent, with a reasonable expectation of success.

***

As discussed above, the evidence shows clearly and convincingly that one of ordinary skill in the art would have had reason to combine Karppanen and Larson to obtain the claimed invention of claim 6 of the '142 patent, with a reasonable expectation of success. Moreover, secondary considerations of non-obviousness do not weigh significantly against this finding. *See* Part VIII.G *infra*. Accordingly, the evidence clearly and convincingly shows that claim 6 of the '142 patent is invalid as obvious.

b. Yare

(i) *Claim element [6pre]: A cooling system for an electronic image assembly, the cooling system comprising:*

There is no dispute that the preamble is met by Yare. *See* CIB at 166-168. In addition, no party has argued that the preamble is limiting. *See generally* Updated Joint Claim Construction Statement (EDIS Doc. ID 792078).

(ii) *Claim element [6a]: A housing for the electronic image assembly;*

There is no dispute that Yare discloses this claim element. *See* CIB at 168-169. In Yare, the cabinet 10 is the claimed housing. Yare (RX-1398) at 4:4-9, Fig. 2. The evidence clearly and convincingly shows that this claim element is met. .

(iii) *Claim element [6b]: A transparent cover panel forming a front portion of the housing, the transparent cover panel located*

forward of, and at least some distance from, the electronic image assembly;

The parties dispute whether Yare discloses this claim element. *See* RIB at 138; CIB at 168. Respondents rely on the same arguments for this limitation as for element 1[c] and claim 5 of the '740 patent. *See* RIB at 138.

For the reasons set forth above for the '740 patent, the evidence fails to clearly and convincingly show that this limitation, in combination with Claim element [6d], is met.

(iv) *Claim element [6c]: An open loop airflow pathway passing through the housing behind the electronic image assembly;*

There is no dispute that Yare discloses this claim element. RIB at 138-139; CIB at 168. Respondents relied on the same arguments and evidence for this claim element as for claim element 1[b] of the '740 patent. For the reasons discussed above for claim element 1[b] of the '740 patent, the evidence clearly and convincingly shows that Yare discloses this claim element.

(v) *Claim element [6d]: A closed loop gas circulation pathway contained within the housing, wherein a portion of the closed loop gas circulation pathway passes between said transparent cover panel and said electronic image assembly;*

The parties dispute this claim element. RIB at 138-139; CIB at 168. MRI and Respondents rely on the same arguments and evidence as they relied on for claim element 1[c] and claim 5 of the '740 patent. *Id.*

For the reasons discussed above for claim element 1[c] and claim 5 of the '740 patent, the evidence fails to clearly and convincingly show that Yare discloses this claim element.

(vi) *Claim element [6e]: an inlet located at a first portion of said housing for ingesting ambient air into said open loop airflow pathway;*

There is no dispute that Yare discloses this claim element. RIB at 139; CIB at 168. In Yare, vents draw in outside air into the atmospheric zone, and therefore constitute the claimed

"inlet." *See* Tr. (Smith-Gillepsie) at 1028:10-23; Yare (RX-1398) at 4:11-16, Figs. 1-4. The evidence clearly and convincingly shows that this claim element is met.

(vii) *Claim element [6f]: an exhaust located at a second portion of said housing for exhausting said ambient air from said open loop airflow pathway;*

There is no dispute that Yare discloses this claim element. RIB at 139; CIB at 168. In Yare, the fans 50 expel air from the cabinet's atmospheric zone, and therefore has the claimed "exhaust." See Tr. (Smith-Gillespie) at 1028:10-23; Yare (RX-1398) at 4:11-16, Figs. 1-4. The evidence clearly and convincingly shows that this claim element is met.

(viii) *Claim element [6g]: an air circulation device positioned along said open loop airflow pathway between said inlet and said exhaust, wherein said air circulation device is configured to force said ambient air through the open loop airflow pathway when activated;*

There is no dispute that Yare discloses this claim element. RIB at 139-140; CIB at 168. In Yare, the fans 50 constitute the claimed "air circulation device." The fans 50 draw air from outside the cabinet, through the atmospheric zone (the claimed open loop airflow pathway), and the air is expelled through the exhaust. *See* Tr. (Smith-Gillespie) at 1028:24-1029:15; Yare (RX-1398) at 4:11-16, Figs. 1-4. The evidence clearly and convincingly shows that this claim element is met.

(ix) *Claim element [6h]: a gas circulation device positioned along said closed loop gas circulation pathway to force circulating gas around the closed loop gas circulation pathway when activated;*

There is no dispute that Yare discloses this claim element. RIB at 140; CIB at 168. In Yare, the fans 80 constitute the claimed "gas circulation device." The fans 80 are positioned within the sealed zone, *i.e.* "along" the closed loop gas circulation pathway, and force circulating gas around the closed loop gas circulation pathway. Tr. (Smith-Gillespie) at 1029:16-24; RDX-

0007.0144; Yare (RX-1398) at 5:1-2, Figs. 1, 4. The evidence clearly and convincingly shows that this claim element is met.

(x) *Claim element [6i]: a heat exchanger located rearward of the electronic image assembly, wherein a first portion of said heat exchanger forms part of said open loop airflow pathway, and wherein a second portion of said heat exchanger forms part of said closed loop gas circulation pathway; and*

There is no dispute that Yare discloses this claim element. RIB at 140; CIB at 168-169. The undisputed testimony of Mr. Smith-Gillespie establishes that Yare discloses heat exchanger 70 within the asserted closed loop and open loop pathways. *See* RIB at 140; Tr. (Smith-Gillespie) at 1029:25-1030:5; RDX-0007.00145; Yare (RX-1398) at 6:7-11, Figs. 5, 6. The evidence clearly and convincingly shows that this claim element is met.

(xi) *Claim element [6j]: one or more solar energy reduction layers located at said transparent cover panel, wherein each of said one or more solar energy reduction layers is configured to prevent a portion of solar energy entering said transparent cover panel from thermally interacting with the circulating gas at said portion of said closed loop gas circulation pathway passing between said transparent cover panel and said electronic image assembly or thermally interacting with said electronic image assembly.*

The analysis for Yare is similar to that for Karppanen. There is no dispute that Yare does not disclose this claim element. RIB at 140-141; CIB at 168-169. Respondents assert obviousness over Yare in view of Larson based on the same reasons as Respondents assert obviousness over Karppanen in view of Larson. RIB at 140. With regard to Yare, Mr. Smith-Gillespie testified that one of ordinary skill in the art would have been motivated to add a solar energy reduction layer, such as that disclosed by Larson, to Yare's cabinet in order to achieve "reduced heat load, better display contrast, [and] reduced reflectances." Tr. (Smith-Gillespie) at 1030:10-16. He also testified that one of ordinary skill would have a reasonable expectation of success in doing so. *Id.* at 1030:17-24.

In opposition, Dr. Pokharna testified that there would be no reason to modify Yare to include the claimed solar energy reduction layers because "Yare claims to have already solved the problem of thermal management of electronic displays," and because Larson and Yare "are in two separate fields. Yare is talking about thermal management whereas Larson is about optics." Tr. (Pokharna) at 1266:17-1267:5; *see also* CIB at 168-169.

For the same reasons discussed above regarding Karppanen, Respondents' arguments are persuasive.[116] The evidence clearly and convincingly shows that one of ordinary skill in the art would have reason to modify Yare to include the solar-reduction layers of Larson, and with a reasonable expectation of success. However, because the evidence does not show that claim element [6d] is met, the evidence fails to clearly and convincingly show obviousness of claim 6.

***

For the reasons discussed above, the evidence fails to clearly and convincingly show that claim 6 of the '142 patent is obvious in view of Yare and Larson.

2. Claim 10

a. Karppanen

(i) *"The cooling system of claim 6 wherein: at least one of said one or more solar energy reduction layers comprise a film having anti-reflection properties."*

There is no dispute that Karppanen does not disclose this claim element, and so the dispute between the parties is over whether Karppanen in view of Larson renders it obvious. RIB at 128-129; CIB at 166-168. Respondents argue that the polarizer of Larson (discussed

[116] Like Karppanen, Larson, and the '142 patent, Yare addresses electronic displays. *See* RX-1398.0007:4-12 (describing present invention "suitable for use in providing large scale displays in public places" and discussing "[l]arge scale electronic image and/or video display systems" in background of the invention).

above with respect to claim 6) is disclosed as potentially including material with anti-reflection properties and explains reasons for adding this layer. *See* RIB at 128-129; RX-1386 at 1:34-36, 4:9-13. MRI does not dispute the disclosures of Larson, but argues (as with claim 6) that there would be no reason to modify Karppanan to include the claimed solar energy reduction layer. See CIB at 167-168. For the reasons discussed above regarding claim 6, MRI's arguments are not persuasive.

Accordingly, and for the reasons discussed above with respect to claim 6, the evidence clearly and convincingly shows that claim 10 is obvious in view of Karppanen and Larson.

Yare

(ii) *"The cooling system of claim 6 wherein: at least one of said one or more solar energy reduction layers comprise a film having anti-reflection properties."*

There is also no dispute that Yare does not disclose this claim element, and thus the dispute between the parties is over whether Yare in view of Larson renders it obvious. RIB at 140-141; CIB at 168-169. Respondents assert that the POSITA would have been motivated to add the solar energy reduction layer and anti-reflection film to Yare's display for the same reasons given with respect to the combination of Karppanen and Larson. RIB at 141. MRI does not provide any additional counterargument other than that provided for claim 6. CIB at 168-169. The evidence shows clearly and convincingly that one of ordinary skill would have reason to combine Yare with Larson to obtain the claimed film having anti-reflection properties with a reasonable expectation of success, as discussed above in relation to claim 6.

However, because claim 6 is not obvious in view of Yare, claim 10 is also not obvious in view of Yare.

G. Secondary Considerations of Nonobviousness

MRI has argued that there are certain secondary considerations which show the nonobviousness of the asserted claims. MRI argues that there is evidence of long-felt need, failure of others, copying, industry praise, and commercial success. CIB at 170-76. Respondents argue that MRI has either failed to prove that these exist or failed to show a nexus between the claims at issue and these alleged secondary considerations. RIB at 141-46. For the reasons set forth below, the evidence of record shows that secondary considerations of nonobviousness are not entitled to significant weight.

1. Long-felt but unsolved need, failure of others

MRI argues that there was a long-felt but unsolved need addressed by "[t]he novel features of the Asserted Patents" and that Samsung's experience shows failure of others. CIB at 170-73. MRI argues that using large LCD displays outdoors posed difficulties because indoor designs could not work in outdoor conditions. CIB at 170; Tr. (Credelle) at 1188:4-16. MRI also argues that there is evidence of "failure of others" because Samsung began its development of outdoor LCD displays around [redacted], but did not achieve a working product until [redacted], when it released a product [redacted]. CX-1917C (Kim Dep. Tr.) at 45:22-46:21, 47:9-22. Samsung's first outdoor display that did not use refrigeration, the OHD series, was released between 2013 and 2016, and MRI states that the product [redacted]. *Id.* at 49:9-17; 51:1-9.

Respondents argue that there is no evidence of long-felt need or failure by others. RIB at 143-45. Respondents argue that there is nothing in the '595 patent and the '322 patent that limits them to outdoor displays. *Id.* at 143. Respondents also argue that the only evidence presented of long-felt need is an expert's testimony, which is not sufficient. RRB at 73. Respondents

contend that there is no evidence that [redacted] along on the timeline set forth by MRI, nor is there evidence that the [redacted] because those products [redacted] the [redacted]. RRB at 73-74.

The undersigned finds that the asserted evidence of long-felt but unsolved need and failure of others is not entitled to weight in the obviousness analysis. "[L]ong-felt need is analyzed as of the date of an articulated identified problem and evidence of efforts to solve that problem." *Texas Instruments, Inc. v. U.S. Int'l Trade Comm'n*, 988 F.2d 1165, 1178 (Fed. Cir. 1993); *see also In re Kavanagh,* 851 F. App'x 1028, 1035 (Fed. Cir. 2021) ("we have said that long-felt need involves a showing of an articulated identified problem and evidence of efforts to solve that problem") (internal quotation marks omitted). Conclusory testimony, without supporting evidentiary support, may be accorded little weight. *See In re Depomed, Inc.*, 680 F. App'x 947, 953 (Fed. Cir. 2017) (affirming assignment of little weight to inventor testimony regarding long-felt need without citing evidentiary support). Moreover, a showing of a "long-felt but unsolved need" does not exist where the alleged long-felt need was already addressed in the prior art. *See Nike, Inc. v. Adidas AG*, 955 F.3d 45, 54-55 (Fed. Cir. 2020) (affirming lack of showing of long-felt need where the alleged long-felt need of making cutting waste less expensive was already addressed by prior art); *Asyst Techs. v. Emtrak, Inc.*, 544 F.3d 1310, 1316 (Fed. Cir. 2008) (affirming district court's finding of obviousness where evidence of long-felt need and industry praise failed to show that these were attributable to the only material difference between the prior art and patented invention).

Here, the MRI's evidence regarding a long-felt need is based primarily on the testimony of Mr. Credelle and Dr. Pokharna. *See* CIB at 170-173. Mr. Credelle's testimony provided little evidentiary support for his testimony regarding a long-felt need and, at most, indicated a need for

"large screens that could be put outdoors." Tr. (Credelle) at 1188:20-24; *see also id.* at 1189:1-21. The evidence of record fails to show that this was an "unsolved" need given that the prior art (for example, Karppanen and Yare) disclosed screens for outdoor use, including cooling systems for them. *See* Karppanen (RX-1351) at 3:10-15 (describing an "objective of the invention" to provide "an electronic information board. . . suitable for installation outdoors"); Yare (RX-1398), at 1:4-6 ("The present invention relates to a cabinet for mounting a display system . . . which is particularly suitable for use in providing large scale displays in public places."); *see* RIB at 143. Moreover, the claims of at least the '595 and '322 patents are not limited to outdoor displays, or to "large" displays. *See ABT Sys., LLC v. Emerson Elec. Co.*, 797 F.3d 1350, 1362 (Fed. Cir. 2015) (rejecting argument of long-felt need that "ignores the scope of claim 1, which does not set forth limits on how long or how often periodic fan operation is to be performed"); *Therasense, Inc. v. Becton, Dickinson & Co.*, 593 F.3d 1325, 1336 (Fed. Cir. 2010) (rejecting evidence of long-felt but unsolved need addressed to "short-fill" problem where the claims were not limited to devices that solved this problem); Tr. (Credelle) at 1212:7-9 ('595 and '322 patents do not require outdoor displays); *id.* at 1213:2-4 ('595 and '322 patents do not limit size of the display). Dr. Pokharna's testimony was conclusory and also did not support a finding of long-felt but unsolved need. *See* Tr. (Pokharna) at 1229:20-1230:15.

Similarly, the evidence regarding "failure by others" is unpersuasive. MRI argues that Samsung failed to develop an outdoor electronic display [redacted]. *See* CIB at 172. However, MRI acknowledges that Samsung produced a "working outdoor electronic display product" in 2010-2012, and another outdoor electronic display product (the "OHD" product, with almost [redacted] in sales in [redacted]) several years later. The fact that Samsung had [redacted], without more, does not persuasively show "failure by others."

See RRB at 74. In addition, as noted above, the prior art disclosed outdoor displays and cooling systems for them.

Accordingly, the evidence of long-felt need and failure of others is entitled to little or no weight.

2. Copying

MRI also argues that there is evidence of copying because Samsung [redacted], and then released its own allegedly infringing products. CIB at 172-73 (citing evidence). In support MRI cites a document relating to a [redacted] (CX-1786C), as well as photos showing [redacted] (CX-1787C), with a witness testifying at deposition that these activities occurred around [redacted] based on the date on the cover of CX-1786C. *See* CX-1908C (Lee Dep. Tr.) at 184:15-191:2. MRI contends that Mr. Lee's testimony at the hearing that the [redacted] actually occurred [redacted], and after finalization of the design of Samsung's products, should be rejected. CRB at 91-92. MRI contends that "[t]he integration of MRI's intellectual property—[redacted] and disclosures in patents on the MRI label—led to success of the OHF series and all models that came after . . . ." CIB at 173.

Respondents contend that [redacted] occurred in [redacted]. RIB at 144. At the hearing, Mr. Lee testified that the date on the cover of CX-1786C is incorrect, because the MRI label attached to the product, shown in one of the photographs included in the document, indicated it was not manufactured until [redacted]. Tr. (Lee) at 611:23-612:5; CX-1786.00069. Mr. Lee testified that Samsung's large-format display was fully designed by the [redacted]. Tr. (Lee) at 612:11-13. Mr. Lee also testified

that the CX-1786 slide deck shows [redacted], and that these indicate that [redacted] at the time the document was made. *See* Tr. (Lee) at 613:14-614:18. Samsung also argues that its OH85F product had been brought to market and sold before Samsung's review of the [redacted] and that MRI thus cannot show that [redacted]. RIB at 145 (citing CX-1728C, which Respondents state show sales of [redacted]).

Upon review of the evidence of record, MRI has not persuasively shown that Samsung sought to replicate any MRI product features, which is required for a finding of copying. *See Iron Grip Barbell Co., Inc. v. USA Sports, Inc.*, 392 F.3d 1317, 1325 (Fed. Cir. 2004) ("Not every competing product that arguably falls within the scope of a patent is evidence of copying. Otherwise every infringement suit would automatically confirm the nonobviousness of the patent. Rather, copying requires the replication of a specific product"). In addition, the undersigned finds probative the photograph of an [redacted] that is contained within the [redacted] and Mr. Lee's testimony regarding the data for the [redacted] contained in that report. *See* CX-1786C.00065, .00069.[117] The alleged evidence of record regarding copying does not carry significant weight.

[117] The evidence also indicates that performing a tear-down of another company's product is not unusual. *See* Tr. (Dunn) at 159:10-24 (discussing MRI teardowns of Samsung products).

3. Industry Praise

MRI argues that there is evidence of industry praise for MRI's products, which embody the Asserted Patents. CIB at 173-74; *see also* discussion above.[118] MRI points to an email from Samsung SDS America which praises MRI as evidence of this, as well as an email in which Samsung said it was looking for a partner in outdoor enclosures. *See id.* (citing CX-0440C and CX-0442C).[119] According to MRI's expert, this email allegedly relates to the patented technologies that enabled its products' high performance. Tr. (Pokharna) at 1235:2-10. MRI also identifies alleged evidence of praise from Vertigo of MRI. CIB at 174 (citing JX-0052C).[120] In reply, MRI argues that the praise relates to the cooling system because Mr. Brown allegedly testified that all of MRI's products since 2008 practice the Asserted Claims of the Asserted Patents. CRB at 93 (citing Tr. (Brown) at 262:3-24).

Respondents argue that there is no evidence that this praise has a nexus to the Asserted Patents, and therefore it does not support a finding of nonobviousness. RIB at 146. Respondents also argue that Mr. Dunn's testimony that he had spoken to Samsung multiple times before the email from Samsung is false. *Id.*

The undersigned finds that the evidence of praise is entitled to little or no weight. The praise identified by MRI is generic praise for MRI, not tied to any specific features, technology,

---

[118] Because MRI did not contend that its products practice asserted claim 8 of the '595 patent or asserted claims 8, 12, and 13 of the '322 patent, the evidence does not show that these claims are embodied by the MRI products.

[119] MRI also cites CX-0441C. CIB at 173. CX-0441C was not admitted and is not on the final list of admitted exhibits, and therefore will not be considered. *See* Complainant's Revised Final Exhibit Lists, EDIS Doc. ID 801515.

[120] MRI also cites JX-0053C. CIB at 174. JX-0053C was not admitted and is not on the final list of admitted exhibits, and therefore will not be considered. *See* Final Joint Exhibit Lists, EDIS Doc. ID 800751.

or products. CX-0440C; JX-0052C. The undersigned is unpersuaded by Dr. Pokharna's conclusory testimony that this praise can attributed to technology claimed in each of the five Asserted Patents. *See* Tr. (Pokharna) at 1235:2-10. The Federal Circuit has explained that evidence of praise "must . . . be linked to the patented invention." *Geo. M. Martin*, 618 F.3d at 1305 (rejecting alleged evidence of praise that was unrelated to the patented features). The undersigned is also unpersuaded that Mr. Brown's testimony establishes the praise is related to the patented features, as his testimony does not discuss the praise or explain how it is tied to the patented features. *See* Tr. (Brown) at 262:3-24. Because there is no evidence that any praise is tied to any specific MRI products, let alone to the technology in the Asserted Claims of the Asserted Patents, the praise is entitled to little, if any weight. Even if the praise could be tied to a specific product, there is no evidence it is tied to the patented technology. Nor is there a basis to presume a nexus, for the reasons discussed below.

4. Commercial Success

MRI argues that the commercial success of its own products and Samsung's products is tied to the novel aspects of the Asserted Patents. CIB at 174-75. Mr. Credelle testified that in his opinion, that commercial success of these products is attributable to the improved cooling systems. Tr. (Credelle) at 1190:13-1191:12. MRI presented evidence of its sales from 2018-2022, CX-1108C, and Mr. Brand, its Chief Financial Officer, testified about these sales. Tr. (Brand) at 215:2-218:6. Mr. Brand also testified that MRI's revenue has increased since 2008. *Id.* at 218:7-13. MRI argues that this increase is due to the novel aspects of the Asserted Patents. MRI also argues that Samsung's sales of its Accused Products and growth of its market share are evidence of commercial success. CIB at 175 (citing CX-1728C; CX-1719C.0029). MRI argues that the patented technology is a key selling point of Samsung for its products. *Id.* at 175-76.

And MRI argues that because the DI Products and Accused Products practice the Asserted Claims, there is a presumption of nexus between their commercial success and the Asserted Claims. *Id.* at 176.

Respondents argue that MRI has failed to prove a nexus between the Accused Products and DI Products and the Asserted Claims. RIB at 141. Respondents argue that there is no evidence that the Accused Products are coextensive with the Asserted Claims, and therefore there is no presumption of nexus. *Id.* at 141-42. Respondents also argue that there is no evidence that the sales are attributable to the features of the Asserted Patents. *Id.* at 142. They argue that Mr. Credelle's opinion is not sufficient, and that he did not consider whether other factors contributed to any commercial success. *Id.* Finally, Respondents argue that because there is no evidence about the size of the market, evidence of sales cannot establish commercial success. *Id.* at 142-43.

Although MRI has shown that the DI Products and Accused Products are commercially successful, this evidence is entitled to little weight because the evidence does not show a nexus between this success and the asserted claims of the Asserted Patents. MRI has argued that a nexus can be presumed; however, MRI has failed to meet its burden to establish such a presumption because it has not shown that these products are coextensive with the asserted claims of the Asserted Patents. *Brown & Williamson Tobacco Corp. v. Philip Morris Inc.*, 229 F.3d 1120, 1130 (Fed. Cir. 2000) (" if the marketed product embodies the claimed features, and is coextensive with them, then a nexus is presumed and the burden shifts to the party asserting obviousness to present evidence to rebut the presumed nexus"). MRI's only argument in its initial post-hearing brief was that the DI Products and Accused Products "practice and embody" the Asserted Claims of the Asserted Patents. CIB at 176. It did not argue that the Accused

Products or Asserted DI Products are "coextensive" with the Asserted Patents, which is a necessary showing to establish the presumption of nexus should apply. *Fox Factory, Inc. v. SRAM, LLC*, 944 F.3d 1366, 1374-75 (Fed. Cir. 2019) (explaining that the presumption of nexus only applies when the product is "coextensive" with the patent). MRI presented no argument in its initial post-hearing brief that its products were coextensive, nor any expert testimony. This is not sufficient. *See Volvo Penta of the Ams., LLC v. Brunswick Corp.*, 81 F.4th 1202, 1211 (Fed. Cir.) (holding that a single sentence argument in a brief and expert testimony that did not address coextensiveness were insufficient to meet the patentee's burden of establishing a nexus). MRI argued in its reply brief that "common-sense and logic support" a finding of co-extensiveness. CRB at 94.

The evidence does not show that the asserted claims are coextensive with the Accused Products and Asserted DI Products. *See Fox Factory*, 944 F.3d at 1373 (explaining that the patentee bears the burden of proving coextensiveness). Coextensiveness requires more than a showing that the claims cover a product practices the patents. *Id.* at 1377 ("We reject SRAM's attempt to reduce the coextensiveness requirement to an inquiry into whether the patent claims broadly cover the product that is the subject of the evidence of secondary considerations."). Whether a product is coextensive with the patent depends on, among other things, the significance of unclaimed features. *Id.* at 1374-75. All that MRI has shown is that the claims cover some of these products. But the evidence shows that both the Asserted DI Products and Accused Products have significant unclaimed features. Respondents have presented evidence of unclaimed features of the Accused Products, such as screen brightness. *See* RIB at 142; RRB at 71-72; Tr. (Credelle) at 1224:19-23; JX-0172C.0005 (describing *inter alia* 3,500nit brightness, Auto Brightness Sensor, and Magic Glass as "main feature"); JX-0156C.0002, 8-11 (discussing

Remote control, and Afterimage Burn-in prevention, among others); JX-0173C.0005; JX-206C.0007, 28-32 (discussing *inter alia* anti-vandalism protection). Mr. Dunn admitted that there are numerous unclaimed features of MRI's Asserted DI Products other than the cooling system which are important to customers and help to drive sales. RX-1420C (Dunn Dep. Tr.) at 312:4-314:22, 316:16-321:4. Nor do "common sense and logic" support a finding of coextensiveness. *See* CRB at 94. The Asserted Patents are focused on cooling systems. The cooling systems are not the only feature of these products the Asserted DI Products and the Accused Products, and there are numerous unclaimed features.[121] MRI has therefore failed to meet its burden of showing coextensiveness, and thus there is no presumption of nexus.

MRI has also not shown that a nexus exists independently of a presumption. *See Volvo Penta*, 81 F.4th at 1211 ("We may also consider whether the patent owner proved a nexus independently of a presumption."). The primary evidence of nexus is Mr. Credelle's opinion that the patented features drive sales. CIB at 174 (citing Tr. (Credelle) at 1190:13-1191:12). The undersigned finds that Mr. Credelle's testimony is conclusory and unsupported by any accompanying documentation, and therefore not sufficient to establish a nexus. *See In re Cree, Inc.*, 818 F.3d 694, 703 (Fed. Cir. 2016) (affirming finding of no nexus where expert declaration "in conclusory fashion, that there is a nexus"). MRI also argued that the cooling system is "use[d] as a key selling point" by Samsung for its products. CIB at 175 (citing JX-0172C at 17471, JX-0173C, JX-0156C; JX-0206C at 27763-66). The evidence cited by MRI does not persuasively show the patented features drive sales. Few of these materials are marketing

[121] Moreover, for at least the asserted claims of the '595 and '322 patents, MRI has presented evidence indicating that the claims which Respondents assert are invalid do not claim the entire cooling systems of the Asserted DI Products or the infringing Accused Products (such as, *e.g.*, the ambient air channel of the Accused Samsung Large-Sized Products, or the closed loop and/or heat exchanger of the Asserted DI Products). *See* Tr. (Pokharna) at 510:5-513:16; CDX-0007C at 58, 136-140.

materials, and none shows that commercial success was driven by the patented features, let alone features not present in the prior art. *See ABT Sys.*, 797 F.3d at 1362 ("commercial success of the product must be due to the merits of the claimed invention beyond what was readily available in the prior art") (quoting *J.T. Eaton & Co. v. Atl. Paste & Glue Co.*, 106 F.3d 1563, 1571 (Fed. Cir. 1997)); *Asyst Techs.*, 544 F.3d at 1316 (evidence of commercial success carried little probative weight where patentee failed to link this success to features not disclosed in the prior art); *see also Magsels FF LLC v. Seabed Geosolutions (US) Inc.*, 860 F. App'x 746, 751 (Fed. Cir. 2021) ("[w]ithout the presumption, a patentee may establish nexus by showing the secondary considerations evidence is the direct result of the unique characteristics of the claimed invention, rather than a feature that was known in the prior art") (internal quotation marks and citations omitted).[122] MRI also cited evidence from Mr. Palmer which it argues shows that "the Accused Samsung Products were requested by customers (and believed to by Palmer to be superior) because of their built in cooling systems." CIB at 176 (citing CX-1902C (Palmer Dep. Tr.) at 118:6-119:8)). Mr. Palmer's testimony does not indicate whether it is the patented features of the cooling system, as opposed to other aspects of the liquid crystal display, that creates the desirable effect, and there is no evidence to clarify that. *See* CX-1902C (Palmer Dep. Tr.) at 118:6-119:8. In sum, MRI's evidence does not persuasively show a nexus between the commercial success of the Accused Products or Asserted DI Products and the asserted claims.

[122] As discussed *supra*, the prior art discloses a cooling system comprising a constricted convection plate (in, *e.g.*, Kim (RX-1396)); it also discloses a cooling system comprising the combination of a closed loop and open loop (in, *e.g.*, Karppanen (RX-1351)).

Because MRI has not shown a nexus between the commercial success of the Accused Products or Asserted DI Products and the patented features, this evidence is entitled to no significant weight.

***

For these reasons, the evidence of secondary considerations of nonobviousness are entitled to little, if any, weight.

H. Improper Inventorship

Respondents assert that the '595 and '322 patents are invalid under 35 U.S.C. § 102(f) for improper inventorship for failing to name Christopher Bolton and/or Dwayne Gavel as a joint inventor. RIB at 146. Respondents argue that while each of those patents lists William Dunn as the sole inventor, he "did not contribute to the conception of the cooling system claimed in at least claim 9 of the '595 patent" and he did not "conceive of all elements of the liquid crystal display," including the brackets covered by at least claims 1 and 5 of the '322 patent. *Id*. at 146-47, 169-70.

For the reasons discussed below, the evidence fails to clearly and convincingly show improper inventorship as to the '595 and '322 patents.

1. Factual Background

Mr. Dunn, the president and CEO of MRI, founded MRI in 2004. *See* Tr. (Dunn) at 42:20-25. MRI designs, fabricates, assembles, manufactures, and globally supports outdoor LCD displays. *See id*. at 43:9-12. Around 2006 through 2007, APC[123] and MRI designed and

[123] APC stands for American Panel Corporation, which was formed by Mr. Dunn and was a display module component manufacturer. *See* Tr. (Dunn) at 46:1-18.

sold various outdoor LCD displays, including gasoline pump-top displays and carwash display products. *Id*. at 47:3-14, 54:13-63:9; Tr. (Williams) at 169:18-24.

Mr. Dunn testified that, in September 2007 during a business trip to Korea, he called his prosecution counsel and stated: "I've got this hair-brained idea I'm calling the air-to-air intercooler." *See* Tr. (Dunn) at 63:10-64:11. Mr. David Williams[124] further testified that, around that same time, Mr. Dunn also told him that he had a "great idea" to "use an air-to-air cooling system." *See* Tr. (Williams) at 172:3-16. On November 27, 2007, Mr. Dunn sent an email to his prosecution counsel that Mr. Dunn stated related to that same idea. *See* Tr. (Dunn) at 64:12-65:5. In that email, Mr. Dunn refers to "another cooling scheme" he wants to patent that he characterizes as "the 'air-to-air' intercooler." *See* JX-0315C at 2; Tr. (Dunn) at 63:10-66:14. Mr. Dunn states in the email that the idea "came to me will [*sic*] asleep in Korea a few weeks back." *See* JX-0315C at 2. The email further states that "[t]he idea is to have a closed loop air circulation over the face of the display, and then cool this closed loop with out side [*sic*] air." *Id*. Thereafter, with the assistance of Rick Pisano (a mechanical design contractor for MRI), Mr. Dunn created a CAD file dated November 29, 2007 and titled "new file from bill" that Mr. Dunn testified was a three-dimensional CAD model, which reflected the ideas that were in Mr. Dunn's November 27, 2007 email. *See* Tr. (Dunn) at 66:20-68:14.

In addition, APC had begun working with [redacted] *See* Tr. (Dunn) at 54:13-24; CDX-002C at 2. [redacted] *See* Tr. (Dunn) at 54:25-55:4. [redacted]

[124] Mr. Williams, who is currently retired, began working for MRI in January 2007 as Vice President of Engineering and Chief Technical Officer. *See* Tr. (Williams) at 167:20-168:8.

[redacted] *See* CX-1117C; CX-1118C; Tr. (Dunn) at 72:24-74:10. [redacted] *See* CX-1118C at 1.

Vertigo Group, Inc. ("Vertigo") was cofounded by Mr. Bolton and Ralph Idems and used enclosures in shopping malls, train stations and other high foot traffic areas to house advertising digital displays. *See* Tr. (Bolton) at 797:4-801:22; JX-0021C.00001. Mr. Gavel worked for Vertigo as an independent contractor. Tr. (Gavel) at 887:11-16, 888:14-889:23. In November 2007, Vertigo responded to a request for proposal (RFP) from a company called Outdoor Promotions to provide digital displays for transit shelters located on the streets of Las Vegas. *See* Tr. (Bolton) at 805:9-806:17; *see also* RX-0444C at 6. Vertigo was awarded the contract in late November 2007. Tr. (Bolton) at 812:19-23.

In December 2007, Vertigo was introduced to MRI as a possible supplier for LCD screens. *See* Tr. (Bolton) at 813:13-814:24. MRI and Vertigo executed a non-disclosure agreement (NDA) on December 19, 2007. *Id.* at 815:24-816:7; RX-0443C. Also on December 19, 2007, Vertigo employees, including Mr. Bolton, and MRI employees, including Mr. Dunn, met at MRI's facility in Georgia to discuss technical details regarding the Outdoor Promotions project. Tr. (Bolton) at 814:19-815:4. At that meeting, Vertigo and MRI agreed to work together on the Outdoor Promotions project. *Id.* at 819:1-3. Vertigo would design and build the enclosure for the display prototype, including the air-conditioner cooling system. Tr. (Dunn) at 78:1-79:24. MRI would provide its own "high-bright displays" and the cover glass. *Id.* at 78:20-80:15.

The prototype produced by Vertigo and MRI for the Outdoor Promotions project was displayed at the Digital Signage Expo at the end of February 2008. Tr. (Bolton) at 847:23-848:21. At the Digital Signage Expo, Vertigo displayed a PowerPoint presentation, which included the following slide:

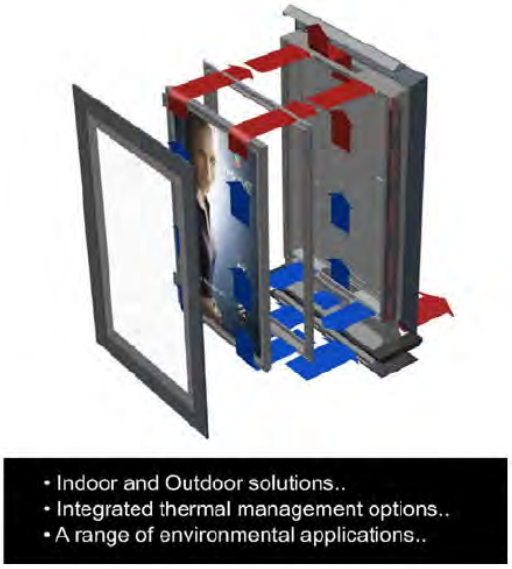

RX-0762C.0004 ("Vertigo Figure 1"); Tr. (Bolton) at 848:22-849:17. Mr. Bolton testified that he created 3D models of the assembly and that along with Mr. Gavel, he created the CAD rendering that became Vertigo Figure 1. *See* Tr. (Bolton) at 849:23-850:6, 854:14-855:13; Tr. (Gavel) at 893:4-897:23. On March 4, 2008, Mr. Bolton sent an email to Mr. Dunn attaching three CAD renderings, including Vertigo Figure 1. *See* JX-0062C; JX-0063C; JX-0064C; JX-0065C. In that email, Mr. Bolton described an idea for having "a split airflow." *See* JX-0062C; Tr. (Bolton) at 853:21-854:13.

On March 26, 2008, MRI filed U.S. Provisional Application No. 61/039,454 ("the '454 provisional") titled "Constricted Convection Cooling System for an Electronic Display," which names Mr. Dunn as the inventor. JX-0079 at 1-2, 33-35; Tr. (Dunn) at 138:15-139:5. The '454

provisional includes Figure 9, which Respondents contend is a "sketch" of Vertigo Figure 1.[125] *See* RIB at 157. The '595 and '322 patents both claim priority to the '454 provisional. *See* JX-0001 at 3, 14; JX-0002 at 4, 14.

2. Analysis

a. Figure 9 of the '595 and '322 Patents

Respondents assert that prior to March 26, 2008, which is the earliest priority date that MRI claims for all asserted claims of the '595 and '322 patents, Mr. Bolton had already conceived of the "split airflow" cooling system with a "chimney" of ambient air depicted in Figure 9 of the '454 provisional (and ultimately, the '595 and '322 patents). RIB at 167. Respondents contend that Mr. Bolton described this idea to Mr. Dunn in the March 4, 2008 email before MRI filed the '454 provisional which named Mr. Dunn as the sole inventor. *Id.* Respondents argue that Mr. Bolton conceived of the invention alone and that his conception is corroborated by "significant documentary evidence, as well as testimony of his colleague, Mr. Gavel." *Id.* Respondents therefore assert that the '595 and '322 patents are invalid for failing to name Mr. Bolton as a joint inventor.

Respondents contend that Mr. Bolton and Mr. Gavel collaborated on the creation of Vertigo Figure 1, which Respondents allege is substantively identical to Figure 9 of the '595 and '322 patents. *Id.* (citing JX-0039C; JX-0040C; JX-0062C-JX-0065C). Respondents assert that Vertigo Figure 1 and Figure 9 of the '595 and '322 patents show (1) a system for cooling an electronic display having a front display surface and a posterior surface, (2) a constricted convection plate with a pair of sidewalls defining a constricted convection channel, (3) a gaseous

[125] MRI appears to acknowledge that Vertigo Figure 1 resembles Figure 9 of the '595 and '322 patents. *See* CIB at 184, 190; *see also* CRB at 108.

closed loop travelling across the front of the display surface and behind the constricted convection plate, (4) a means for propelling gas around the closed loop, (5) a means for cooling the gas in the closed loop, and (6) a means for forcing air through the constricted convection channel. *Id*. at 167-68 (citing Tr. (Smith-Gillespie) at 1036:15-1038:10; JX-0001 at 7:64-8:15; JX-0002 at 7:64-8:15; JX-0039C; JX-0040C; JX-0062C-JX-0065C). Respondents argue that "Vertigo Figure 1 and the related information and know-how that Mr. Bolton conveyed to Mr. Dunn constitute more than an explanation of well-known concepts and/or the then-existing state of the art" and that "such information was a concept that Mr. Bolton alone conceived of and that was a definite and permanent idea which was thereafter applied in operative outdoor displays." *Id*. at 168.

In addition, Respondents contend that there is "substantial corroborating evidence" for Mr. Bolton's contribution to the invention. *Id*. For example, Respondents submit that the evidence shows that Mr. Bolton, with Mr. Gavel's assistance, conceived of the invention shown in Vertigo Figure 1 no later than February 2008. *Id*. Respondents claim that during that timeframe, Mr. Bolton created the initial assembly model and that Mr. Gavel, in collaboration with Mr. Bolton, refined the assembly model, and completed Vertigo Figure 1 no later than February 25, 2008. *Id*. at 168-69. Respondents assert that Mr. Bolton then shared Vertigo Figure 1 with Mr. Dunn along with a description of the invention in the March 4, 2008 email. *Id*. at 169.

Respondents argue that "Mr. Dunn has provided no evidence to corroborate that testimony" that he conceived of his invention in the '454 provisional no later than November 27, 2007. *Id*. at 169. Respondents contend that neither the November 27, 2007 email nor the "new file from bill" CAD file disclose all of the elements of the invention. *Id*.; RRB at 76. For

example, Respondents assert that the phrase "constricted convection" does not appear in the November 27, 2007 email. RRB at 76 (citing RIB at 157-58; Tr. at 147:15-23). In addition, Respondents argue that Mr. Dunn testified that the invention described in the November 27, 2007 email has only two airflow paths while the '595 and '322 patents describe the embodiment in Figure 9 as having three cooling pathways. *Id*. at 77 (citing Tr. 66:15-17, 85:17-22, 141:4-8 (Dunn); JX-0001 at 7:64-8:4). Respondents also argue that Mr. Dunn's testimony about what the "new file from bill" CAD file discloses is not corroborated by any expert testimony and Mr. Dunn's testimony alone is not sufficient to prove conception. *Id*. at 78.

In opposition, MRI argues that Mr. Dunn conceived of the inventions disclosed in the '595 and '322 patents by November 2007. CIB at 180, 185; CRB at 97. MRI submits that Mr. Dunn told Mr. Williams about his idea prior to the December 2007 meeting between MRI and Vertigo. CIB at 180 (citing Tr. (Williams) at 172:3-24). MRI asserts that the November 27, 2007 email that Mr. Dunn sent to his prosecution counsel is an independent source of evidence that supports the credibility of Mr. Dunn's story. *See id*. at 180-81 (citing JX-0315C at 2; Tr. (Dunn) at 63:10-64:3). In addition, MRI argues that "Respondents offered almost no response to this email" other than asking Mr. Dunn to confirm that certain words from some of the patents were not specifically included in that email. *Id*. at 181. MRI also contends that the "new file from bill" CAD file dated November 29, 2007 corroborates Mr. Dunn's inventorship. *Id*. (citing CX-0097C; CDX-002C at 3; CDX-0003C; Tr. (Dunn) at 68:2-72:21). MRI asserts that Mr. Dunn testified that the "new file from bill" CAD file reflected the ideas that he shared with prosecution counsel in his November 27, 2007 email. *See id*. at 180 (citing Tr. (Dunn) at 67:2-10, 70:5-10, 70:20-23, 72:4-21). MRI submits that both Mr. Bolton and Mr. Gavel admitted to not having any contact with Mr. Dunn or MRI before December 2007, and thus, could have not

contributed to the concepts disclosed in the November 27, 2007 email or "new file from bill" CAD file. *Id*. at 183 (citing Tr. (Bolton) at 814:2-815:14, 870:5-9, 871:1-9). In addition, MRI explains how (i) the November 27, 2007 email, (ii) the November 2007 "new file from bill" CAD file, and (iii) [redacted] disclose the invention in the '595 and '322 patents. *See* CRB at 99-101.

"There is a presumption that the inventors named on an issued patent are correct, so misjoinder of inventors must be proven by clear and convincing evidence." *BJ Servs. Co. v. Halliburton Energy Servs., Inc.*, 338 F.3d 1368, 1373 (Fed. Cir. 2003) ("The burden of showing misjoinder or nonjoinder of inventors is a heavy one.") (citations omitted). A party must prove incorrect inventorship by clear and convincing evidence and "must provide evidence to corroborate the alleged joint inventor's conception." *Eli Lilly & Co. v. Aradigm Corp.*, 376 F.3d 1352, 1358 (Fed. Cir. 2004); *see also Ethicon, Inc. v. U. S. Surgical Corp.*, 135 F.3d 1456, 1461 (Fed. Cir. 1998) (finding that "an alleged co-inventor must supply evidence to corroborate his testimony" of conception). In addition, "a party is a joint inventor only if he contributes to the conception of the claimed invention." *Eli Lilly*, 376 F.3d at 1359. "Whether the co-inventor's testimony has been sufficiently corroborated is evaluated under a 'rule of reason analysis,' which requires that an 'evaluation of *all* pertinent evidence must be made so that a sound determination of the credibility of the inventor's story may be reached.'" *Gemstar-TV Guide Int'l, Inc. v. Int'l Trade Comm'n*, 383 F.3d 1352, 1382 (Fed. Cir. 2004) (citations omitted). Moreover, "case law does not require that evidence have a source independent of the inventors on every aspect of conception and reduction to practice." *E.I. du Pont De Nemours & Co. v. Unifrax I LLC*, 921 F.3d 1060, 1077 (citations omitted). Rather, "the law requires only that the corroborative

evidence, including circumstantial evidence, support the credibility of the inventors' story." *Id.* (citations omitted).

Here, the undersigned finds that Respondents have failed to meet their burden to show that Mr. Bolton is a co-inventor on either the '595 patent or the '322 patent.[126] While a large portion of Respondents' argument relies on Mr. Bolton's March 4, 2008 email to Mr. Dunn attaching Vertigo Figure 1, Respondents fail to persuasively address MRI's evidence that Mr. Dunn conceived of the claimed inventions by no later than November 2007, prior to when MRI and Vertigo were introduced to each other. *See* CIB at 180, 185; Tr. (Bolton) at 814:2-815:14, 870:5-9, 871:1-9. Specifically, MRI claims that Mr. Dunn formed a "definite and permanent idea of the complete and operative invention" by November 2007 and provides the following as evidence of conception: (i) the testimony of Mr. Dunn, (ii) the testimony of Mr. Williams, (iii) the November 27, 2007 email from Mr. Dunn to prosecution counsel (JX-0315C); (iv) the "new

[126] Both Respondents and MRI have questioned the credibility of certain witnesses in this investigation with respect to the issue of inventorship. On one hand, MRI asserts that Mr. Bolton works for an MRI competitor and that Samsung's counsel is paying Mr. Bolton and reimbursing his travel costs. *See* CIB at 186 n.8 (citing Tr. (Bolton) at 866:1-7, 865:12-22). On the other hand, Respondents contend that Mr. Dunn has a significant financial interest in this litigation because he is the founder and president of MRI, owns about 90% of the company, and is a named inventor on the Asserted Patents. *See* RRB at 75 n.31. In assessing the credibility of these witnesses, the undersigned finds that neither party persuasively demonstrates that the testimony of either Mr. Bolton or Mr. Dunn should be disregarded..

file from bill" CAD file dated November 29, 2007 (CDX-0003C); and (v) [redacted] [redacted].[127, 128]

Specifically, Mr. Dunn testified that in September 2007 during a business trip to Korea, he called his prosecution counsel and stated, "I've got this hair-brained idea I'm calling the air-to-air intercooler." *See* Tr. (Dunn) at 63:10-64:11. Mr. Williams' testimony corroborates Mr. Dunn's account as Mr. Williams testified that he recalled Mr. Dunn telling him that he had a "great idea" to "use an air-to-air cooling system."[129] Tr. (Williams) at 172:3-16. Mr. Dunn further testified that his November 27, 2007 email to prosecution counsel related to that same idea. *See* Tr. (Dunn) at 64:12-65:5. Supporting this testimony, the email from Mr. Dunn to his prosecution counsel (shown in pertinent part below) describes "another cooling scheme" he wants to patent that Mr. Dunn refers to as "the 'air-to-air' intercooler":

---

[127] Respondents argue that "Mr. Dunn has provided no evidence to corroborate [his] testimony" and that "MRI, however, presented only Mr. Dunn's uncorroborated and self-serving testimony regarding conception . . . ." *See* RIB at 169; RRB at 75. That, however, is not an accurate reflection of the record. Indeed, MRI provides corroborating evidence as described above, which Respondents acknowledge. *See, e.g.*, RIB at 158 (referring to the November 27, 2007 email as a "document MRI produced to allegedly corroborate Mr. Dunn's conception story"), 169 ("MRI relies heavily upon a November 27, 2007 email that Mr. Dunn sent to his patent counsel and a CAD file called 'new file from Bill.'").

[128] In addition, Respondents emphasize that Figure 9 of the '454 provisional application (as well as the '595 and '322 patents) is "a hand tracing of Vertigo Figure 1." *See* RIB at 158-59 (citing JX-0065C; JX-0079 at 33). However, even if Figure 9 was a "hand tracing" of Vertigo Figure 1 created by Mr. Bolton (and there is no clear and convincing evidence demonstrating this given that neither party has cited any evidence of who drew Figure 9, *see, e.g.* Tr. (Dunn) at 86:13-18; Tr. (Bolton) at 857:14-858:8), this fact, in view of the record as a whole, does not make Mr. Bolton a joint inventor. *Cf. StoneEagle Servs., Inc. v. Gillman*, 746 F.3d 1059, 1063 (Fed. Cir. 2014) (finding that allegations that a party authored the patent application did not allege a sufficient controversy concerning inventorship and stating that "assistance in reducing an invention to practice generally does not contribute to inventorship"). In addition, the fact that Vertigo initially included this figure in a patent provisional application but then it was removed before issuance weighs against Respondents' position. *See* Tr. (Bolton) at 887:3-878:9, 881:11-24; CIB at 184-85; CX-2515; CX-241.00235.

[129] While Mr. Williams did not recall the exact date of that discussion, his testimony indicates that it occurred before the December 17, 2007 meeting with Vertigo. *See* Tr. (Williams) at 172:17-24.

From: Bill Dunn [mailto:bdunn@mri-inc.net]
Sent: Tuesday, November 27, 2007 9:50 AM
To: 'Mark Engle'
Cc: 'Jeff Standley'; 'Emily Shultz'
Subject: RE: Fluid Cooled Display Application - Draft 2

Mark,

Dan will be getting back to you on this shortly. In the mean time, we have come up with another cooling scheme that I want to patent as well. This one I call the "air-to-air" intercooler. This is another one of my hair-brained ideas that came to me will asleep in Korea a few weeks back. The idea is to have a closed loop air circulation over the face of the display, and then cool this closed loop with out side air. The reason for the closed loop air stream is to have "clean air" over the display, and then use cooler, but potentially "dirty" air from outside to cool the "clean air". This scheme still utilizes the "air curtain" to aid in the cooling as well. Please see the attached e-drawing, and feel free to call with any questions. We are moving out to build a prototype of this configuration now. The reason for proceeding with this scheme versus the liquid cooled scheme is as follows:

1. Less expensive to fabricate
2. Eliminates the use of potentially hazardous fluids
3. Less on going maintenance (i.e., no fluid filters, no concern for corrosion of coolant lines, radiators, tanks, etc.). No coolant to periodically replace. No concerns with fluid leaks or fluid freezing under cold conditions
4. Provides the ability to clean the front of the display if contaminants should enter the system (very, very difficult with the liquid cooled scheme)

Thanks,

Bill

JX-0315C at 2; Tr. (Dunn) at 63:10-66:14. That email references that the idea "came to me will [*sic*] asleep in Korea a few weeks back" further substantiating Mr. Dunn's testimony regarding the timing and content of his September 2007 phone call with prosecution counsel describing the idea. *See* JX-0315C at 2. The email further explains that "[t]he idea is to have a closed loop air circulation over the face of the display, and then cool this closed loop with out side [*sic*] air." *Id.*

In addition, the "new file from bill" CAD file dated November 29, 2007 provides further documentary corroboration of Mr. Dunn's conception. Mr. Dunn testified that the CAD file was created at his direction and reflected the ideas that were in his November 27, 2007 email. *See* Tr. (Dunn) at 66:20-68:14. In addition, Mr. Dunn described an annotated image from the CAD file and how that image reflected his claimed invention.

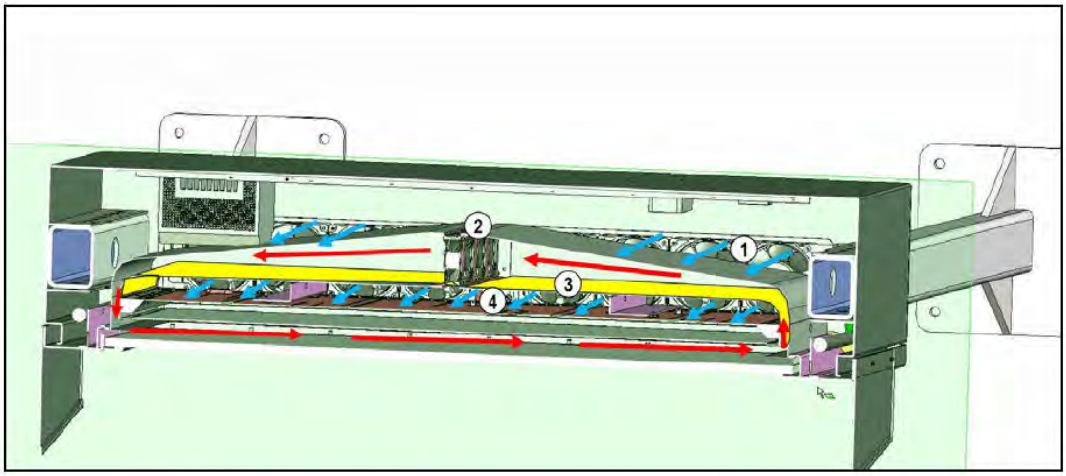

See CDX-0002C (citing CX-0097C); Tr. (Dunn) at 69:18-70:23 (describing this as a horizontal cross-section as viewed from the top of the unit), 72:4-21. Mr. Dunn testified that item number 1 in the image above designated the open loop fans and item number 2 designated the closed loop fans that "are propelling" air "in a continuous circular path." Tr. (Dunn) at 69:22-70:10. He further testified that item number 4 is a "squeezed or reduced or restricted channel intended to accelerate the flow of air." *Id.* at 72:4-13.

While Respondents argue that Mr. Dunn's testimony regarding what the "new file from bill" CAD file discloses is not corroborated by any expert testimony, *see* RRB at 78, it is Respondents' burden to prove incorrect inventorship by clear and convincing evidence. *See Eli Lilly*, 376 F.3d at 1358; *see also BJ Servs. Co.* 338 F.3d at 1373 ("The burden of showing misjoinder or nonjoinder of inventors is a heavy one."). Respondents have not provided evidence indicating that item number 4 is not a constricted convection channel or that item number 3 (which appears in the "new file from bill" to border the channel identified by Mr.

Dunn as item number 4) is not a "constricted convection plate."[130] Moreover, there is no requirement that evidence corroborating conception need to use terms from the patent claims, nor have Respondents cited to any such authority. Rather, as previously discussed, "the law requires only that the corroborative evidence, including circumstantial evidence, support the credibility of the inventors' story." *E.I. du Pont*, 921 F.3d at 1077; *see also NFC Tech., LLC v. Matal*, 871 F.3d 1367, 1371-72 (Fed. Cir. 2017) ("There is no particular formula that an inventor must follow in providing corroboration of his testimony of conception. Instead, corroboration is determined by a "rule of reason" analysis, in which an evaluation of all pertinent evidence must be made so that a sound determination of the credibility of the inventor's story may be reached.") (quotations omitted).

The undersigned finds that the evidence of record fails to show, clearly and convincingly, that Mr. Dunn did not conceive of the asserted inventions depicted in Figure 9 of the '595 and '322 patents. In addition, the evidence demonstrates that (i) the November 27, 2007 email, (ii) the November 2007 "new file from bill" CAD file, and (iii) [redacted] [131] disclose claim 9 of the '595 patent. *See* CRB at 99-101; JX-0315C at 2; CX-0097C;

---

[130] The term "constricted convection channel" was construed to mean "a constricted channel through which air may flow to remove heat from the [posterior display surface/posterior surface]." *Supra* at Section IV.A.4. The term "constricted convection plate" was construed to mean "a plate configured to form part of a constricted convection channel." *Id.*

[131] Separate from the Outdoor Promotions project with Vertigo, on or around January 14, 2008, [redacted] *See* CX-1117C; CX-1118C. Given the history of MRI's working relationship with [redacted] is further corroborating evidence of conception. Moreover, Respondents claim that Mr. Bolton conceived of the invention shown in Vertigo Figure 1 no later than February 2008. *See, e.g.*, RIB at 168. In the [redacted]

CDX-0002C at 3; CDX-0003; Tr. (Dunn) at 67:25-68:14, 69:18-70:23, 72:4-13; CX-1118C at 1. Thus, taken as a whole, the evidence sufficiently corroborates Mr. Dunn's testimony regarding his conception of the claimed inventions. Respondents have not proven by clear and convincing evidence that Mr. Dunn did not conceive of the inventions depicted in Figure 9 of the '595 and '322 Patents.

b. "Brackets" of claims 1 and 5 of the '322 Patent

Respondents also argue that "to the extent there is anything inventive about the brackets claimed in claims 1 and 5 of the '322 patent, feature, it is Mr. Gavel who conceived of that invention." RIB at 169; RRB at 75, 82. MRI, however, asserts that there is nothing novel or non-obvious about mounting brackets. CIB at 187; CRB at 101 ("[T]here is nothing inventive about stand-alone brackets."). Therefore, there appears to be no dispute between the parties that the "at least one bracket" recited in claims 1 and 5 of the '322 patent is not "inventive." *See* RIB at 169; RRB at 75, 82; CIB at 187; CRB at 101; *see also* Tr. (Gavel) at 916:17-23 ("Q. But the creation of that custom bracket that you -- that you created reflects nothing more than common design work, right? A. I would agree with that."); RIB at 2 (referencing "obvious limitations" such as a "bracket").

Thus, regardless of whether Mr. Gavel conceived of the brackets, that would not make him a joint inventor of claim 1 or 5 of the '322 patent. *See Trovan, Ltd. v. Sokymat SA, Irori*, 299 F.3d 1292, 1302 (Fed. Cir. 2002) ("[T]he basic exercise of ordinary skill in the art, without an inventive act, does not make one a joint inventor."); *see also Natron Corp. v. Schukra U.S.A.*

[redacted] *See* CX-1118C at 1; *see also* Tr. (Dunn) at 72:24-75:23 ('[redacted]

Inc., 558 F.3d 1352, 1357 (Fed. Cir. 2009) (finding a party not entitled to co-inventorship where the contribution of an extender was "insignificant when measured against the full dimension of the invention" and that including it as part of the claimed invention was "merely the basic exercise of ordinary skill in the art").

***

For these reasons, Respondents have failed to prove by clear and convincing evidence that the '595 and '322 patents are invalid for improper inventorship.

IX. UNENFORCEABILITY

A. Inequitable Conduct

Respondents assert that each of the Asserted Patents is invalid as a result of inequitable conduct committed by the patent applicant, Mr. Dunn. Respondents argue that Mr. Dunn's failure to name either Mr. Bolton or Mr. Gavel as joint inventors, coupled with his pattern and practice of failing to disclose information material to patentability to the PTO in order to secure patents, renders the Asserted Patents unenforceable due to inequitable conduct. RIB at 170; RRB at 83.

1. The '595 and '322 Patents

Respondents assert that Mr. Dunn signed oaths attesting that he was the lone original inventor when he submitted the applications that led to the '595 and '322 patents. RIB at 173. Respondents argue that because failure to name a joint inventor renders a patent invalid, filing a false oath is per se material to the patentability of those patents. *Id.*; RRB at 83.

MRI contends that for the same reasons as inventorship, Mr. Dunn is the sole inventor of the '595 and '322 patents and therefore, his declarations that he was the original inventor were correct and cannot be but-for material. CRB at 106-07; CIB at 190 ("Respondents' argument

with respect to Vertigo Figure 1 is based entirely on improper inventorship; they do not separately allege that Vertigo Figure 1 is but-for material outside of the inventorship inquiry.").

The undersigned determined above that Respondents have failed to meet their burden to show that the '595 and '322 patents are invalid for failing to name the proper inventors. *See supra* at Section VIII.H.2. Therefore, there is no basis to conclude that Mr. Dunn signed false oaths with respect to the '595 and '322 patents. *See generally Therasense*, 649 F.3d at 1291.

In addition, Respondents allege that "Mr. Dunn engaged in an ongoing pattern of deceptive conduct during prosecution of the Asserted Patents that supports a finding that Mr. Dunn intended to deceive the PTO." RIB at 174. Specifically, Respondents assert that during prosecution, MRI failed to disclose (i) that it included third party confidential information belonging to Vertigo in several of its patent applications, (ii) that it included third party confidential information belonging to Samsung in several of its patent applications, and (iii) MRI's own commercial products as material prior art. *Id.* Respondents, however, rely on that conduct to argue that Mr. Dunn displayed "a pattern of behavior that supports an inference that Mr. Dunn had an intent to deceive." *See id.* Respondents do not specifically argue that any of that allegedly withheld information (*i.e.*, the third-party Vertigo or Samsung confidential information or MRI commercial products) was material to the patentability of the '595 or '322

patents.[132, 133] *See* RIB at 174-77; RRB at 83-86. Rather, Respondents only allege that Mr. Dunn's allegedly false oath is per se material. *See* RIB at 173-74; RRB at 83. Thus, Respondents have not proven that MRI or Mr. Dunn omitted information material to the patentability of the '595 or '322 patents.

Accordingly, because Respondents have not proven materiality, they cannot prove by clear and convincing evidence that the '595 and '322 patents are unenforceable due to inequitable conduct. *See Network Signatures, Inc. v. State Farm Mut. Auto. Ins. Co.*, 731 F.3d 1239, 1242 ("Materiality and intent must be separately established.") (citations omitted).

2. The '287, '740, and '142 Patents

Respondents argue that "[t]here is an immediate and necessary relation between Mr. Dunn's conduct set forth above as to the '595 and '322 patents, on the one hand, and the '287 patent, on the other." RIB at 178. Similarly, Respondents argue that "[t]here is an immediate and necessary relation between Mr. Dunn's conduct set forth above as to the '595 and '322 patents, on the one hand, and the '740 and '142 patents, on the other." *Id.* Respondents therefore contend that the asserted claims in the '287, '740, and '142 patents are unenforceable under the doctrine of infectious unenforceability. *Id.*

---

[132] While in one sentence Respondents state that "MRI also failed to disclose material prior art, specifically MRI's own commercial products, to the PTO during prosecution," Respondents do not provide any explanation or evidentiary support for that conclusory statement. *See* RIB at 174-77. Nor do they refer to "material prior art" again. *See id.* Indeed, Respondents summarize their argument regarding inequitable conduct as follows: "Therefore, because Mr. Dunn's failure to name Mr. Bolton as a joint inventor is material to the patentability of the '595 and '322 patents and because Mr. Dunn engaged in a pattern of conduct indicating an intent to deceive the patent office, the '595 and '322 patents are unenforceable due to inequitable conduct." *Id.* at 177. Accordingly, Respondents do not prove by clear and convincing evidence, the "but-for-materiality" of either the Vertigo or Samsung information or the MRI commercial products. *See Therasense*, 649 F.3d at 1287, 1291.

[133] Moreover, the evidence shows that MRI had used at least certain Vertigo images with Vertigo's knowledge and permission. *See* RX-0697; Tr. (Bolton), 872:11-874:16.

Because the undersigned found above that Respondents did not prove by clear and convincing evidence that the '595 and '322 patents are unenforceable due to inequitable conduct, Respondents' assertions of infectious unenforceability with respect to the '287, '740, and '142 patents likewise fail. *See In re Omeprazole Patent Litigation*, 483 F.3d 1364, 1375 (Fed. Cir. 2007) ("Without a finding of inequitable conduct in the first instance, Andrx cannot possibly prevail with its new contentions of 'infectious unenforceability' against all patents in suit.").

B. Unclean Hands

Respondents assert that MRI's claims are barred in whole or in part by the doctrine of unclean hands. RIB at 179. Respondents contend that MRI and Mr. Dunn intentionally withheld information material to the patentability of the claims of the Asserted Patents from the Patent Office during prosecution. *Id.* at 180. Respondents argue that "Mr. Dunn's conduct as to the '595 and '322 Patents is related to at least one issued claim in the '142, '287, and '740 Patents." *Id.* Respondents contend that Mr. Dunn would not have conceived of, or reduced to practice, the alleged inventions set forth in the '595, '322, '142, '287, and '740 patents absent the assistance of Vertigo. *Id.* In addition, Respondents argue that Mr. Dunn's misconduct was "an egregious attempt to defraud the Patent Office, and it would transgress the equitable standards of conduct for MRI to enforce patents obtained by passing off inventions developed by Vertigo as their own." *Id.* Respondents also assert that MRI and Mr. Dunn misappropriated a Samsung entity's CAD drawing for use in its patent applications and intentionally withheld from the Patent Office that Samsung Electronics had created Figures 1 and 2 of the '322 and '595 patents. *Id.* Respondents argue that Mr. Dunn's use of the Samsung entity's intellectual property in obtaining the '322 and '595 patents, and now using such patents to sue the Samsung Respondents for alleged patent infringement, "transcends the bounds of decency." *Id.* Moreover, Respondents

submit that it "transcends the bounds of decency that MRI passed off as its own invention ideas and innovations that Vertigo and Samsung each disclosed to MRI pursuant to NDAs." *Id.*

MRI argues that Mr. Dunn disclosed all relevant information to the PTO and is the proper inventor of the Asserted Patents. CIB at 196. MRI asserts that Respondents fail to prove any misconduct that "shock[s] the moral sensibilities of the judge" or is "offensive to the dictates of natural justice." *Id.* In addition, MRI argues that Respondents fail to show that any alleged egregious misconduct has an immediate and necessary relation to the equity that they seek. *Id.* MRI contends that while Respondents complain that Mr. Dunn's and Standley Law Group emails from 2007-2008 were lost due to computer crashes and corrupted back-up tapes, they do not identify a single act of misconduct. *Id.* at 197. MRI therefore argues that they were just technological issues. *Id.*

MRI also argues that Respondents fail to show any inequitable conduct and thus their unclean hands defense based on those allegations fails. CRB at 110. MRI asserts that Respondents fail to demonstrate that Vertigo, Mr. Bolton, or Mr. Gavel invented claim 9 of the '595 patent or claims 1 and 6 of the '322 patent. *Id.* In addition, MRI contends that Respondents cite no evidence supporting their unclean hands defense regarding the '142, '287, and '740 patents. *Id.* at 110-11. Lastly, MRI argues that there is no evidence that Figures 1 and 2 of the '585 and '322 patents are covered by any Samsung intellectual property. *Id.* at 111. MRI claims that those images were publicly available and used in the patents to describe a "typical" display, *i.e.*, prior art. *Id.* (citing JX-0002 at 4:39-41; JX-0066C; Tr. (Dunn) at 164:11-165:13). MRI contends that there is no dispute that displays were well-known at the time of invention, including Samsun displays. *Id.* (citing JX-0001 at 1:52-53). Moreover, MRI submits that it is not improper to include another's figures in a patent. *Id.* (citing Tr. (Hirshfeld) at 1318:2-10;

1322:22-1223:8). MRI therefore argues that identifying Samsung prior art in a patent does not "transcend the bounds of decency." *Id.*

As an initial matter, because the undersigned found above that Respondents did not prove that the '595 and '322 patents are unenforceable due to inequitable conduct, that cannot form the basis of their defense of unclean hands. In addition, Respondents' arguments regarding the Samsung diagram are unpersuasive. There does not appear to be any dispute that Figures 1 and 2 of the '595 and '322 patents depict a Samsung LCD product.[134] *See* Tr. (Dunn) at 125:4-23; RX-0001C at 5-6 ("Complainant admits that Figure 2 of the '595 Patent and '322 Patents is the rear view of the back of a Samsung LCD module."). However, there is no clear and convincing evidence demonstrating that the Samsung diagram related to Figure 2 in the '595 and '322 patents is confidential Samsung information that was improperly incorporated into those patents. *See* JX-0001 at Fig. 2; JX-0002 at Fig. 2; JX-0066C[135] at 22; Tr. (Dunn) at 164:14-165:13. Indeed, the evidence shows that product information related to the Samsung LTI700HD01 was produced and published without confidentiality markings as of August 2, 2007, including the diagram that Respondents allege is the basis for Figure 2 of the '595 and '322 patents.[136] *See* JX-0066C at 1, 22; Tr. (Dunn) at 164:14-165:13. Moreover, Respondents do not argue that the

[134] The '595 and '322 patents share a common specification. *See* RIB at 8; CIB at 5; JX-0001; JX-0002.

[135] Exhibit JX-0066C is a product specification for the Samsung model LTI700HD01-001, which is the same model that is the subject of exhibit JX-0110C cited by Respondents. *See* JX-0066C; JX-0110C; RIB at 164.

[136] Moreover, the nondisclosure agreement that Respondents rely on is between Samsung and American Panel Corporation, not MRI. *See* JX-0306. In addition, regardless of whether MRI was a party to that agreement, the NDA provides that "[w]ritten confidential information shall be clearly marked as confidential or designated as confidential via transmittal cover memo at the time of initial disclosure." JX-0306 at 1. However, there is no evidence that the document that includes the diagram of the Samsung LTI700HD01 is clearly marked as confidential. *See* JX-0066C.

Samsung LTI700HD01-001 was material to patentability of the '595 or '322 patents. *See, e.g.*, RIB at 175.

Accordingly, the evidence does not support a finding of unclean hands.

X. CONCLUSIONS OF LAW

Based on the foregoing, and the record, it is the undersigned's final initial determination that there has been no violation of section 337 of the Tariff Act of 1930, as amended, 19 U.S.C. § 1337, in the importation into the United States, the sale for importation, and/or the sale within the United States after importation of certain outdoor and semi-outdoor electronic displays, products containing same, and components thereof.

This determination is based on the following conclusions of law:

1. The Accused Products have been imported into the United States, sold for importation, and/or sold within the United States after importation.

2. The Commission has *in rem* jurisdiction over the Accused Products.

3. The Accused Samsung Mid-Sized Products infringe claim 1 of the '595 patent.

4. The Accused Samsung Mid-Sized Products do not infringe claims 9, 12, or 13 of the '322 patent or claim 12 of the '287 patent. In addition, the Samsung Mid-Sized Products do not infringe claims 4, 7, and 8 of the '595 patent; claims 4, 5, and 8 of the '322 patent; claims 1 and 5 of the '740 patent; or claims 6 and 10 of the '142 patent.

5. The Accused Samsung Large-Sized Products infringe claims 4 and 7 of the '595 patent; claims 4 and 5 of the '322 patent; claims 1 and 5 of the '740 patent; and claims 6 and 10 of the '142 patent.

6. The Accused Samsung Large-Sized Products do not infringe claim 8 of the '595 patent or claim 8 of the '322 patent. In addition, the Samsung Large-Sized Products do not infringe claim 1 of the '595 patent; claims 9, 12, and 13 of the '322 patent; or claim 12 of the '287 patent.

7. The Non-Accused OM Products do not infringe claims 1, 4, 7, or 8 of the '595 patent; claims 4, 5, 8, 9, 12, or 13 of the '322 patent; claim 12 of the '287 patent; claims 1 and 5 of the '740 patent; or claims 6 and 10 of the '142 patent.

SEC et al. v. MRI
SEC Exhibit 1048.323
IPR2023-00220

8. The technical prong of the domestic industry requirement has been satisfied for claims 1, 4, 7, and 9 of the '595 patent; claims 3, 4, 5, and 9 of the '322 patent; claim 12 of the '287 patent; claims 1 and 5 of the '740 patent; and claims 6 and 10 of the '142 patent.

9. The following claims are invalid: claims 1, 4, 7, and 8 of the '595 patent; claims 3, 4, 5, 8, 9, 12, and 13 of the '322 patent; claims 1 and 5 of the '740 patent; and claims 6 and 10 of the '142 patent.

10. Claim 12 of the '287 patent has not been shown to be invalid.

11. The '595, '322, '287, '740, and '142 patents have not been shown to be unenforceable.

12. The economic prong of the domestic industry requirement has been satisfied with respect to the '595, '322, '287, '740, and '142 patents.

The undersigned hereby certifies the record in this investigation to the Commission with the undersigned's final initial determination. Pursuant to Commission Rule 210.38, the record further comprises the complaint and exhibits thereto, and the exhibits attached to the parties' summary determination motions and the responses thereto. 19 C.F.R. § 210.38(a).

Pursuant to Commission Rule 210.42(h)(2), this initial determination shall become the determination of the Commission 60 days after the service thereof, unless a party files a petition for review pursuant to Commission Rule 210.43(a), the Commission orders its own review pursuant to Commission Rule 210.44. 19 C.F.R. § 210.42(h)(2).

This initial determination is being issued with a confidential designation pursuant to Commission Rule 210.5 and the protective order in this investigation. Within 10 days of the date of this document, the parties shall submit a joint statement as to whether or not they seek to have any portion of this document deleted from the public version. If the parties do seek to have portions of this document deleted from the public version, they must submit a single proposed public version of this final initial determination with any proposed redactions consistent with the

manner specified by Ground Rule 1.9.[137] The submission shall be made by email to Bhattacharyya337@usitc.gov and need not be filed with the Commission Secretary.

SO ORDERED.

Monica Bhattacharyya
Administrative Law Judge

[137] Redactions should be limited to avoid obscuring the reasoning underlying the decision. Parties who submit excessive redactions may be required to provide an additional written statement, supported by declarations from individuals with personal knowledge, explaining why each proposed redaction meets the definition for confidential business information in 19 C.F.R. § 201.6(a).