PUBLIC VERSION

Trials@uspto.gov
571-272-7822

Paper 62
Date: June 18, 2024

UNITED STATES PATENT AND TRADEMARK OFFICE

BEFORE THE PATENT TRIAL AND APPEAL BOARD

SAMSUNG ELECTRONICS CO., LTD. and
SAMSUNG ELECTRONICS AMERICA, INC.,
Petitioner,

v.

MANUFACTURING RESOURCES INTERNATIONAL, INC.,
Patent Owner.

IPR2023-00220
Patent 9,173,322 B2

Before JAMESON LEE, JO-ANNE M. KOKOSKI, and
JOHN A. HUDALLA, *Administrative Patent Judges.*

KOKOSKI, *Administrative Patent Judge*.

JUDGMENT
Final Written Decision
Determining All Challenged Claims Unpatentable
35 U.S.C. § 318(a)
Dismissing Petitioner's Motion to Strike
37 C.F.R. § 42.5(a)

I. INTRODUCTION

We have jurisdiction to conduct this *inter partes* review under 35 U.S.C. § 6, and issue this Final Written Decision pursuant to 35 U.S.C. § 318(a). For the reasons that follow, we determine that Samsung Electronics Co., Ltd. and Samsung Electronics America, Inc. (collectively, "Petitioner" or "Samsung") show by a preponderance of the evidence that claims 1–5, 7–13, and 16 (the "challenged claims") of U.S. Patent No. 9,173,322 B2 ("the '322 patent," Ex. 1001) are unpatentable.

A. Procedural Background

Petitioner filed a Corrected Petition to institute an *inter partes* review of claims 1–5, 7–13, and 16 of the '322 patent. Paper 9 ("Pet."). Manufacturing Resources International, Inc. ("Patent Owner" or "MRI") filed a Preliminary Response. Paper 7. Pursuant to 35 U.S.C. § 314(a), we instituted an *inter partes* review of claims 1–5, 7–13, and 16 on the grounds advanced in the Petition. Paper 11 ("Institution Decision" or "Dec."), 6, 49. After institution of trial, Patent Owner filed a Patent Owner Response ("PO Resp.," Papers 21 (confidential), 38 (redacted)), Petitioner filed a Reply ("Pet. Reply," Papers 33 (confidential), 40 (redacted)), and Patent Owner filed a Sur-reply ("PO Sur-reply," Paper 41). Petitioner filed a Motion to Strike Patent Owner's Exhibits 2055 and 2056 (Paper 47), and Patent Owner filed an Opposition (Paper 49).

We held an oral hearing on March 21, 2024, and a transcript is included in the record. Paper 56.

B. Real Parties in Interest

Petitioner identifies Samsung Electronics Co., Ltd., Samsung Electronics America, Inc., Samsung SDS Co., Ltd., Samsung SDA America,

Inc., Coates Signco Pty Limited, Coates US Inc., and Industrial Enclosure Corporation d/b/a Palmer Digital Group as the real parties-in-interest. Pet. 2. Patent Owner identifies itself as the real party-in-interest. Paper 5, 2 (Mandatory Notice).

C. Related Matters

The parties indicate that the '322 patent is at issue in *Manufacturing Resources, Inc. v. Samsung Electronics Co., Ltd.*, No. 2:22-cv-00320 (E.D. Tex.) and *In re Certain Outdoor and Semi-Outdoor Electronic Displays, Products Containing Same, and Components Thereof*, Investigation No. 337-TA-1331 (ITC). Pet. 2; Paper 5, 2. Patent Owner additionally identifies the following related *inter partes* review proceedings: IPR2023-00199, IPR2023-00221, IPR2023-00254, and IPR2023-00255. Paper 5, 2.

Patent Owner additionally identifies several other *inter partes* reviews that "may be deemed related" to this proceeding. Paper 5, 2.

D. The '322 Patent

The '322 patent relates "to cooling systems and in particular to cooling systems for electronic displays." Ex. 1001, 1:46–47. The Specification explains that "cooling devices for electronic displays in the past have generally used convective heat dissipation systems that function to cool an entire interior of the display by one or more fans and fins," and such systems "functioned satisfactorily with ten or twelve inch screens." *Id*. at 2:8–11, 2:20–21. The Specification further explains that "[n]ow, many displays are in need of screens having sizes greater than or equal to twenty-four inches" and "some outdoor applications call for seventy inch screens and above." *Id*. at 2:21–25. "With increased heat production with the larger

screens and radiative heat transfer from the sun through the display window," the cooling systems of the past "are no longer adequate." *Id*. at 2:25–29.

The '322 patent addresses this issue by providing "a constricted convection cooling system and a method of cooling an electronic display." Ex. 1001, 2:43–45. In particular, the Specification teaches that the cooling system includes an external housing with an air entrance end and an exhaust end, and a constricted convection plate preferably mounted to the posterior display surface. *Id*. at 2:45–51. "The posterior display surface may be the posterior surface of the backlight assembly or the posterior surface of any other thin panel display (OLED, plasma, etc.)." *Id*. at 2:51–54.

The Specification further teaches that "[t]he constricted convection plate further defines a constricted convection cooling channel immediately behind the posterior display surface" that "may be adapted to receive air entering the entrance aperture and adapted to expel air through the exit aperture." Ex. 1001, 2:54–59. In addition, "[o]ne or more fans may be used to draw the cooling air through the constricted convection channel" or "to force air through the constricted convection cooling channel." *Id*. at 2:65–3:2. According to the Specification, "[t]his helps cool the display assembly in a uniform manner" and "is particularly beneficial with an LED backlight, as individual LEDs may fail prematurely if exposed to high levels of heat for an extended period of time." *Id*. at 3:5–8.

E. Challenged Claims

Petitioner challenges claims 1–5, 7–13, and 16 of the '322 patent. Pet. 1, 4. Claims 1, 4, and 9 are independent, illustrative of the claimed subject matter, and reproduced below.

> 1. A system for cooling an electronic display having a posterior display surface and contained within a housing, the system comprising:
>
> a constricted convection plate placed posterior to the posterior display surface covering the majority of the posterior display surface;
>
> at least one bracket which connects the posterior display surface with the constricted convection plate; and
>
> a fan placed to draw ambient air between the constricted convection plate and the rear posterior.

Ex. 1001, 9:60–10:2.

> 4. A liquid crystal display (LCD) comprising:
>
> a liquid crystal stack;
>
> a backlight assembly behind the liquid crystal stack and comprising:
>
> a printed circuit board (PCB) having a front and back sides;
>
> a plurality of LEDs mounted on the front side of the PCB;
>
> a posterior surface on the rear side of the PCB;
>
> a constricted convection plate placed behind and substantially parallel with the posterior surface of the PCB; and
>
> a fan positioned to draw air between the constricted convection plate and the posterior surface.

Id. at 10:9–21.

> 9. A system for cooling an electronic display comprising:
>
> an electronic display comprising a front display surface and a posterior surface where no electronics are mounted to the posterior surface of the electronic display;
>
> a constricted convection plate behind the posterior surface of the display covering a majority of the posterior display surface; and

> a means for forcing air between the constricted convection plate and the posterior surface of the electronic display.

Id. at 10:40–49.

F. Evidence

Petitioner relies on the evidence listed below (Pet. 4–5, 13–27):

Name	Reference	Date	Exhibit No.
Kim	US 7,800,706 B2	Sept. 21, 2007	1005
Cho	US 2006/0132699 A1	June 22, 2006	1006
Hong	US 2007/0171353 A1	July 26, 2007	1029
Kimura	US 2006/0199514 A1	Sept. 7, 20067	1004
Takahashi	JP H11-683-63	March 9, 1999	1007 1008 (as translated)
Kochiyama	JP P2003-162228A	June 6, 2003	1027 1028 (as translated)
Na	KR 10-2006-0016469	Feb. 22, 2006	1009 1010 (as translated)
Tachikawa	JP P2006-330196A	Dec. 7, 2006	1025 1026 (as translated)

Petitioner also relies on the Declaration of Robert Smith-Gillespie ("Smith-Gillespie Declaration," Ex. 1002). Patent Owner relies on the Declaration of Michael N. Gershowitz (Ex. 2006).

G. Prior Art and Asserted Grounds

Petitioner asserts that claims 1–5, 7–13, and 16 are unpatentable based on the following grounds:

Claim(s) Challenged	35 U.S.C. §	Reference(s)/Basis
4, 7	103[1]	Kim, Hong

[1] The Leahy-Smith America Invents Act ("AIA"), Pub. L. No. 112–29, 125 Stat. 284 (2011), revised 35 U.S.C. §§ 102 and 103 effective March 16, 2013. Petitioner argues, and Patent Owner does not contest, that the pre-AIA statutory provisions apply to this case. *See* Pet. 13, 16, 17, 19, 21, 23, 24, 26. Accordingly, we apply the pre-AIA versions of §§ 102 and 103.

Claim(s) Challenged	35 U.S.C. §	Reference(s)/Basis
5	103	Kim, Hong, Tachikawa
8	103	Kim, Hong, Takahashi
1–3	103	Kim, Tachikawa
4, 8–10, 16	103	Na
7, 12, 13	103	Na, Kim
11	103	Na, Tachikawa
9, 12, 13, 16	103	Kimura
1–3, 11	103	Kimura, Kochiyama
4, 7	103	Kimura, Hong
5	103	Kimura, Hong, Kochiyama
4, 5, 9–11	103	Cho

Pet. 4–5.

II. ANALYSIS

A. Level of Ordinary Skill in the Art

Petitioner contends that a person of ordinary skill in the art ("POSITA") "would have possessed a bachelor's degree in a pertinent discipline, such as mechanical engineering, physics, product design, or a related field" and "2–4 years of experience in working with electronic displays and have an understanding of product design issues and failure modes associated with electronic displays." Pet. 7 (citing Ex. 1002 ¶ 38). In the alternative, Petitioner argues that "a POSITA would have had 5–7 years of experience in the field working with electronic displays and have a similar understanding of product design issues and failure modes associated with electronic displays." *Id*. (citing Ex. 1002 ¶ 38).

Patent Owner argues that a POSITA "would have had a bachelor's degree in a pertinent discipline, such as mechanical or electrical engineering, physics, applied physics, or a related field" with "2–4 years of experience in working with electronic displays." PO Resp. 7 (citing Ex. 2006 ¶ 36).

Alternatively, Patent Owner argues that "a POSITA would have had 4–6 years of experience in the field and would have developed a similar understanding of thermal management associated with electronic displays." *Id*. (citing Ex. 2006 ¶ 36).

In the Institution Decision, we determined that a POSITA would have had a bachelor's degree in a pertinent discipline, such as mechanical engineering, physics, applied physics, product design, or a related field, and would also have had 2–4 years of experience working with electronic displays, including the thermal management, product design issues, and failure modes associated with such displays, or 5–7 years of experience in the field working with electronic displays and would have developed a similar understanding of thermal management, product design issues, and failure modes associated with electronic displays. Dec. 7–8. The parties' positions have not changed from those we considered in the Institution Decision, and neither party argues that the outcome of this case would differ based on our adoption of a particular level of ordinary skill in the art. Thus, we apply the same definition in this Decision. Our determination regarding Petitioner's challenge does not turn on the differences between Petitioner's and Patent Owner's proposed definitions, however, and we note that our conclusion would be the same under either definition.

B. Claim Construction

We construe each claim "in accordance with the ordinary and customary meaning of such claim as understood by one of ordinary skill in the art and the prosecution history pertaining to the patent." 37 C.F.R. § 42.100(b). Under this standard, claim terms are generally given their plain and ordinary meaning as would have been understood by a person of

ordinary skill in the art at the time of the invention and in the context of the entire patent disclosure. *Phillips v. AWH Corp.*, 415 F.3d 1303, 1313 (Fed. Cir. 2005) (en banc). Only those terms in controversy need to be construed, and only to the extent necessary to resolve the controversy. *Realtime Data LLC v. Iancu*, 912 F.3d 1368, 1375 (Fed. Cir. 2019).

For purposes of the Institution Decision, we determined that "means for forcing air between the constricted convection plate and the posterior surface of the electronic display" as recited in claim 9 is a means-plus-function clause with the claimed function of "forcing air between the constricted convection plate and the posterior surface of the electronic display." Dec. 9. We also determined that the disclosed structure corresponding to that function is "one or more fans, or an air conditioning unit." *Id*. at 9–10. The parties do not contest our construction of this term (PO Resp. 8; Pet. Reply 2), and we see no reason to modify the construction in light of the record developed at trial. Thus, we apply the same construction in this Decision.

Based on our review of the complete trial record and the claim construction arguments raised by the parties, we determine that it is not necessary to expressly construe any other claim terms to resolve the parties' dispute. *Realtime Data*, 912 F.3d at 1375. To the extent that the scope of a term requires discussion, however, we provide it in the following analysis of the challenge.

C. Asserted Obviousness over Na

Petitioner contends that claims 4, 8–10, and 16 would have been obvious over the teachings of Na. Pet. 50–65.

1. Overview of Na

Na relates "to a backlight unit capable of improving a cooling effect and a liquid crystal display device including the same." Ex. 1010, 2. "[T]he backlight unit includes a light generator that generates light, and a storage container where the light generator is accommodated and an intake unit through which external air is sucked and an exhaust unit through which internal air is discharged are formed." *Id*. at 3.

Na's Figure 1 is reproduced below.

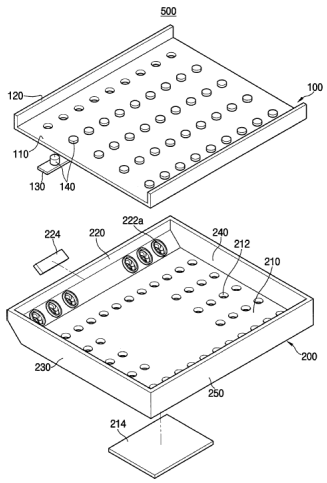

Figure 1 is an exploded perspective view of one embodiment of a backlight unit described in Na. Ex. 1010, 1. Backlight unit 500 includes areal light source device 100 and storage container 200. *Id*. at 4. Areal light source device 100 includes reflective plate 110, sidewall 120, driving substrate 130, and a plurality of LED light sources 140. *Id*. A plurality of coupling holes 112 are formed in reflective plate 110 so that the LED sources 140 can be coupled. *Id*. Sidewall 120 is formed on the edge portion of reflective plate 110 in order to couple areal light source device 100 to storage container 200. *Id*.

Storage container 200 accommodates areal light source device 100 and includes bottom plate 210, first sidewall 220, second sidewall 230, third sidewall 240, and fourth sidewall 250. Ex. 1010, 4. First through fourth sidewalls 220, 230, 240, and 250 "extend from the edge portions of the bottom plate 210, respectively, to form a storage space and an inner space." *Id*. First driving circuit 214 is disposed on bottom plate 210 and drives areal light source device 100, and through-holes 212 are formed in portions of bottom plate 210 except "where the first driving circuit 214 is disposed." *Id*. Na explains that through-holes 214 "function as an intake unit through which external air is sucked." *Id*. A plurality of fans 222a are formed on first sidewall 220, and are operated to flow air from the inner space to the outside to transfer the heat generated by areal light source 100 from the inner space to the outside. *Id*. Na explains that plurality of "fans 222a function as an exhaust unit for discharging internal air." *Id*.

Na's Figure 3 is reproduced below.

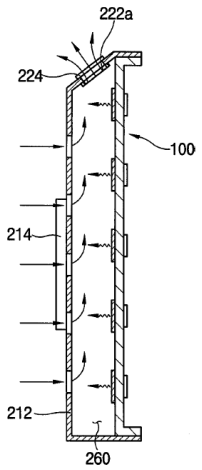

Figure 3 depicts "a side view for explaining a cooling process of the backlight unit of FIG. 1." Ex. 1010, 1. LED array substrate 110 of areal light source device 100 is driven to generate heat, increasing the temperature

of the air in inner space 260 between areal light source device 100 and storage container 200. *Id*. at 5. The heated air is discharged to the outside of backlight unit 500 by a plurality fans 222a. *Id*. Discharging the heated air lowers the pressure in inner space 260, and "low-temperature air cooler than the high-temperature air in the inner space 260 is introduced from the outside of the backlight unit 500 through the through-holes 212." *Id*. Na explains that "the processes of discharging high-temperature internal air and introducing low-temperature external air are continuously repeated, and as a result, the heat generated in the areal light source device 100 is cooled by the flow of air." *Id*.

2. Analysis of Claim 4

Petitioner contends that Na teaches all of the elements of independent claim 4. Pet. 50–58. For example, Petitioner contends that Na teaches "a liquid crystal stack" (liquid crystal display panel 840 that includes TFT substrate 842, liquid crystal 844, color filter substrate 846, and driving module 848) (*id*. at 50), "a constricted convection plate placed behind and substantially parallel with the posterior surface" (bottom plate 210) (*id*. at 56–57), and "a fan positioned to draw air between the constricted convection plate and the posterior surface" (plurality of fans 222a) (*id*. at 57–58). Patent Owner responds that Na does not disclose a posterior surface on the rear side of the PCB or a constricted convection plate. PO Resp. 40–43. We address each argument in turn below.

a) "a posterior surface on the rear side of the PCB"

Petitioner first identifies Na's driving substrate 130 as "a printed circuit board (PCB) having front and back sides." Pet. 54 (citing Ex. 1002 ¶ 201) (emphasis omitted). Petitioner then provides an annotated version of

Na's Figure 3, reproduced below, to identify the "posterior surface on the rear side of the PCB":

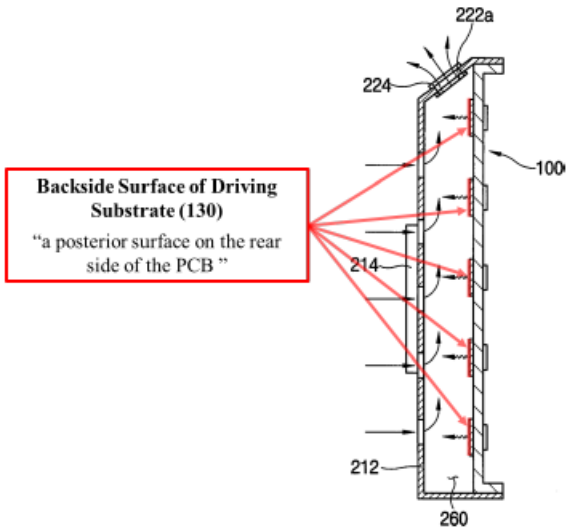

Annotated Figure 3 depicts "a side view for explaining a cooling process of the backlight unit of FIG. 1," with Petitioner's addition of red arrows pointing to what Petitioner labels as the "backside of surface driving substrate 130." Petitioner explains that the "posterior surface in Na corresponds to the outmost surface of the rear side of the portion of driving substrate 130 facing the inner space 260, which is illustrated in Figure 3 as the space located between the areal light source 100 and the storage container 200 with its bottom plate 210 . . . ." *Id*. (citing Ex. 1002 ¶ 202; Ex. 1010, 4–5, Fig. 3).

Patent Owner argues that

> a POSITA would understand from the plain language of the claims that the "posterior surface" of claim 4 is distinct from the "rear side of the PCB" (which is another surface) and that the claimed "posterior surface" must be placed "<u>on</u> the rear side of the PCB" (i.e., behind the PCB and placed against it).

PO Resp. 40 (citing Ex. 2006 ¶¶ 95–96). In support of this contention, Patent Owner argues that the '322 patent explains that heat generated by the LEDs can be transferred to the posterior surface of the backlight assembly, and "removed by air within the constricted convection channel." *Id*. at 41 (citing Ex. 1001, 4:57–60). Patent Owner argues that, in contrast, Na teaches that "heat is convectively removed directly from driving substrates 130, which are directly exposed to convective air flow provided by fan 224 with no conduction to a separate posterior surface." *Id*. (citing Ex. 1010, Fig. 3). Therefore, according to Patent Owner, "Petitioner's identification of the 'posterior surface on the rear side of the PCB' in Na as the 'rear side of the PCB' itself is incorrect." *Id*.

We disagree. The '322 patent does not define "back side[]" or "rear side" of the PCB, which appear only in the claims of the '322 patent. This tends to undermine Patent Owner's suggestion that the "posterior surface" of the PCB must be distinct from the "rear side" of the PCB. Moreover, neither Patent Owner nor Mr. Gershowitz points us to, nor do we discern, any teachings in the '322 patent that support a requirement that the "posterior surface" and the "rear side" of the PCB are distinct surfaces. In particular, Mr. Gershowitz's testimony in support of a "distinct" construction is based on his interpretation of the words "on the" in claim 4's recited "posterior surface *on the* rear side of the PCB." Ex. 2006 ¶¶ 95–96. Mr. Gershowitz testifies that "[i]f the posterior surface was the rear side of the PCB, the claim would have said so," but does not cite anything in the '322 patent that supports his interpretation. *See id.* Given that his testimony amounts to speculation divorced from the context of the specification, Mr. Gershowitz's testimony is entitled to little weight.

The ’322 patent provides little guidance regarding the nature of the claimed PCB. In that regard, the ’322 patent states:

> In an exemplary embodiment, the display posterior 22 may be the posterior surface of a backlight assembly. The backlight assembly may comprise a printed circuit board (PCB) with a plurality of LEDs mounted on the anterior surface. The PCB may have a low level of thermal resistance between the anterior and posterior surfaces such that heat which is generated by the LEDs may be transferred to the posterior surface of the backlight assembly, and subsequently removed by air within the constricted convection channel. The PCB may comprise a metal core and the posterior surface may be metallic so that air within the constricted convection channel may cool the metallic posterior surface (and subsequently the backlight assembly) more easily and efficiently.

Ex. 1001, 4:52–65. Accordingly, the ’322 patent teaches that: (1) the PCB, which comprises the backlight assembly, has LEDs mounted on its anterior surface; (2) heat generated by the LEDs is transferred to the posterior surface of the PCB (i.e., the backlight assembly), and (3) the posterior surface of the PCB may be metallic so that air from within the constricted convection channel can easily and efficiently cool that posterior surface. *Id*. Taken together, these disclosures in the ’322 patent indicate that the claimed “posterior surface on the rear side of the PCB” encompasses a PCB where the posterior surface and the rear side are the same surface.

Based on the record before us, we find that Petitioner establishes that Na teaches “a posterior surface on the rear side of the PCB” as required by claim 4.

b) "a constricted convection plate placed behind and substantially parallel with the posterior surface of the PCB"

Petitioner provides annotated versions of Na's Figures 1 and 3, reproduced below, to illustrate its contention that Na teaches the claimed "constricted convection plate placed behind and substantially parallel with the posterior surface of the PCB."

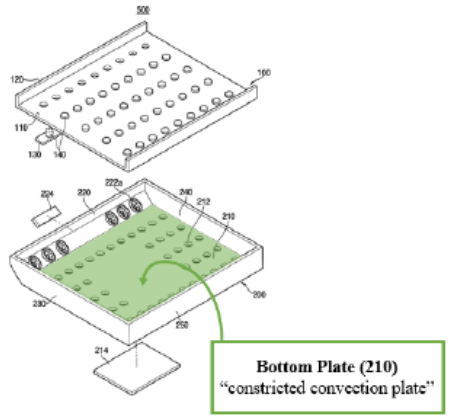

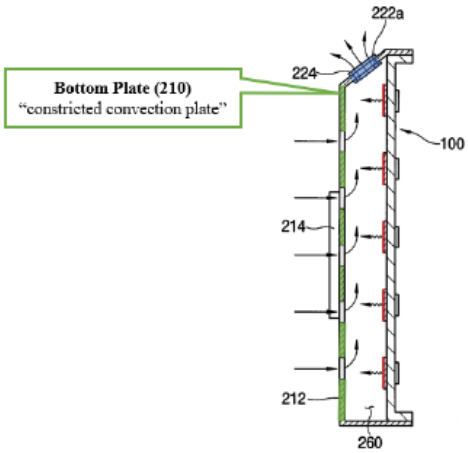

Pet. 55–56 (citing Ex. 1010, 4, Figs. 1, 3). Annotated Figure 1 (top) is an exploded perspective view of a backlight unit according to an example described in Na, to which Petitioner added green shading in an area Petitioner labels as bottom plate (210) and identifies as a constricted convection plate. *Id.*; Ex. 1010, 1. Annotated Figure 3 (bottom) is a side

view for explaining a cooling process of the backlight unit in Figure 1, with Petitioner's additions of green shading to the area identified as bottom plate (210), constricted convection plate, red shading to the LEDs (not numbered), and blue shading to fans 222a. Pet. 55–56; Ex. 1010, 1.

Referring to annotated Figures 1 and 3, Petitioner contends that storage container 200 forms inner space 260, through which air is drawn to cool the backlight unit. Pet. 55 (citing Ex. 1010, 5, Fig. 1). Petitioner contends that bottom plate 210 has a rectangular flat plate shape, and fans 222a operate to flow air from inner space 260 to the outside. *Id*. at 55–56 (citing Ex. 1010, 4). Petitioner notes that "Na specifically teaches that 'the cooling effect is increased by a free convection phenomenon or a forced convection resulting from operation of the components,'" and contends that "a POSITA would have understood that bottom plate 210 constricts airflow in order to achieve the desired convective cooling effect and is therefore the claimed 'constricted convection plate.'" *Id*. at 56–57 (citing Ex. 1010, 4–5; Ex. 1002 ¶ 205). In addition, Petitioner notes Na's teaching that "through-holes in the bottom plate 210 may be optimized." *Id.* at 57 (citing Ex. 1010, 5; Ex. 1002 ¶ 205).

Patent Owner argues that bottom plate 210 is not a "constricted convection plate" because it is not configured to form a part of a constricted convection channel. PO Resp. 42. Patent Owner argues that bottom plate 210 "is covered with through-holes 212" and, therefore, "Na teaches a cooling chamber behind the backlight where air flows into the chamber via through holes 212 of the hole-covered back plate 210 of its housing, which 'functions as an intake unit through which external air is sucked.'" *Id*. (citing Ex. 1010, 4, Figs. 1, 3). Patent Owner argues that "a POSITA would

not understand airflow to be 'constricted' by a porous plate with fifty large through-holes dispersed throughout it." *Id*. (citing Ex. 2006 ¶¶ 99–100).

Petitioner replies that Na "disclos[es] that, although the through holes can be formed in the bottom plate, 'the through-holes may be further formed in the first to fourth sidewalls, or may be formed only in the first to fourth sidewalls.'" Pet. Reply 13 (citing Ex. 1010, 5). According to Petitioner, "a POSITA would have understood Na's disclosure to include an embodiment where there are no through-holes on bottom plate 210 and through-holes on one or more of the sidewalls." *Id*. (citing Ex. 1002 ¶ 205). Patent Owner responds that "Na does not teach forming through-holes in 'any one or more of the first to fourth sidewalls' but <u>not</u> the bottom plate." PO Sur-reply 14 (citing Ex. 1010, 5; PO Resp. 59–60).

After considering the parties' arguments, and the evidence of record, we find that Petitioner establishes that Na teaches "a constricted convection plate placed behind and substantially parallel with the posterior surface of the PCB" as required by claim 4. In particular, we are persuaded that Na's bottom plate 210, without through-holes, teaches the recited "constricted convection plate." *See, e.g.*, Ex. 1002 ¶ 205; Ex. 1010, 5, Fig. 1. Na suggests this when it states:

> [A]lthough the through-holes are formed on the bottom plate, the through-holes may be further formed in the first to fourth sidewalls, or may be formed only in the first to fourth sidewalls. That is, the through-holes may be formed on a bottom plate and in any one or more of the first to fourth sidewalls.

Ex. 1010, 5. The express statement that though-holes "may be formed *only* in the first to fourth sidewalls" supports the exclusion of through-holes in the bottom plate. *Id*. (emphasis added); *see also* Ex. 1002 ¶ 205 (Mr. Smith-

Gillespie testifying that a POSITA would have understood that Na teaches an embodiment with through-holes on the sidewalls and no through-holes on bottom plate 210) (citing Ex. 1010, 5, Figs. 2, 3). We further find that a POSITA would have understood, based on this teaching in Na, that through-holes could be formed (1) only in bottom plate 210, (2) in bottom plate 210 and in the first to fourth sidewalls, or (3) only in the first to fourth sidewalls. Ex. 1002 ¶ 205; *see also* Ex. 1053 ¶ 124 (Mr. Gershowitz testifying in related IPR2023-00199 that "[t]he configurations taught by Na involve modifying one or more of the sidewalls 220-250 to add through-holes, either in addition to the through-holes 212 in the bottom plate 210 or *using a bottom plate 210 that does not have through holes 212*." (emphasis added)). We also decline to narrowly read Na as only supporting the exclusion of through-holes from the sidewalls, because "[a] person of ordinary skill is also a person of ordinary creativity, not an automaton." *See KSR Int'l Co. v. Teleflex Inc.*, 550 U.S. 398, 421 (2007).

We disagree with Patent Owner that Petitioner "misconstrues Mr. Gershowitz's testimony (from another IPR proceeding) to introduce a *new* invalidity theory [in the Reply] where through-holes are present only in sidewalls 220 and 250 but not in sidewalls 230 and 240." PO Sur-reply 14–15. In the Reply, Petitioner states:

> MRI's expert Mr. Gershowitz agreed in his declaration submitted in the related '595 patent[2] IPR that "[t]he configurations taught by Na involve modifying **one or more of the sidewalls 220–250** to add through-holes, either in addition to

[2] U.S. Patent No. 8,854,595 B2 ("the '595 patent"). The '322 patent issued from an application that was filed as a continuation of the application that issued as the '595 patent. Ex. 1001, code (63).

> the through-holes 212 in the bottom plate 210 or using a bottom plate 210 that does not have through holes."

Pet. Reply 13 (citing Ex. 1053 ¶ 124). We reviewed the cited testimony and it appears that Petitioner correctly quoted Mr. Gershowitz in this passage. And we do not see, in either this passage or elsewhere in Petitioner's Reply, an unpatentability theory premised on through-holes being present only in sidewalls 220 and 250 but not in sidewalls 230 and 240. Accordingly, we do not understand Petitioner's Reply to be introducing a new theory as Patent Owner contends.[3] *See* PO Sur-reply 14–15 ("Na does not teach forming through holes in 'any one or more of the first to fourth sidewalls' but <u>not</u> on the bottom plate, so its new invalidity theory has not support in Na. Accordingly, this untimely and unsupported new theory of unpatentability need not be considered." (internal citations omitted)).

We also find that Na's storage container 200 (which includes bottom plate 210, first sidewall 220, second sidewall 230, third sidewall 240, and fourth sidewall 250) and the rear surface of driving substrate 130 (i.e., the posterior surface on the rear side of the PCB) define an area (inner space 260) through which Na's fans "are operated to flow air from the inner space to the outside" thereby increasing the cooling effect through "a free convection phenomenon or a forced convection phenomenon." *Id*. (citing Ex. 1010, 4–5, Figs. 1, 3). Accordingly, we are persuaded by Petitioner's

---

[3] In any event, as Petitioner notes in the Petition, "Na discloses that the through-holes in the bottom plate 210 may be optimized" (Pet. 57), and Mr. Smith-Gillespie confirms that "[a]lthough the through-holes can be formed on the bottom plate, "the though-holes may be further formed in the first to fourth sidewalls, or may be formed *only in the first to fourth sidewalls*" (Ex. 1002 ¶ 205 (citing Ex. 1010, 5) (emphasis added)).

contention that a POSITA would have understood that bottom plate 210 constricts airflow to achieve the desired convective cooling effect. *Id*. at 57 (citing Ex. 1002 ¶ 205); *see also id*. ("Further, Na discloses that the through-holes in the bottom plate 210 may be optimized." (citing Ex. 1010, 5; Ex. 1002 ¶ 205)).

c) Conclusion: Claim 4

Other than the arguments discussed above, Patent Owner does not dispute Petitioner's evidence that Na teaches the limitations of claim 4. *See* PO Resp. We also reviewed Petitioner's explanations and supporting evidence as to how Na teaches the other limitations of claim 4, and we agree with, and adopt as our own, Petitioner's analysis. Pet. 50–54, 57–58; Ex. 1002 ¶¶ 188–203, 207–209. Accordingly, we find that Na teaches all of the limitations recited in claim 4. Pet. 50–58; Ex. 1002 ¶¶ 188–209.

3. Analysis of Claim 9

Independent claim 9 is directed to a system for cooling an electronic display, wherein the electronic display comprises "a front display surface and a posterior surface where no electronics are mounted to the posterior surface of the electronic display." Ex. 1001, 10:40–44. Petitioner contends that "[t]he combination of Na's liquid display panel 840 and areal light source device 100 is 'an electronic display.'" Pet. 61 (citing Ex. 1010, 2–4, 6, 8–9, Figs. 13, 14; Ex. 1002 ¶¶ 190, 221) (emphasis omitted).

Petitioner provides annotated versions of Na's Figures 13[4] and 9, reproduced below, to illustrate its contentions.

[4] Petitioner mistakenly refers to Figure 13 as Figure 3 in the Petition, which we recognize as a typographical error. Pet. 61–62.

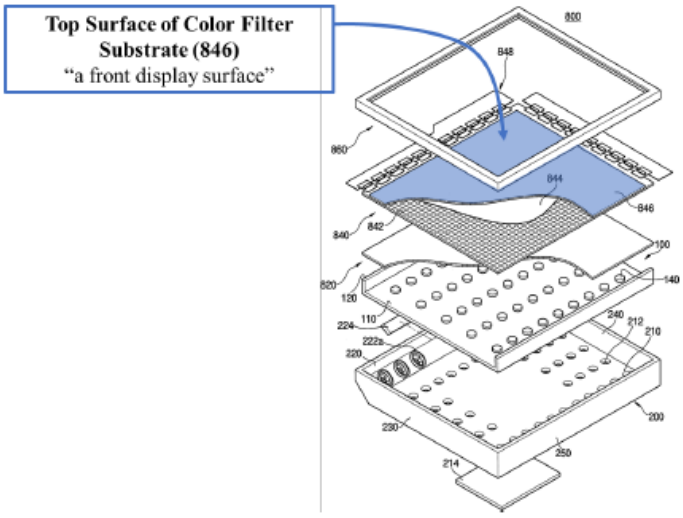

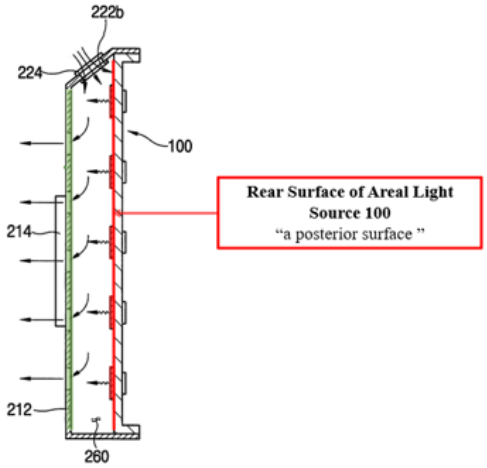

Id. at 61–62. Annotated Figure 13 (top) is an exploded perspective view of a liquid display device having the backlight unit depicted in Na's Figure 1 (not shown), to which Petitioner added blue shading to an area it indicates is "top surface of color filter substrate 846" that identifies as "a front display surface." *Id*. at 61; Ex. 1010, 2. Annotated Figure 9 (bottom) is a side view for explaining the cooling process of the backlight unit depicted in Figure 1 (not shown), to which Petitioner added red shading to what it indicates is the rear surface of areal light source 100 and identifies as "a posterior surface," and green shading to bottom plate 210 (not labeled). Pet. 62; Ex. 1010, 2.

> Referring to annotated Figures 13 and 9, Petitioner contends that
>
> the upper most top surface of the liquid display panel 840 of Na, which is the top surface of the color filter substrate 846 (colored blue), corresponds to the claimed "front display surface," and the bottom most surface of the areal light source device 100 corresponds to the claimed "posterior surface of the electronic display."

Pet. 61–62 (citing Ex. 1010, Figs. 13, 9 (annotated); Ex. 1002 ¶¶ 220–221) (emphasis omitted). Petitioner contends that "no electronics are mounted to the posterior surface of areal light source 100." *Id*. at 62 (citing Ex. 1002 ¶ 222). Petitioner also contends that bottom plate 210 meets the "a constricted convection plate behind the posterior surface of the display covering a majority of the posterior display surface" limitation of claim 9. *Id*. at 62–63 (citing Ex. 1010, Fig. 9; Ex. 1002 ¶ 226).

Patent Owner argues that bottom plate 210 does not teach "a constricted convection plate placed behind the posterior surface of the display" because bottom plate 210 is a surface within the interior of Na's backlight assembly. *See* PO Resp. 35–39. In support of this argument, Patent Owner cites Na's statement with respect to Figure 13 that "liquid crystal display device 800 includes a backlight unit 500" together with Na's disclosure of backlight unit 500 as including bottom plate 210 of storage container 200. *Id*. at 35–36 (emphasis omitted) (citing Ex. 1010, 8, Figs. 1, 13); *see also* PO Sur-reply 11–12 (similar argument). According to Patent Owner, "the most posterior portion on the outside of an electronic display with a backlight assembly will necessarily be 'the posterior surface of a backlight assembly.'" PO Sur-reply 13 (citing Ex. 2006 ¶¶ 90–91). Therefore, according to Patent Owner, Petitioner should have identified bottom plate 210 as the claimed "posterior surface of the electronic display."

PO Resp. 38 (citing Ex. 2006 ¶¶ 89–91); *see also* PO Sur-reply 13 (citing Ex. 1010, Fig. 13) (similar argument).

Patent Owner's argument against Petitioner's mapping of the recited "posterior surface of the electronic display" to Na's teachings hinges on Na's description that storage container 200 is part of Na's "backlight unit." *See* Ex. 1010, 8. Patent Owner's argument also assumes that Na's "backlight unit" including storage container 200 is the same thing as the recited "electronic display" in claim 9. Petitioner, however, maps the recited "electronic display" to Na's liquid crystal display panel 840 and areal light source device 100. Pet. 61–62. Na's storage container 200 is not part of that mapping. Moreover, the '322 patent expressly contemplates that the "posterior display surface" of the "electronic display" can be the opposite side of the surface on which LEDs are mounted when it explains that "[i]n an exemplary embodiment, the display posterior 22 may be the posterior surface of a backlight assembly" and "[t]he backlight assembly may comprise a printed circuit board (PCB) with a plurality of LEDs mounted to the *anterior* surface." Ex. 1001, 4:52–55 (emphasis added). That is exactly what Petitioner mapped here insofar as the bottom most surface of Na's areal light source 100 is the opposite side of the surface on which Na's LED light sources 140 are mounted. *See* Pet. 61–62 (citing Ex. 1010, 4, Fig. 3). Thus, we are persuaded that the rear side of Na's areal light source 100 teaches the recited "posterior surface of the electronic display." *See, e.g.*, Ex. 1002 ¶ 220; Ex. 1010, 1, 4, 8. For similar reasons, we reject Patent Owner's argument that Na's bottom plate 210 must be the "posterior surface of the electronic display" (PO Resp. 38; PO Sur-reply 13), because that argument is premised on the language of Na, not the challenged claims.

Patent Owner also argues that Na teaches mounting electronics to the posterior surface of the electronic display because "Na's driving circuit 214 is mounted to bottom plate 210." PO Resp. 42–43 (citing Ex. 1010, 4, Figs. 1–3, 13). As set forth above, we disagree with Patent Owner that Na's bottom plate 210 is the claimed "posterior surface of the electronic display." Because we find that Petitioner establishes that the bottom most surface of the areal light source device 100 corresponds to the recited "posterior surface of the electronic display," and Na does not teach mounting electronics to the bottom most surface of areal light source device 100, we are also persuaded that Petitioner establishes that "no electronics are mounted to the posterior surface of the electronic display" as required by claim 9. And, for the reasons set forth in Section II.C.2.b, *supra*, and the Petition, we also find that Petitioner establishes that Na's bottom plate 210 corresponds to the recited "constricted convection plate behind the posterior surface of the display covering a majority of the posterior display surface." Pet. 62–63 (citing Ex. 1010, Fig. 9; Ex. 1002 ¶¶ 224–227).

Other than the arguments discussed above, Patent Owner does not dispute Petitioner's evidence that Na teaches the limitations of claim 9. *See* PO Resp. We also reviewed Petitioner's explanations and supporting evidence as to how Na teaches the other limitations of claim 9, and we agree with, and adopt as our own, Petitioner's analysis. Pet. 60–64; Ex. 1002 ¶¶ 215–222, 227–233. Accordingly, we find that Na teaches all of the limitations recited in claim 9. Pet. 60–64; Ex. 1002 ¶¶ 215–233.

4. Analysis of Claims 8 and 10

Petitioner contends that Na teaches or discloses all of the elements of claims 8 (which depends from claim 4) and 10 (which depends from claim

9). Pet. 58–60, 64; Ex. 1002 ¶¶ 211–215, 235. Patent Owner does not dispute that Na teaches the limitations of these claims. *See* PO Resp.

We reviewed Petitioner's explanations and supporting evidence as to how Na teaches the limitations of claims 8 and 10, and we agree with, and adopt as our own, Petitioner's analysis. Pet. 58–60, 64; Ex. 1002 ¶¶ 211–215, 235. Accordingly, we find that Na teaches all of the limitations recited in claims 8 and 10.

5. Analysis of Claim 16

Claim 16 depends from claim 9, and further recites that "the electronic display comprises an LED backlight LCD display where the posterior surface is the rear surface of a backlight assembly." Ex. 1001, 11:10–13. Petitioner contends that "the 'posterior surface' of the 'electronic display' is the backside surface of areal light source 100, which is the rear surface of the backlight assembly." Pet. 65 (citing Ex. 1002 ¶ 238) (emphasis omitted). Patent Owner reiterates the argument it made with respect to claim 9 that "Na is clear that bottom plate 210 is the rear surface of backlight assembly 500." PO Resp. 39–40 (citing Ex. 1010, 4, Figs. 1–3, 13; Ex. 2006 ¶ 91). We reviewed Petitioner's explanations and supporting evidence as to how Na teaches the limitations of claim 16, and we agree with, and adopt as our own, Petitioner's analysis. Pet. 64–65; Ex. 1002 ¶¶ 235–238. Accordingly, for the reasons set forth above with respect to claim 9 and in the Petition, we are persuaded that Petitioner establishes that Na teaches all of the elements of claim 16. Section II.C.3, *supra*; Pet. 64–65; Ex. 1002 ¶¶ 235–238.

D. Asserted Obviousness over Na and Kim

Petitioner contends that claims 7, 12, and 13 would have been obvious over the combined teachings of Na and Kim. Pet. 65–69.

1. Overview of Kim

Kim "provide[s] a cooling fan unit with improved cooling efficiency by efficiently cooling heat generated from a backlight unit, and a display apparatus having the same." Ex. 1005, 1:46–49. In particular, Kim describes "a display apparatus having a casing in which an opening part is formed" that includes a liquid crystal display, a backlight unit, a shield cover, and a cooling fan unit. *Id*. at 1:57–67.

Figure 5 of Kim is reproduced below.

FIG. 5

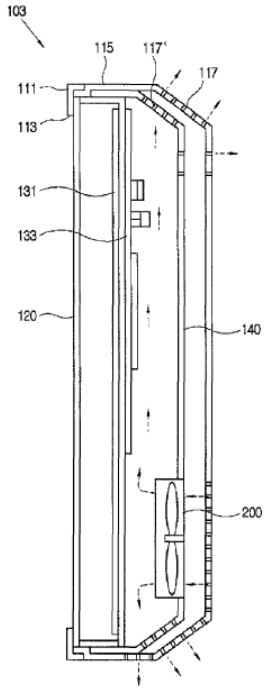

Figure 5 is schematic view of a cooling system described in Kim. Ex. 1005, 3:50. Display body 103 includes liquid crystal display panel 120, backlight

unit 130 (not labeled) comprising light source 131, circuit board 133, shield cover 140, and cooling fan unit 200. *Id*. at 4:4–6, 4:33–35. Front casing 111, with opening part 113, supports liquid crystal display panel 120 and backlight unit 130. *Id*. at 4:9–15. Rear casing 115, on the lateral and rear side of liquid crystal display panel 120, has a plurality of air slits 117 through which air produced by cooling fan 210 (not labeled) comes in and out. *Id*. at 4:22–24.

Shield cover 140, on the rear side of backlight unit 130, is supported by at least one of backlight unit 130 and the casing, and a space is formed between shield cover 140 and backlight unit 130. Ex. 1005, 4:52–55. Shield cover 140 has a plurality of air slits 117′ through which flowing air produced by cooling fan 210 comes in and out. *Id*. at 4:59–61. Cooling fan unit 200 is placed in a lower central portion of shield cover 140, and can alternatively be placed in a central or upper portion of shield cover 140 if necessary. *Id*. at 5:38–41.

Kim explains that "cooling fan 210 generates cooling air to cool the heat generating parts such as the light source 131 and the circuit board 133 of the backlight unit 130." Ex. 1005, 5:24–26. "[C]ooling fan 210 may draw in the cooling air from the outside into the heat generating parts or discharge the cooling air to the outside through the heat generating parts depending on its rotation direction." *Id*. at 5:42–45. In addition, a plurality of cooling fans 210 "may be provided . . . in consideration of the size of the backlight unit 130, the capacity of the cooling fan 210, etc." *Id*. at 5:31–33.

2. Analysis of Claim 7

Claim 7 depends from claim 4 and further requires "a housing which contains the liquid crystal stack, backlight assembly, constricted convection

plate, and fan" and "an entrance aperture within the housing which permits external ambient air to enter the housing and flow between the constricted convection plate and the posterior surface of the PCB." Ex. 1001, 10:30–36. Petitioner contends that "Na discloses or renders obvious claim 4" and "Kim discloses or renders obvious the claimed housing." Pet. 65 (citing Pet. 37–38, 50–58; Ex. 1002 ¶ 241). In particular, Petitioner contends that "Kim's LCD has a 'housing' in the form of 'a casing 100 that accommodates and supports the [LCD] display panel 120 and the backlight unit 130 to form an external shape, and comprises a front casing 111 and a rear casing 115." *Id*. at 37 (citing Ex. 1005, 4:8–12) (emphasis omitted). Petitioner contends that Kim also teaches that "[t]he rear casing 115 has a plurality of air slits 117 through which air produced by a cooling fan 210 comes in and out." *Id*. at 38 (citing Ex. 1005, 4:22–25) (alteration in original). According to Petitioner, air slits 117 are entrance apertures that permit external air to enter the housing, which then flows between the constricted convection plate and the posterior surface of the PCB. *Id*. (citing Ex. 1002 ¶ 144; Pet. 33–34).

Petitioner further contends that a POSITA would have been motivated to improve Na's backlight unit and LCD device "by adding an outer housing, as disclosed by Kim, to enclose Na's 'liquid crystal stack', 'backlight assembly', 'constricted convection plate' and 'fan.'" Pet. 65 (citing Ex. 1010, code (57); Ex. 1002 ¶ 241). Petitioner contends that "[b]oth Na and Kim are concerned with efficient cooling of the posterior display surface of an LCD, and both references use cooling mechanisms employing fans, entrances and exits to a cooling channel." *Id*. at 66 (citing Ex. 1002 ¶ 243). Petitioner notes that Na's driving circuits 214 and 224 are exposed to ambient air so it would have been obvious to protect these

circuits "by adding an external housing behind bottom plate 210 and enclosing the display, while allowing ambient air to enter the housing and flow between the Na's bottom plate 210 and the posterior surface of driving circuit 130, as contemplated by Kim's vented housing." *Id*. (citing Ex. 1002 ¶ 243). According to Petitioner, this modification "would have involved the use of one known technique to improve similar devices in the same way with predictable results." *Id*. (citing Ex. 1002 ¶ 243).

Having reviewed the complete trial record, we are persuaded that a POSITA would have been motivated to combine the teachings of Na and Kim as proposed with a reasonable expectation of success. Pet. 65–67; Ex. 1002 ¶¶ 241–247. In particular, we credit Mr. Smith-Gillespie's testimony that

> [a] POSITA in March 2008 would have understood that an LCD device contained within a device like a liquid crystal TV needs to be contained within some kind of housing, and thus would have been motivated to employ Kim's solution because it yields predictable results. A POSITA would have a reasonable expectation of success from taking advantage not only of Na's cooling system design, but then extending those advantages via Kim's further protection and discharge of the heater air to outside the housing. In such a configuration, a POSITA would have understood that it would have been advantageous not only to convey cooling air through the "inner space 260" (formed between bottom plate 210 and the rear surface of Na's areal light source 100 (the "posterior display surface")) to outside of the sidewalls of the storage container 200, but also to displace the heated air outside of the entire display encased by the external housing, as contemplated by Kim.

Ex. 1002 ¶ 244.

We considered Patent Owner's arguments and find them unavailing for the following reasons. Patent Owner argues that "Petitioner fails to

explain a relationship between Kim's external housing and the concern with 'efficient cooling of the posterior surface of an LCD'" and "Kim teaches air flow against the posterior surface of an LCD whereas Na teaches flow *within* an LCD and thus Petitioner is mistaken about their similarities." PO Resp. 44 (citing Ex. 2006 ¶ 105). Petitioner, however, does not propose combining Na's cooling system with Kim's cooling system. Instead, Petitioner argues that a POSITA would have included Kim's outer housing in Na's liquid crystal display with its cooling system to form a fully packaged LCD electronic display. Pet. 65–66. Patent Owner further argues that "even if Kim's external housing were placed around Na, Na's first and second driving circuits 214 and 224 would still be exposed to ambient air." PO Resp. 44 (citing Ex. 2006 ¶ 104). But Mr. Smith-Gillespie recognizes that adding an external housing behind bottom plate 210 and enclosing the entire display "allows ambient air to enter and flow between bottom plate 210 and the posterior surface of driving circuit 130," which "would protect the driving circuits by controlling the flow of air that contacts them." Pet. Reply 14; Ex. 1002 ¶¶ 242–243.

Other than the arguments discussed above, Patent Owner does not dispute Petitioner's evidence that the combination of Na and Kim teaches all of the limitations of claim 7. *See* PO Resp. We are persuaded that Petitioner's discussion of the particular structures in Na and Kim, and the explanations in the Petition and the Smith-Gillespie Declaration, shows that the combination of Na and Kim teaches all of the limitations of claim 7. Pet. 65; Ex. 1002 ¶ 240.

3. Analysis of Claims 12 and 13

Petitioner contends that the combination of Na and Kim teaches all of the elements of claims 12 (which depends from claim 9) and 13 (which depends from claim 12). Pet. 67–69; Ex. 1002 ¶¶ 249–254. Patent Owner does not dispute that the combination of Na and Kim teaches the limitations of these claims. *See* PO Resp. Having reviewed the parties' arguments and evidence, we are persuaded that Petitioner's discussion of the particular structures in Na and Kim, and the explanations in the Petition and the Smith-Gillespie Declaration, shows that the combination of Na and Kim teaches all of the limitations of claims 12 and 13. Pet. 67–69; Ex. 1002 ¶¶ 249–254.

E. Asserted Obviousness over Na and Tachikawa

Petitioner contends that claim 11 would have been obvious over the combined teachings of Na and Tachikawa. Pet. 69–71.

1. *Overview of Tachikawa*

Tachikawa "relates to a plasma television and an image display device having a structure wherein the inside of the housing is cooled." Ex. 1026 ¶ 1. Figure 1 is reproduced below.

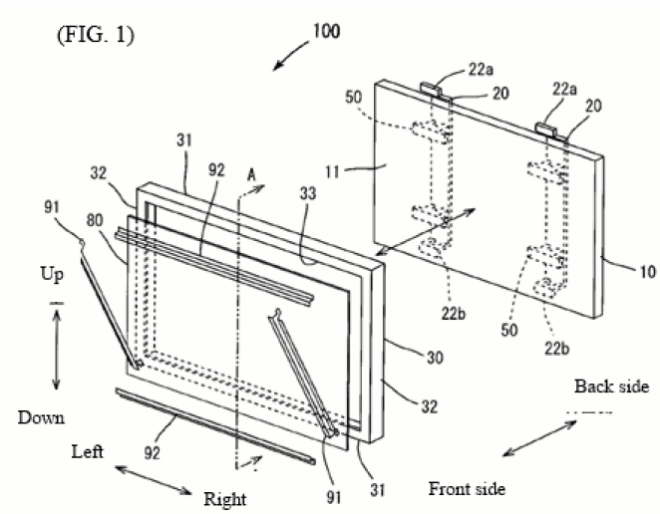

Figure 1 is a perspective view showing the assembly of a plasma television described in Tachikawa. *Id*. ¶ 17. Plasma television 100 includes front cabinet 30, rear cabinet 40, and plasma display panel ("PDP") 10. *Id*. PDP 10 in front cabinet 30 is "supported by two brackets 20 on the rear side." *Id*. ¶ 19. Attachments 50 are fixed at four positions on the upper, lower, left, and right sides of PDP 10, divided into two sets of left and right, each attached to one bracket 20. *Id*. "Each of the two brackets 20 is connected to stand member (not shown) which stands substantially perpendicular from an installation surface of the plasma television 100, thereby supporting substantially the entire plasma television 100 at a predetermined height." *Id*. Front cabinet 30 is also fixed to bracket 20. *Id*. at 20.

Tachikawa explains that bracket 20 is designed such that when it is connected to PDP 10 by attachments 50, upper and lower ends 22a and 22b "extend outward beyond the width of the PDP 10 in the vertical direction, and the extended upper and lower ends 22a and 22b and the upper and lower sides 31 and 3[2] of the front cabinet 30 are respectively fixed." Ex. 1026 ¶ 20. Rear cabinet 40 is also fixed to bracket 20. *Id*. According to Tachikawa, "the front cabinet 30, the PDP 10, and the rear cabinet 40 are all fixed to the bracket 20" and "it is possible to prevent the front cabinet 30, the PDP 10, and the rear cabinet 40 from loading each other." *Id*.

2. Analysis of Claim 11

Claim 11 depends from claim 9 and further requires "at least one bracket which connects the posterior surface with the constricted convection plate." Ex. 1001, 10:52–54. Petitioner contends that "Tachikawa's brackets 20, along with attachments 50 provide for enhanced mounting

stability," and "[a] POSITA would have been motivated to combine Na with the brackets disclosed by Tachikawa to improve Na's stability." Pet. 69–70 (citing Ex. 1026 ¶ 19; Ex. 1002 ¶¶ 256–257). Petitioner contends that, although Na teaches that "areal light source device 100 is easily coupled to the storage container 200," Na does not teach how to mount its LCD for use. *Id*. at 70 (citing Ex. 1010, 4). Petitioner further contends that because Na teaches "it 'has the advantage of being very small in volume and in weight' so as to be 'widely used for portable computers, communication devices, liquid crystal TVs, etc.'," "a POSITA would have been motivated to add a stand to Na's device to support it for its intended use." *Id*. (citing Ex. 1010, 2). According to Petitioner, a POSITA looking to modify Na in this way "would have been motivated to look to other electronic displays that had addressed similar heat removal, including plasma display panels," and "Tachikawa provides an example of such a stand and bracket structure." *Id*. at 70–71 (citing Ex. 1002 ¶ 259). Petitioner explains that "a POSITA would have envisioned, based on the teachings of Tachikawa, that the rear side surface of areal light source 100 would be fitted with brackets via a set of attachments to bottom surface 210 and an installation surface." *Id*. at 71 (citing Ex. 1002 ¶ 259).

Patent Owner responds that Tachikawa "provides no disclosure for placing brackets *within* a backlight as Petitioner proposes for Na's backlight 500," and "light sources within a backlight are not designed to be structural components that can support the weight of the entire display." PO Resp. 45 (citing Ex. 2006 ¶¶ 107–109). As set forth above with respect to claim 9, however, we disagree with Patent Owner that Na's back plate 210 is part of Na's "backlight unit." *See* Section II.C.3, *supra*.

Patent Owner also argues that "placing Tachikawa's brackets within Na's backlight 500 to connect the rear side surface of areal light source 100 to bottom plate [210] would cause the brackets to connect to Na's exposed driving substrates 130 without improving Na's stability." PO Resp. 45 (citing Ex. 2006 ¶ 108). Na explains that areal light source device 100 includes reflective plate 110, sidewall 120, driving substrate 130, and a plurality of LED light sources 140 as shown in Figure 1, reproduced below.

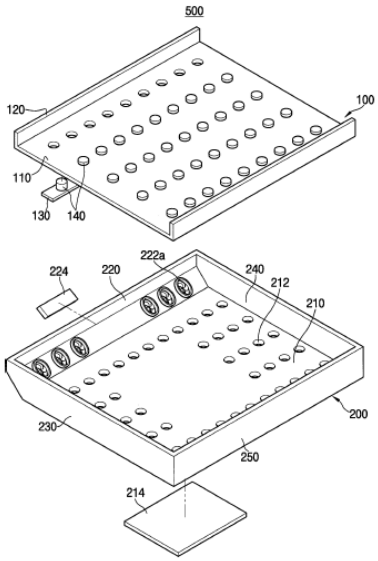

Ex. 1010, 4, Fig. 1. Figure 1 is an exploded view of Na's backlight unit 500, which includes areal light source device 100 and storage container 200. *Id*. at 1, 4. Petitioner's proposed modification, as we understand it, would add brackets to the rear surface of areal light source device 100, which does not appear to encompass driving circuit 130. Moreover, attaching the added brackets on the rear surface of areal light source device 100 to back plate 210 would further secure areal light source device 100 to storage container 200 (of which back plate 210 forms a part). *See also id*. at 4 ("[T]he first to fourth sidewalls 220, 230, 240, and 250 may be coupled to the reflective plate 110 of the areal light source device 100 in a manner of

hook coupling or the like."). We are persuaded that "[t]his adaptation would amount to the use of a known technique to improve similar devices the same way," and would provide the predictable result of supporting Na's display without compromising its cooling ability. Pet. 71 (citing Ex. 1002 ¶¶ 259–260).

Having reviewed the parties' arguments and evidence, and for the reasons set forth above with respect to claim 9 and in the Petition, we are persuaded that the combination Na and Tachikawa teaches all of the elements of claim 11. Section II.C.3, *supra*; Pet. 69–70; Ex. 1002 ¶¶ 255–256. We are also persuaded, for the reasons set forth in the Petition, that a POSITA would have been motivated to combine the teachings of Na and Tachikawa as proposed with a reasonable expectation of success. Pet. 70–71; Ex. 1002 ¶¶ 257–260.

F. Asserted Obviousness over Kim and Hong

Petitioner contends that claims 4 and 7 would have been obvious over the combined teachings of Kim and Hong. Pet. 27–39.

1. Overview of Hong

Hong "relates to a liquid crystal display device." Ex. 1029 ¶ 2. Hong's LCD device includes a backlight assembly and a liquid crystal panel disposed over an inner surface of a bottom case. *Id*. ¶ 25. The backlight assembly includes a plurality of LEDs, which may be arranged on a plurality of base printed circuit boards ("PCBs"). *Id*. ¶ 29. The base PCBs "are arranged in parallel on the bottom case" and "may contact or couple with the bottom case." *Id*.

2. Analysis of Claim 4

Petitioner contends that Kim teaches or suggests all of the limitations of independent claim 4, except for a printed circuit board with a plurality of LEDs mounted on the front side of the PCB. Pet. 27–36; Pet. Reply 3–6. Patent Owner responds that Kim does not disclose a constricted convection plate that is substantially parallel to the posterior surface. PO Resp. 21–27; PO Sur-reply 2–5. Patent Owner also argues that a skilled artisan would not have been motivated to combine Kim and Hong as Petitioner proposes. PO Resp. 27–30; PO Sur-reply 5–6. We address each argument in turn below.

a) "constricted convection plate placed behind and substantially parallel with the posterior surface of the PCB"

Petitioner contends that "Kim discloses a 'constricted convection plate' in the form of 'shield cover 140' that is 'provided on the rear side of the backlight unit 130.'" Pet. 33 (citing Ex. 1005, 4:52–55; Ex. 1002 ¶ 103). Petitioner provides an annotated version of Kim's Figure 5, reproduced below, to illustrate its contentions.

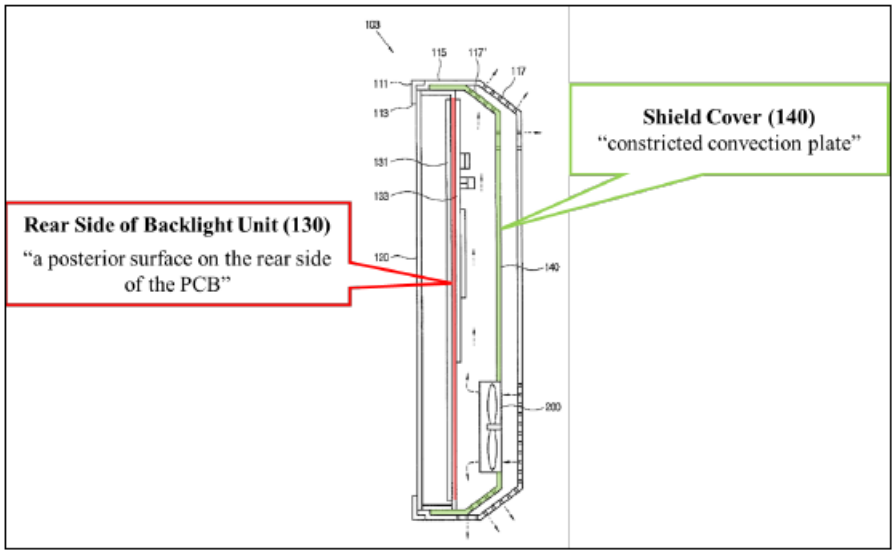

Id. at 34. Annotated Figure 5 is a schematic view of a cooling system described in Kim, with Petitioner's addition of red shading to what it indicates is the rear side of backlight unit 130 and identifies as "a posterior surface on the rear side of the PCB," and green shading to what it indicates is shield cover 140 and identifies as "constricted convection plate." *Id*.; Ex. 1005, 3:51.

Petitioner further contends that Kim's shield cover 140 "guides airflow to facilitate convective heat transfer from the backlight," and that a POSITA would have understood that shield cover 140 constricts air generated by the fan to cool the backlight. Pet. 34 (citing Ex. 1002 ¶ 131). According to Petitioner, "Kim achieves this constricted airflow by reducing the volume of the space behind the display which allows air from cooling fan 210 to flow across the backlight unit 130." *Id*. (citing Ex. 1002 ¶ 131).

Patent Owner argues that Kim's shield cover 140 is not a "constricted convection plate" as recited in claim 4. In particular, Patent Owner argues that "a plurality of air slits 117' are included throughout the periphery of shield cover 140 to allow air to freely flow from the fan outward on all sides through slits 117 in the rear cover 115." PO Resp. 22 (citing Ex. 1005, 4:58–61). Patent Owner further argues that "cooling air flows through the air slits 117' throughout the shield cover 140 and through the corresponding air slits 117 on the top and rear sides of the casing," such that air flows out of the casing in all directions. *Id*. at 24. According to Patent Owner, "[b]ecause air exits Kim's shield covers in all four directions (top, bottom, left, and right)," Kim's shield cover 140 does not form part of a constricted convection channel and therefore is not a constricted convection plate. *Id*. at 25 (citing Ex. 2006 ¶¶ 65–66).

Petitioner replies that "Kim teaches that its shield cover 140 is strategically formed and placed 'such that the flowing air produced by the cooling fan 210 can be efficiently guided' through a channel between the shield cover and the display posterior." Pet. Reply 3 (citing Ex. 1005, 4:59–63, 5:34–38). Petitioner also contends that "[n]either the claims nor the '322 patent specification require 'directional flow' or a channel enclosed on all four sides." *Id*. at 4–5. Patent Owner responds that "Kim teaches 'a guide member (not shown) that guides the cooling air generated by the cooling fan 210 in <u>various directions</u>'—the opposite of a channel." PO Sur-reply 3 (citing Ex. 1005, 5:53–55).

After considering the complete trial record, we are persuaded that Petitioner establishes that Kim's shield cover 140 corresponds to "a constricted convection plate" as recited in claim 4. Kim teaches shield cover 140 is "provided in the rear side of backlight unit 130, is supported by at least one of the backlight unit 130 and the casing 110, with a space formed between the shield cover 140 and the backlight unit 130." Ex. 1005, 4:52–55. Shield cover 140 also "comprises fan support 141," "may have a plurality of air slits 117′ through which flowing air produced by the cooling fan 210 comes in and out," and "may be formed in diverse shapes such that the flowing air produced by the cooling fan 210 can be efficiently guided." *Id*. at 4:58–63. Kim also teaches that

> cooling air generated by the cooling fan 210 contacts the light source 131 that is widely arranged on the rear side of the backlight unit 130 while the cooling air flows through a space among the backlight unit 130, the circuit board 133 and the shield cover 140. This allows the widely arranged light source 131 to be cooled efficiently.

Id. at 5:9–15. We credit Mr. Smith-Gillespie's testimony, which is consistent with and supported by the disclosures in Kim, that

> [b]ecause Kim's "shield cover 140" guides airflow to facilitate convective heat transfer from the backlight, it is my opinion that a POSITA would have understood that the "shield cover 140" constricts air generated by the fan in order to achieve its purpose [of] cooling the backlight. Kim achieves this constricted airflow effect by reducing the volume of the space behind the display panel using a shield cover which contains air slits 117 distal to the cooling fan 210 thereby causing air to flow across the backlight unit 130.

Ex. 1002 ¶ 131 (citing Ex. 1005, 5:34–38). Based on these descriptions in Kim, and Mr. Smith-Gillespie's supporting testimony, we are persuaded that Kim's shield cover 140 guides and constricts airflow to facilitate effective cooling of backlight unit 130, and is therefore the recited "constricted convection plate."

We also determine, based on the record before us, that the combination of Kim and Hong teaches that the constricted convection plate is "placed behind and substantially parallel with the posterior surface of the PCB." Referring to Kim's Figure 5 as annotated by Petitioner (reproduced above), Petitioner contends that "shield cover 140 is 'placed behind and substantially parallel with the posterior surface' of the backlight unit 130." Pet. 33–34. Petitioner further contends that, "[i]n combination with Hong, the shield cover 140 would be 'placed behind and substantially parallel with the posterior surface of the PCB.'" *Id*. at 34 (citing Ex. 1005, 5:37–38, 4:52–55, Fig. 5 (annotated); Ex. 1002 ¶ 131; Ex. 1011, 1; Ex. 1012, 6–8) (emphasis omitted).

Patent Owner argues that "[t]he cross-section view in Kim's Fig. 5 appears to show shield cover 140 substantially parallel to the posterior

display surface in one particular cross section," but "this figure is not to scale and thus not representative of the proportions and relative dimensions of Kim's design." PO Resp. 25. Patent Owner argues that "the specification is silent as to whether shield cover 140 should be substantially parallel to the posterior surface of the backlight 130." *Id*. at 26 (citing Ex. 2006 ¶¶ 67–69). Patent Owner further argues that "Kim's more-detailed Fig. 2 shows shield cover 140 of Kim has substantial topology" and that Figure 2 also shows that "the posterior surface of Kim's backlight assembly 130 is not a flat surface but includes a portion . . . that juts out and further includes circuit board 133 . . . with its own topology." *Id*. (citing Ex. 2006 ¶¶ 67–69).

After reviewing the parties' arguments and the evidence of record, we are persuaded that the combination of Kim and Hong teaches a constricted convection plate "placed behind and substantially parallel with the posterior surface of the PCB." In particular, both Figures 2 and 5 in Kim illustrate that shield cover 140 is substantially parallel to the rear side of backlight unit 130. Ex. 1005, Figs. 2, 5; *see also* Ex. 1002 ¶ 132 (Mr. Smith-Gillespie testifying that "[a]s seen from Figures 2 and 5 above, shield 140 is 'approximately parallel' to the rear side of backlight unit 130."). These Figures are consistent with Kim's explanation that shield cover 140 "is provided on the rear side of the backlight unit 130 . . . with a space between the shield cover 140 and the backlight unit 130." Ex. 1005, 4:52–55; *see also* Ex. 1002 ¶ 132 (Mr. Smith-Gillespie testifying that "because the rear side of the backlight unit 130 ('the posterior surface on the rear side of the PCB') is facing shield cover 140 . . . the shield cover 140 is 'placed behind . . . the posterior surface of the PCB."). As discussed in greater detail below, we are also persuaded that a POSITA would have been motivated to modify

Kim's backlight unit to include Hong's PCB with multiple LEDs mounted to its front side. *See* Section II.F.2.b, *infra*; Pet. 36–37.

We disagree with Patent Owner that Kim's Figures 2 and 5 are insufficient to show that shield cover 140 is substantially parallel to the posterior surface of the PCB. Patent Owner cites *Nystrom v. TREX Co., Inc.* for the proposition that, in the context of unpatentability, "'arguments based on drawings not explicitly drawn to scale in issued patents are unavailing' where 'the specification is completely silent on the issue.'" PO Resp. 26 (citing *Nystrom v. TREX Co., Inc.*, 424 F.3d 1136, 1149 (Fed. Cir. 2005)). In *Nystrom*, the limitation at issue recited "a ratio of said difference in thickness to the width of the board being about 1:40." *Nystrom*, 424 F.3d at 1148. The district court determined that the recited ratio was anticipated based on a model that TREX made from drawings contained in the asserted reference, "and not on drawing dimensions or a written disclosure of dimensions contained directly in the [reference] itself." *Id*. at 1149. The Federal Circuit determined that "the speculative modeling premised on unstated assumptions in prior art patent drawings cannot be the basis for challenging the validity of claims *reciting specific dimensions not disclosed directly in such prior art*." *Id*. (emphasis added). Here, claim 4 recites relative positioning ("substantially parallel"), not specific dimensions or proportions. Accordingly, we find that Petitioner's reliance on Kim's Figures 2 and 5 to establish the placement of shield cover 140 relative to the posterior display surface is proper. We also disagree with Patent Owner that the topology of the components depicted in Kim's Figures 2 and 5 would preclude those components from being placed substantially parallel to each

other. Neither Patent Owner nor Mr. Gershowitz explains how or why the topology of the surface affects its orientation relative to other surfaces.

b) Motivation to Combine Kim and Hong

Petitioner contends that Hong discloses backlight assembly 120 located behind liquid crystal panel 110 that includes a plurality of LEDs 124 arranged on a plurality of base PCBs 122 placed on an inner surface of bottom case 150. Pet. 31–32 (citing Ex. 1029 ¶¶ 25, 29, 33, Fig. 4; Ex. 1002 ¶¶ 124–126). Petitioner contends that "a POSITA would have understood that LEDs 124 are mounted on the 'front side of the PCB' and that the 'back side' of the PCB faces bottom case 150." *Id*. at 32–33 (citing Ex. 1029 ¶ 33, Fig. 4; Ex. 1002 ¶ 126) (emphases omitted).

Petitioner further contends that a POSITA "would have been motivated to modify Kim's backlight to include Hong's PCB with multiple LEDs mounted to its front side." Pet. 36 (citing Ex. 1002 ¶ 140). Specifically, Petitioner contends that "a POSITA would have known that Kim's LEDs need to be mounted on a first side of a PCB within backlight unit 130 in order to operate as intended and that Hong's PCB would have been suitable." *Id*. (citing Ex. 1002 ¶ 140). Petitioner contends that a POSITA would have "recognized the similarities between Hong's and Kim's backlight configurations and ascertained that Kim's LEDs (e.g., '[t]he light source 131 of the backlight unit 130 [which] is widely arranged on a plane of the backlight unit 130' (Ex. 1005, 4:43–45)) could be predictably mounted to Hong's base PCB 122." *Id*. at 37 (alterations in original, emphasis omitted). Petitioner contends that a POSITA also "would have recognized the cost savings using Hong's LED and PCB arrangement." *Id*.

(citing Ex. 1002 ¶ 141). In support of this contention, Petitioner relies on Mr. Smith-Gillespie's testimony:

> Since the cost of circuit board is directly and positively related to the area of the circuit board, a POSITA, looking to reduce backlight unit costs, would have been motivated to reduce the total PCB area in the Kim design by using the approach disclosed in Hong, wherein the LEDs are placed on a plurality of narrow circuit boards. This arrangement could reduce the circuit board area to ¼ of that in the Kim design and result in significant cost savings.

Ex. 1002 ¶ 141. Petitioner contends that "[t]he combination would have amounted to no more than the use of a known technique (LEDs mounted on narrow PCBs) to improve Kim's similar backlight to obtain predictable results." Pet. 37.

Patent Owner argues that Hong "discloses a fan-less cooling system comprising heat sinks and other high-conductivity materials such as metal core PCBs to conduct heat away from the LEDs so that passive (i.e., no fans) convective cooling can be effective." PO Resp. 27–28 (citing Ex. 1029 ¶ 12). Patent Owner argues that "[a] POSITA would understand that Kim's computer monitor was designed for indoor applications and thus would not have required the kind of high-powered LEDs for which Hong's metal core PCB would be desirable," and that, "[w]hile Hong shows that such metal core PCBs would be desirable to obtain a silent, passively cooled display with no fans, the claimed invention specifically requires fans, as does Kim." *Id*. at 28 (citing Ex. 2006 ¶¶ 71–73). According to Patent Owner, "Hong's PCB would have been an unnecessary cost for Kim's monitor with no expected benefit." *Id*.

Patent Owner also argues that Kim's cooling system design is incompatible with metal core PCBs, because Hong teaches that a heat sink should be placed adjacent to the PCB strips and LEDs to conduct heat away from the LEDs. PO Resp. 29 (citing Ex. 1029[5] ¶¶ 15, 38–39). Patent Owner argues that "[b]ecause Kim's design places circuit board 133 flush against the rear surface of the backlight, a POSITA would understand that introducing a metal core PCB into Kim's design to *increase* conductive heat transfer between its light source 131 and circuit board 133 would cause the system to overheat." *Id*. (citing Ex. 2006 ¶ 74[6]). Therefore, Patent Owner argues, "a POSITA would not have had a reasonable expectation of success in incorporating metal core PCBs into Kim's design." *Id*. (citing Ex. 2006 ¶ 74).

Petitioner responds that "Kim's display is agnostic about the type of LED PCB used therein, and at the time it would have been an (obvious) matter of routine design choice to utilize a PCB in Kim's display." Pet. Reply 6–7 (citing Pet. 36–37). Petitioner notes that it "does not argue that one would bodily incorporate Hong's thermal convection and heat sink into Kim's display." *Id*. at 7 (citing *MCM Portfolio LLC v. Hewlett-Packard Co.*, 812 F.3d 1284, 1294 (Fed. Cir. 2015)). Petitioner further contends that Patent Owner's "remaining arguments are also improperly focused on Hong's exemplary disclosure of a *metal core* PCB, which is not required by

---

[5] Patent Owner mistakenly cites to Exhibit 1006 (Cho), but the context is clear that Patent Owner intended to cite to Exhibit 1029 (Hong).
[6] Patent Owner mistakenly cites paragraph 109 of Exhibit 2006, which is directed to Petitioner's contention that claim 11 would have been obvious over the combined teachings of Na and Tachikawa. From the context, it appears that Patent Owner intended to cite paragraph 74 of Exhibit 2006.

claim 4 of the ’322 patent or relied on by [Petitioner] in the combination.” *Id*. (citing PO Resp. 27–29; Pet. 35, 39–40).

Having considered the complete trial record, we are persuaded that a POSITA would have been motivated to combine the teachings of Kim and Hong as proposed with a reasonable expectation of success. Pet. 36–37; Ex. 1002 ¶¶ 140–141. The modification proposed by Petitioner is supported by the record, which establishes that PCBs were known to be a part of backlight units in LCD devices to drive LEDs. *See, e.g.*, Ex. 1002 ¶¶ 123, 140; Ex. 1049, 33:11–13, 53:14–54:14, 80:12–21; Ex. 1029 ¶ 8.

In particular, Kim teaches that circuit board 133 that “applies or controls power to the light source 131 [LEDs] and so on is combined to the rear side of the backlight unit 130 and is connected to the controller 260,” and the LEDs are “widely arranged on a plane of the backlight unit and generate heat of high temperature when the [LEDs] emit[] light.” Ex. 1005, 4:38–46. Hong teaches a backlight assembly that includes a plurality of LEDs 124 “arranged on a plurality of base PCBs 122” that “may include a MCPCB (metal core printed circuit board) which may effectively absorb and transfer heat produced at the LED 124.” Ex. 1029 ¶ 29.

Mr. Smith-Gillespie credibly testifies that a POSITA would have recognized that Kim’s placement of LEDs in a wide arrangement on a plane of the backlight unit “suggests the use of a large area printed circuit board.” Ex. 1002 ¶ 141. Mr. Smith-Gillespie further credibly testifies that a POSITA would have been motivated to reduce backlight unit costs by reducing “the total PCB area in the Kim design by using the approach disclosed in Hong, wherein the LEDs are placed on a plurality of narrow circuit board” which would “result in a significant cost savings.” *Id*.; *see*

also DyStar Textilfarben GmbH & Co. Deutschland KG v. C.H. Patrick Co., 464 F.3d 1356, 1368 (Fed. Cir. 2006) ("[A]n implicit motivation to combine exists not only when a suggestion may be gleaned from the prior art as a whole, but when the 'improvement' is technology-independent and the combination of references results in a product or process that is more desirable, for example because it is stronger, cheaper, cleaner, faster, lighter, smaller, more durable, or more efficient are universal motivators to combine/modify prior art."). We agree with Petitioner that this is the use of a known technique (LEDs mounted on a PCB) to improve Kim's similar backlight to obtain predictable results with a reasonable expectation of success. Pet. 37 (citing Ex. 1002 ¶ 141); *see KSR*, 550 U.S. at 416 ("[W]hen a patent claims a structure already known in the prior art that is altered by the mere substitution of one element for another known in the field, the combination must do more than yield predictable results.").

We do not agree with Patent Owner's arguments that Kim's computer monitor "would not have required the kind of high-power LEDs for which Hong's metal core PCBs would be desirable" or that Kim's design would have been incompatible with metal core PCBs. PO Resp. 28–29. As we understand it, Petitioner proposes modifying Kim by mounting Kim's LEDs on the front side of a plurality of narrow circuit boards, such as Hong's base PCB 122, in order to reduce Kim's total PCB area, resulting in significant cost savings for Kim's design. Pet. 36–37; Ex. 1002 ¶¶ 140–141. Although Hong teaches that "base PCB 122 *may* include a MCPCB (metal core printed circuit board)," a POSITA "is also a person of ordinary creativity, not an automaton," and would draw on their own knowledge to determine the appropriate kind of PCB to use in a given application. Ex. 1029 ¶ 29

(emphasis added); *KSR*, 550 U.S. at 421; *see also* Ex. 1049, 54:3–14 (Mr. Gershowitz testifying that "as either necessitated by the design of the display or at the discretion of the designer, metal core PCBs could be used and were utilized in displays in" the 2008 time frame, and "they could have been used in indoor displays").

c) Conclusion: Claim 4

Other than the arguments discussed above, Patent Owner does not dispute Petitioner's evidence that the combination of Kim and Hong teaches all of the limitations of claim 4. *See* PO Resp. We reviewed Petitioner's explanation and supporting evidence as to how Kim and Hong teach the other limitations of claim 4 and we agree with, and adopt, Petitioner's analysis. Pet. 27–36; Ex. 1002 ¶¶ 112–128, 135–139. Accordingly, we find that the combination of Kim and Hong teaches all of the limitations of claim 4. Pet. 27–36; Ex. 1002 ¶¶ 112–139. We also find that a POSITA would have been motivated to combine the teachings of Kim and Hong as proposed with a reasonable expectation of success. Pet. 36–37; Ex. 1002 ¶¶ 140–141.

3. Analysis of Claim 7

Petitioner contends that the combination of Kim and Hong teaches all of the elements of claim 7, which depends from claim 4. Pet. 37–39; Ex. 1002 ¶¶ 142–149. Patent Owner does not dispute that the combination of Kim and Hong teaches the limitations of these claims. *See* PO Resp. Having reviewed the parties' arguments and evidence, we are persuaded that Petitioner's discussion of the particular structures in Kim and Hong, and the explanations in the Petition and the Smith-Gillespie Declaration, show that

the combination of Kim and Hong teaches all of the limitations of claim 7. Pet. 37–39; Ex. 1002 ¶¶ 142–149.

G. Asserted Obviousness over Kim, Hong, and Tachikawa

Petitioner contends that claim 5 would have been obvious over the combined teachings of Kim, Hong, and Tachikawa. Pet. 39–43; Ex. 1002 ¶¶ 150–163.

1. Analysis of Claim 5

Claim 5 depends from claim 4 and further requires "at least one bracket which connects the posterior surface with the constricted convection plate." Ex. 1001, 10:23–25. Petitioner contends that the combined teachings of Kim and Hong disclose all of the elements of claim 4, as discussed above. Pet. 39; *see supra* Section II.F.2.

Petitioner provides an annotated version of Kim's Figure 2,[7] reproduced below, to illustrate its contentions. Pet. 40.

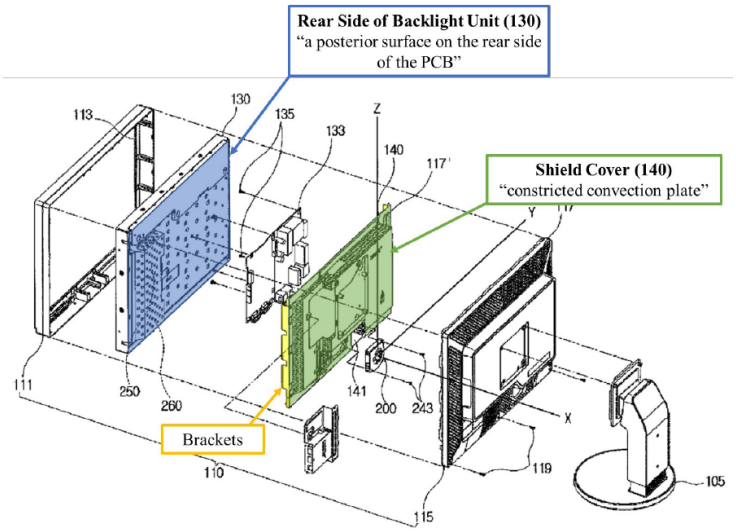

[7] In the Petition, Petitioner refers to this figure as Figure 5, instead of Figure 2. *Compare* Ex. 1005, Fig. 5, *with id*. at Fig. 2. We consider Petitioner's error to be typographical, and refer to it as Figure 2.

Kim's Figure 2 "is an exploded perspective view of a display apparatus" described in Kim, with Petitioner's annotations, including the addition of labels identifying structures as shield cover 40, the rear side of backlight unit 130, and brackets. Referring to annotated Figure 2, Petitioner contends that "a POSITA would have understood that Kim's shield cover 140 (i.e., 'constricted convection plate') [colored green] is connected to the backlight unit 130 using brackets (colored yellow)." Pet. 39–40 (citing Ex. 1005, Fig. 2 (annotated); Ex. 1002 ¶ 151). Petitioner also notes that "Kim teaches that the shield cover 140 'is supported by at least one of the backlight 130 and the casing 110.'" *Id*. at 40 (citing Ex. 1005, 4:52–55).

Petitioner then asserts that Tachikawa teaches that its "PDP 10 is housed in the cabinet 30 in a state of being supported by two brackets 20 on the rear side." Pet. 41 (citing Ex. 1026 ¶ 19). Petitioner contends that Tachikawa teaches that rear cabinet 40 covering the rear side of the plasma television is also fixed to bracket 20. *Id*. (citing Ex. 1026 ¶ 20). Petitioner also points to Tachikawa's teaching that brackets 20 are "connected to a stand member . . . which stands substantially perpendicular from an installation surface of the plasma television, thereby supporting substantially the entire plasma television at the predetermined height." *Id*. (citing Ex. 1026 ¶ 20; Ex. 1002 ¶¶ 153–154).

Petitioner contends that "[a] POSITA would have been motivated to modify the display disclosed by the combination of Kim and Hong with the brackets disclosed by Tachikawa to improve Kim's display serviceability and structural strength." Pet. 42 (citing Ex. 1002 ¶ 155). In particular, Petitioner asserts that Kim's shield cover 140 is connected to backlight unit 130 using brackets, which are obscured by casing 11 when assembled in

the case, and "additional effort would be required to access and separate the shield cover 140 from the backlight assembly 130 when servicing the backlight assembly or circuit board 133." *Id*. (citing Ex. 1002 ¶ 156). Accordingly, Petitioner contends, "a POSITA would have been inclined to look for alternative bracket options to connect Kim's shield cover 140 to backlight 130." *Id*. (citing Ex. 1002 ¶ 156).

Petitioner further contends that "[a] POSITA looking to modify the bracket structure in Kim would have been motivated to look to other electronic displays that had addressed similar heat removal, including PDPs," and that "[a]lternative bracket options would have been well known to the POSITA at the time of the filing of the '322 patent." Pet. 42 (citing Ex. 1002 ¶¶ 157–159). Petitioner contends that

> Tachikawa's brackets 20, along with attachments 50, allow removal of rear cabinet 40 with minimal effort, since the rear cabinet 40 is snapped on the PDP 10 through brackets 20. ([Ex. 1002], ¶ 161.) In addition, Tachikawa's mounting brackets provide for enhanced mounting stability. (*Id*., ¶ 162.) A POSITA would have envisioned, based on the teachings from Tachikawa, that the rear side surface of Kim's backlight unit 130 would be fitted with brackets via a set of attachments so that the shield cover 140 can be attached on the extended upper and lower ends (22a and 22b) of the brackets. (*Id*., ¶ 161.)

Id. at 42–43.

Patent Owner argues that "the alleged brackets in Kim's Fig. 5 connect to the *sides* of Kim's backlight 130 and *not* to its posterior surface as required by Claim 5." PO Resp. 31 (citing Ex. 2006 ¶ 76). Patent Owner argues that "[m]ating these alleged brackets with the side of the backlight unit, ensures that they do not impede airflow behind Kim's backlight

unit 130." *Id*. (citing Ex. 2006 ¶ 77). Patent Owner also argues that Kim "does not disclose any serviceability or structural strength concerns relating to its design," and "a POSITA would understand that its Kim's design to be much more convenient and serviceable than that of Tachikawa." *Id*. (citing Ex. 2006 ¶¶ 78–79). Patent Owner further argues that "Tachikawa provides no teachings regarding improved serviceability." *Id*. at 32. Increased serviceability, however, is an example of an implicit motivation to combine that exists "even absent any hint of suggestion in the references themselves." *DyStar*, 464 F.3d at 1368.

After considering the complete trial record, we are persuaded that Petitioner establishes that the combination of Kim, Hong, and Tachikawa teaches all of the elements of claim 5. Kim teaches that shield cover 140 (the recited "constricted convection plate") "is supported by at least one of the backlight unit 130 and the casing 110, with a space formed between the shield cover 140 and the backlight unit 130." Ex. 1005, 4:52–55. Mr. Smith-Gillespie credibly testifies that Kim's approach of attaching shield cover 140 to backlight unit 130 using a pair of brackets "may be less advantageous when it comes to accessing components, such as circuit board 133 and the rear side of backlight unit 130, from the rear of the assembly" because "Kim's brackets are obscured by casing 111 when assembled in the case." Ex. 1002 ¶ 156. Mr. Smith-Gillespie further credibly testifies that "as LCD panel sizes grow, additional structure is required beyond that of typically molded plastic housing or thin sheet metal case," and "a POSITA would have been inclined to look for alternate bracket options to improve the connection between Kim's shield cover 140 and

backlight 130." *Id*. Mr. Smith-Gillespie also notes that "Kim's stand 105 is only connected to the rear casing 115." *Id*.

Tachikawa teaches that "PDP 10 is housed in the cabinet 30 in a state of being supported by two brackets 20 on the rear side," with attachments 50 "fixed at four positions on the upper, lower, left, and right sides of the PDP 10, and each set of the attachment 50 divided into two sets of left and right is fixed to each of the one brackets 20," which are in turn connected to a stand that supports "substantially the entire plasma television 100 at a predetermined height." Ex. 1026 ¶ 19. Tachikawa further teaches that "front cabinet 30 is also fixed to the bracket 20," and bracket 20 is designed such that when it is connected to PDP 10, the upper and lower ends 22a and 22b of the bracket extend outward beyond the width of the PDP 10 in the vertical direction, and the extended upper and lower ends 22a and 22b and the upper and lower sides 30 and 31 of the front cabinet are respectively fixed." *Id*. ¶ 20. Tachikawa also teaches that "the rear cabinet 40 covering the rear side of the plasma television 100 is also fixed to the bracket 20." *Id*.

We credit Mr. Smith-Gillespie's testimony that:

> A POSITA would therefore understand from the above that the use of Tachikawa's brackets 20, along with attachments 50, allows the removal of rear cabinet 40 covering, which is positioned against the back surface of PDP 10, with minimal effort since the rear cabinet 40 would be snapped on the PDP 10, much like front cabinet 30. The bracket and attachment configuration proposed by Tachikawa would be applicable to Kim to take advantage of the benefits provided therefrom. For example, a POSITA would have envisioned, based on the teachings from Tachikawa, that the rear side surface of Kim's backlight unit 130 would be fitted with brackets via a set of attachments (e.g., like PDP 10 is fitted with brackets 20 via attachments 50 in Tachikawa) so that shield cover 140 can be

> attached on the extended upper and lower ends (22a and 22b) of the brackets.

Ex. 1002 ¶ 161. We agree with Petitioner that "[t]his adaptation would amount to the use of a known technique to improve similar devices in the same way and would produce predictable results." Pet. 43 (citing Ex. 1002 ¶ 162).

Other than the arguments discussed above, Patent Owner does not dispute Petitioner's evidence that the combination of Kim, Hong, and Tachikawa teaches all of the limitations of claim 5. *See* PO Resp. Having reviewed the parties' arguments and evidence, and for the reasons set forth above with respect to claim 4 and in the Petition, we are persuaded that the combination of Kim, Hong, and Tachikawa teaches all of the elements of claim 5. Section II.F.2, *supra*; Pet. 39–41; Ex. 1002 ¶¶ 150–154. We also determine, for the reasons set forth in the Petition, that a POSITA would have been motivated to combine the teachings of Kim, Hong, and Tachikawa as proposed with a reasonable expectation of success. Pet. 42–43; Ex. 1002 ¶¶ 155–163.

H. Asserted Obviousness over Kim and Tachikawa

Petitioner contends that claims 1–3 would have been obvious over the combined teachings of Kim and Tachikawa. Pet. 48–50; Ex. 1002 ¶¶ 174–188.

1. Analysis of Claim 1

Petitioner contends that the combination of Kim and Tachikawa teaches all of the elements of independent claim 1. Pet. 48–49. Relying on arguments made with respect to the similar limitation in claim 4, Petitioner contends that Kim's shield cover 140 is the "constricted convection plate

placed posterior to the posterior display surface" recited in claim 1. *Id*. (citing Pet. 33–34). Petitioner also contends that shield cover 140 covers the majority of the posterior display surface. *Id*. at 49 (citing Ex. 1005, Figs. 2, 5 (annotated)).

With respect to the "at least one bracket which connects the posterior display surface with the constricted convection plate" limitation of claim 1, Petitioner points us to the arguments made in reference to claim 5, discussed above. Pet. 49 (citing Ex. 1002 ¶ 182; Pet. 39–41). Petitioner also argues that Kim teaches the claimed "fan placed to draw ambient air between the constricted convection plate and the rear posterior" for the reasons set forth above with respect to the similar limitation in claim 4. *Id*. (citing Ex. 1002 ¶¶ 183–184; Pet. 34–36). Finally, Petitioner contends that "[a] POSITA would have been motivated to combine Kim with Tachikawa for the same reasons as discussed above with respect to the combination of Kim, Hong, and Tachikawa." *Id*. at 48 (citing Pet. 42–43).

Relying on the arguments it made with respect to claim 4 above, Patent Owner argues that Kim does not disclose "a constricted convection plate" as required in claim 1. PO Resp. 34. Patent Owner also argues, for the reasons set forth with respect to claim 5 above, that "a POSITA would not have been motivated to modify Kim to use Tachikawa's brackets." *Id*.

Having reviewed the parties' arguments and evidence, and for the reasons set forth above with respect to claim 4 and in the Petition, we are persuaded that the combination of Kim and Tachikawa teaches all of the elements of claim 1. Section II.F.2.a, *supra*; Pet. 48–49; Ex. 1002 ¶¶ 174–184. We also determine, for the reasons set forth with respect to claim 5 above and in the Petition, that a POSITA would have been motivated to

combine the teachings of Kim, Hong, and Tachikawa as proposed with a reasonable expectation of success. Section II.G.1., *supra*; Pet. 42–43.

2. Analysis of Claims 2 and 3

Claim 2 depends from claim 1 and further requires "the posterior display surface comprises the rear surface of a backlight assembly." Ex. 1001, 10:3–5. Claim 3 also depends from claim 1 and further requires "the constricted convection plate is substantially parallel to the posterior display surface." *Id*. at 10:6–8. Petitioner contends that Kim in combination with Tachikawa renders claims 2 and 3 obvious for the reasons explained above with respect to the similar limitations in claim 4. Pet. 50 (citing Ex. 1002 ¶¶ 185–187).

Having reviewed the parties' arguments and evidence, and for the reasons set forth above with respect to claims 1 and 4 and in the Petition, we find that the combination of Kim and Tachikawa teaches all of the elements of claims 2 and 3. Sections II.F.2 and II.H.1, *supra*; Pet. 50; Ex. 1002 ¶¶ 185–187.

I. Asserted Obviousness over Kim, Hong, and Takahashi

Petitioner contends that claim 8 would have been obvious over the combined teachings of Kim, Hong, and Takahashi. Pet. 43–48. Because we find that Na teaches all of the limitations recited in claim 8, we decline to address this ground.

J. Asserted Obviousness over Kimura

Petitioner contends that claims 9, 12, 13, and 16 would have been obvious over Kimura. Pet. 71–81. Because we find that Na teaches all of the limitations recited in claims 9 and 16, and that the combination of Na

and Kim teaches all of the limitations recited in claims 12 and 13, we decline to address this ground.

K. Asserted Obviousness over Kimura and Kochiyama

Petitioner contends that claims 1–3 and 11 would have been obvious over the combined teachings of Kimura and Kochiyama. Pet. 81–86. Because we find the combination of Kim and Tachikawa teaches all of the limitations recited in claims 1–3, and the combination of Na and Tachikawa teaches all of the limitations recited in claim 11, we decline to address this ground.

L. Asserted Obviousness over Kimura and Hong

Petitioner contends that claims 4 and 7 would have been obvious over the combined teachings of Kimura and Hong. Pet. 87–90. Because we determine that Na, and the combination of Kim and Hong, teaches all of the limitations recited in claims 4 and 7, we decline to address this ground.

M. Asserted Obviousness over Kimura, Hong, and Kochiyama

Petitioner contends that claim 5 would have been obvious over the combined teachings of Kimura, Hong, and Kochiyama. Pet. 90. Because we find that the combination of Kim, Hong, and Tachikawa teaches all of the limitations recited in claim 5, we decline to address this ground.

N. Asserted Obviousness over Cho

Petitioner contends that claims 4, 5, and 9–11 would have been obvious over Cho. Pet. 90–105. Because we determine that (1) Na teaches all of the limitations of claims 4, 9, and 10; (2) the combination of Na and Tachikawa teaches all of the limitations recited in claim 11; (3) the combination of Kim and Hong teaches all of the limitations recited in claim 4; and (4) Kim,

Hong, and Tachikawa teach all of the limitations recited in claim 5, we decline to address this ground.

O. Mr. Smith-Gillespie's Testimony

Patent Owner argues that Mr. Smith-Gillespie's testimony is entitled to little weight given that it "largely parrots the Petition without any elaboration or supporting evidence." PO Resp. 62 (citing *Xerox Corp. v. Bytemark, Inc.*, IPR2022-00624, Paper 9 at 15[8] (PTAB Aug. 24, 2022) (precedential)). In *Xerox*, the Board gave a declarant's testimony little weight where it merely repeated a petitioner's conclusory assertions and it did not include any technical reasoning or underlying factual support. *Xerox*, Paper 9 at 15. In conformity with *Xerox*, we accorded appropriate weight to the declarants' testimony in our analysis based on, *inter alia*, whether such testimony is supported by underlying evidence. We decline to discount Mr. Smith-Gillespie's testimony based solely on similarities with the Petition.

P. Objective Indicia of Nonobviousness

As part of our obviousness analysis, we also consider whether objective indicia of nonobviousness (i.e., secondary considerations) may lead to a conclusion that the challenged claims would not have been obvious. *See, e.g.*, *Stratoflex, Inc. v. Aeroquip Corp.*, 713 F.2d 1530, 1538–39 (Fed. Cir. 1983) (instructing that evidence of secondary considerations, when present, must always be considered in determining obviousness). Objective evidence of nonobviousness may include evidence of commercial success, licensing, copying, praise by others, long felt but unresolved need, and

[8] Patent Owner mistakenly cites to page 18, but the context makes clear that Patent Owner intended to cite page 15.

failure or skepticism of others. *Graham*, 383 U.S. at 17–18. But secondary considerations are only a part of the "totality of the evidence"; its mere existence does not control the conclusion of obviousness. *See Richardson Vicks Inc. v. Upjohn Co.*, 122 F.3d 1476, 1483 (Fed. Cir. 1997). Objective evidence of nonobviousness "may often be the most probative and cogent evidence in the record" and "may often establish that an invention appearing to have been obvious in light of the prior art was not." *Transocean Offshore Deepwater Drilling, Inc. v. Maersk Drilling USA, Inc.*, 699 F.3d 1340, 1349 (Fed. Cir. 2012).

Objective evidence of nonobviousness "is only relevant to the obviousness inquiry 'if there is a nexus between the claimed invention and the [objective indicia of nonobviousness].'" *In re Affinity Labs of Tex., LLC*, 856 F.3d 883, 901 (Fed. Cir. 2017) (quoting *Ormco Corp. v. Align Tech., Inc.*, 463 F.3d 1299, 1312 (2006)). A "nexus" is a legally and factually sufficient connection between the objective evidence and the claimed invention such that the objective evidence should be considered in the determination of obviousness. *Henny Penny Corp. v. Frymaster LLC*, 938 F.3d 1324, 1332 (Fed. Cir. 2019); *see In re Paulsen*, 30 F.3d 1475, 1482 (Fed. Cir. 1994). A presumption of nexus arises where "the patentee shows that the asserted objective evidence is tied to a specific product and that product 'embodies the claimed features, and is coextensive with them.'" *Fox Factory, Inc. v. SRAM, LLC*, 944 F.3d 1366, 1373 (Fed. Cir. 2019) (quoting *Polaris Indus., Inc. v. Arctic Cat, Inc.*, 882 F.3d 1056, 1072 (Fed. Cir. 2018) (quoting *Brown & Williamson Tobacco Corp. v. Philip Morris Inc.*, 229 F.3d 1120, 1130 (Fed. Cir. 2000))); *see also Teva Pharms. USA, Inc. v. Sandoz, Inc.*, 723 F.3d 1363, 1372 (Fed. Cir. 2013) (explaining that a

"presumption of a nexus" exists where a product is "coextensive" with a patent claim). If, however, the patented invention is only a component of the commercial embodiment, the patentee is not entitled to a presumption of nexus. *Fox Factory*, 944 F.3d at 1374. In addition, "[a] patent claim is not coextensive with a product that includes a 'critical' unclaimed feature that is claimed by a different patent and that materially impacts the product's functionality." *Id*. at 1375. But "[a] finding that a presumption of nexus is inappropriate does not end the inquiry into secondary considerations;" rather, "the patent owner is still afforded an opportunity to prove nexus by showing that the evidence of secondary considerations is 'the direct result of the unique characteristics of the claimed invention.'" *Id*. at 1374 (quoting *In re Huang*, 100 F.3d 125, 140 (Fed. Cir. 1996)). Patent Owner bears the burden of establishing that a nexus exists between the evidence of secondary considerations and the patented invention. *Id*. at 1373.

1. Failure of Others

Patent Owner argues that Samsung "failed to identify an effective solution" to the "enormous thermal challenge" for outdoor displays. PO Resp. 63. Specifically, Patent Owner argues that Samsung began outdoor LCD display development at least by 2005, but was not able to introduce an actual display product to the market by the priority date of the '322 patent, March 3, 2008. *Id*. at 64 (citing Ex. 2029, 45:22–46:15; Exs. 2033–2037 (Samsung patent applications)). Patent Owner cites the testimony of former Samsung engineer Sung Ki Kim regarding Samsung's development activities for the proposition that Samsung had a "***decade of failures*** between 2005 and 2015" before launching its OHF product line. *Id*. at 64–65 (citing Ex. 2029, 46:16–47:22, 49:9–17, 51:1–9, 53:1–4).

Petitioner argues that Samsung did not fail. Pet. Reply 22. According to Petitioner, "Sung Ki Kim's testimony that Samsung started researching outdoor displays around 2005 but did not launch a product until 2010–2012 does not establish 'a decade of failures.'" *Id*. (citing PO Resp. 64–65). Petitioner argues that "[t]here is no evidence that Samsung worked on the display continuously during that time or that it had any difficulties." *Id.* Petitioner also disputes Patent Owner's showing regarding "failure of others" because Patent Owner did not establish that "these prior attempts failed because the devices lacked the claimed features." *Id*. (quoting *Ormco*, 463 F.3d at 1313).

The record evidence of Samsung's alleged failure includes certain Samsung patents and patent applications arising from before the time of the '322 patent. *See* Exs. 2033–2037. Two of them are the Na and Kim references that Petitioner asserts in this proceeding. *Compare* Ex. 1010 (Na), *with* Ex. 2036, *and* Ex. 1005 (Kim), *with* Ex. 2037. Given our findings above of persuasive evidence that Na, either alone or in combination with Kim or other references, and Kim in combination with other references, teaches the limitations of the challenged claims (*see, e.g.*, Section II.C–H, *supra*), Petitioner's development efforts could not have failed completely as suggested by Patent Owner. We also note that Samsung marketed an outdoor display product in the 2010–2012 time frame, which also undermines at least part of Patent Owner's "decade of failures" narrative. Ex. 2029, 46:12–47:22. Finally, Patent Owner makes no attempt to show how Samsung's development efforts failed because of a lack of claimed features. *See Ormco*, 463 F.3d at 1313. Indeed, Patent Owner characterizes the solution to the alleged failures as "effective cooling" (PO

Sur-reply 25), which is unmoored from the recitations of the challenged claims.

Because the evidence of record supports neither that Samsung was unsuccessful nor that Samsung's development efforts failed due to a lack of claimed features, we accord this evidence little to no weight.

2. Satisfaction of a Long-Felt Need

Patent Owner notes that, in the early 2000s, large LCD display screens "faced new thermal challenges, particularly when used in an outdoor environment." PO Resp. 63 (citing Exs. 2025, 2026, 2038, 2047). Patent Owner cites a 2015 Samsung white paper as stating how companies had "wanted their messages outdoors" but "were challenged by a variety of issues during the early years." *Id*. (quoting Ex. 2025, 3, 6). Patent Owner also notes how the same Samsung white paper states that "[t]he biggest obstacle was heat—from inside and from the sun. Direct sunlight and its amplified heat could alter the properties of LCD crystals—the display layer of screens—and discolor or cause black blotches." *Id*. (quoting Ex. 2025, 3). The same Samsung white paper also states that outdoor environments posed "enormous engineering challenges." *Id*. (quoting Ex. 2025, 3) (emphasis omitted). Patent Owner contends that "[y]ears of research efforts were undertaken by Samsung and others in the electronic display industry to address the enormous thermal challenge." *Id*. Patent Owner further contends that "no one . . . was successful" in developing a cooling solution "until Mr. Dunn[9] conceived of his invention." *Id*. at 75.

---

[9] William Dunn is the named inventor of the '322 patent. Ex. 1001, code (72).

Petitioner disputes Patent Owner's assertion that there was a need for outdoor displays with cooling technology, because "the claims are not so limited." Pet. Reply 21 (citing *ABT Sys., LLC v. Emerson Elec. Co.*, 797 F.3d 1350, 1362 (Fed. Cir. 2015); PO Resp. 63). Petitioner also argues that Patent Owner does not show how the challenged claims satisfy any alleged need. *Id*.

In its Sur-reply, Patent Owner argues that Petitioner "confuses the *long-felt need* with the *claimed invention* that meets the need." PO Sur-reply 25 (citing *Volvo Penta of the Americas, LLC v. Brunswick Corp.*, 81 F.4th 1202 (Fed. Cir. 2023)). Patent Owner also disputes Petitioner's assertion based on *ABT Systems* because "unlike here, the prior art taught an HVAC system with periodic fans that met the alleged unmet need." *Id*. at 26 n.4 (citing *ABT Systems*, 797 F.3d at 1362).

Patent Owner broadly defines the alleged long-felt need as a need for "displays with effective cooling to enable use outdoors." PO Sur-reply 25. Even if we were to assume that a long-felt need for effective outdoor cooling existed in the art,[10] and regardless of whether the challenged claims are or are not limited to outdoor cooling, we agree with Petitioner (Pet. Reply 21)

---

[10] We find Patent Owner's articulation of the alleged long-felt need to be vague and subjective. In addition, we note that Patent Owner acknowledges (PO Resp. 64) prior art from Samsung showing it was known to cool displays for outdoor use. *See, e.g.*, Ex. 2033 ¶ 3 (Samsung patent application directed to "a display device that is usable outdoors and prevents . . . a rise in temperature of a display part"); Ex. 2035, 1:18–20, 2:32–47 (Samsung patent directed to "a liquid crystal display device to be installed outdoors" that includes a heat radiating member and fans). This undermines Patent Owner's articulation of the alleged need. Notwithstanding, we dispose of Patent Owner's arguments based on the lack of nexus evidence, as discussed below.

that Patent Owner fails to adduce evidence showing how the claimed invention satisfied the alleged need for effective outdoor cooling. *See Sjolund v. Musland*, 847 F.2d 1573, 1582 (Fed. Cir. 1988) (holding that a proponent of objective evidence of long-felt need must show that "the *claimed invention* satisfied a long felt need"). Patent Owner states in conclusory fashion that "[d]espite the demand for outdoor displays, no one (including Samsung, despite having attempted to develop outdoor displays at least by 2005) was successful until Mr. Dunn conceived of his invention." PO Resp. 75. Patent Owner cites no evidence for this proposition, so Patent Owner's assertions regarding Mr. Dunn's invention satisfying the alleged need are based on unsupported attorney argument. Accordingly, "we conclude that the nexus between the claimed invention and the purported long-felt, unmet need is too attenuated to provide a persuasive rationale for nonobviousness." *In re Karpf*, 758 F. App'x 960, 965 (Fed. Cir. 2019).

For these reasons, we accord Patent Owner's evidence of satisfying a long-felt need little to no weight.

3. Copying

As further objective evidence that the challenged claims are nonobvious, Patent Owner contends that Samsung's 46- and 55-inch OHF products copied the system of claims 9, 12, 13, and 16. PO Resp. 65–72; PO Sur-reply 26. Patent Owner cites two documents and testimony from Samsung employees regarding Samsung's teardown and analysis of large-format and mid-sized versions of [redacted] products. PO Resp. 71–72 (citing Ex. 2029, 139:7–16; Ex. 2031, 77:13–81:16; Exs. 2042, 2043). Patent Owner also puts forth annotated pictures of Patent Owner's teardown of a Samsung OHF product that allegedly show how "the cooling system for the

LCD panel in the Samsung OHF product utilizes a constricted convection plate covering a majority of the posterior display surface and meets all elements of claims 9, 12, 13, and 16 of the '322 patent." *Id*. at 66–68 (citing Ex. 2019, 265:13–24; Ex. 2020). Patent Owner additionally puts forth evidence from a marketing presentation to [redacted], a Samsung user manual, and a Samsung installation guide to support its contentions about how the OH product allegedly practices claims 9, 12, 13, and 16. *Id*. at 65–72 (citing Ex. 2021, 120; Ex. 2038, 11–22; Ex. 2053). Patent Owner contends this is probative objective evidence of copying because copying merely "requires duplication of features of the patentee's work based on access to that work." PO Sur-reply 25–26 (quoting *Institut Pasteur & Universite Pierre Et Marie Curie v. Focarino*, 738 F.3d 1337, 1347–48 (Fed. Cir. 2013)).

Petitioner counters that Samsung had already fully designed the cooling scheme for its OH products by the time of Samsung's teardown and analysis of [redacted] products. Pet. Reply 22 (citing Ex. 1051, 612:11–13, 613:14–614:18; Ex. 2040; Ex. 2042, 65). Petitioner also argues that Patent Owner has not identified any features of [redacted] products that Samsung allegedly copied. *Id*. (citing *Iron Grip Barbell Co., Inc. v. USA Sports, Inc.*, 392 F.3d 1317, 1325 (Fed. Cir. 2004)).

We agree with Petitioner that the evidence of record includes a comparison chart between Samsung's products and [redacted] products—and in particular their mid-size 55-inch products—which suggests that Samsung's OH products were already designed at the time of Samsung's competitive teardown and analysis of [redacted] products. *See* Ex. 2042, 65; *cf.* Ex. 1051, 613:14–25 (Mr. Lee testifying that the same comparison chart indicates that

the large-format Samsung product has been completed due to its inclusion in this chart). Thus, the evidence of record does not support that Samsung copied the torn-down products when making its OH products.

Further, even if we were to assume that Samsung had access to [redacted] products prior to making its own products, the record does not include any evidence or analysis from Patent Owner showing any feature of [redacted] products that Samsung duplicated. Nor has Patent Owner put forth evidence of substantial similarity between Samsung's products and [redacted] products. *See Medtronic, Inc. v. Teleflex Innovations S.a.r.l.*, 70 F.4th 1331, 1340 (Fed. Cir. 2023) ("Evidence of access and substantial similarity *is* evidence of copying."). "Copying requires *duplication of features of the patentee's work* based on access to that work, lest all infringement be mistakenly treated as copying." *Institut Pasteur*, 738 F.3d at 1347–48 (emphasis added). At best, Patent Owner has put forth the broad contours of an infringement analysis, which is insufficient to show duplication. *See* PO Resp. 67 ("[T]he cooling system for the LCD panel in the Samsung OHF product utilizes a constricted convection plate covering a majority of the posterior display surface and meets all the elements of claims 9, 12, 13, and 16 of the '322 patent."), 70 ("Samsung's 46-inch and 55-inch OHF products practice claims 9, 12, 13, and 16 of the '322 patent, [and] are coextensive with those claims."), 71 ("Thereafter, Samsung released its new OHF products which infringe the challenged claims and can function outside in full sunlight because of their cooling system.").

For these reasons, we accord Patent Owner's evidence of copying little to no weight.

4. Commercial Success

Patent Owner contends that "Samsung's infringing OHF products (and subsequent OHA and OHB products) achieved the commercial success its earlier efforts could not." PO Resp. 72. In particular, Patent Owner contrasts Samsung's predecessor OHD products' [redacted] in U.S. sales over several years with the over [redacted] in U.S. sales achieved by Samsung's 55-inch OHF product in a single year.[11] *Id*. at 72–73 (citing Ex. 2040). Based on the same analysis discussed above relative to Samsung's alleged copying, Patent Owner contends that "Samsung's 46-inch and 55-inch OHF products practice claims 9, 12, 13, and 16 of the '322 patent, are coextensive with those claims, and there is a nexus between the secondary considerations evidence and [Patent Owner]'s claimed invention." *Id*. at 70.

Although Petitioner does not dispute that Samsung's products have been a commercial success, Petitioner argues that Patent Owner has not attempted to establish a nexus between Samsung's products and the challenged claims. Pet. Reply 23. Petitioner also argues that Patent Owner is not entitled to a presumption of nexus based on coextensiveness. *Id*. at 23–24 (citing *Fox Factory*, 944 F.3d at 1373). Petitioner characterizes Patent Owner's arguments about coextensiveness as being conclusory,

---

[11] Patent Owner also puts forth market share evidence (PO Resp. 73 (citing Ex. 2041, 29–30)), but Petitioner disputes the relevance of this evidence because it pertains to products outside the scope of Patent Owner's commercial success assertions (i.e., Samsung's 75-inch products). Pet. Reply 24. Although we agree with Petitioner that Patent Owner has not cited the commercial success of any 75-inch products, we need not resolve this issue given our finding below that Patent Owner fails to adduce evidence showing coextensiveness with any product.

particularly because neither Patent Owner nor Mr. Gershowitz has analyzed the significance of unclaimed features in Samsung's products. *Id*. (citing *Fox Factory*, 944 F.3d at 1374–75). And Petitioner cites numerous such unclaimed features in Samsung's products, including "Magic glass," "Slim Design," "IP 56" certification, "High Contrast Ratio," "Brightness Greater than 3,500 nits," and "Remote Management." *Id*. at 24 (citing Ex. 1052; Ex. 2038, 7). Thus, Petitioner contends that "these products are not coextensive with the Challenged Claims" and Patent Owner "has not established a nexus between Samsung's sales and the Challenged Claims." *Id*. (citing *Ormco*, 463 F.3d at 1312).

In its Sur-reply, Patent Owner criticizes Petitioner's alleged unclaimed features in its products as relating to "its *current* (i.e., 2023) OHA, OHB series products." PO Sur-reply 26. In contrast, Patent Owner contends that "the relevant point in time for assessing the claimed cooling system's impact on sales was the introduction of the OHF series," at which time Samsung's "OH-series sales immediately increased nearly two orders of magnitude." *Id*. (citing PO Resp. 72–73). Patent Owner also contends that "but for the cooling system of the claimed invention the continued success of the OHA and OHB products would have been impossible because the products would not have been operable outdoors." *Id*.

We agree with Petitioner that Patent Owner has not attempted to prove a direct nexus between the alleged commercial success and the challenged claims. As such, Patent Owner necessarily must rely on a presumption of nexus, which "applies for objective indicia when the patentee shows that the asserted objective evidence is tied to a specific product and that product 'embodies the claimed features, and is coextensive

with them.'" *Polaris Indus., Inc. v. Arctic Cat, Inc.*, 882 F.3d 1056, 1072 (Fed. Cir. 2018) (quoting *Brown & Williamson Tobacco Corp. v. Philip Morris Inc.*, 229 F.3d 1120, 1130 (Fed. Cir. 2000)). Yet Patent Owner includes no analysis or evidence to support its assertion that Samsung's 46-inch and 55-inch OHF products are coextensive with claims 9, 12, 13, and 16. PO Resp. 70. Instead, Patent Owner relies on broad-brush assertions that Samsung's products practice claims 9, 12, 13, and 16. *See id*. at 65–72. Our reviewing court has rejected such "attempt[s] to reduce the coextensiveness requirement to an inquiry into whether the patent claims broadly cover the product that is the subject of the evidence of secondary considerations." *Fox Factory*, 944 F.3d at 1377.

Moreover, Patent Owner does not put forth any evidence or analysis showing that claimed features of Samsung's products, rather than unclaimed features, led to Samsung's commercial success. *See Ormco*, 463 F.3d at 1312 ("[I]f the commercial success is due to an unclaimed feature of the device, the commercial success is irrelevant."). On the other hand, Petitioner put forth at least some evidence of unclaimed features that Samsung touted to one potential customer and in a brochure. *See, e.g.*, Ex. 1052, 2–4; Ex. 2038, 7. Although Patent Owner asks us to discount this evidence because it only relates to current-day OHA and OHB products rather than OHF products (PO Sur-reply 26), we decline to do so. Patent Owner cites the OHA and OHB products as part of its commercial success assertions. PO Resp. 72 ("Samsung's infringing OHF products (*and subsequent OHA and OHB products*) achieved the commercial success" (emphasis added)). In addition, one of the two exhibits cited by Petitioner is Exhibit 2038, which Patent Owner itself characterizes as "a March 2017

presentation pitching its *OHF product* to its customer [redacted]." *Id.* at 65 (emphasis added). Thus, Petitioner's evidence suggests the sort of unclaimed features that may have driven some of the commercial success cited by Patent Owner. Nevertheless, in the absence of any record evidence of coextensiveness, we cannot rule in or out any particular factor as driving commercial success.

Based on all of these considerations, we find that the evidence of record does not support coextensiveness between the challenged claims and any of Samsung's commercially successful products. Thus, Patent Owner is not entitled to a presumption of nexus. Accordingly, we accord Patent Owner's evidence of commercial success little to no weight.

5. Industry Praise

As evidence of industry praise for the '322 patent, Patent Owner cites an email from Samsung employee Romulus Stoian to Mr. Dunn, the inventor of the '322 patent, in which Mr. Stoian called what Mr. Dunn had done at MRI "impressive and unique." PO Resp. 74 (citing Ex. 2001). Patent Owner also cites Mr. Stoian's statement that MRI had entered "a virgin space." *Id.* Patent Owner further cites testimony in the ITC from John Palmer, "a Samsung customer and integrator of Samsung OHF displays for end users," who "testified that Samsung's products were requested by customers (and believed by Palmer to be superior) because of their built-in cooling systems." *Id.* at 75 (citing Ex. 2032, 118:6–119:8).

Petitioner calls Mr. Stoain's email "generic" and argues that it "does not identify any specific technical feature of MRI's products, let alone a specific product that embodies, and is coextensive with, the elements of the Challenged Claims." Pet. Reply 25.

We agree with Petitioner that Patent Owner has not established a nexus between its proffered evidence of industry praise and the challenged claims. For example, while Mr. Stoian's email is certainly laudatory of Mr. Dunn and MRI, the passages cited by Patent Owner are tied to MRI's "*new business model* based on turnkey solutions for DOOH [Digital Out-Of-Home displays]." Ex. 2001 (emphasis added). Further, the email does not mention any features of the challenged claims. *See id*. And nothing in the record ties Mr. Stoian's (and by extension, Samsung's) laudatory statements to the challenged claims. Similarly, Mr. Palmer praised Samsung's displays, and insinuated that Samsung displays function well in hot and cold conditions, but none of his ITC testimony is tied to any particular feature of the challenged claims. *See* Ex. 2032, 118:6–119:8. In the absence of any nexus evidence tying the asserted industry praise to the challenged claims, we accord Patent Owner's proffered evidence of praise little to no weight.

6. Licensing

Patent Owner argues that third parties have "recognized MRI's innovations by licensing the '322 Patent and paying royalties for use of the claimed inventions." PO Resp. 74. In particular, Patent Owner cites licensing and joint venture agreements between MRI and "Samsung's primary competitor LG." *Id*. (citing Exs. 2049, 2050). Patent Owner also cites other licenses with Megatech and [redacted] *Id*. (citing Exs. 2051, 2052).

Petitioner argues that Patent Owner does not attempt to establish a nexus between the licensing activity and the '322 patent. Pet. Reply 25. According to Petitioner, "MRI's licenses [redacted] or list numerous other intellectual property rights [redacted]" *Id*. (citing Exs. 2049, 2051, 2052; *Shoes by Firebug*

LLC v. Stride Rite Children's Grp., LLC, 962 F.3d 1362, 1372–73 (Fed. Cir. 2020)).

Of the agreements cited by Patent Owner, the [redacted] *See* Ex. 2052, 1–3. The Megatech license [redacted] *See* Ex. 2051, 10 (identifying Application No. 61/033,064); Ex. 1001, code (60). MRI's license and joint venture agreements with LG appears to be [redacted] *See, e.g.*, Ex. 2049, 1–2 [redacted] Because the agreements encompass intellectual property rights beyond the '322 patent, the agreements on their face do not establish a nexus to the challenged claims. *See Shoes by Firebug*, 962 F.3d at 1372.

Patent Owner puts forth no other evidence to support a finding of nexus. In the absence of such nexus evidence, we accord Patent Owner's evidence of licensing little or no weight.

Q. Conclusion: Obviousness

Based upon our consideration of the entire record, and for the reasons set forth above, we determine that Petitioner shows by a preponderance of the evidence that (1) Na teaches all of the limitations of claims 4, 8–10, and 16; (2) the combination of Na and Kim teaches all of the limitations of

claims 7, 12, and 13, and Petitioner puts forth a persuasive rationale for combining Kim with Na; (3) the combination of Na and Tachikawa teaches all of the limitations of claim 11, and Petitioner put forth a persuasive rationale for combining Na and Tachikawa; (4) the combination of Kim and Hong teaches all of the limitations of claim 4 and 7, and Petitioner puts forth a persuasive rationale for combining Kim and Hong; (5) the combination of Kim, Hong, and Tachikawa teaches all of the limitations of claim 5, and Petitioner puts forth a persuasive rationale for combining Kim, Hong, and Tachikawa; and (6) the combination of Kim and Tachikawa teaches all of the limitations of claims 1–3, and Petitioner puts forth a persuasive rationale for combining Kim and Tachikawa. We also determine that Petitioner's evidence of unpatentability outweighs the objective indicia of nonobviousness provided by Patent Owner. Accordingly, we determine that Petitioner establishes by a preponderance of the evidence that claims 1–5, 7–13, and 16 of the '322 patent would have been obvious.

R. Petitioner's Motion to Strike

Petitioner moves to strike Exhibits 2055 and 2056 as being improper new evidence filed by Patent Owner with its Sur-reply in contravention of 37 C.F.R. § 42.23(b). Paper 47, 1–5. We do not rely on either of these exhibits in rendering this Decision. Accordingly, we *dismiss as moot* Petitioner's Motion to Strike.

III. CONCLUSION[12]

After reviewing the record and weighing the evidence offered by both parties, we determine that Petitioner shows, by a preponderance of the

[12] Should Patent Owner wish to pursue amendment of the challenged claims in a reissue or reexamination proceeding subsequent to the issuance of this

evidence, that (1) claims 4, 8–10, and 16 would have been obvious over the teachings of Na; (2) claims 7, 12, and 13 would have been obvious over the combined teachings of Na and Kim; (3) claim 11 would have been obvious over the combined teachings of Na and Tachikawa; (4) claims 4 and 7 would have been obvious over the combined teachings of Kim and Hong; (5) claim 5 would have been obvious over the combined teachings of Kim, Hong, and Tachikawa; and (6) claims 1–3 would have been obvious over the combined teachings of Kim and Tachikawa. We also *dismiss as moot* Petitioner's Motion to Strike.

IV. ORDER

In consideration of the foregoing, it is hereby:

ORDERED that Petitioner has shown by a preponderance of the evidence that claims 1–5, 7–13, and 16 of the '322 patent are unpatentable;

FURTHER ORDERED that Petitioner's Motion to Strike (Paper 47) is *dismissed as moot*; and

FURTHER ORDERED that, because this is a Final Written Decision, parties to the proceeding seeking judicial review of the Decision must comply with the notice and service requirements of 37 C.F.R. § 90.2.

---

decision, we draw Patent Owner's attention to the April 2019 *Notice Regarding Options for Amendments by Patent Owner Through Reissue or Reexamination During a Pending AIA Trial Proceeding*. *See* 84 Fed. Reg. 16,654 (Apr. 22, 2019). If Patent Owner chooses to file a reissue application or a request for reexamination of the challenged patent, we remind Patent Owner of its continuing obligation to notify the Board of any such related matters in updated mandatory notices. *See* 37 C.F.R. § 42.8(a)(3), (b)(2).

In summary:

Claims	35 U.S.C. §	Reference(s)/Basis	Claims Shown Unpatentable	Claims Not shown Unpatentable
4, 7	103	Kim, Hong	4, 7	
5	103	Kim, Hong, Tachikawa	5	
8	103	Kim, Hong, Takahashi[13]		
1–3	103	Kim, Tachikawa	1–3	
4, 8–10, 16	103	Na	4, 8–10, 16	
7, 12, 13	103	Na, Kim	7, 12, 13	
11	103	Na, Tachikawa	11	
9, 12, 13, 16	103	Kimura[14]		
1–3, 11	103	Kimura, Kochiyama[15]		
4, 7	103	Kimura, Hong[16]		
5	103	Kimura, Hong, Kochiyama[17]		

[13] We do not reach this ground because Petitioner shows that claim 8 would have been obvious over the teachings of Na.
[14] We do not reach this ground because Petitioner shows that claims 9 and 16 would have been obvious over the teachings of Na, and claims 12 and 13 would have been obvious over the combined teachings of Na and Kim.
[15] We do not reach this ground because Petitioner shows that claims 1–3 would have been obvious over the combined teachings of Kim and Tachikawa, and claim 11 would have been obvious over the combined teachings of Na and Tachikawa.
[16] We do not reach this ground because Petitioner shows that claims 4 and 7 would have been obvious over the teachings of Na and the combined teachings of Kim and Hong.
[17] We do not reach this ground because Petitioner shows that claim 5 would have been obvious over the combined teachings of Kim, Hong, and Tachikawa.

4, 5, 9–11	103	Cho[18]		
Overall Outcome			1–5, 7–13, 16	

[18] We do not reach this ground because Petitioner shows that claims 4, 9, and 10 would have been obvious over the teachings of Na, claim 11 would have been obvious over the combined teachings of Na and Tachikawa, claim 4 would have been obvious over the combined teachings of Kim and Hong, and claim 5 would have been obvious over the combined teachings of Kim, Hong, and Tachikawa.

FOR PETITIONER:

Sanjeet Dutta
Douglas J. Kline
Naomi Birbach
GOODWIN PROCTOR LLP
sdutta@goodwinlaw.com
dkline@goodwinlaw.com
nbirbach@goodwinlaw.com

FOR PATENT OWNER:

John C. Alemanni
Carl Sanders
Michael T. Morlock
Courtney Dabbiere
David A. Reed
KILPATRICK TOWNSEND & STOCKTON LLP
jalemanni@kilpatricktownsend.com
csanders@kilpatricktownsend.com
mmorlock@klilpatricktownsend.com
cdabbiere@kilpatricktownsend.com
dreed@klptricktownsend.com

CERTIFICATE OF SERVICE

Pursuant to 37 C.F.R. §§ 42.6(e) the undersigned hereby certifies that on July 3, 2024 **"PARTIES' JOINT PROPOSED REDACTIONS TO FINAL WRITTEN DECISION"** were served upon lead counsel for Patent Owner, pursuant to Patent Owner's agreement to accept such service by email as set forth in Patent Owner's Mandatory Notices.

John C. Alemanni – jalemanni@kilpatricktownsend.com

Carl Sanders – csanders@kilpatricktownsend.com

Michael T. Morlock – mmorlock@kilpatricktownsend.com

Courtney Dabbiere – cdabbiere@kilpatricktownsend.com

David A. Reed – dreed@kilpatricktownsend.com

Dated: July 3, 2024

/Sanjeet K. Dutta/

Sanjeet K. Dutta (Reg. No. 46,145)
GOODWIN PROCTER LLP
601 Marshall Street
Redwood City, California 94063
Email: sdutta@goodwinlaw.com
Tel.: +1 (650) 752-3100
Fax: +1 (650) 853-1038

Lead Counsel for Petitioner