(12) INTERNATIONAL APPLICATION PUBLISHED UNDER THE PATENT COOPERATION TREATY (PCT)

(19) World Intellectual Property Organization
International Bureau

(43) International Publication Date
18 October 2007 (18.10.2007)

PCT

(10) International Publication Number
WO 2007/116116 A1

(51) International Patent Classification:
G09F 9/313 (2006.01) *G09F 9/35* (2006.01)
G09F 9/33 (2006.01) *G09F 19/22* (2006.01)

(21) International Application Number:
PCT/FI2006/050145

(22) International Filing Date: 11 April 2006 (11.04.2006)

(25) Filing Language: Finnish

(26) Publication Language: English

(71) Applicant *(for all designated States except US)*: **SYMBICON OY** [FI/FI]; Viestitie 2, FI-87700 Kajaani (FI).

(72) Inventors; and
(75) Inventors/Applicants *(for US only)*: **KARPPANEN, Pasi** [FI/FI]; Kärpäntie 2 As 3, FI-87150 Kajaani (FI). **SUOMELA, Niko** [FI/FI]; Karoliinantie 2B A7, FI-87200 Kajaani (FI). **PYYKÖNEN, Markku** [FI/FI]; Karhunpolku 2 B, FI-88900 Kuhmo (FI).

(74) Agent: **BERGGREN OY AB**; Lentokatu 2, FI-90460 Oulunsalo (FI).

(81) Designated States *(unless otherwise indicated, for every kind of national protection available)*: AE, AG, AL, AM, AT, AU, AZ, BA, BB, BG, BR, BW, BY, BZ, CA, CH, CN, CO, CR, CU, CZ, DE, DK, DM, DZ, EC, EE, EG, ES, FI, GB, GD, GE, GH, GM, HR, HU, ID, IL, IN, IS, JP, KE, KG, KM, KN, KP, KR, KZ, LC, LK, LR, LS, LT, LU, LV, LY, MA, MD, MG, MK, MN, MW, MX, MZ, NA, NG, NI, NO, NZ, OM, PG, PH, PL, PT, RO, RU, SC, SD, SE, SG, SK, SL, SM, SY, TJ, TM, TN, TR, TT, TZ, UA, UG, US, UZ, VC, VN, YU, ZA, ZM, ZW.

(84) Designated States *(unless otherwise indicated, for every kind of regional protection available)*: ARIPO (BW, GH, GM, KE, LS, MW, MZ, NA, SD, SL, SZ, TZ, UG, ZM, ZW), Eurasian (AM, AZ, BY, KG, KZ, MD, RU, TJ, TM), European (AT, BE, BG, CH, CY, CZ, DE, DK, EE, ES, FI, FR, GB, GR, HU, IE, IS, IT, LT, LU, LV, MC, NL, PL, PT, RO, SE, SI, SK, TR), OAPI (BF, BJ, CF, CG, CI, CM, GA, GN, GQ, GW, ML, MR, NE, SN, TD, TG).

Published:
— *with international search report*

[Continued on next page]

(54) Title: ELECTRONIC INFORMATION BOARD

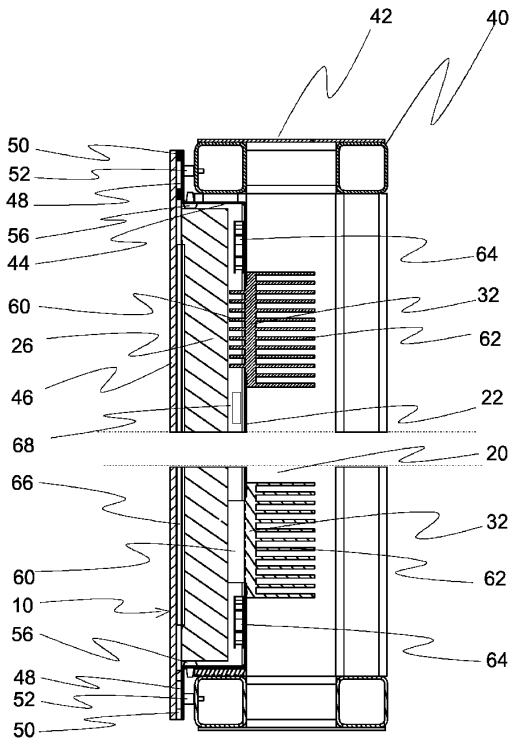

(57) Abstract: The invention relates to an electronic information board comprising a frame (40), a flat display element (26), such as a TFT LCD display or plasma display for presenting information, and electronic equipment for controlling the display element. The information board has a weatherproof display casing (10) for the display element and a weatherproof device casing (12) for the electronic equipment needed for controlling the display element. Between the casings, there is a common cooling space (20) for cooling the devices in the display casing and the device casing. The display casing and the device casing can be separated from each other for opening the cooling space for the duration of the updating and maintenance of the information board. The display casing has a back wall (22) bordered to the cooling space, having cooling elements for transferring heat from the display casing to the cooling space. Similarly, the device casing has a back cover bordered to the cooling space, having cooling elements for transferring heat from the device casing to the cooling space. On the opposite sides of the cooling space there are ventilator slots, and inside the cooling board there are cooling fans for enabling air flow through the cooling space. There may be vertical or horizontal flow ducts in the cooling space for controlling the air flow.

WO 2007/116116 A1

SEC et al. v. MRI
SEC Exhibit 1004.0001
IPR2023-00221

For two-letter codes and other abbreviations, refer to the "Guidance Notes on Codes and Abbreviations" appearing at the beginning of each regular issue of the PCT Gazette.

SEC et al. v. MRI
SEC Exhibit 1004.0002
IPR2023-00221

Electronic information board

The invention relates to an electronic information board comprising a frame, a flat display element for presenting information and electronic equipment for controlling the display element.

The conventional means used by advertisers to pass on information are illuminated advertisement boards containing a paper poster, which are updated by replacing the poster with a new one. Replacing the poster is laborious, and it may take place at intervals of several days or even weeks. New posters have to be printed, transported, replaced and finally disposed of. The changing of the posters thus causes unnecessary stress on the environment and costs. The problems entailed by paper posters are avoided by using electronic information boards instead of them.

The display of an electronic information board can be implemented by using any prior art display device technology. For the present, the most advantageous display technology for display devices of a few square metres and less is the TFT LCD technology, which provides the advantages of a large viewing angle, a short response time, good contrast and reliability of the display. In addition to TFT LCD displays, other electronic display solutions, such as plasma displays, can be used in information boards.

TFT LCD displays are used to some extent in the implementation of public electronic information boards. The problem is that when used in environments having high temperatures, the temperatures of the display devices easily rise too high. On the other hand, in cold environments there is the danger that the temperatures of the display devices fall too low. In both situations it is important that the temperatures at different points inside the display device can be kept as constant as possible. Then the display device operates in the widest possible range of operating temperatures, and local temperatures do not cause exceeding of the specifications given to the display element.

In the present devices, the warming of the display in cold conditions has often been solved by a transparent warming resistor fastened to the transparent window of the device. In this solution, the problem is the high price of components, because the manufacture of a transparent warming element requires special solutions. Also, the supply of electricity to the warming element attached to the glass

generally requires the use of a low voltage and a so-called SELV connection device because of the risk of the glass being broken. Providing a SELV low voltage causes power losses and increases the costs when the number of power supplies increases. A transparent warming element fastened to the glass only heats the display on the front side, and the fluorescent tubes inside the display operate in considerably colder conditions than the TFT LCD matrix. The efficiency of fluorescent tubes used in connection with display devices generally weakens radically when the temperature falls, and therefore the brightness of the display may be significantly reduced in cold conditions.

Another solution for warming the display device is to heat it from behind by various warming resistors and corresponding arrangements. These solutions, again, entail the problem that the TFT LCD matrix on the front surface of the display may then operate in too cold conditions, whereby the response time of the display increases. In the worst case, the temperature of the TFT LCD matrix may fall below the storage temperature allowed for the display.

With regard to the cooling of information boards, the prior art solutions have the drawback that the displays are cooled by forced convection only from behind. However, the display elements produce heat in every direction. Most of the heat in plasma displays is generated on the side of the visible surface of the display. Therefore, the present display casings having a transparent window result in a significant rise of temperature in the upper parts of the display especially on the visible side of the display. In addition, the present solutions have the problem of temperature control caused by the integration of the electronics controlling the display and the actual display. As a result, there are often situations in which heat is cumulated in certain parts of the device when components that are warming increase the temperatures of each other. If the design has not been critically checked, temperatures may become too high locally.

Because of the inadequate cooling and warming solutions, the operating life of electronic information boards remains shorter than normal, or they are unnecessarily damaged. For example, the LCD matrix of TFT LCD display elements becomes inoperative already at the temperature of 70°C. If the temperatures cannot be made constant in different parts of the display element, the temperatures of the upper parts set a limit to the highest possible operating temperature allowed for the whole display device. The probability of the electronics of the device getting damaged in the hottest parts of the device also increases significantly. Because of

the problems related to the temperature control of electronic information boards, they are poorly suited for use in variable conditions, such as outdoors, where the differences of temperature at day and night and especially at different times of the year are very high. Because of this, electronic information boards are hardly ever used outdoors, but the conventional illuminated boards containing a paper poster are used instead.

It is an objective of the invention to provide an electronic information board, by which the drawbacks and shortcomings related to the temperature control of the prior art electronic information boards can be significantly reduced. Another objective of the invention is to provide an electronic information board, which tolerates well external variations of temperature and is thereby suitable for installation outdoors. In addition, it is an objective of the invention to provide an electronic information board, by which a conventional illuminated board containing a paper poster can be replaced.

The objectives of the invention are achieved by an electronic information board, which is characterized in what is set forth in the independent claims. Some preferred embodiments of the invention are presented in the dependent claims.

The invention relates to an electronic information board comprising a frame, a flat display element, such as a TFT LCD display or plasma display for displaying information, and electronic equipment for controlling the display element. The basic idea of the invention is that the display element and the electronics required for controlling the display are located separately from each other for facilitating the arrangements for temperature control and cooling of the information board. As a result, the information board has a modular structure, which also facilitates the maintenance and updating of the device. The information board has its own display casing for the display element and a device casing for the electronic equipment needed for controlling the display element. Cooling elements have also been arranged in the display casing for transferring heat from the display casing to the outside of the display casing. Preferably, the device casing contains at least the control unit of the information board, the power supply of the control unit and the power supply of the background light of the display.

In a preferred embodiment of the invention, there is a common cooling space between the display casing and the device casing, whereby the required cooling is provided both for the display element and the devices in the device casing. The

display casing and the device casing can preferably be separated from each other for opening the cooling space in order to perform updating and maintenance measures. Preferably, the information board has an openable cover, in which case the device casing has been installed in the cover.

In another preferred embodiment of the invention, the display casing and the device casing have been made weatherproof for enabling the performance of updating and maintenance measures outdoors.

In a third preferred embodiment of the invention, the display casing has a back wall bordered to the cooling space, and the cooling elements have been arranged in the back wall for transferring heat from the display casing to the cooling space. Preferably, there is a back cover bordered to the cooling space in the device casing, and cooling elements have been arranged in the back cover for transferring heat from the device casing to the cooling space. Preferably, the cooling elements have a first heat transfer part extending to the inside of the display casing and/or the device casing, and a second heat transfer part extending to the cooling space.

In a fourth preferred embodiment of the invention, there are ventilator slots or holes on the opposite sides of the cooling space for enabling air flow from the outside of the information board to the cooling space and from the cooling space back to the outside of the information board. In the cooling space there is preferably at least one cooling fan for circulating air through the cooling space.

In a fifth preferred embodiment of the invention, the display casing comprises a transparent front plate and an edge part. The front plate is preferably made of shock-resistant glass.

In a sixth preferred embodiment of the invention, the display element is supported at its edges to the edge part of the display casing by support elements so as to form a gap enabling the circulation of air between the walls of the display casing and the outer surface of the display element. Preferably, there are fans inside the display casing for circulating air in the space between the walls of the display element and the display casing, and ducting has been arranged between the walls of the casing and the display element for directing the circulation of air around the display element. There may also be electrically operated warming elements in the display casing for increasing the temperature of the display casing.

In a seventh preferred embodiment of the invention there are air ducts in the cooling space for directing the circulation of air. Preferably, there is at least one heat transfer part of at least one cooling element and at least one cooling fan in the air duct. The air ducts can be in a horizontal, vertical or oblique position.

The invention provides the advantage that the cooling and warming of the information board can be implemented very cost-efficiently. It is possible to use low-cost standard warming elements in the display casing, in which case no special warming resistors to be integrated in the glass are required.

In addition, the invention has the advantage that the display element of the information board can be easily changed when required, because the temperature control of the display is not based on the conduction of heat from certain physical points of the display.

Yet another advantage of the invention is that due to the efficient temperature control, it is possible to use large electronic displays in the information board, the external dimensions of the displays corresponding to the external dimensions of the paper posters used in the illuminated boards. In addition, the total depth of the information board is essentially the same or even smaller than in the illuminated boards. Because the physical size of an information board according to the invention is essentially the same as the size of illuminated paper poster boards, the replacement of a conventional illuminated board by an information board according to the invention does not require new permissions from the authorities and long permission procedures.

Furthermore, the invention has the advantage that it can be implemented both as a one-sided and a two-sided information board. A two-sided information board is formed by joining together two one-sided information boards. As an alternative, the other side of the information board can be a conventional, illuminated poster board.

Yet another advantage of the invention is that it is suitable for use both outdoors and indoors. The electronic display and the electronics related to the operation of the display device have been placed in their own separate casings, the enclosure class of which enables maintenance measures performed outdoors and easy updating of the device.

In the following, the invention will be described in detail. Reference will be made to the accompanying drawings, in which

Fig. 1 is a perspective drawing of an electronic information board according to the invention, presented as an example.

Fig. 2 is a cross-sectional drawing of an electronic information board according to the invention, presented as an example.

Fig. 3 is a perspective drawing of a preferred embodiment of an electronic information board according to the invention, presented as an example, and

Fig. 4 is a cross-sectional drawing of the information board of Fig. 3, presented as an example.

In Fig. 1, an electronic information board according to the invention is shown as an example, as depicted obliquely from behind. The information board has a closed display casing 10, to the back wall 22 of which a cover 24 opening on hinges 14 has been connected. The cover is trough-shaped, i.e. it has a flat bottom and edges turned to an angle from the plane of the bottom. A closed device casing 12 has been fastened to the bottom of the cover. The display element 26 of the information board (Fig. 2) has been placed inside the display casing, and the electronic equipment needed in the control of the display element have been placed inside the device casing. Typically, this equipment includes a programmable control unit with its power supply for controlling the display, and the power supplies of the background light of the display. The separation of the display element and control electronics from each other and placing them in their own casings makes it easier to control the temperature of the information board and to arrange the cooling thereof. In this way, the structure of the information board also becomes modular, which makes the manufacture of the device simpler and faster and facilitates the performance of maintenance and updating.

Fig. 1 shows an information board according to the invention in the opened position, in which the cover 24 of the information board has been turned on the hinges so as to be separated from the display casing. In this position it is easy to perform updating and maintenance measures of the information board. The cover has been connected to the display casing by a hold-open device 16, which keeps the cover at a certain angle in relation to the display casing. The enclosure class of the

display casing and the device casing is such that it enables updating and maintenance measures taking place outdoors. The information board according to the invention can be fastened to a wall or a support pole. Fastening to a wall takes place simply by fastening the cover of the information board directly to the surface of the wall by screws, for example.

In normal use, the display casing and the device casing are turned against each other to a closed position and locked to each other by locking means 18 on one side of the casings. In the closed position, there remains a cooling space 20 between the display casing and the device casing, delimited by the cover 24 and the display casing (Fig. 2). In the back wall 22 of the display casing and the back cover 28 of the device casing there are cooling elements 32, by which heat is transferred from the inside of the device casing and the display casing to the cooling air in the cooling space 20. The structure and operation of the cooling elements will be described in more detail in connection with the description of the drawings later in this document. In the first edge of the cover 24 pointed downward and the second edge pointed upward there are ventilator slots 34, which enable the movement of air from the outside of the device to the cooling space and from the cooling space back to the outside of the device. When required, the ventilator slots can be provided with filters in order to prevent the access of impurities to the ventilation space. In the cover 24 there are cooling fans 36, by which the circulation of air through the cooling space is regulated. The temperature and speed of flow of the air in the cooling space and thereby the transfer of heat from the cooling elements to the air is thus regulated with an air flow achieved by means of cooling fans.

In Fig. 2, an example of an electronic information board according to the invention is shown as a cross-sectional drawing. The information board has a frame 40 manufactured of metal piping, to the edge surface of which a lining plate 42 forming the visible outer surface has been fastened. The lining plate is preferably made of aluminium or steel. A display casing 10 comprising a back wall 22, a transparent front plate 46 and an edge part 44 having a flange-like fastening collar 48 running in the direction of the front plate has been fastened to the frame by fastening means 52. Preferably, the back plate and the edge parts have been formed of one plate-like part by some known plate machining method, such as pressing. The transparent front plate has been fastened to the fastening collar of the edge parts by means of flexible, vibration attenuating sealing elements 50 so that the edge parts of the front plate and the back wall form a closed display casing. The front

plate is preferably made of shock-resistant glass, but it is also possible to use other materials.

Inside the display casing there is a display element 26, which is supported at its edges by support elements 56 to the edge part of the display casing in a way that there remains a gap enabling the circulation of air between the walls of the display casing and the outer surface of the display element. The display element is preferably a TFT LCD display, which withstands static information significantly better than other display techniques. However, the display element can also be some other suitable, flat electronic display element, such as a plasma display, a LED display or an organic LED display.

In the back wall of the display casing there are cooling elements 32, which have a first heat transfer part 60 extending to the inside of the display casing and a second heat transfer part 62 extending to the cooling space 20 outside the display casing. The second heat transfer part comprises a number of plate-like cooling fins placed side by side. The operation of the cooling fins is based on the phenomenon that when the cooling air flows between the fins, heat is transferred from the cooling fins to the air of the cooling space. The task of the cooling elements is to transfer excess thermal energy from the display casing to the cooling space, from which it is further conducted by the air flow produced by the cooling fans 36 out from the entire device. Instead of the cooling fins or in addition to them, the second heat transfer part 62 of the cooling element 32 may also comprise other elements by which the transfer of heat from the cooling element to the cooling space is implemented. In particularly hot conditions, heat transfer based merely on cooling fins may not be sufficiently efficient. In that case, the second heat transfer part of the cooling elements may preferably comprise liquid-cooled elements or components.

The first heat transfer part may comprise cooling fins or conduction elements or both. A conduction element is a fixed body conducting heat well, which is placed so that it touches the heat source, whereby the heat is transferred from the heat source to the cooling element by conduction. Preferably, the conduction element has been fastened to the heat source, such as the surface of the display element, by flexible fastening paste, which fills up the irregularities of the surface of the heat source well and promotes the transfer of heat from the heat source to the conduction element.

The first cooling element 32, in which the first heat transfer part 60 extending to the display casing comprises cooling fins, is shown in the upper part of Fig. 2 by way of example. Inside the display casing on the back wall 22 there are fans 64, which circulate air in the space between the display element and the walls of the display casing. Suitable ducting 66 has been arranged between the display casing and the display element so that an air flow circulating the display element and equalizing the temperatures can be arranged by means of the fans. The fans 64 force the air of the inner casing to flow past the front plate 46 of the device. In cool conditions, the temperature of the front plate is naturally low. When the thermal conductivity of the front plate is selected suitably, the cool surface of the front plate cools the air flowing between the front plate and the display element. The fans circulating the air inside the display casing can be fastened so that when required, they can be easily changed in connection with the maintenance measures. The second cooling element 32, the first heat transfer part of which comprises a conduction element set against the surface of the display element 26, is shown by way of example in the lower part of Fig. 2. The conduction element has been fastened to the surface of the display plate preferably by glueing. Either conduction elements or cooling elements comprising cooling fins, or both, can be used in the display casing according to need. The cooling elements are preferably so-called Peltier elements.

In the display casing there are preferably also electrically operated warming elements 68 for raising the temperature of the display casing. In cold conditions, the warming elements produce heat, by which the effect of the front plate 46, which lowers the temperature inside, is compensated. The heat produced by the warming elements is transferred to the air inside, which is circulated in the display casing by means of an air flow produced by fans. For the above mentioned reasons, the warming elements need not be placed evenly on the area of the whole casing, but only at some points inside the casing. The warm air flow produced by the fans also keeps the front plate frost-free in all temperatures. The temperature of the display casing is measured by temperature sensors (not shown), and the measurement data is transmitted to a control unit located in the device casing. On the basis of the measurement results, the control unit regulates, according to need, the operation of the cooling fans 68 and the fans 64 in the display casing as well as the operation of the cooling fans 36 in the cooling space for achieving a suitable operating temperature in the display casing. A device switch-off function has been arranged in the control unit for making sure that the information board is not damaged in case of a failure of the temperature control system, such as in exception-

ally hot or cold conditions or in connection with power failures. The control unit also comprises means for sending a report to a predetermined control point in connection with a malfunction and automatic switch-off of the device. The report is preferably transmitted by a wireless communication link.

By means of the forced circulation of air inside caused by the fan, the temperatures of the inner parts of the display casing can be kept constant, and all the surfaces of the device can be used to transfer heat out from the inside of the display casing. Due to the forced inner circulation of air, the heat produced by a spotlike warming element or other heat source can be distributed efficiently and evenly to the whole inner space of the casing. The circulation of the inside air, implemented by flow ducts, enables cooling of the edges of the display element especially in the upper parts of the display casing. This is important especially in TFT LCD displays with regard to the cooling of the control circuits. The control circuits are located immediately inside the frame of the display element. Without efficient cooling, their temperatures would rise higher than in other parts of the display element. Because the control circuits are complicated microelectronics, even a small reduction of operating temperatures helps to improve their reliability significantly.

The warming and cooling of components in the device casing 12 can be implemented by a corresponding cooling solution as described above in connection with the display casing. Then the cooling or warming air flow circulates as forced past all the components becoming warmed. As an alternative, in low-power devices the cooling can be implemented by circulating air merely by cooling elements arranged in the back cover of the device casing without an internal circulation of air in the device casing. This is possible, because the control electronics withstand variations of temperature and high temperatures clearly better than the display element. A control system can be made for controlling the temperatures of the device casing individually, or it can be integrated as a part of the temperature control system of the display casing.

Fig. 3 shows an example of a preferred embodiment of an electronic information board according to the invention as a perspective drawing seen obliquely from behind. The drawing depicts the cooling space of the information board in particular, and the cover of the information board and parts connected to it are not shown in it. Fig. 4 shows the embodiment of Fig. 3 as a cross-sectional drawing. In this preferred embodiment of the invention, one or more flow controllers 70 made of a shaped metal sheet have been fastened to the back wall 22 of the display casing

10. Together with the back wall, the flow controllers fastened to it form one or more essentially horizontal flow ducts 72, inside which the second heat transfer parts 62 of the cooling elements 32 and the cooling fans 36 fastened to the back wall are placed. The number of cooling fans has been designed so that there is at least one cooling fan in each cooling duct. In the vertical side walls of the frame of the information board, at the ends of the flow ducts there have been formed ventilator holes 74, which enable the air flow produced by the cooling fans to pass along the flow duct through the cooling space 20. Circulation of cooling air implemented by horizontal flow ducts can be used in information boards of all sizes, but it is particularly well suited for use in large information boards, in which the temperature otherwise tends to rise high in the upper parts of the cooling space.

In Figs. 3 and 4, the flow ducts have been formed in a horizontal position. It is clear to a person skilled in the art that by applying the same principle, it is also possible to form flow ducts in the cooling space in a vertical or oblique position.

Some preferred embodiments of an electronic information board according to the invention have been described above. The information board can be made according to the user's needs and preferences to the desired size. In particular, the information board can be made to the same size as the prior art illuminated advertisement boards, in which case the physical dimensions of the display element correspond to the dimensions generally used in paper posters. Mechanical fastening of the information boards to the support structures can be implemented at the upper or lower edge of the board, from behind or from the sides of the board.

The invention is not limited to the above described solutions only, but the inventive idea can be applied in numerous ways within the scope defined by the claims.

Claims

1. An electronic information board comprising a frame (40), a flat display element (26) for displaying information and electronic equipment for controlling the display element, **characterized** in that the information board has a display casing (10), inside which the display element has been placed, and a device casing (12), inside which the electronic equipment needed in the control of the display element have been placed, and the display casing comprises cooling elements (32) for transferring heat from the display casing to the outside of the display casing.

2. An information board according to Claim 1, **characterized** in that there is a cooling space (20) between the display casing (10) and the device casing (12).

3. An information board according to Claim 2, **characterized** in that the display casing (10) and the device casing (12) can be separated from each other for performing updating and maintenance measures.

4. An information board according to Claim 3, **characterized** in that it has an openable cover (24) and that the device casing (12) has been installed in the cover.

5. An information board according to any one of the claims 1 to 4, **characterized** in that in the device casing (12) there is at least the control unit of the information board, the power supply of the control unit and the power supply of the background light of the display.

6. An information board according to any one of the claims 3 to 5, **characterized** in that the display casing (10) and the device casing (12) have been made weatherproof for performing updating and maintenance measures outdoors.

7. An information board according to any one of the claims 2 to 6, **characterized** in that the display casing (10) has a back wall (22) delimited by the cooling space (20) and that the cooling elements (32) have been arranged in the back wall for transferring heat from the display casing to the cooling space.

8. An information board according to any one of the claims 1 to 7, **characterized** in that the display casing (12) has a back cover (28) delimited by the cooling

space (20), having cooling elements (32) for transferring heat from the device casing to the cooling space.

9. An information board according to Claim 7 or 8, **characterized** in that the cooling elements (32) have a first heat transfer part (60) extending to the inside of the display casing (10) and/or the device casing (12) and a second heat transfer part (62) extending to the cooling space (20).

10. An information board according to Claim 9, **characterized** in that the first heat transfer part (60) of the cooling element (32) comprises cooling fins and/or conduction elements, and the second heat transfer part comprises cooling fins.

11. An information board according to Claim 10, **characterized** in that the conduction elements of the cooling element have been fastened to the heat source by flexible fastening paste.

12. An information board according to any one of the claims 2 to 11, **characterized** in that there are ventilator slots (34) or ventilator holes (74) on the opposite sides of the cooling space (20) for enabling an air flow from the outside of the information board to the cooling space and from the cooling space back to the outside of the information board.

13. An information board according to any one of the claims 2 to 11, **characterized** in that there is at least one cooling fan (36) in the cooling space (20) for circulating air through the cooling space.

14. An information board according to any one of the claims 1 to 13, **characterized** in that the display casing (10) comprises a transparent front plate (46) and an edge part (44).

15. An information board according to Claim 14, **characterized** in that the front plate (46) is made of shock-resistant glass.

16. An information board according to Claim 14 or 15, **characterized** in that the display element (26) is supported at its edges by support elements (56) to the edge part of the display casing so that there is a gap enabling the circulation of air between the walls of the display casing and the outer surface of the display element.

17. An information board according to Claim 16, **characterized** in that there are fans (64) inside the display casing (10) for circulating air in the space between the display element (26) and the walls of the display casing (10).

18. An information board according to Claim 17, **characterized** in that ducting (66) has been arranged between the walls of the display casing (10) and the display element (26) so as to control the air flow circulating round the display element.

19. An information board according to any one of the claims 1 to 18, **characterized** in that there are electrically operated warming elements (68) in the display casing (10) for raising the temperature of the display casing.

20. An information board according to any one of the Claims 1 to 19, **characterized** in that there are flow ducts (72) in the cooling space (20) for controlling the air flow.

21. An information board according to Claim 20, **characterized** in that in the flow duct (72) there is at least one heat transfer part (62) of at least one cooling element (32) and at least one cooling fan (36).

22. An information board according to Claim 20 or 21, **characterized** in that the flow ducts (72) have been formed in a horizontal, vertical or oblique position.

23. An information board according to any one of the claims 1 to 22, **characterized** in that the display element (26) is a TFT LCD display, a plasma display, a LED display or an organic LED display.

24. An information board according to any one of the Claims 1 to 23, **characterized** in that its depth in the direction of the normal of the front plate is under 25 cm.

25. An information board according to any one of the claims 1 to 24, **characterized** in that the dimensions of the display element (26) correspond to the size class of paper posters generally used in illuminated advertising boards.

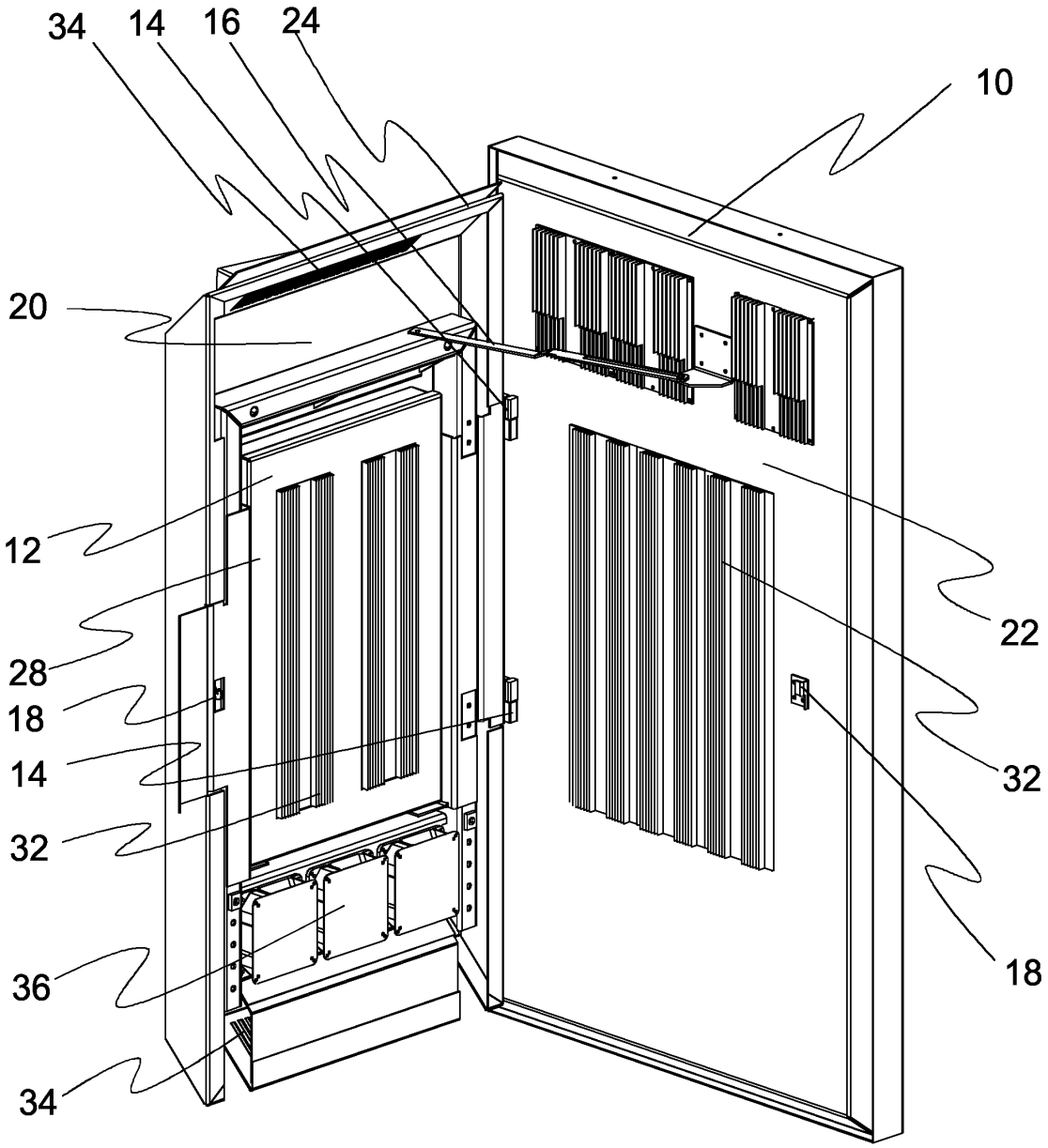

Fig.1

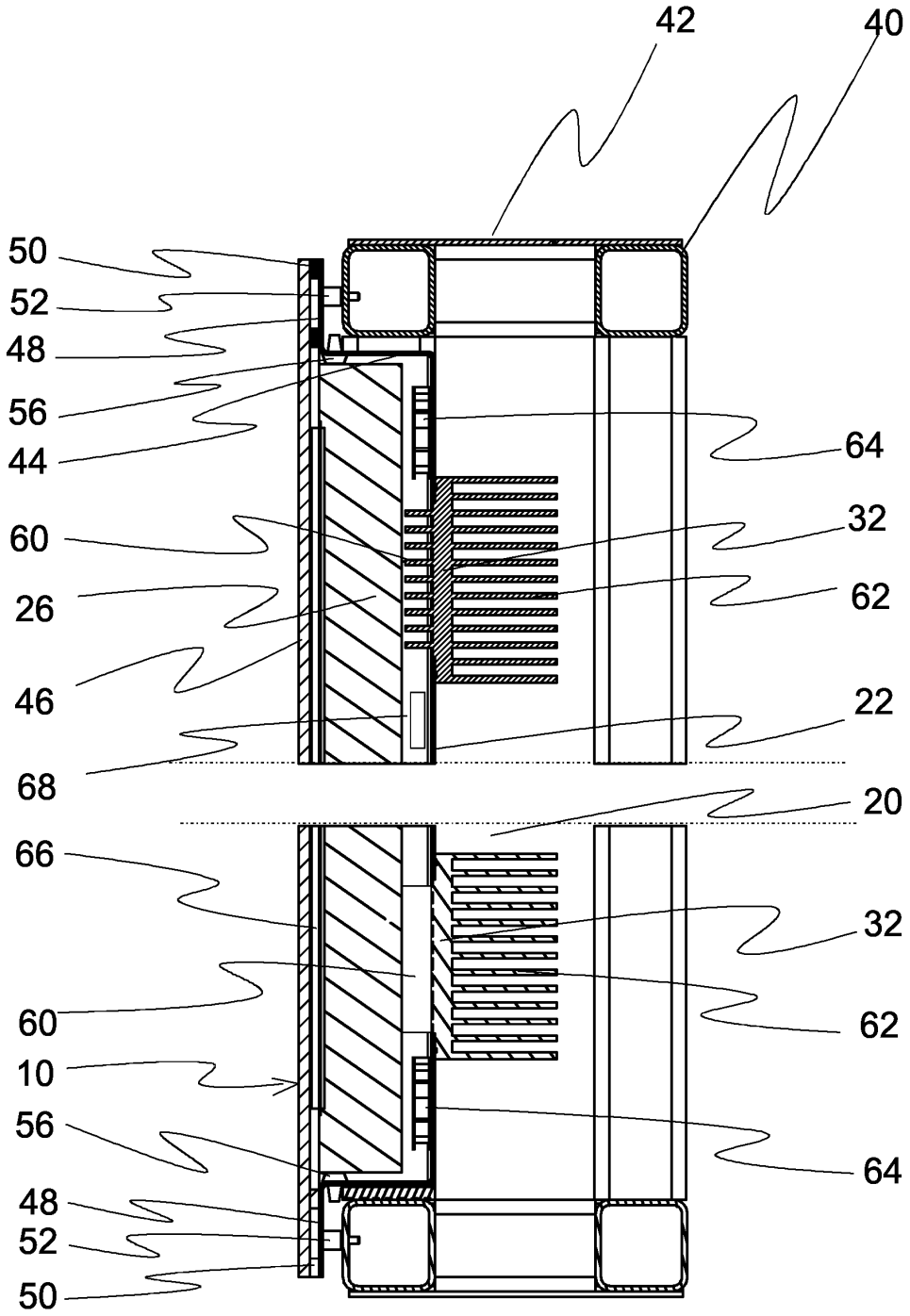
42
40
50
52
48
56
44
60
26
46
68
66
60
10
56
48
52
50
64
32
62
22
20
32
62
64

Fig. 2

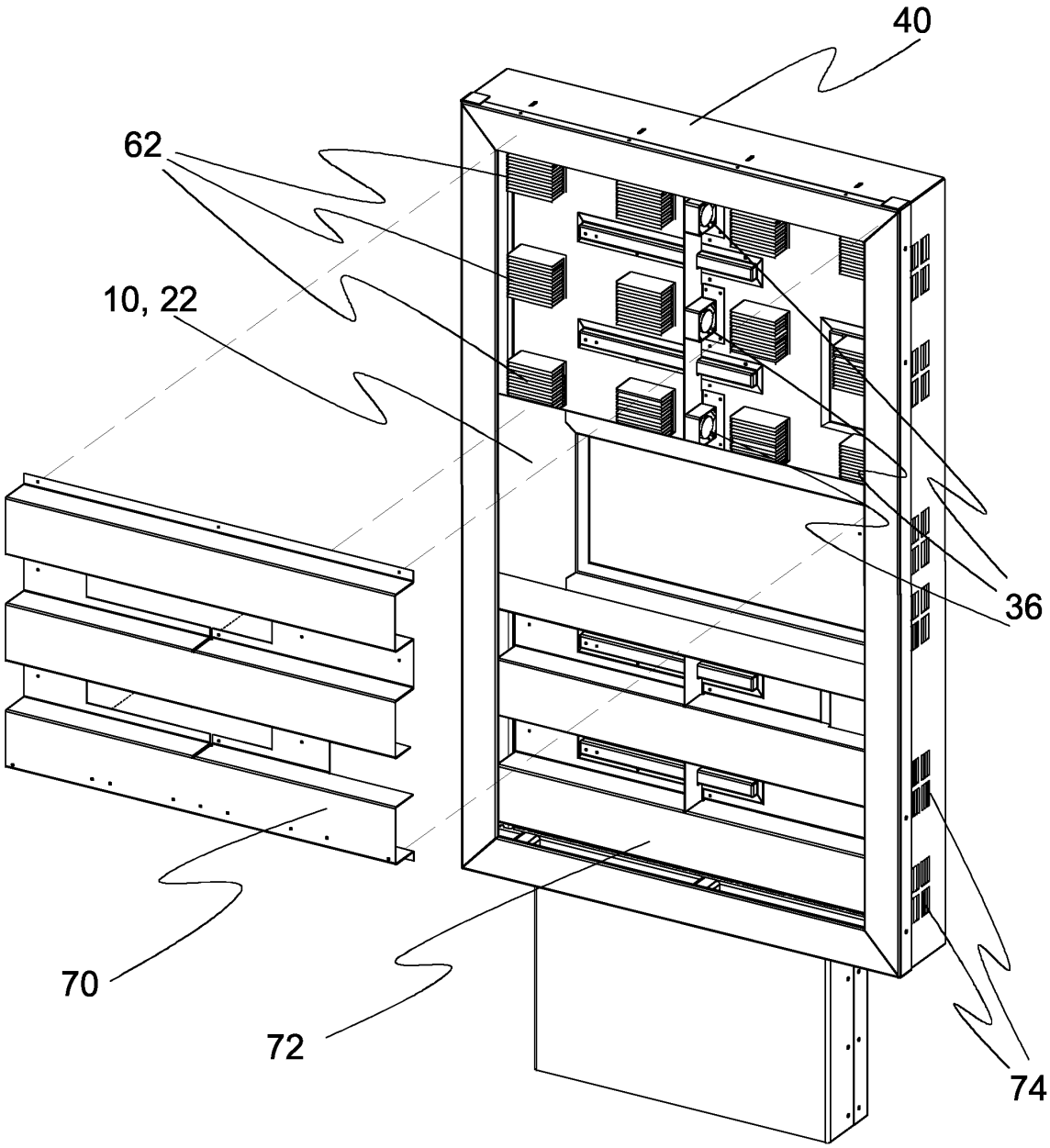

Fig. 3

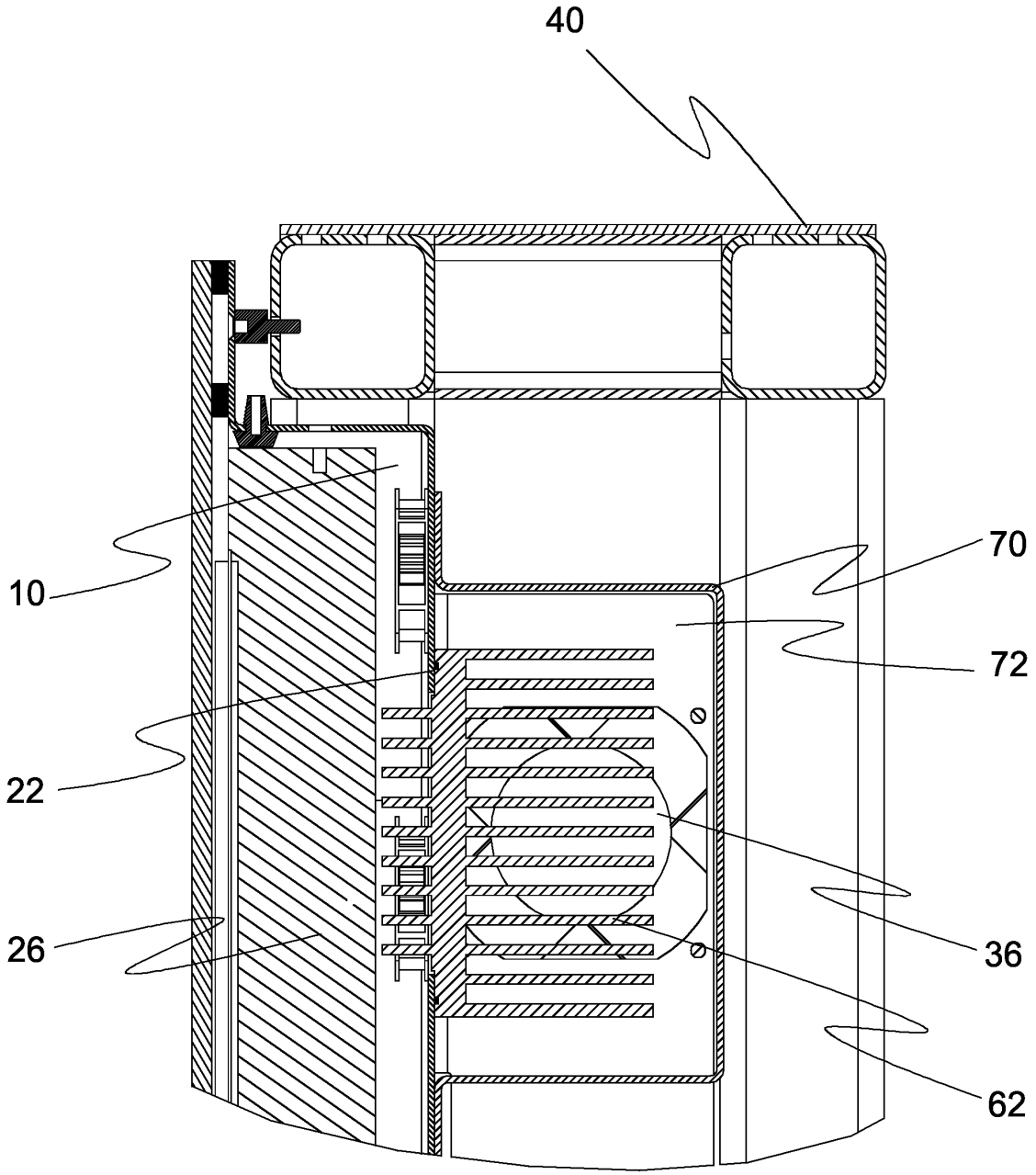

Fig. 4

INTERNATIONAL SEARCH REPORT

International application No.
PCT/FI2006/050145

A. CLASSIFICATION OF SUBJECT MATTER

See extra sheet

According to International Patent Classification (IPC) or to both national classification and IPC

B. FIELDS SEARCHED

Minimum documentation searched (classification system followed by classification symbols)

IPC8: G09F

Documentation searched other than minimum documentation to the extent that such documents are included in the fields searched

FI, SE, NO, DK

Electronic data base consulted during the international search (name of data base and, where practicable, search terms used)

EPO-internal, WPI

C. DOCUMENTS CONSIDERED TO BE RELEVANT

Category*	Citation of document, with indication, where appropriate, of the relevant passages	Relevant to claim No.
	JP 2006011314 A (FUJI XEROX CO LTD) 12 January 2006 (12.01.2006)	
X		1, 5, 14, 16
Y		3, 4, 6, 9, 10, 11, 15, 17-22, 24, 25
	& abstract [online] EPOQUENET EPODOC & abstract [online] EPOQUENET WPI & Computer translation, retrieved via the internet from the Japanese Patent Office EPODOC- and WPI-abstracts and paragraphs [0006], [0013], [0031], [0037] and [0043] of the computer translation and figures 6, 7 and 9	
	JP 2005196000 A (SHARP KK) 21 July 2005 (21.07.2005)	
X		1, 2, 5, 7, 8 12, 13, 23
Y		3, 4, 6, 9, 10, 11, 15, 17-22, 24, 25

☒ Further documents are listed in the continuation of Box C. ☒ See patent family annex.

* Special categories of cited documents:

"A" document defining the general state of the art which is not considered to be of particular relevance

"E" earlier application or patent but published on or after the international filing date

"L" document which may throw doubts on priority claim(s) or which is cited to establish the publication date of another citation or other special reason (as specified)

"O" document referring to an oral disclosure, use, exhibition or other means

"P" document published prior to the international filing date but later than the priority date claimed

"T" later document published after the international filing date or priority date and not in conflict with the application but cited to understand the principle or theory underlying the invention

"X" document of particular relevance; the claimed invention cannot be considered novel or cannot be considered to involve an inventive step when the document is taken alone

"Y" document of particular relevance; the claimed invention cannot be considered to involve an inventive step when the document is combined with one or more other such documents, such combination being obvious to a person skilled in the art

"&" document member of the same patent family

Date of the actual completion of the international search	Date of mailing of the international search report
30 November 2006 (30.11.2006)	02 January 2007 (02.01.2007)

Name and mailing address of the ISA/FI	Authorized officer
National Board of Patents and Registration of Finland P.O. Box 1160, FI-00101 HELSINKI, Finland	Tapani Salonen
Facsimile No. +358 9 6939 5328	Telephone No. +358 9 6939 500

Form PCT/ISA/210 (second sheet) (April 2005)

SEC et al. v. MRI
SEC Exhibit 1004.0021
IPR2023-00221

INTERNATIONAL SEARCH REPORT

International application No.
PCT/FI2006/050145

C (Continuation). DOCUMENTS CONSIDERED TO BE RELEVANT

Category*	Citation of document, with indication, where appropriate, of the relevant passages	Relevant to claim No.
	& abstract [online] EPOQUENET EPODOC & abstract [online] EPOQUENET WPI & Computer translation, retrieved via the internet from the Japanese Patent Office EPODOC- and WPI-abstracts and paragraphs [0001], [0016], [0017], [0018], [0019], [0020], [0021], [0022] and [0023] of the computer translation	
Y	JP 2004029290 A (NIPPON LIGHT METAL CO) 29 January 2004 (29.01.2004) & abstract [online] EPOQUENET EPODOC & abstract [online] EPOQUENET WPI & Computer translation, retrieved via the internet from the Japanese Patent Office EPODOC- and WPI-abstracts and paragraphs [0001], [0020], [0023], [0030] and [0039] of the computer translation	3
Y	JP 7319402 A (KOKUSAI ELECTRIC CO LTD) 08 December 1995 (08.12.1995) & abstract [online] EPOQUENET EPODOC & abstract [online] EPOQUENET WPI & Computer translation, retrieved via the internet from the Japanese Patent Office EPODOC- and WPI-abstracts and paragraph [0019] of the computer translation	4
Y	GB 2387472 A (MCNAIR HOWARD CHRISTOPHER) 15 October 2003 (15.10.2003), page 1 lines 1-8, page 2 lines 1-22; claim 6; figure 2	6
Y	JP 2005084270 A (SHARP KK) 31 March 2005 (31.03.2005) & abstract [online] EPOQUENET EPODOC & abstract [online] EPOQUENET WPI & Computer translation, retrieved via the internet from the Japanese Patent Office EPODOC- and WPI-abstracts and paragraphs [0023] and [0024] of the computer translation and figures 18 and 19	9. 10
Y	JP 2005338541 A (NIPPON SEIKI CO LTD) 08 December 2005 (08.12.2005) & abstract [online] EPOQUENET EPODOC & abstract [online] EPOQUENET WPI & Computer translation, retrieved via the internet from the Japanese Patent Office EPODOC- and WPI-abstracts and paragraphs [0018] and [0029] of the computer translation	9, 10, 11

SEC et al. v. MRI
SEC Exhibit 1004.0022
IPR2023-00221

INTERNATIONAL SEARCH REPORT

International application No.
PCT/FI2006/050145

C (Continuation). DOCUMENTS CONSIDERED TO BE RELEVANT

Category*	Citation of document, with indication, where appropriate, of the relevant passages	Relevant to claim No.
Y	"Going big with TFT LCD" Retrieved from the Internet URL: http://www.hightechfinland.com/2006/communications/software/en_GB/imagon/ [retrived on 2006-11-30] whole document	15, 24, 25
L	Google's cache of http://www.hightechfinland.fi/2006/en_GB/frontpage_14/ as retrieved by Google on 27 Feb 2006 21:32:24 GMT. URL : http://www.google.com/search?q=cache:sZIzIUwQgxMJ:www.hightechfinland.fi/2006/en_GB/frontpage_14/+%22imagon+international%22&hl=en&ct=clnk&cd=39 [retrived on 2006-11-30] contains link to the document "Going big with TFT LCD" demonstrating that the document was available to the public at the latest on February 2006	
Y	EP 1253459 A2 (GILBARCO INC) 30 October 2002 (30.10.2002), paragraphs [0024], [0025]; fig 1	17, 18
Y	FR 2817700 A1 (THOMSON CSF) 07 June 2002 (07.06.2002), claim 1; figures 3 and 4	19
Y	JP 10222076 A (FUJITSU LTD) 21 August 1998 (21.08.1998) & abstract [online] EPOQUENET EPODOC & abstract [online] EPOQUENET WPI & Computer translation, retrieved via the internet from the Japanese Patent Office EPODOC- and WPI-abstracts and paragraphs [0026], [0033] and [0036] of the computer translation	20, 21, 22

SEC et al. v. MRI
SEC Exhibit 1004.0023
IPR2023-00221

INTERNATIONAL SEARCH REPORT
Information on patent family members

International application No.
PCT/FI2006/050145

Patent document cited in search report	Publication date	Patent family members(s)	Publication date
JP 2006011314 A	12/01/2006	None	
JP 2005196000 A	21/07/2005	None	
JP 2004029290 A	29/01/2004	None	
JP 7319402 A	08/12/1995	None	
GB 2387472 A	15/10/2003	None	
JP 2005084270 A	31/03/2005	None	
JP 2005338541 A	08/12/2005	WO 2005064577 A1	14/07/2005
EP 1253459 A2	30/10/2002	US 2002154255 A1	24/10/2002
FR 2817700 A1	07/06/2002	None	
JP 10222076 A	21/08/1998	None	

SEC et al. v. MRI
SEC Exhibit 1004.0024
IPR2023-00221

INTERNATIONAL SEARCH REPORT

International application No.
PCT/FI2006/050145

CLASSIFICATION OF SUBJECT MATTER

Int.Cl.
G09F 9/313 (2006.01)
G09F 9/33 (2006.01)
G09F 9/35 (2006.01)
G09F 19/22 (2006.01)

SEC et al. v. MRI
SEC Exhibit 1004.0025
IPR2023-00221