(12) UK Patent Application (19) GB (11) 2 402 205 (13) A

(43) Date of A Publication 01.12.2004

(21) Application No: 0311575.5

(22) Date of Filing: 20.05.2003

(71) Applicant(s):
Densitron Technologies PLC
(Incorporated in the United Kingdom)
Unit 4 Airport Industrial Estate,
BIGGIN HILL, Kent, TN16 3BW,
United Kingdom

(72) Inventor(s):
Leslie John Yare

(74) Agent and/or Address for Service:
Williams Powell
Morley House, 26-30 Holborn Viaduct,
LONDON, EC1A 2BP, United Kingdom

(51) INT CL[7]:
H04N 5/64 , F25D 23/12 , F28D 3/00 11/02 15/02 , F28F 3/00

(52) UK CL (Edition W):
F4U U22X U25B
F4H H2F H2H H2L
F4S S4B
U1S S2283 S2286

(56) Documents Cited:
CN 001110453 A
JP 090307257 A
US 6474410 A
JP 100042226 A
JP 060268388 A
US 6039111 A

(58) Field of Search:
UK CL (Edition V) **F4H, F4U**
INT CL[7] **A47F, F24F, F25B, F25D, F28B, F28C, F28D, F28F, H04N**
Other: **ON-LINE : WPI; EPODOC; JAPIO; EPOQUE English Full TXTE;**

(54) Abstract Title: **A display system cabinet and display system including heat removal means**

(57) A display cabinet 10 has a sealed airtight compartment 30 for mounting a display system 20, and includes heat transfer means 70, such as a corrugated heat exchanger, to dissipate heat from the airtight compartment to the surrounding environment via thermal communication with an unsealed atmospheric zone 40. Heat is dissipated by air drawn through vents 60 and the atmospheric air zone 40 by at least one fan 50, which passes across one or more surfaces of the heat exchanger 70. Within the sealed compartment at least one fan 25 circulates air through a rear portion 35, behind a baffle plate 90 and also across the heat exchanger 70. The airtight compartment may include a pressurised zone 85 created by at least one fan 80, and the heat transfer means may alternatively include a heat pipe, a refrigeration unit, a flat plate heat exchanger, or a heat wheel. The display system may include one or more of a plasma display, an LCD display, a TFT display, a CRT display, an LED display, a projection display.

Fig. 1

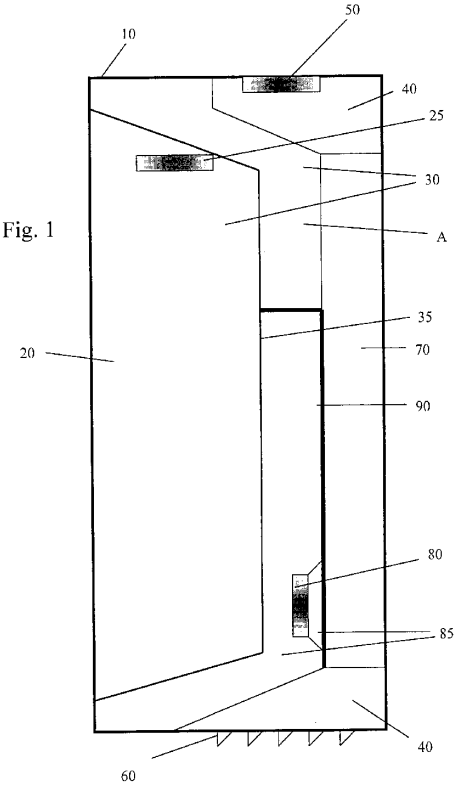

GB 2 402 205 A

This print incorporates corrections made under Section 117(1) of the Patents Act 1977.

Original Printed on Recycled Paper

SEC et al. v. MRI
SEC Exhibit 1006.0001
IPR2023-00221

115

Fig. 1

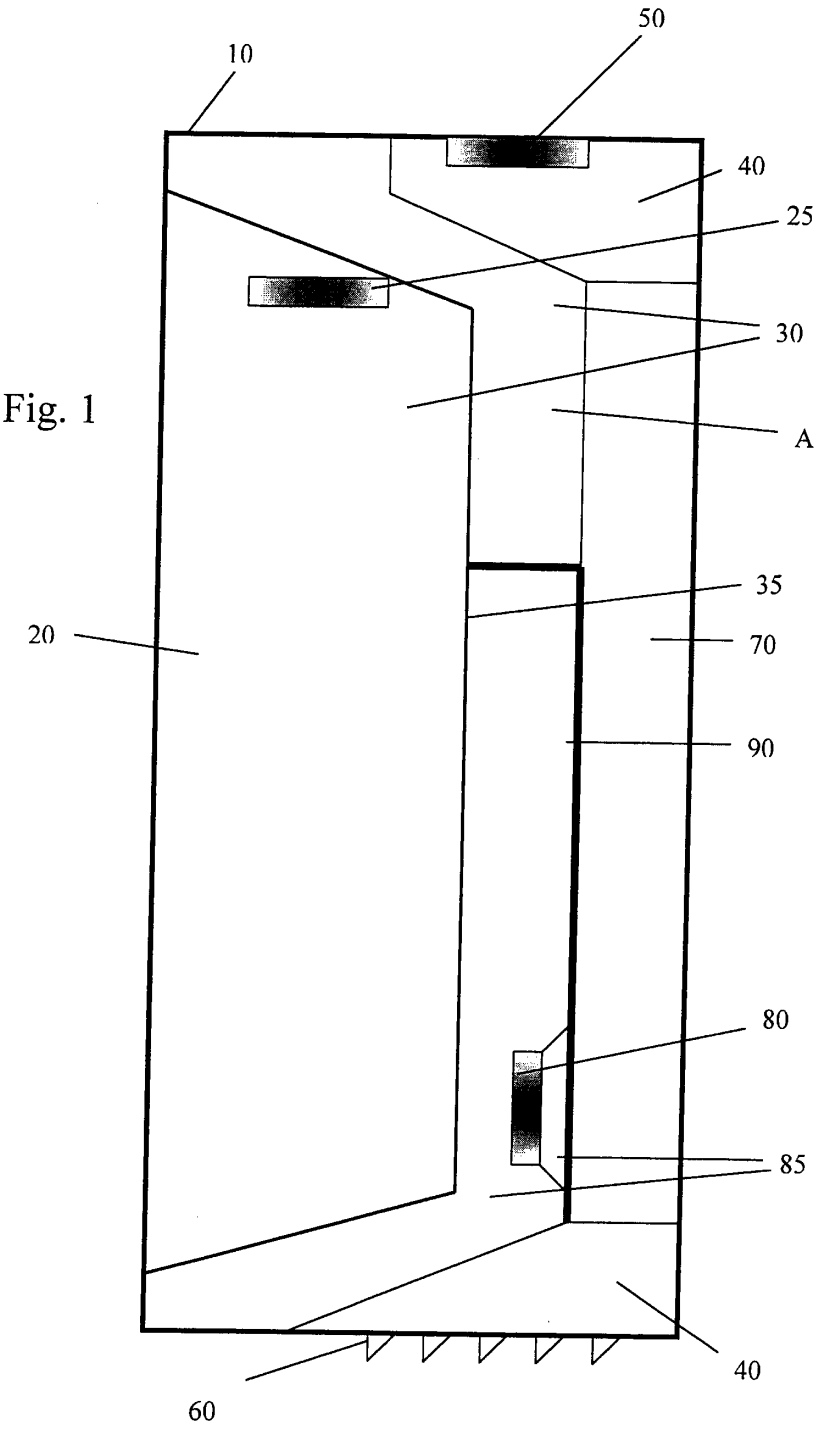

Fig 3

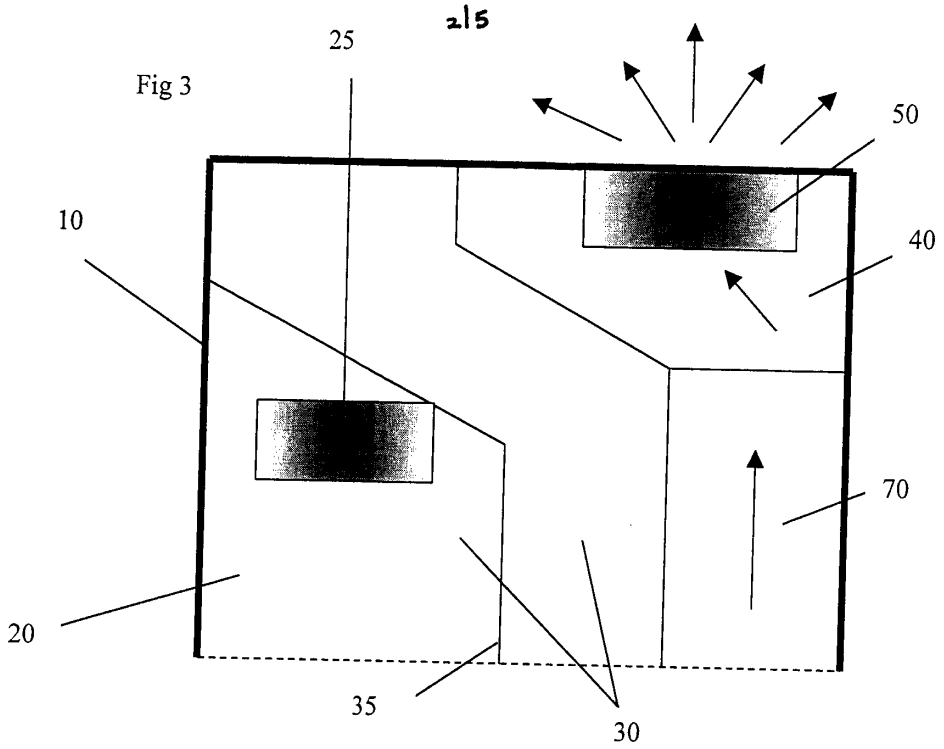

Fig 2

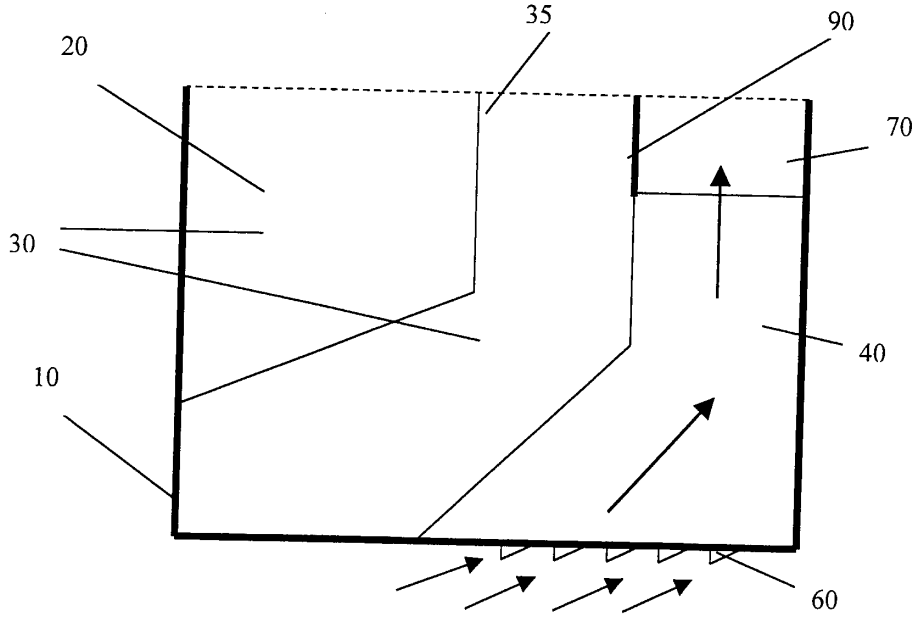

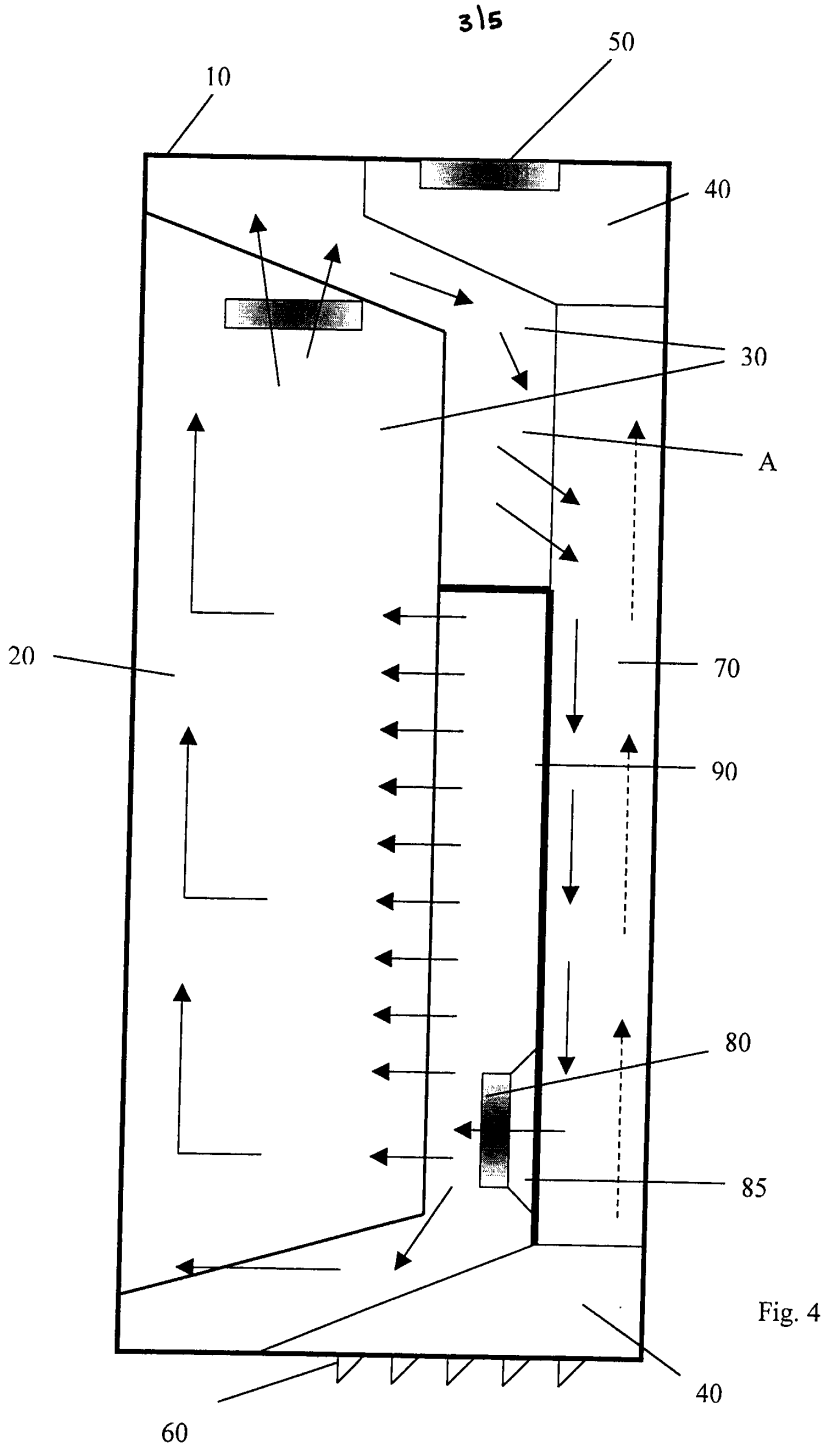

Fig. 4

Fig. 5

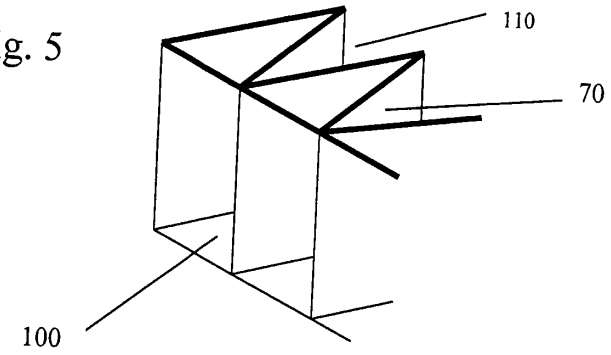

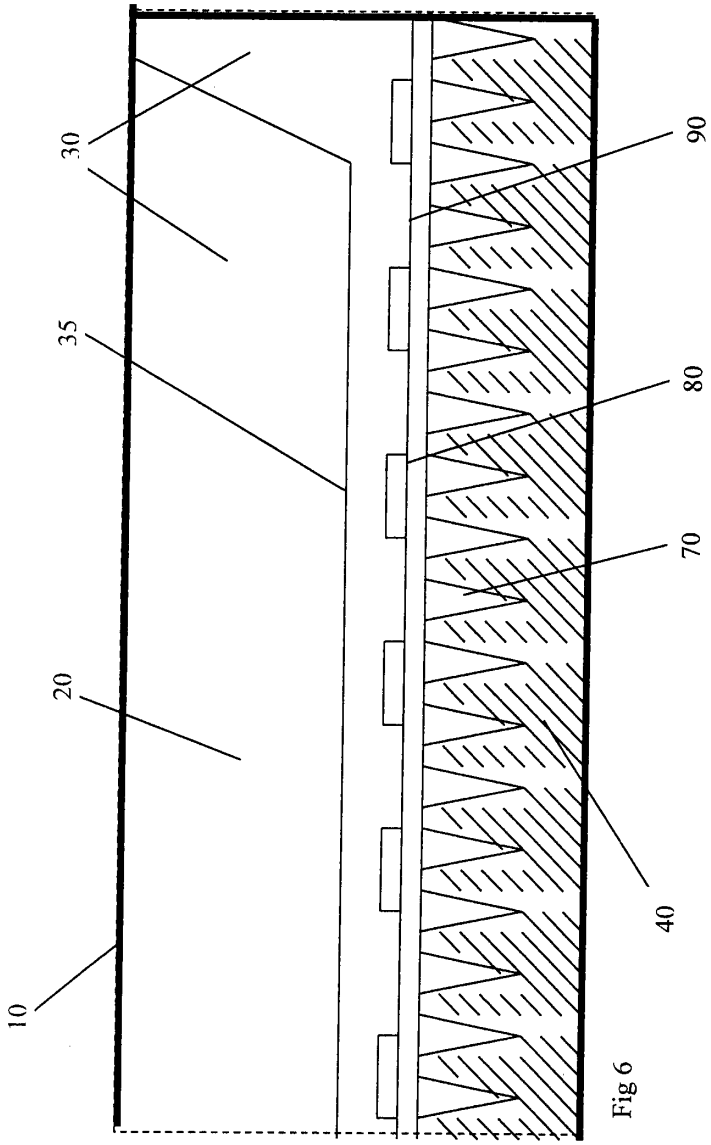

Fig 6

Display System Cabinet and Display System

Field of the Invention

The present invention relates to a cabinet for mounting a display system, the cabinet having improved cooling facilities and which is particularly suitable for use in providing large scale displays in public places.

Background to the Invention

Large scale electronic image and/or video display systems are used in many places, for example, to provide public information or display advertising materials. Such displays must have a size and resolution sufficient for information can be viewed from a distance.

In order to provide large display screens, plasma, LCD or rear projection technologies are commonly used. However, such screens can generate a lot of heat and it is therefore essential for them to have an efficient cooling system to remove the heat from the display in order for it to function normally.

Unfortunately, in many public places where there is a large quantity of human or vehicle traffic the cooling system can become clogged with dust, dirt and general pollution. In this situation, the cooling system becomes inefficient and may compromise the functionality of the display by causing it to overheat, resulting in temporary or permanent failure of the display system.

In order to address this problem, many display systems use filters at the interface between the cooling system and the external environment. However, filters eventually become clogged and inefficient and compromise the system and therefore require monitoring and/or changing regularly. Where the display system is mounted in an inaccessible location, as is often the case for such systems, this maintenance is particularly troublesome and is of annoyance to operators.

Summary of the Invention

According to one aspect of the present invention, there is provided a display cabinet comprising a substantially atmospherically sealed zone including means for mounting

a display system in the substantially atmospherically sealed zone and heat transfer means arranged to transfer heat out of the substantially atmospherically sealed zone.

The present invention seeks to provide a sealed display system having a cooling system that is substantially unaffected by pollution, dust or dirt in the atmosphere.

In a preferred embodiment, a zone of the cabinet containing the display system is sealed to the external environment. The sealed zone includes an internal cooling system that is not open to atmospheric air. Atmospheric air is drawn into a separate zone that allows heat to be exchanged between the two zones. Heat is then removed by expulsion of heated atmospheric air from the casing.

Advantageously, the lifetime of a display is increased due to elimination of ingress of dirt and the like into the display. In addition, the cooling system of the present invention is arranged to co-operate with existing internal cooling systems of the display to improve the effectiveness of the display's cooling system.

The display cabinet may further comprise an atmospheric zone, the heat transfer means being arranged to communicate heat from the substantially atmospherically sealed zone to the atmospheric zone.

The atmospheric zone may include air transfer means arranged to draw air from outside the cabinet and expel air in the atmospheric zone heated by the heat transfer means.

The air transfer means may include one or more fans.

The heat transfer means may comprise a heat exchanger.

The heat exchanger may comprise a corrugated heat conducting sheet having a first side in the substantially atmospherically sealed zone and a second side in the atmospheric zone.

The substantially atmospherically sealed zone may include air circulation means arranged to circulate air along the heat transfer means.

The air circulation means may include a baffle plate.

The substantially atmospherically sealed zone may include air pressurisation means arranged to project air within the atmospherically sealed zone into circulate air along the mounted display.

The air pressurisation means may include one or more fans.

The heat transfer means may include one or more of: a refrigeration unit, heat pipes, flat plates and a heat wheel, although it will be apparent that the heat transfer means may include other systems or methods.

The display cabinet may include a display system such as a plasma display, an LCD, a TFT display, a CRT display, a LED display, a projector or a rear projection display. It will be appreciated that any display could be used and the cabinet could also be adapted to cater for new technologies as and when necessary.

Brief Description of the Drawings

An example of the present invention will now be described in detail, by way of example only, with reference to the accompanying drawings in which:

Figure 1 is a cross section of a display system according to an embodiment of the present invention;

Figure 2, 3 and 4 are show parts of the cross section of Figure 1 in more detail;

Figure 5 is a perspective view of part of a heat exchanger suitable for use in the present invention; and,

Figure 6 is a cross section of part of the embodiment of Figure 1 along a line substantially perpendicular to the cross-section of Figure 1.

Detailed Description

Figure 1 is a cross section of a display system according to an embodiment of the present invention.

A cabinet 10 is arranged to contain a display 20 for displaying information, advertisements or other visual media. The display is sealed within the cabinet in a sealed zone 30. In operation, the components of the display 20 create heat inside the display 20 in the sealed zone 30. Vents and other venting means (not shown) allow air to travel through a rear portion 35 of the display 20, although the air is sealed within the sealed zone 30.

The cabinet 10 also includes an atmospheric air zone 40. Air from the outside of the cabinet 10 is drawn through vents 60 into the atmospheric air zone 40 by fans 50. The fans 50 draw the air up through the atmospheric air zone 40. The air is then expelled from the cabinet 10 through the fans 50. Arrows in figures 2 and 3 show the passage of air through the vents 60 into the atmospheric air zone 40 and out through the fans 50, respectively.

The cabinet 10 includes a heat exchanger 70 mounted on a baffle plate 90. Also mounted on the baffle plate 90 are fans 80. The sealed zone 30 and atmospheric air zone 40 are sealed from each other to prevent the passage of air, dirt and the like. The heat exchanger 70 is arranged to communicate heat between the sealed zone 30 ad the atmospheric zone 40.

Arrows in Figure 4 illustrate the movement of air in both the atmospheric air zone 40 and in the sealed zone 30 of the cabinet 10 in more detail. Dotted arrows show movement of air in the atmospheric air zone 40 whilst solid arrows show movement of air in the sealed zone 30.

Air is drawn through the atmospheric air zone 40 by fans 50. As the air is drawn through the atmospheric air zone 40 it passes across one or more surfaces of the heat exchanger 70. Similarly, air within the sealed zone 30 is drawn into the heat exchanger 70 behind the baffle plate 90 by the fans 80 at point A and passes across one or more other surfaces of the heat exchanger 70.

Air is circulated within the sealed zone 30 due to operation of the fans 80 within the cabinet and fans 25 within the display 20. Air coming into contact with hot components of the display 20 absorbs some of the heat. Due to operation of the fans 25 and 80 and orientation of the baffle plate 90, air within the sealed zone 30 is directed along one or more surfaces of the heat exchanger 70 around the baffle plate 90. Heat is transferred by the heat exchanger 70 from hot air in the sealed zone 30 to cooler atmospheric air within the atmospheric air zone 40. Heated air in the atmospheric air zone 40 is eventually ejected from the cabinet via exhausts in the fans 50.

The cooled air in the sealed zone is then forced through the fans 80 at the base of the heat exchanger 70 into a pressure zone 85.

As air is forced into the pressure zone 85, existing air in the pressure zone 85 is forced through vents in the rear portion 35 of the display 20. The air circulates around the display 20, aided by a standard internal cooling system of the display 20. In the illustrated embodiment, the internal cooling system includes the fans 25. The air is heated by hot components as it circulates, and is drawn upwards by the fans 25 within the display unit and blown out of the rear portion 35 for the cycle to continue.

The pressure zone 85 is created by forcing air into the zone using a bank of fans 80 at the base of the baffle plate 90. Due to the speed and number of the fans air is forced into the pressure zone more rapidly than it can escape elsewhere. In this manner, air is forced into the display 20 at a greater rate than is normally the case, thereby improving the efficiency of the display's own fans. As a result, more air passes through taking more heat away with it as it goes.

The baffle plate 90 on the side of the sealed zone 30 divides air expelled from the rear portion 35 of the display 20 and ensures air flows properly in the desired direction, along the heat exchanger towards the fans 80, allowing the pressure to be increased on one side of it.

In this manner, the sealed zone 30 is cooled without the ingress of atmospheric air.

Figure 5 is a perspective view of part of a heat exchanger suitable for use in the present invention.

In the illustrated embodiment of the present invention, the heat exchanger 70 is formed from corrugated metal, thereby increasing the surface area in contact with both the atmospheric air zone 40 and the sealed zone 30. The heat exchanger is sealed at the top and the bottom on the inner side to prevent atmospheric air 110 and the re-circulating air 100 within the sealed zone from mixing.

It will be apparent that other heat exchange arrangements or mechanisms could be used depending on the expected environment the product would be placed in. For example, the heat exchanger 70 could be: a refrigeration unit, heat pipes, flat plates, a heat wheel or one of the many other heat exchangers known.

The cooling process need not be in the form of air to air transfer of heat. For example, cooling could be via atmospheric air to another gas sealed within the sealed zone 30, air to a liquid (or air to liquid within heat pipes or the like to air), gas to a liquid, liquid to liquid etc.

The fans 80 are mounted to the baffle plate 90 which is in turn mounted to the heat exchanger 70. This assembly is then mounted within the cabinet 10 whilst allowing appropriate passage of air within the sealed zone 30 behind the baffle plate 90 into contact with the heat exchanger 70.

Figure 6 is a cross section of part of the embodiment of Figure 1 along a line substantially perpendicular to the cross-section of Figure 1.

Various forms of display system may be used, for example plasma, LCD, TFT, CRT, LED, rear projection or any similar technology.

The sealed zone may be created by use of gaskets formed from silicon, rubber, foam or the like.

The above-described embodiment significantly reduces the possibility of operational failure by removal of ingress of dirt and the like from the display system 20. In order to maintain full cooling effectiveness, intermittent cleaning of the vents 60 and fans 50 along with infrequent cleaning of the heat exchanger in the atmospheric zone 40 is suggested. Due to the design and configuration of the cabinet and components, it will be appreciated that these areas are much easier to clean than in prior systems facilitating reduced downtime and maintenance costs. Furthermore, separation of the display system 20 from dirt and the like results in a longer life for the display system and a more efficient heat transfer.

Thermal fuses may be provided in the atmospheric zone and in the sealed zone to disable the display system (and possibly fans) in the event that a predetermined temperature (for example 40°C) indicative of an air blockage in atmospheric zone, failure of the heat exchanger, fan failure, a fire or the like. Advantageously, since air within the sealed zone is limited, should a fire occur in the sealed zone, any smoke created would be contained and the fire should burn out very quickly due to lack of oxygen. Obviously if it is desired, the air within the sealed zone can be replenished or refreshed by opening and then resealing the sealed zone.

The fans 80 in the sealed zone are preferably temperature controlled and operate independently of the rest of the system.

Claims

1. A display cabinet comprising a substantially atmospherically sealed zone including means for mounting a display system in the substantially atmospherically sealed zone and heat transfer means arranged to transfer heat out of the substantially atmospherically sealed zone.

2. A display cabinet according to claim 1, further comprising an atmospheric zone, the heat transfer means being arranged to communicate heat from the substantially atmospherically sealed zone to the atmospheric zone.

3. A display cabinet according to claim 2, wherein the atmospheric zone includes air transfer means arranged to draw air from outside the cabinet and expel air in the atmospheric zone heated by the heat transfer means.

4. A display cabinet according to claim 3, wherein the air transfer means includes one or more fans.

5. A display cabinet according to any preceding claim, wherein the heat transfer means comprises a heat exchanger.

6. A display cabinet according to claim 5, wherein the heat exchanger comprises a corrugated heat conducting sheet having a first side in the substantially atmospherically sealed zone and a second side in the atmospheric zone.

7. A display cabinet according to any preceding claim, wherein the substantially atmospherically sealed zone includes air circulation means arranged to circulate air along the heat transfer means.

8. A display cabinet according to claim 7, wherein the air circulation means includes a baffle plate.

9. A display cabinet according to any preceding claim, wherein the substantially atmospherically sealed zone includes air pressurisation means arranged to project air within the atmospherically sealed zone into circulate air along the mounted display.

10. A display cabinet according to claim 9, wherein the air pressurisation means includes one or more fans.

11. A display cabinet according to any one of claims 1 to 5, wherein the heat transfer means includes one or more of: a refrigeration unit, heat pipes, flat plates and a heat wheel.

12. A display cabinet as claimed in any one of the preceding claims including a display system.

13. A display cabinet as claimed in claim 12, wherein the display system includes one or more of: a plasma display, an LCD, a TFT display, a CRT display, a LED display, a projector and a rear projection display.

14. A display cabinet as herein described and with reference to the accompanying drawings.

15. A display system as herein described and with reference to the accompanying drawings.

The Patent Office

INVESTOR IN PEOPLE

Application No: GB 0311575.5
Claims searched: 1-14

Examiner: Brian A Woods
Date of search: 14 November 2003

Patents Act 1977 : Search Report under Section 17

Documents considered to be relevant:

Category	Relevant to claims	Identity of document and passage or figure of particular relevance	
X	1-7,9-13	US 6474410	(MINICH) See whole document noting a sealed container for a display device, including a transparent viewing screen 16, a cooling fan 44 and a finned heat exchanger 46 in communication with the environment.
X	1 at least	CN 1110453	(CUI HANPING) See whole document noting sealed TV including heat pipe. Also see WPI abstract accession number 1997-373687 [35]
X	1 at least	JP 100042226	(FUKADA) See whole document noting airtight case having main body 1, liquid crystal screen 2a, heat exchanger 12, etc. Also see WPI abstract accession number 1998-186289 [17] .
X	1 at least	JP 090307257	(FUJITSU) See whole document noting a plasma screen 4 within an airtight case 1, and including a heat exchanger 6 and a refrigeration cooling system 8.
A		US 6039111	(DENSO) See whole document noting sealed enclosure and heat transfer means.
A		JP 060268388	(NIPPON) See whole document noting sealed enclosure and heat transfer means.

Categories:

X	Document indicating lack of novelty or inventive step	A	Document indicating technological background and/or state of the art.
Y	Document indicating lack of inventive step if combined with one or more other documents of same category.	P	Document published on or after the declared priority date but before the filing date of this invention.
&	Member of the same patent family	E	Patent document published on or after, but with priority date earlier than, the filing date of this application.

Field of Search:

Search of GB, EP, WO & US patent documents classified in the following areas of the UKC[V]:

F4H; F4U

Worldwide search of patent documents classified in the following areas of the IPC[7]:

SEC et al. v. MRI
SEC Exhibit 1006.0016
IPR2023-00221

The Patent Office

INVESTOR IN PEOPLE

Application No:	GB 0311575.5	**Examiner:**	Brian A Woods
Claims searched:	1-14	**Date of search:**	14 November 2003

A47F; F24F; F25B; F25D; F28B; F28C; F28D; F28F; H04N

The following online and other databases have been used in the preparation of this search report:

WPI; EPODOC; JAPIO; EPOQUE English Full TXTE;

SEC et al. v. MRI
SEC Exhibit 1006.0017
IPR2023-00221