US006825828B2

(12) **United States Patent**
Burke et al.

(10) **Patent No.: US 6,825,828 B2**
(45) **Date of Patent: Nov. 30, 2004**

(54) **BACKLIT LCD MONITOR**

(75) Inventors: **Thomas J. Burke**, Ellington, CT (US); **Gary Elco**, Ellington, CT (US); **Bryan Gudrian**, South Windsor, CT (US)

(73) Assignee: **General Digital Corporation**, South Windsor, CT (US)

(*) Notice: Subject to any disclaimer, the term of this patent is extended or adjusted under 35 U.S.C. 154(b) by 139 days.

(21) Appl. No.: **10/080,983**

(22) Filed: **Feb. 21, 2002**

(65) **Prior Publication Data**

US 2002/0167637 A1 Nov. 14, 2002

Related U.S. Application Data

(60) Provisional application No. 60/270,848, filed on Feb. 23, 2001.

(51) **Int. Cl.**[7] **G09G 3/36**

(52) **U.S. Cl.** **345/101**; 345/102

(58) **Field of Search** 345/102, 87, 77, 345/589–605, 101

(56) **References Cited**

U.S. PATENT DOCUMENTS

5,844,540	A	12/1998	Terasaki	345/102
5,854,617	A	12/1998	Lee et al.	345/102
6,188,378	B1	2/2001	Yamamoto et al.	345/101
6,255,784	B1	7/2001	Weindorf	315/291

Primary Examiner—Dennis-Doon Chow
Assistant Examiner—Aaron S. Ward
(74) *Attorney, Agent, or Firm*—Cantor Colburn LLP

(57) **ABSTRACT**

An exemplary embodiment of the invention is a backlit liquid crystal display (LCD) monitor comprising a backlight assembly, a cooling assembly, a rear cover assembly and a controller. The controller monitors temperature and controls cooling accordingly. The controller also monitors bulb luminance and adjusts bulb current accordingly. Faults are monitored and logged so that predictive repair before failure analysis may be performed.

13 Claims, 16 Drawing Sheets

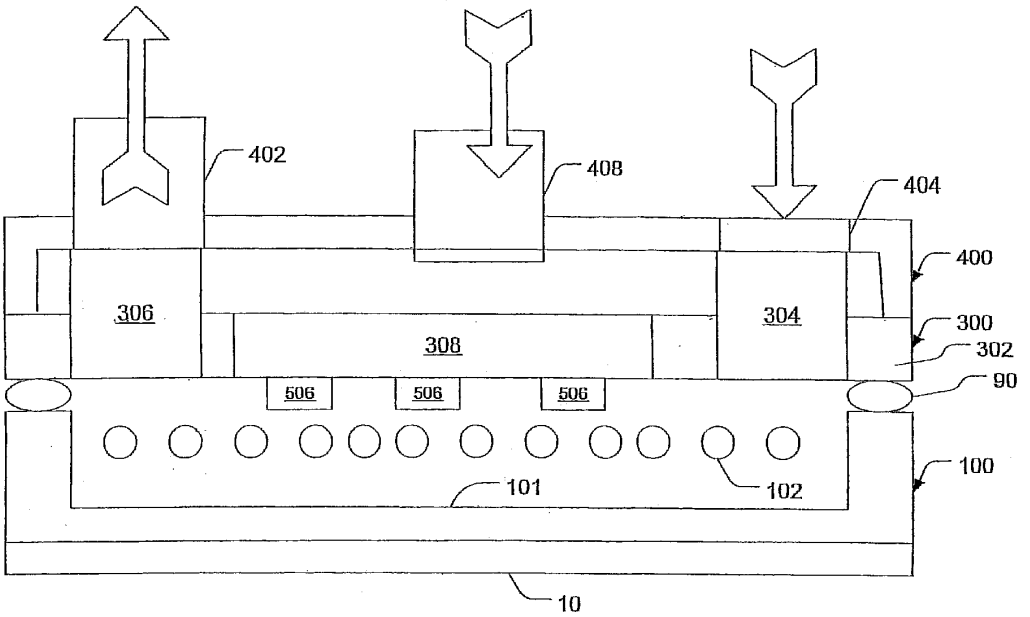

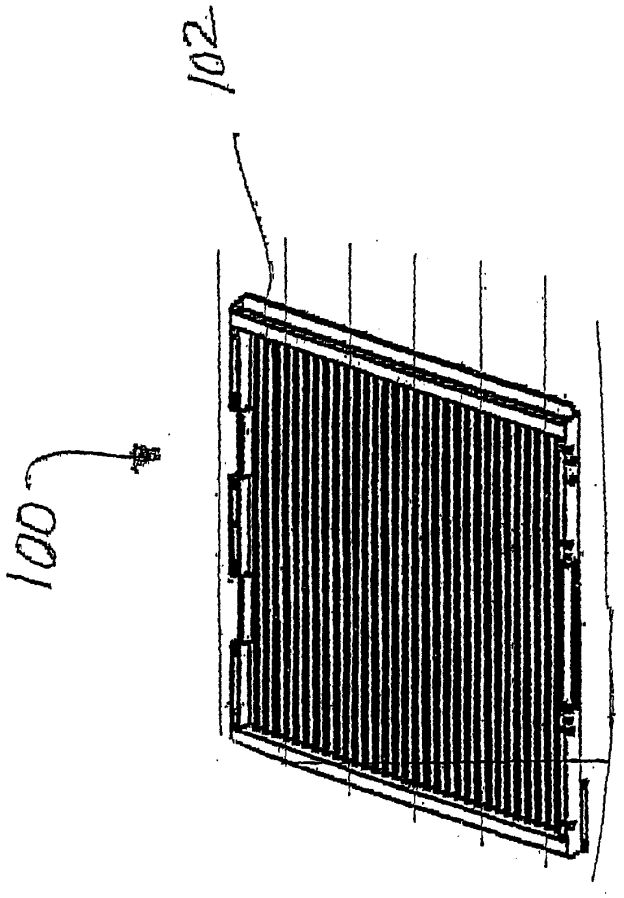

FIG. 1

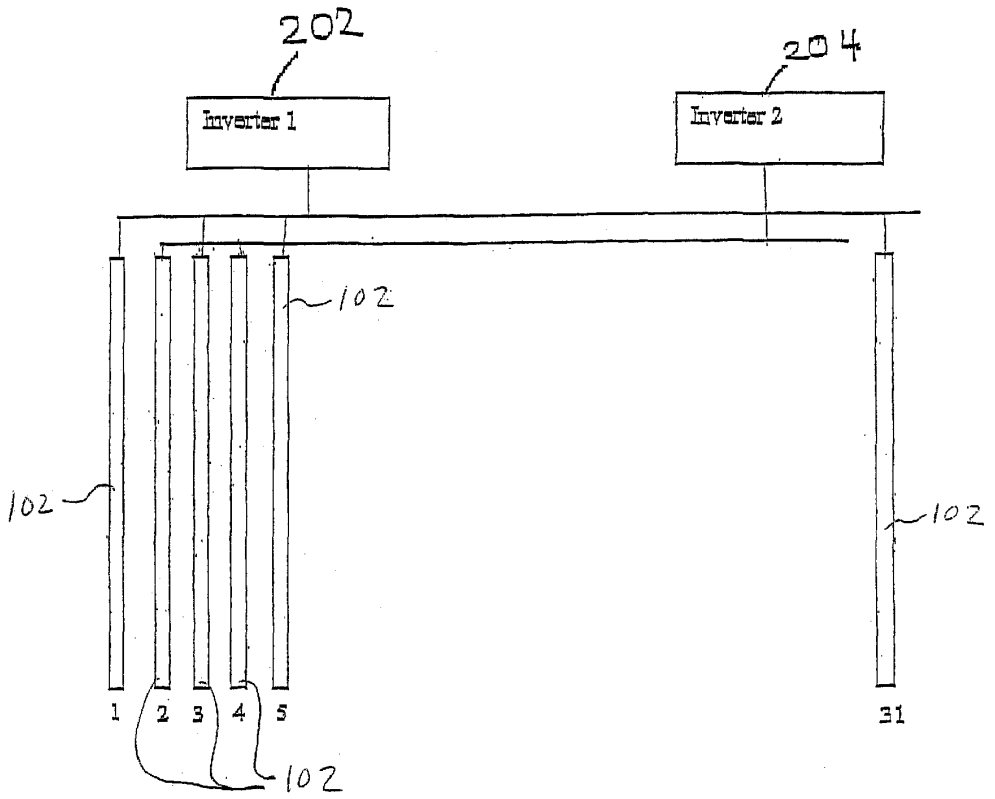

FIG. 2

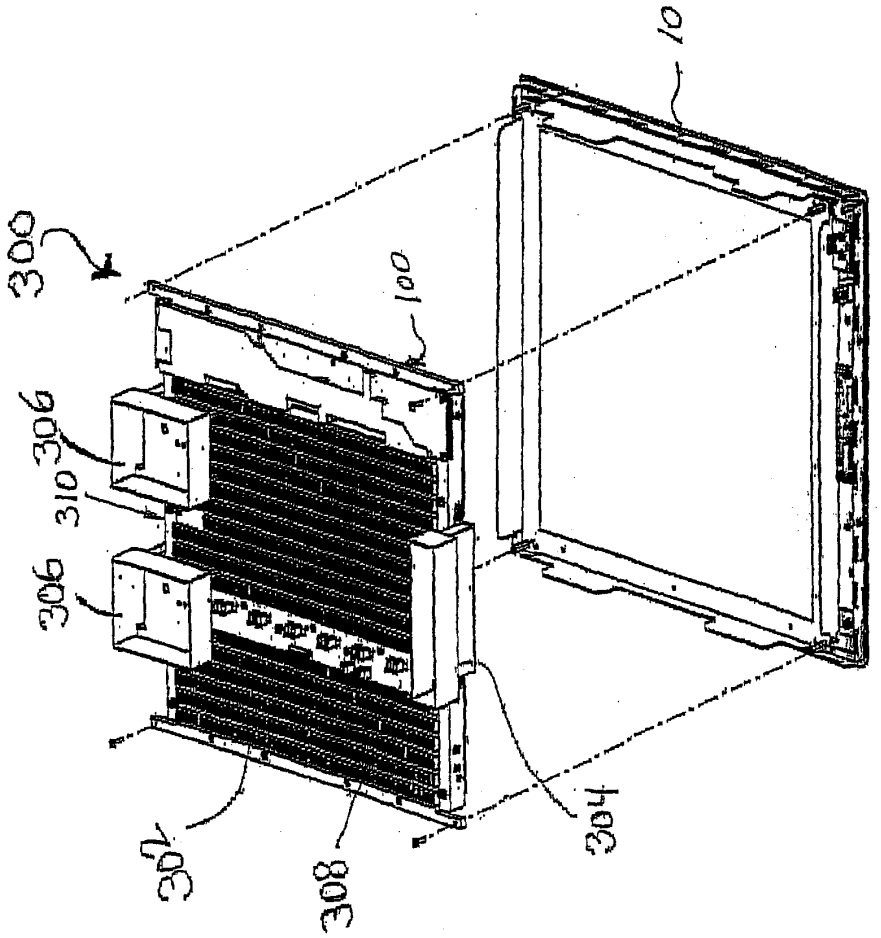

FIG. 3

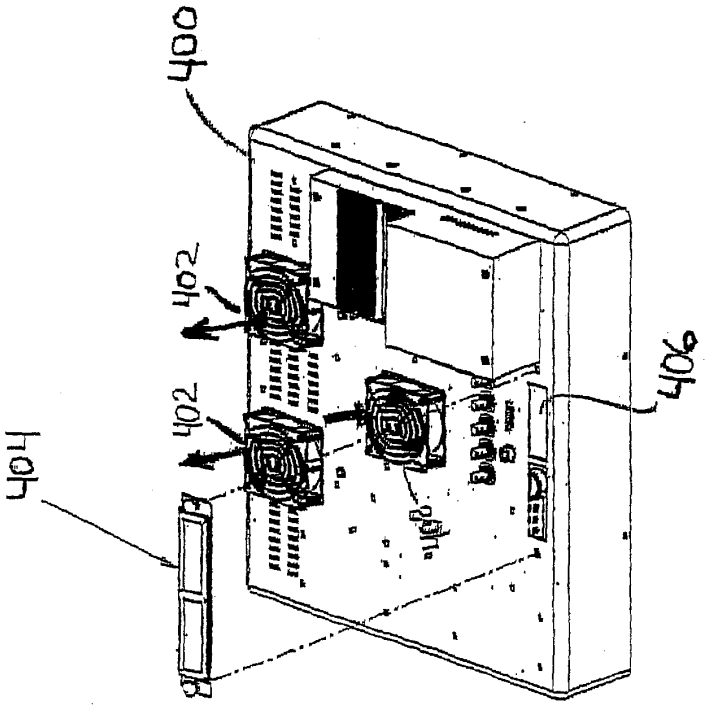

FIG. 4A

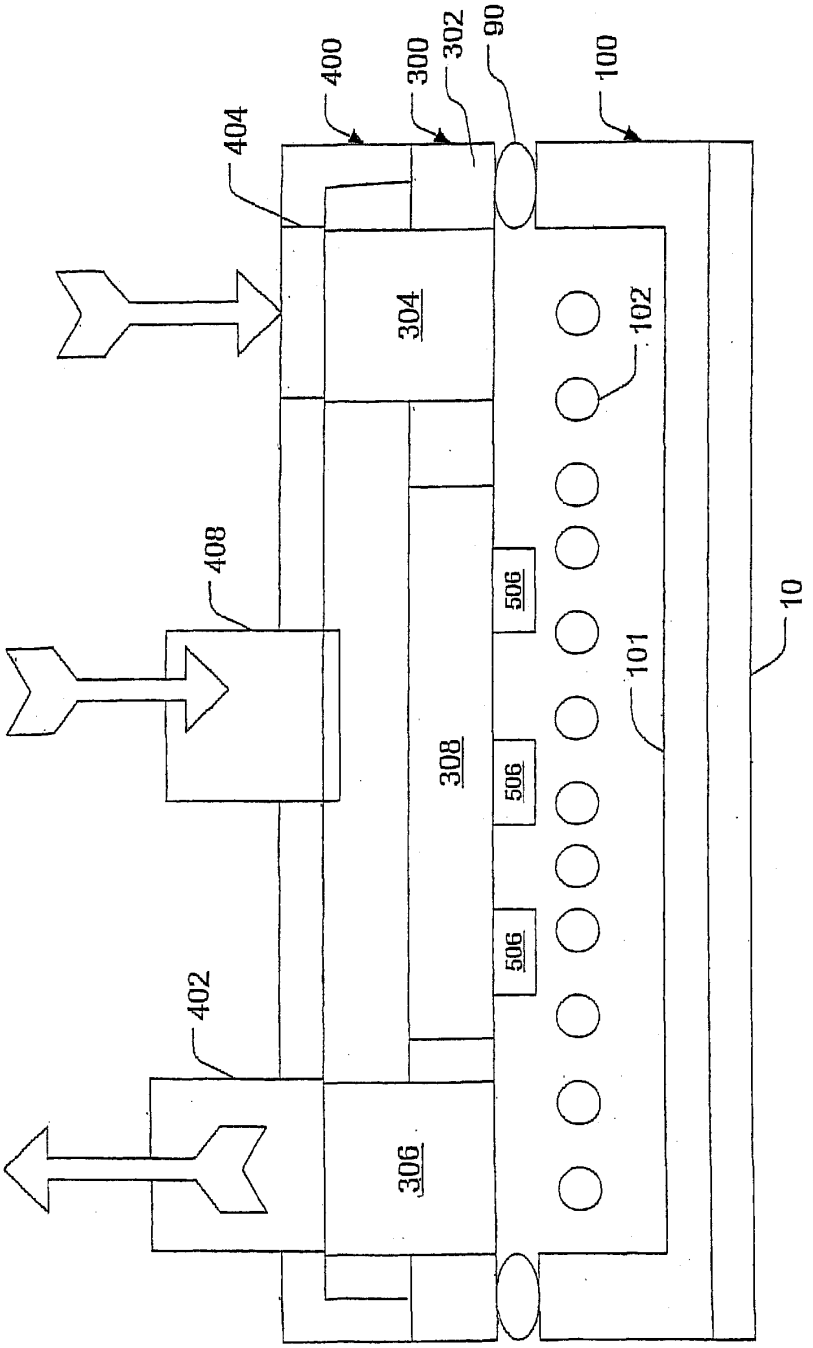

FIG. 4B

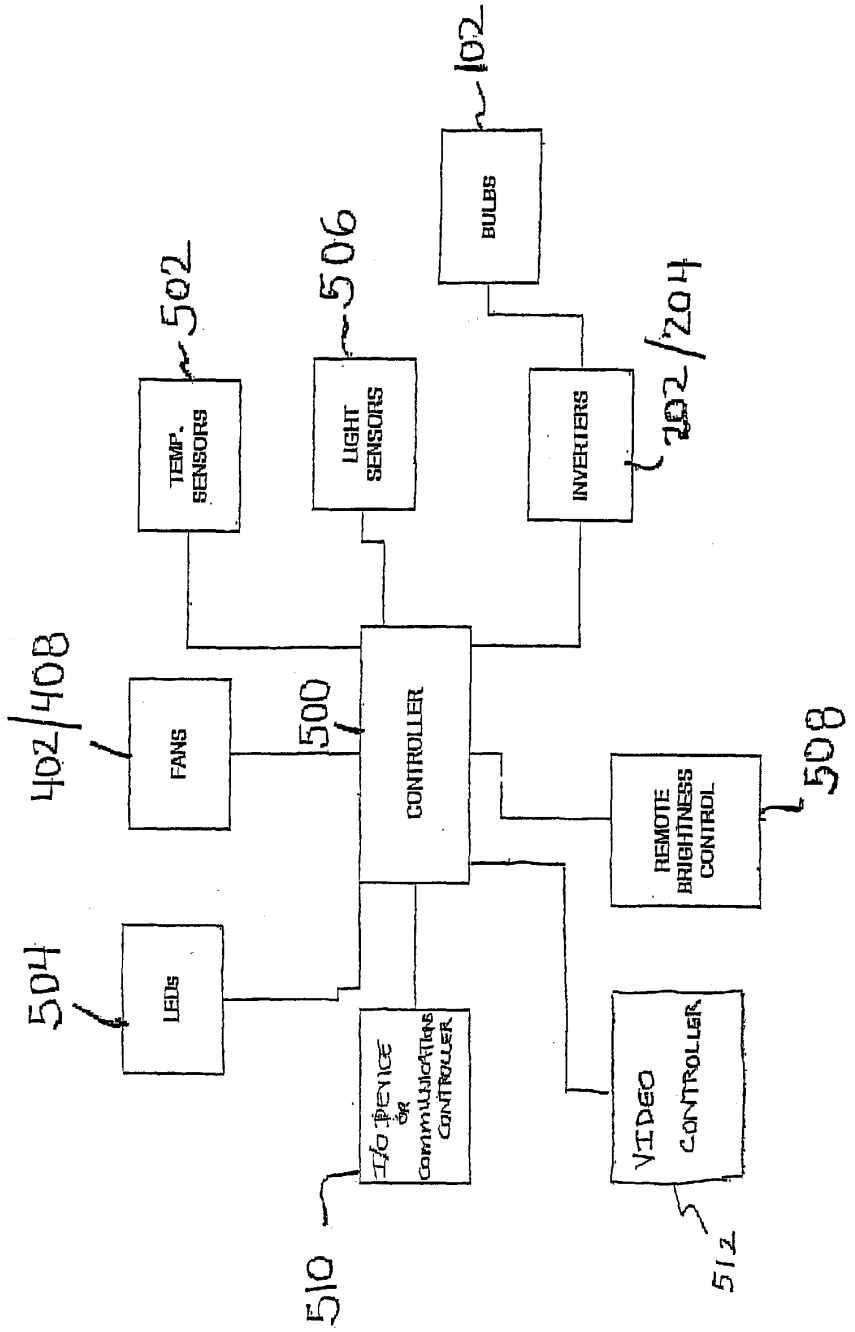
BULBS
102
TEMP. SENSORS
502
LIGHT SENSORS
506
INVERTERS
202/204
FANS
402/408
CONTROLLER
500
REMOTE BRIGHTNESS CONTROL
508
LEDs
504
I/O DEVICE OR COMMUNICATIONS CONTROLLER
510
VIDEO CONTROLLER
512

FIG. 5

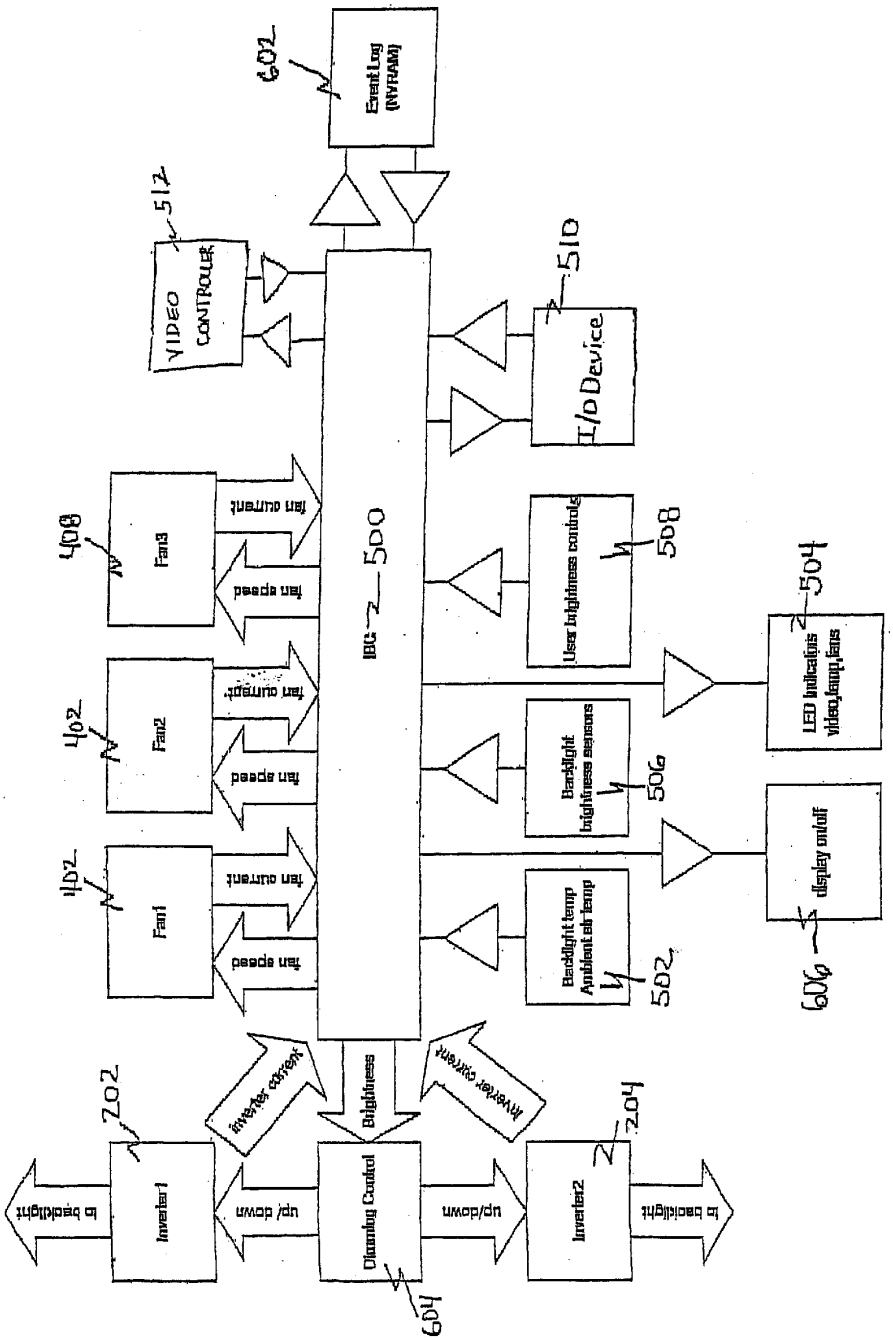
IBC Process Flowchart
Event Log (NVRAM)
602
VIDEO CONTROLLER
512
I/O Device
510
Fan3
408
Fan2
402
Fan1
402
fan current
fan speed
IBC
500
User brightness controls
508
Backlight brightness sensors
506
Backlight temp Ambient air temp
502
LED indications video,temp,fans
504
display on/off
606
inverter current
Brightness
Inverter current
Inverter1
202
Inverter2
204
up/down
Dimming Control
604
to backlight

FIG. 6

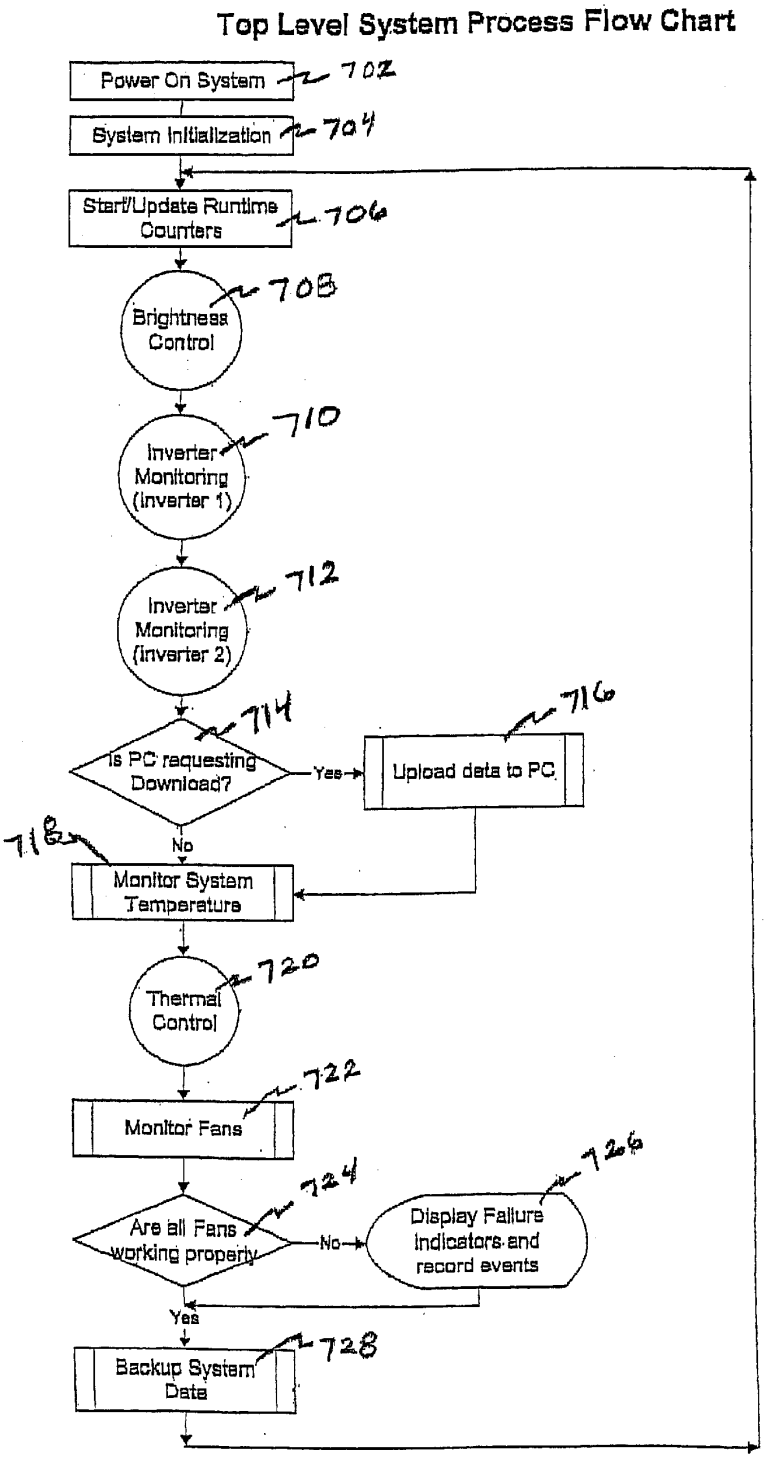
Top Level System Process Flow Chart
Power On System
702
System Initialization
704
Start/Update Runtime Counters
706
Brightness Control
708
Inverter Monitoring (inverter 1)
710
Inverter Monitoring (inverter 2)
712
Is PC requesting Download?
714
Yes
Upload data to PC
716
No
718
Monitor System Temperature
Thermal Control
720
Monitor Fans
722
Are all Fans working properly
724
No
Display Failure indicators and record events
726
Yes
Backup System Data
728

FIG. 7A

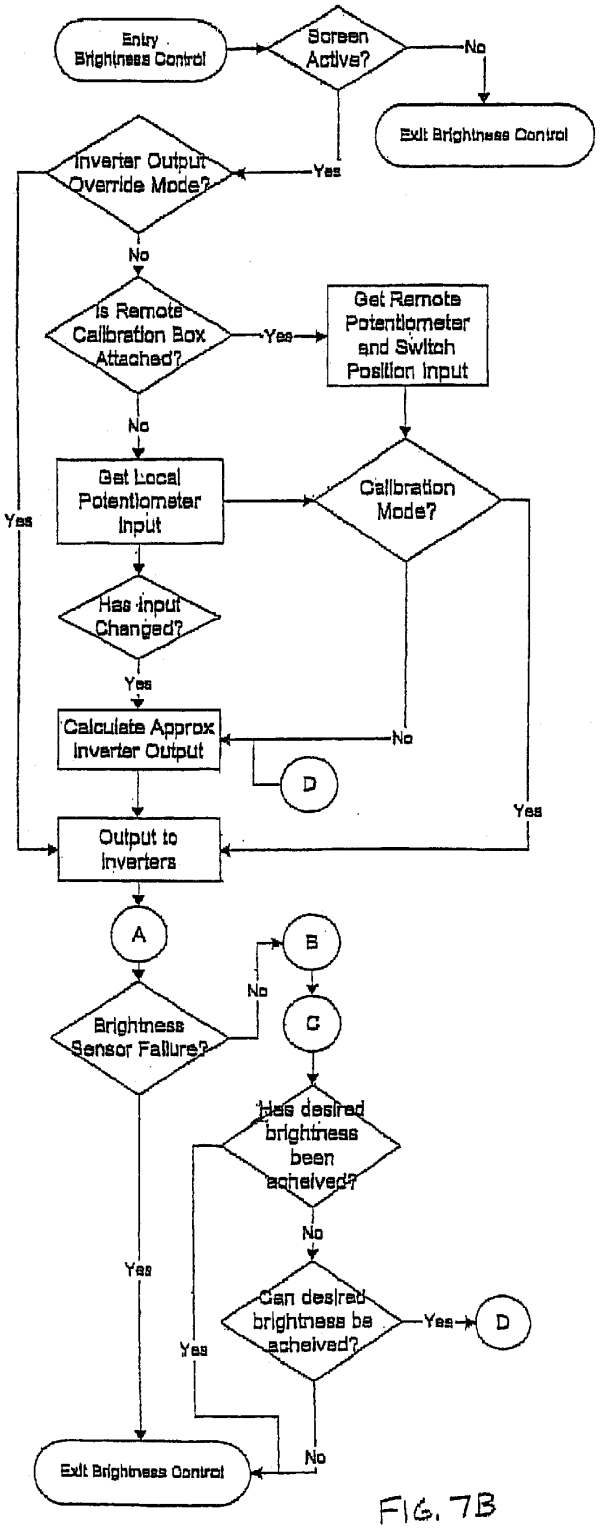
Entry Brightness Control
Screen Active?
No
Exit Brightness Control
Yes
Inverter Output Override Mode?
No
Is Remote Calibration Box Attached?
Yes
Get Remote Potentiometer and Switch Position Input
No
Get Local Potentiometer Input
Calibration Mode?
Yes
Has Input Changed?
Yes
Calculate Approx Inverter Output
No
D
Yes
Output to Inverters
A
B
No
C
Brightness Sensor Failure?
Has desired brightness been acheived?
No
Yes
Can desired brightness be acheived?
Yes
D
Yes
No
Exit Brightness Control

FIG. 7B

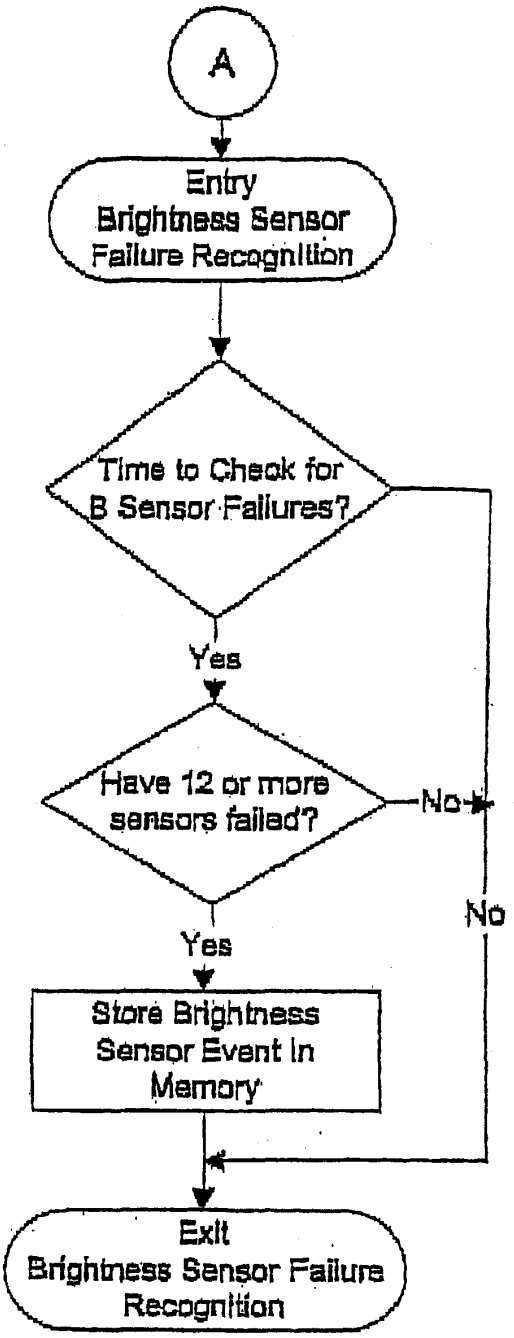
A
Entry
Brightness Sensor
Failure Recognition
Time to Check for
B Sensor Failures?
Yes
Have 12 or more
sensors failed?
No
No
Yes
Store Brightness
Sensor Event in
Memory
Exit
Brightness Sensor Failure
Recognition

FIG. 7C

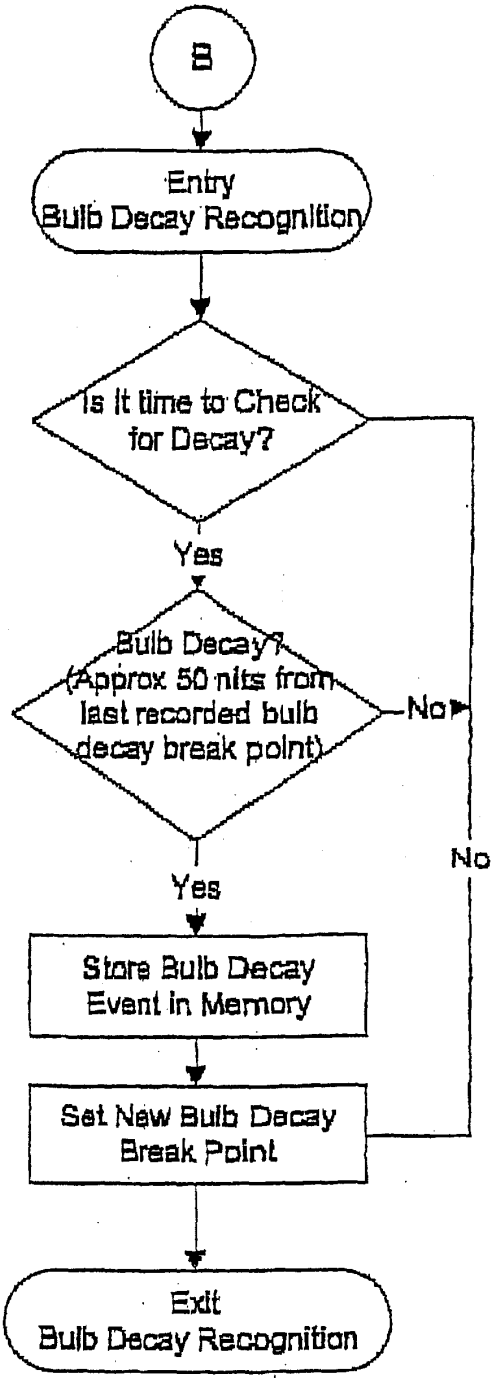
B
Entry
Bulb Decay Recognition
Is it time to Check for Decay?
Yes
Bulb Decay? (Approx 50 nits from last recorded bulb decay break point)
No
No
Yes
Store Bulb Decay Event in Memory
Set New Bulb Decay Break Point
Exit
Bulb Decay Recognition

FIG. 7D

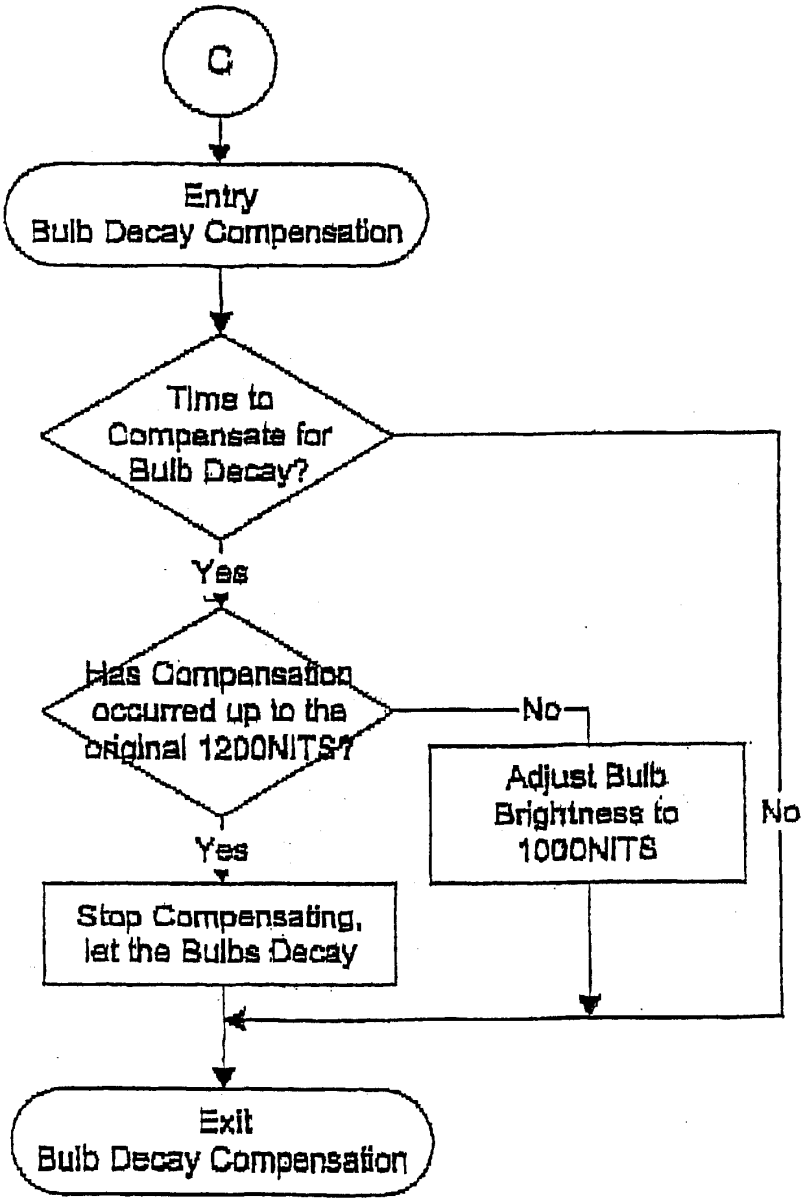
C
Entry
Bulb Decay Compensation
Time to Compensate for Bulb Decay?
Yes
No
Has Compensation occurred up to the original 1200NITS?
No
Adjust Bulb Brightness to 1000NITS
Yes
Stop Compensating, let the Bulbs Decay
Exit
Bulb Decay Compensation

FIG. 7E

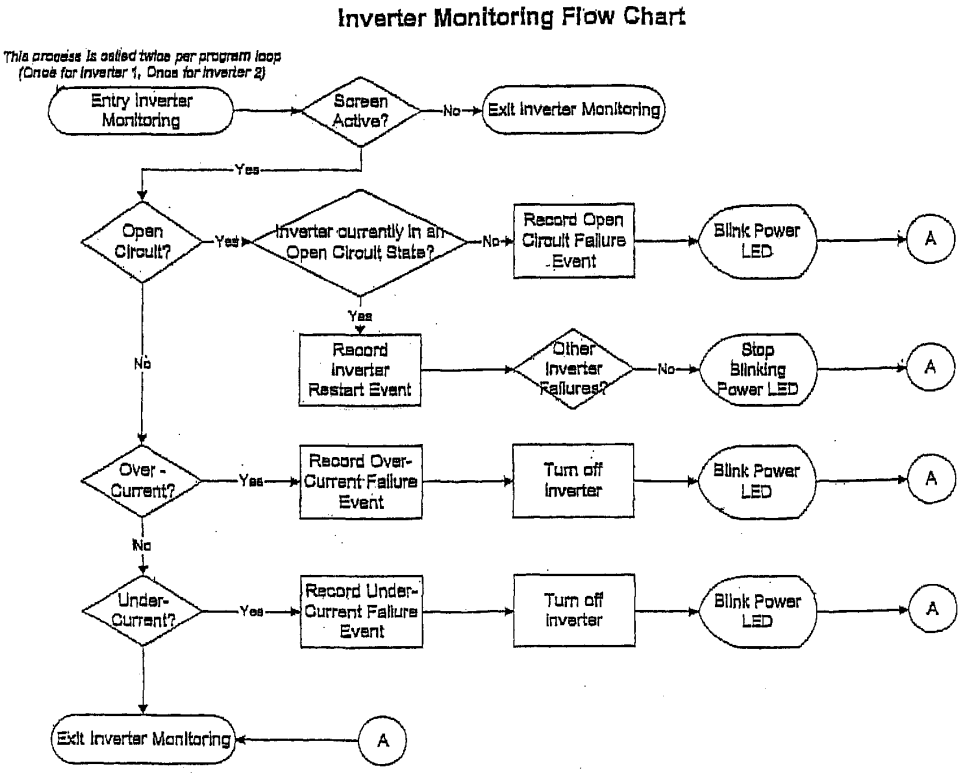
Inverter Monitoring Flow Chart
This process is called twice per program loop
(Once for inverter 1, Once for inverter 2)
Entry Inverter Monitoring
Screen Active?
No
Exit Inverter Monitoring
Yes
Open Circuit?
Yes
Inverter currently in an Open Circuit State?
No
Record Open Circuit Failure Event
Blink Power LED
A
Yes
Record Inverter Restart Event
Other Inverter Failures?
No
Stop Blinking Power LED
A
No
Over - Current?
Yes
Record Over-Current Failure Event
Turn off Inverter
Blink Power LED
A
No
Under-Current?
Yes
Record Under-Current Failure Event
Turn off Inverter
Blink Power LED
A
Exit Inverter Monitoring
A

FIG. 7F

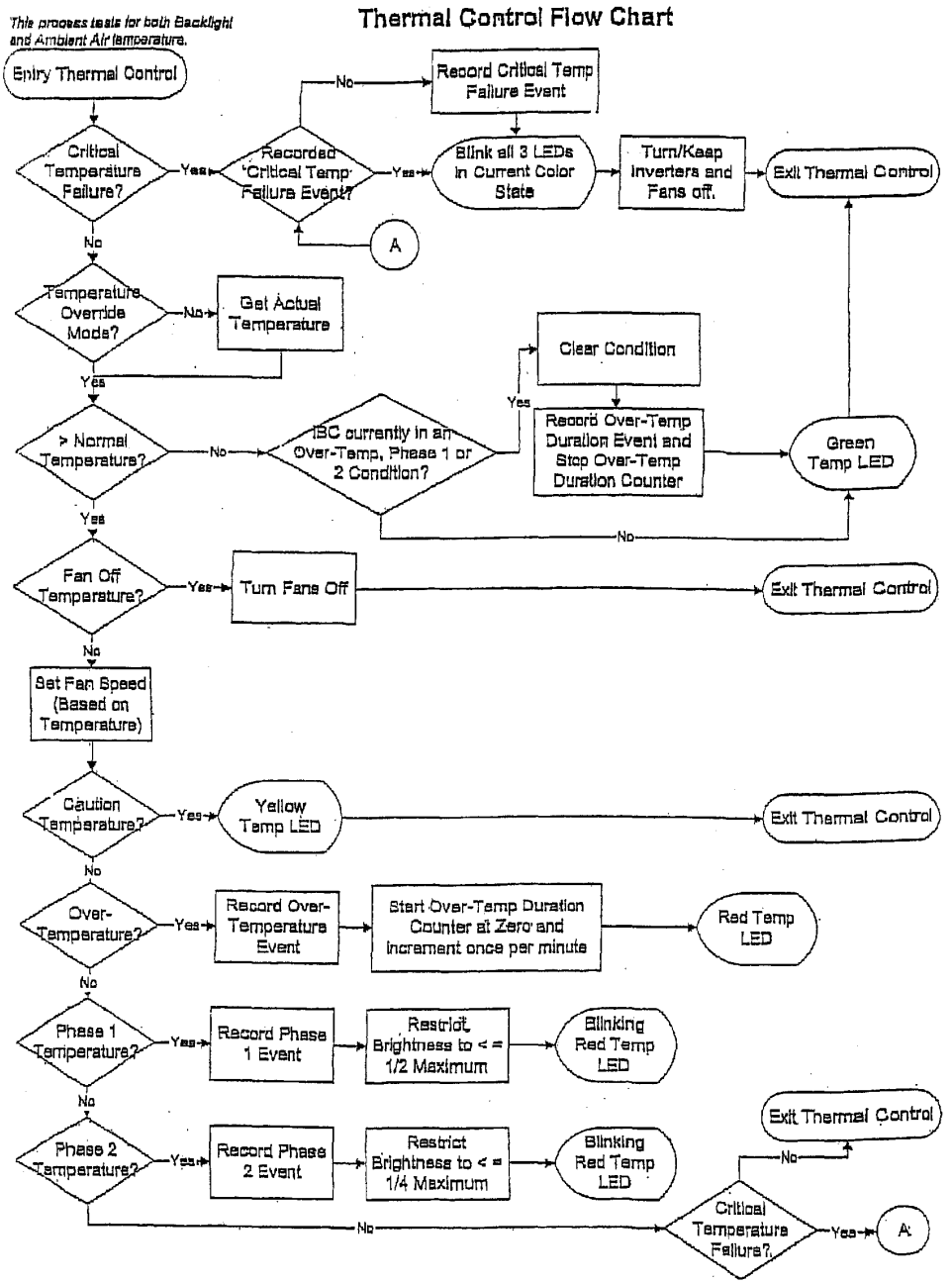
Thermal Control Flow Chart
This process tests for both Backlight and Ambient Air temperature.
Entry Thermal Control
Critical Temperature Failure?
Yes
No
Recorded 'Critical Temp' Failure Event?
Yes
No
Record Critical Temp Failure Event
Blink all 3 LEDs in Current Color State
Turn/Keep Inverters and Fans off.
Exit Thermal Control
A
Temperature Override Mode?
No
Yes
Get Actual Temperature
> Normal Temperature?
No
Yes
IBC currently in an Over-Temp, Phase 1 or 2 Condition?
Yes
No
Clear Condition
Record Over-Temp Duration Event and Stop Over-Temp Duration Counter
Green Temp LED
Fan Off Temperature?
Yes
No
Turn Fans Off
Exit Thermal Control
Set Fan Speed (Based on Temperature)
Caution Temperature?
Yes
No
Yellow Temp LED
Exit Thermal Control
Over-Temperature?
Yes
No
Record Over-Temperature Event
Start Over-Temp Duration Counter at Zero and Increment once per minute
Red Temp LED
Phase 1 Temperature?
Yes
No
Record Phase 1 Event
Restrict Brightness to < = 1/2 Maximum
Blinking Red Temp LED
Phase 2 Temperature?
Yes
No
Record Phase 2 Event
Restrict Brightness to < = 1/4 Maximum
Blinking Red Temp LED
Critical Temperature Failure?
Yes
No
A
Exit Thermal Control

FIG 7G

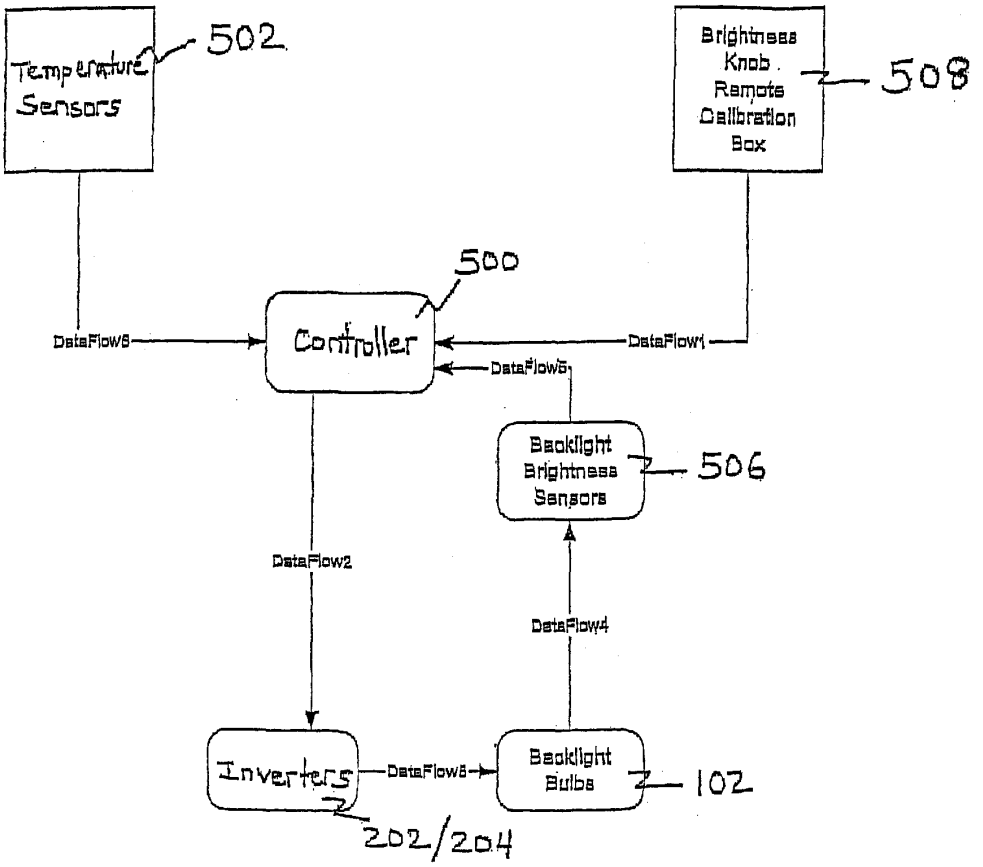
Temperature Sensors
502
Brightness Knob Remote Calibration Box
508
500
Controller
DataFlow6
DataFlow1
DataFlow5
Backlight Brightness Sensors
506
DataFlow2
DataFlow4
Inverters
DataFlow3
Backlight Bulbs
102
202/204

FIG. 8

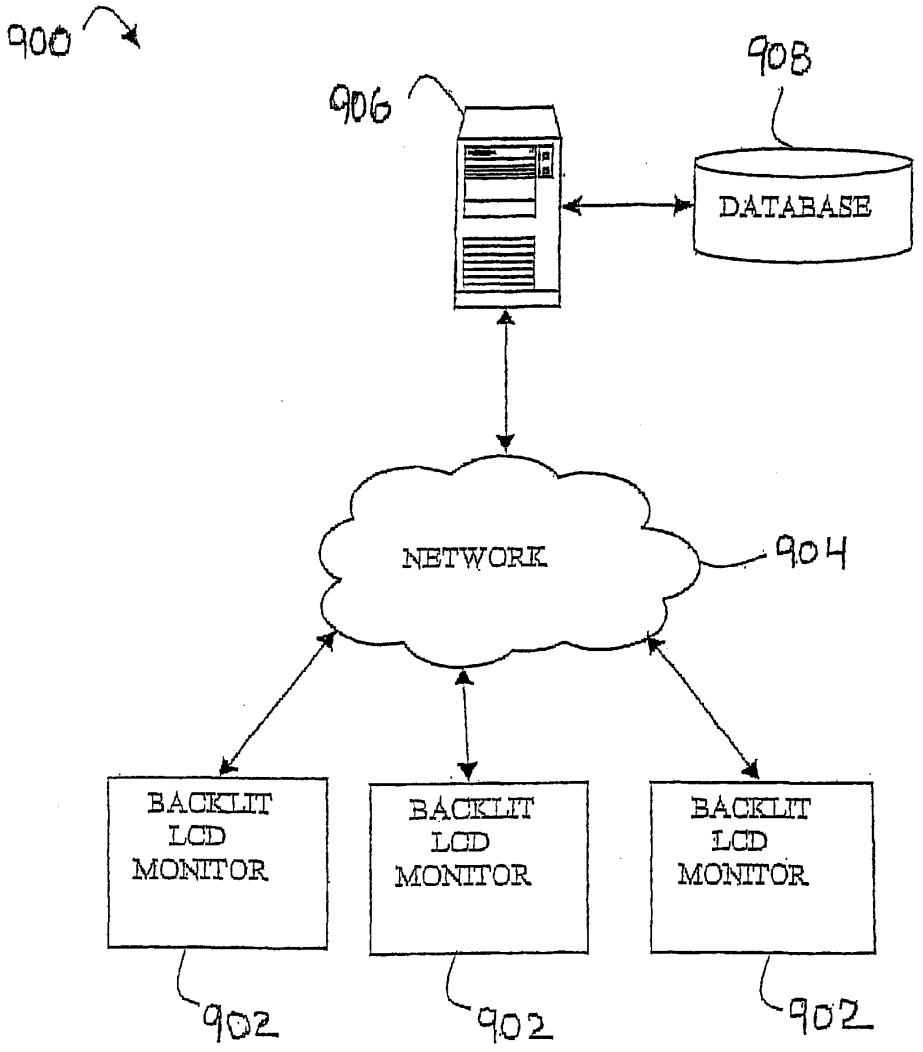
900
906
908
DATABASE
NETWORK
904
BACKLIT LCD MONITOR
BACKLIT LCD MONITOR
BACKLIT LCD MONITOR
902
902
902

FIG. 9

BACKLIT LCD MONITOR

CROSS-REFERENCE TO RELATED APPLICATIONS

This application claims the benefit of U.S. provisional patent application Ser. No. 60/270,848, filed Feb. 23, 2001, the entire contents of which are incorporated herein by reference.

BACKGROUND OF THE INVENTION

The invention relates to backlit liquid crystal display (LCD) monitors. Backlit LCD monitors are often used in applications where ambient conditions such as sunlight can negatively affect the ability to view the display. Such applications include air traffic control displays viewed by air traffic controllers sitting at computer screens located in an airport control tower. Backlit LCD monitors are also useful in maritime applications (barges, aircraft carriers and tugs), making it possible to execute and interpret output from shipboard instrumentation such as navigation, targeting, IFF and weapons control from a monitor mounted on the vessel, even if the monitor is subject to extreme lighting conditions such as bright sunlight or total darkness. Further applications can include automatic teller machines (ATMs), kiosks and any other applications where the ability to view the computer screen could be adversely affected by ambient conditions. Backlit LCD monitors can provide increased brightness in order to compensate for adverse conditions such as bright sunlight and total darkness and high glare.

SUMMARY OF THE INVENTION

An exemplary embodiment of the invention is a backlit liquid crystal display (LCD) monitor comprising a backlight assembly, a cooling assembly, a rear cover assembly and a controller. The backlight assembly has opposing top and bottom surfaces and the bottom surface includes a plurality of fluorescent bulbs with parallel bulb axes and two or more inverters to drive the bulbs. The cooling assembly has opposing top and bottom surfaces and the top surface of the cooling assembly is mounted on the bottom surface of the backlight assembly to form a closed air space around the bulbs. The cooling assembly includes: a light sensor on the top surface of the cooling assembly and the light sensor has an axis that is perpendicular to the bulb axes of the fluorescent bulbs, a temperature sensor, a heat sink on the bottom surface of the cooling assembly, and an air inlet and an air outlet in fluid communication with the closed air space and positioned for causing air to flow across the bulbs. The rear cover assembly is placed over the bottom surface of the cooling assembly and includes: an exhaust fan in fluid communication with the air outlet, a cover inlet in fluid communication with the air inlet, a filter placed over the cover inlet and a fan positioned to draw air towards the heat sink. The controller is electrically connected to the sensor, inverters and fans.

Another embodiment of the invention is a method of controlling a backlit liquid crystal display monitor. The method comprises receiving target data including target heat sink temperature, target backlight chamber temperature and target bulb luminance. The method also comprises receiving actual data including actual heat sink temperature, actual backlight chamber temperature, actual bulb luminance, heat sink fan status and current, exhaust fan status and current, and inverter status and current. The method further comprises adjusting the monitor settings in response to the target data and the actual data. The adjusting includes setting input current to the inverter, setting the heat sink fan speed, and setting the exhaust fan speed. The method further comprises sending a notification in response to the target data, the actual data and said adjusting.

The above described and other features are exemplified by the following figures and detailed description.

BRIEF DESCRIPTION OF THE DRAWINGS

Referring now to the figures, which are exemplary embodiments, and wherein the like elements are numbered alike:

FIG. **1** is a perspective view of the backlight assembly portion of a backlit LCD monitor;

FIG. **2** depicts interlaced bulbs and inverters in an embodiment of the invention;

FIG. **3** is an exploded, perspective view of the cooling assembly and LCD screen;

FIG. **4**A is an exploded, perspective view of the rear cover assembly of the backlit LCD monitor;

FIG. **4**B is cross-sectional view of backlight assembly, cooling assembly and rear cover assembly;

FIG. **5** is a block diagram of an exemplary backlit LCD monitor control system;

FIG. **6** is a block diagram of the data flow in an exemplary backlit LCD monitor control system;

FIG. **7**A is a flowchart of a process performed by an exemplary backlit LCD monitor control system;

FIG. **7**B is a flowchart of an exemplary brightness control process;

FIG. **7**C is a flowchart of an exemplary brightness sensor failure recognition process;

FIG. **7**D is a flowchart of an exemplary bulb decay recognition process;

FIG. **7**E is a flowchart of an exemplary bulb decay compensation process;

FIG. **7**F is a flowchart of an exemplary inverter monitoring process;

FIG. **7**G is a flowchart of an exemplary thermal control process;

FIG. **8** is a flowchart of a bulb control process performed by a backlit LCD monitor controller; and

FIG. **9** is a system diagram of an exemplary embodiment of the invention.

DETAILED DESCRIPTION OF THE INVENTION

An exemplary embodiment of the invention is a backlit liquid crystal display (LCD) monitor having an enhanced cooling system that can allow the monitor to operate at higher ambient temperatures and can promote bulb life. Another embodiment of the invention includes a backlight controller that controls operation of the backlit LCD monitor, monitors faults and performs replace before fail analysis. FIG. **1** is a perspective view of an exemplary embodiment of the backlight assembly **100** of a backlit LCD monitor. Shown in FIG. **1** is a backlight assembly **100** that includes a series of fluorescent bulbs **102** having parallel longitudinal axes. The bulbs **102** provide the backlight source used in the backlit LCD monitor. In as exemplary embodiment of the present invention, the bulbs **102** are driven by two inverters to generate a backlight luminance of 1000 nits and the backlights have a maximum capability of providing over 1400 nits of luminance. In an exemplary

embodiment, 31 cold cathode flourescent tubes (CCFT) are aligned horizontally in parallel, running from the left to the right of the LCD. The CCFTs are housed in a rugged aluminum enclosure that is lined with a highly reflective, flame retardant material that is designed to harness all of the light that is generated by the CCFTs and focus it towards the LCD.

FIG. **2** illustrates an exemplary embodiment of how the bulbs **102** are driven electrically. The backlit LCD monitor includes two inverters **202**/**204** for driving the bulbs **102**. In a preferred embodiment, thirty-one bulbs **102** are used and the bulbs are interlaced between the two inverters **202**/**204**. Every other bulb **102** is connected to the same inverter **202**/**204** so that, in the example shown in FIG. **2**, odd numbered bulbs **102** are coupled to inverter **202** and even numbered bulbs **102** are coupled to inverter **204**. If one inverter **202**/**204** fails, sufficient backlight is generated across the entire display area by the bulbs **102** coupled to the working inverter **202**/**204**.

FIG. **3** is an exploded, perspective view of the cooling assembly **300** coupled to the backlight assembly **100** and an LCD screen **10**. Shown in FIG. **3** is a cooling assembly **300** which is mounted on the backside of the backlight assembly **100** and comprises a combination of passive and active cooling techniques. Light from the backlight assembly **100** is emitted to an LCD screen **10** opposite the cooling assembly **300**. The cooling assembly **300** includes a heat sink **302**, which in an exemplary embodiment comprises a finned aluminum plate, for conducting heat away from bulbs **102**. The heat sink **302** lies on the side of the cooling assembly **300** that faces away from the backlight assembly **100**. In an exemplary embodiment, the heat sink is constructed from a milled block of aluminum or aluminum extrusion to optimize the thermal coefficient. Heat that is generated by the backlights is dissipated through the heat sink fins that provide optimized surface area.

In an exemplary embodiment, the cooling assembly **300** also includes an air inlet **304** and two air outlets **306**. Bulbs **102** are positioned in a closed air space, also referred to as the backlight chamber, provided between backlight assembly **100** and cooling assembly **300**. A gasket could be used to connect the backlight assembly **100** and the cooling assembly **300** in order to create the closed air space. The air inlet **304** and air outlets **306** are in fluid communication with this internal closed air space. Also shown in FIG. **3** is a light/temperature sensor assembly **308** which includes a number of light sensors to monitor the light output across bulbs **102** and a temperature sensor to measure the temperature of the backlight chamber. The light sensor axes are positioned perpendicular to the axes of the bulbs **102**. Signals from the light sensors are provided to a controller for monitoring as described in further detail herein. Also shown in FIG. **3** is a temperature sensor **310** on the back of the cooling assembly **300** that faces away from the backlight assembly **100**. This temperature sensor measures the temperature of the air near the heat sink **302** in the electronics chamber.

FIG. **4**A is an exploded, perspective view of an exemplary embodiment of the rear cover portion of the backlit LCD monitor. Shown in FIG. **4**A is a rear cover assembly **400** which is placed over the cooling assembly **300**. The rear cover assembly **400** includes exhaust fans **402** in fluid communication with the air outlets **306**. Exhaust fans **402** direct air away from the rear cover assembly **400** as indicated by the arrows in FIG. **4**A. A filter (e.g. a HEPA filter) **404** is placed over a cover inlet **406**. In another embodiment, some other dust reducing device such as a gas purging system or another form of dust free air supply may be used in place of the filter. The cover inlet **406** is in fluid communication with the air inlet **304** on the cooling assembly **300**. During operation, the exhaust fans **402** draw air through the filter **404**, through the air inlet **304**, over the bulbs **102** and out through the air outlets **306**. This reduces the interior temperature of the backlit LCD monitor and allows the bulbs **102** to operate at a higher current and/or in higher ambient temperature conditions. Another fan **408** in the rear cover assembly **400** directs air into the space between the rear cover assembly **400** and the cooling assembly **300**, hereafter referred to as the "electronics chamber", as indicated by the arrow in FIG. **4**A. This air is directed through an opening in the rear cover assembly **400** and onto the heat sink **302**. This further reduces the interior temperature of the electronics chamber of the backlit LCD monitor.

FIG. **4**B is a cross-sectional view depicting the backlight assembly **100**, the cooling assembly **300** and the rear cover assembly **400**. The front of the backlight assembly **100** may include a diffuser **101** so that light emitted to the LCD screen **10** is uniform. As noted above, a gasket **90** may be used to form an airtight chamber encompassing bulbs **102** between the backlight assembly **100** and the cooling assembly **300**. Fan **402** draws air over bulbs **102** through filter **404**. In addition, fan **408** directs air at the heat sink **302**. As described in further detail herein, the fans are controlled by a controller in response to sensed temperature.

FIG. **5** is a high level block diagram of an exemplary backlit LCD monitor control system. In an exemplary embodiment, the system includes a microprocessor based controller **500** or application specific integrated circuit (ASIC) that is designed to optimize the performance of an LCD monitor by monitoring, controlling and recording the performance of each of the monitor subsystems. One function of the controller **500** is to control the brightness of the bulbs **102** through the inverters **202**/**204**. Light sensors **506**, part of the sensor assembly **308** mounted on the side of the cooling assembly **300** facing the backlight assembly **100**, monitor the brightness of the bulbs **102** and provide brightness signals to the controller **500**. Multiple light sensors **506** may be used, and the signals may be averaged to provide an average brightness. Based on the sensed brightness, the controller **500** can increase or decrease the current to the inverters **202**/**204** in order to increase or decrease the output of the bulbs **102**.

In an exemplary embodiment, the bulbs **102** are driven to produce 1000 nits of luminance but have a capability of generating 1400 nits of luminance. As the bulbs **102** age, it takes more current to generate the 1000 nits of luminance. Once the maximum current is applied to the bulbs **102** and the luminance drops below some threshold (e.g., 950 nits), warnings to the user may be generated through the light emitting diode (LED) **504**. Such warnings may be repeated at regular intervals (e.g., a warning at every 50 nits decrease). Fault data associated with the drop in luminance may be stored in memory associated with the controller (e.g., RAM, NVRAM). In addition, fault data may be communicated to a local or remote operator by sending data through a network or other data communications connection that can be provided by the I/O device **510**. Event data, fault data and alert messages may be sent and instructions may be received by the controller **500** through the I/O device **510**.

In a preferred embodiment, operators are permitted to vary the brightness of the LCD monitor via a locally mounted potentiometer or though an external remote brightness control box **508** and/or via I/O device **510** as depicted

in FIG. **5**. The brightness control device may in communication with the controller in an electrical fashion and it may in communication via a wireless connection such as infrared. The controller **500** monitors a remote brightness control interface to determine if a remote brightness control box **508** is present. If the remote brightness control box **508** is detected, dimming control (priority) is passed to the remote brightness control box **508** thereby disabling the local potentiometer controls. The local potentiometer is the system's default dimming control. In an exemplary embodiment, the remote brightness control box **508** comprises a multi-position switch and a potentiometer. The switch allows the selection of a series of pre-defined brightness ranges as well as manual override. Examples of some ranges, where the nits are measured at the surface of the LCD, include: nighttime mode (e.g. 0.5 to 200 nits); normal mode (e.g. 201 to 700 nits); sunlight mode (e.g. 701 to 1000 nits); and manual mode (e.g. full dimming control). The potentiometer in the remote brightness control box **508** varies brightness within the selected range.

The remote brightness control box **508** is used as part of a closed loop control method including the brightness sensors **506**, the controller **500** and the remote brightness control box **508**. The remote brightness control box **508** provides a signal (e.g., voltage) to the controller **500**. The controller then converts this signal to a brightness level using known techniques (e.g., mathematical equation, look-up table, etc.). The controller **500** then monitors the bulb brightness through brightness sensors **506** and adjusts bulb current to maintain the brightness at the user-defined level.

By using a look-up table to define brightness settings, the controller **500** can be updated to accommodate age of the display or application of the display. For example, if the display is moved from bridge of ship to the engine room, the tables defining brightness levels in controller **500** may be updated (e.g., through I/O device **510**) to set new brightness levels for this environment.

The controller **500** continuously monitors the inverters **202**/**204** for over-current, under-current and open circuit conditions. As described above, in reference to FIG. **2**, an exemplary embodiment includes two inverters **202**/**204** and each inverter **202**/**204** drives one half of the backlight bulbs **102**, in an interleaved or alternating pattern. In the event that a single inverter **202**/**204** experiences a critical failure, only that portion of the bulbs **102** will be disabled, rendering the display at partial brightness, but completely operational. This is regarded as a soft failure. Since the remaining bulbs **102** will remain unaffected by a singular failure, the LCD display will maintain a uniform brightness across its entire surface. If an over-current, undercurrent or open circuit condition is detected, the controller **500** records these faults into non-volatile memory and visually alerts operators via the status LED **504**. In the event of an over-current or under-current condition, the controller **500** will automatically shut down the affected inverter **202**/**204**. In an exemplary embodiment with two inverters **202**/**204**, the target brightness is cut in half if an inverter **202**/**204** is shut down. The controller **500** can also send an alert message to a remote or local operator using a network connection provided by the I/O device **510**. In addition, the controller **500** can receive instructions from an operator through the I/O device **510**.

The output (or brightness) of the bulbs **102** can be affected by temperature and bulb decay. In an exemplary embodiment, the controller **500** can limit the maximum operator-controlled brightness to a programmed value well below the maximum bulb brightness. This can aid in extending the life of the bulbs **102** and can allow the controller **500** to maintain the programmed maximum brightness for extended periods of time. The light sensors **506** are continuously monitored for proper function, and in the event of a single or multi-modal failure(s), the failure is recorded to non-volatile memory and future readings from the failed sensor **506** are disregarded until the sensor **506** is repaired. Bulb condition may be determined based on present bulb current and/or present bulb temperature. Also, cumulative bulb current may be monitored to determine bulb condition and whether a failure is imminent. For example, if the cumulative bulb current for a bulb has exceeded a threshold, this indicates that a bulb failure is imminent.

Failure data and operator alerts can be sent to a remote or local operator through a network connection provided by the I/O device **510**. When the bulbs **102** are no longer able to sustain the maximum brightness established by the controller **500**, the controller **500** records the maximum brightness into non-volatile memory. This maximum brightness data recorded can be recorded at programmable intervals. This information can assist in determining the need to replace the backlight bulbs **102** before a critical failure has been experienced.

As shown in the exemplary embodiment depicted in FIG. **5**, the controller **500** also monitors the temperature in the backlit LCD monitor through temperature sensors **502**. Multiple temperature sensors **502** may be used in the backlit LCD monitor. For example, one temperature sensor **502** may monitor the temperature in the electronics chamber and another temperature sensor **502** may monitor ambient temperature in the closed air space, or backlight chamber, between the backlight assembly **100** and the cooling assembly **300**. Exceeded temperature limits can be detected and warnings issued to the user through the LED **504**. A fault may be stored in memory associated with the controller (e.g., RAM, NVRAM) or may be connected to a real-time monitoring or data gathering system or computer.

The controller **500** activates the fans **402**/**408** when the reported temperature from the temperature sensors **502** exceeds a minimum temperature (e.g., 20° C.) programmed into the controller **500**. This allows the bulbs to attain optimum minimum bulb wall temperature (MBWT). Once activated by the controller **500**, the fan speed is determined by the internal temperature sensed by the temperature sensors **502**. A programmable maximum operating temperature can be set in the controller **500**. In an exemplary embodiment, if either of the temperature readings is within five degrees of the maximum operating temperature, the event is recorded and date/time stamped into non-volatile memory and a visual indicator is provided on the LED **504**. If the temperature achieves, or exceeds, the maximum recommended operating temperature, an event is recorded and date/time stamped, and a different visual indicator is provided on the LED **504**. The duration of the over-temperature condition can be recorded for warranty and troubleshooting purposes. An identical process can be performed for an under-temperature condition where the minimum operating temperature is programmable and can be set by an operator. This allows the bulb temperature to remain in a preferred temperature range often referred to as a "sweet spot." It is known that certain bulbs operate more efficiently at an optimum MBWT. The control techniques used in the invention allow the bulb temperature to remain in this range.

If the over-temperature condition persists, the controller **500** executes a soft failure that begins by reducing the inverter output in steps (e.g. by 50%, then by another 50%) and it may result in one of the inverters **202**/**204** being shut

off completely if reducing inverter output does not cure the over-temperature condition. When the temperature returns to a safe operating range, the controller **500** will return the inverters **202**/**204** to normal operation. If the temperature does not return to a safe operating range then the monitor will be shut-down completely while still allowing log data to be downloaded through the I/O device **510**. In addition, the controller **500** records the maximum and minimum temperature extremes, experienced while under power on the non-volatile memory or monitoring computer. Alert messages can be sent from the controller **500** and instructions can be received by the controller **500** through a network connection implemented by the I/O device **510**.

As depicted in FIG. **5**, the fans **402**/**408** are monitored by the controller **500**. Fan failure can be detected by the controller **500** and a warning issued to the user through the LED **504**. An anomaly in the current waveform of a fan **402**/**408** may indicate a fan failure or fault and the fault may be stored in the memory associated with the controller.

In an exemplary embodiment, a personal computer is used to execute software that predicts failures and determines the need for preventive maintenance using fault and event data that has been logged in the memory associated with the controller **500**. In addition, a personal computer can be used to control the backlit LCD monitor through a diagnostic mode in which backlit LCD monitor parameters (e.g., bulb brightness, temperature) can be monitored and controlled from a personal computer.

The I/O device **510** allows the controller **500** to send data to an external device, such as a personal computer, for analysis and to receive commands from the external device. In addition to receiving commands from an external device, software upgrades to the controller can also be received from an external device. An embodiment of the present invention provides a secure, password protected method of performing software upgrades. In an exemplary embodiment, the external device is a personal computer that can use the I/O device or communication controller **510** to access fault and event data in the log stored in the memory associated with the controller **500**. A video controller **512** is also connected to the controller **500**. In addition to a personal computer, any external device known in the art that can execute computer software can be used with the present invention. The personal computer can execute software to perform predictive fault analysis using the log data and historical statistical data to determine if failure of the backlit LCD monitor is imminent and recommend appropriate service. For example, bulb current and brightness can be recorded at pre-selected intervals. This data, or an aggregate of this data for several monitors, can be used to predict failures and replacement timeframes. Also, the personal computer can issue commands to the controller **500** through I/O device **510** to perform a variety of actions such as a command to modify brightness. The I/O device **510** may be a serial port (e.g., RS232 port), an infrared data association (IrDA) port, a communications controller or any other communications interface known in the art. In an exemplary embodiment, the I/O device **510** allows the controller to send and receive data over a communications network.

In an exemplary embodiment, the controller **500** date/time stamps and records all of the failures and events in non-volatile memory. The log data stored in non-volatile memory can include: the conditions at failure (e.g., temperatures, fan speeds, brightness), the duration of the failure and the action taken in response to the failure. In addition to fault and event data, the controller **500** can maintain data that includes: date of manufacture of the monitor, serial number of the monitor, component serial numbers, installation dates, hours in use, and warranty expiration dates, system alias, and non-volatile memory available. In an exemplary embodiment, the components include: AC power supply, LCD video controller, brightness sensor array module, three cooling fans, inverter module, DC/DC power supply, backlight assembly, controller **500**, and LCD display. The recorded data in the controller can be retrieved for viewing and additional analysis through the I/O device **510**.

In an exemplary embodiment, an operator can request, through the I/O device **510**, a snapshot of the current conditions in the monitor. The data sent to the operator can include: failure data, current temperatures, current fan speeds, current brightness, run time for the monitor and for each component, current status of each component, the minimum and maximum temperatures, the amount of controller memory currently in use and the software version being executed by the controller.

In an exemplary embodiment, the LED **504** depicts the status of the fans **402**/**408**, the temperature, the power and the inverters **202**/**204**. The fan status LED can be set to "green" to indicate that the fan status is "good" and set to "red" if a fan failure has occurred. The temperature status LED can be set to "green" if the temperature is a "safe temperature", set to "yellow" if the temperature is a "caution temperature", and set to "red" if the temperature is an "over temperature." Similarly, the power status LED can be set to "off" to indicate "no power", "green" to indicate "power good", "yellow" to indicate "video standby", and "red" to indicate "no video controller power." All of the LEDs can be programmed to blink or flash when an inverter failure is detected or an inverter **202**/**204** is shut off by the controller **500** due to an over-temperature condition. The LEDs indicate an overall status and more detailed data can be recorded in log contained in the memory associated with the controller **500**.

FIG. **6** is a block diagram of the data flow in an exemplary backlit LCD monitor control system. The controller **500** receives data that could include fan current data from the fans **402**/**408**, log data from the memory **602** associated with the controller **500**, data from the I/O device **510**, data from the video controller **512**, user input brightness control **508** data, brightness data from the brightness sensors **506**, temperature data from the temperature sensors **502**, and inverter current data from the inverters **202**. The controller **500** can use this data to send instructions to the fans **402** to specify and set the speeds of the fans. The controller **500** can also use the data it receives to set the brightness of the bulbs **102** by setting the dimming control **604** which in response will turn the inverter **202**/**204** current up or down. The controller **500** can also use the data it receives to determine when and what to write to the log **602**, to determine data to send to the I/O device **510**, to determine how the lights on the LED indicators **504** should be set, and to turn the display on or off **606**.

FIG. **7A** is a flowchart of an exemplary control process that can be executed by the controller **500**. The flowchart illustrates that the controller **500** monitors the status of several elements (e.g., bulbs, inverters) and stores a record of the status and of any failures on the log. The log records can then be downloaded to a personal computer, or other external device or communicated, real-time, to a monitoring computer for predictive fault analysis. Operators can also be alerted to faults through the LEDs **604** on the backlit LCD monitor. The process begins at step **702** when the power to the monitor is turned on. Next, at step **704** system initialization occurs which can include steps such as setting the

inverters **202**/**204** and displaying an initial screen. Next, a loop is started at step **706** that goes through step **728** and is repeated until the monitor is powered off. At step **706**, the runtime counters are updated. The first time the loop is executed the runtime counters are started and with each subsequent execution of the loop the runtime counters are updated.

At step **708** brightness control is performed. Step **708** can be performed using a process such as that shown in FIG. **7**B. The process depicted in FIG. **7**B begins by determining whether a remote calibration box, a local potentiometer, or an override should be used to calculate inverter output. Once this output has been sent to the inverters, a brightness sensor failure recognition process, such as the one depicted in FIG. **7**C is performed. As shown in FIG. **7**C a brightness sensor event is stored in memory if it is time to check for brightness sensor failures and twelve or more sensors have failed. Processing continues back on FIG. **7**B by performing a bulb decay process, such as the one shown in FIG. **7**D, and a bulb decay compensation process, such as the one shown in FIG. **7**E, if no brightness sensor failures have occurred. The bulb decay process shown in FIG. **7**D includes storing a bulb decay event in memory and setting a new bulb decay break point in the event that bulb decay if has occurred. The bulb decay compensation process shown in FIG. **7**E includes adjusting the bulb brightness control up to an original limit (here 1200 nits) and then letting the bulbs decay once the original limit has been reached.

Next, step **710** is executed to perform inverter monitoring for the first inverter. Step **710** can be performed using a process such as that shown in FIG. **7**F. The inverter monitoring process checks for an open circuit, for over-current and for under-current conditions. If an open circuit condition exists and the inverter is not currently in an open circuit state, the failure event if logged and the power LED is set to blink. If the inverter is in an over-current state then the failure is recorded, the inverter is turned off and the power LED is set to blink. Similarly, when an under-current state exists, the failure is recorded, the inverter is turned off and the power LED is set to blink. Processing then continues with step **712** in FIG. **7**A.

Step **712** is executed to perform inverter monitoring for the second inverter. The same process described in reference to step **710** is performed. If there are more than two inverters this inverter monitoring process is performed for each subsequent inverter. Next, at step **714** it is determined whether the PC, or I/O device **510** is requesting a download. If a download is being requested, step **716** is performed and the data from the event log is downloaded to the PC or I/O device **510**.

Next, step **718** is performed to monitor the system temperature. Data from the temperature sensors **502** is collected by the controller **500**. At step **720** the thermal control process is performed. Step **720** could be performed using a process such as the one depicted in FIG. **7**G. As shown in FIG. **7**G, the thermal control flow process includes checking for a critical temperature failure and if one exists, recording the critical temperature failure event and setting all three LEDs to blink. The actual temperature is then determined and if it is greater than normal, the fan speed is set. The temperature is then compared to various programmable temperature levels to determine if a caution temperature, over-temperature, phase 1 temperature, phase 2 temperature, or critical temperature failure condition exists. If the temperature is at a caution temperature level, the yellow temperature LED is lit. If the temperature is at an over-temperature, the event is recorded, a counter is started, and the red temperature LED is lit. Phase 1 temperature and phase 2 temperature readings result in recording the event, reducing the bulb brightness level and setting the red temperature LED to blink.

Next, step **722** is performed to monitor and control the fans **402**/**408**. The fan speed can be changed in response to data collected by the temperature sensors **502** or in response to data received by the I/O device **510**. A check is made at step **724** to determine if all the fans **402**/**408** are working properly. If they are not working properly, step **726** is performed to display the failure indicators on the LED and to record the failure in the event log. The backup system data is collected at step **728**. The loop begins again at step **706** and continues until the monitor is powered off.

FIG. **8** is a flowchart of the data flow in an exemplary bulb brightness control module executed by the controller **500**. As shown in FIG. **8**, the controller **500** executes a program that receives information from temperature sensors **502** and brightness controls **508**. The controller **500** provides a command signal to the inverters **202**/**204** which drive the bulbs **102**. Light sensors **506** provide feedback to the controller **500** indicating the amount of generated light. The brightness level changes as the control knobs change. In addition, the brightness level could be controlled through software and this level could be adjusted as a function of time. The bulbs **102** decay and degrade over time, thus consuming more power to produce the same level of luminance from the bulbs. The controller **500** recognizes the decrease in bulb brightness, based on input from the brightness sensors **506**, and compensates for it, thus keeping the bulbs **102** brighter longer. This closed loop control can aid in maintaining the bulb output at a requisite level.

The I/O device **510** shown in FIG. **5** can also allow the backlit LCD monitor to provide fault information to a central repository for analysis. FIG. **9** shows an exemplary embodiment of a system **900** in which a number of backlit LCD monitors **902** are coupled to a network **904** through I/O device **510**. Such a connection may be made through a network interface such as an Ethernet card. The network may be a propriety network (e.g., extranet, intranet) or a public network (e.g., Internet). Also coupled to the network **904** is a server **906** and database **908**. The fault logs of all the backlit LCD monitors **902** can be retrieved periodically (e.g., daily) and stored in a database **908**. These logs can then be used to predict faults through fault prediction software and schedule service activities for the backlit LCD monitors. In addition the database **908** could include the serial number of the major components and the software version level being executed by the controller. Such a system is useful in application where the backlit LCD monitors **902** are located in disparate locations such as airport control towers.

Central storage of fault data in database **908** can also be used to detect manufacturing trends. For example, it may be determined that inverters on certain backlit LCD monitors fail more frequently. This information can be indexed to manufacturing date to detect if a manufacturing process is responsible for failures.

In addition, an individual backlit LCD monitor **902** can request service if a particular fault or series of faults are logged. Instead of waiting for the fault log to be retrieved by server **906**, the backlit LCD monitor **902** may initiate a service request over network **904** if certain conditions occur. For example, if five sequential fan failures are logged, the controller **500** may be programmed to request fan service by sending a service request through I/O device **510** to server **906**.

The invention is not limited to backlit LCD monitors but may be applied to a variety of devices in which performance parameters (such as heat, current, voltage) are monitored, faults logged, and predictive analysis used to schedule maintenance. The networked system of FIG. **9** may be used for devices other than backlit LCD monitors.

The present invention includes both passive and active cooling techniques which can result in a more efficient backlit LCD monitor. The cooling technique of drawing filtered air across the bulbs reduces the interior temperature of the backlit LCD monitor and it allows the bulbs to operate at a higher current and/or in higher ambient conditions. Using the fans only when the temperature of the backlit LCD monitor reaches a pre-selected threshold extends the life of the fans and allows the backlit LCD monitor warm-up process to be more efficient. Bulb life can be extended by providing enough power to provide the selected brightness level and by increasing the current as the bulbs decay. Fewer outages can result from warning operators when temperature levels increase or bulb brightness decreases and by using predictive software and replacing components before the fail and render the monitor inoperable.

As described above, the present invention can be embodied in the form of computer-implemented processes and apparatuses for practicing those processes. The present invention can also be embodied in the form of computer program code containing instructions embodied in tangible media, such as floppy diskettes, CD-ROMs, hard drives, or any other computer-readable medium, wherein, when the computer program code is loaded into and executed by a computer, the computer becomes an apparatus for practicing the invention. The present invention can also be embodied in the form of computer program code, for example, whether stored in a storage medium, loaded into and/or executed by a computer or transmitted over some transmission medium, such as over electrical wiring or cabling, through fiber optics, or via electromagnetic radiation, wherein, when the computer program code is loaded into and executed by a computer, the computer becomes an apparatus for practicing the invention. When implemented on a general-purpose microprocessor, the computer program code segments configure the microprocessor to create specific logic circuits.

While the invention has been described with reference to exemplary embodiments, it will be understood by those skilled in the art that various changes may be made and equivalents may be substituted for elements thereof without departing from the scope of the invention. In addition, many modifications may be made to adapt a particular situation or material to the teachings of the invention without departing from the essential scope thereof. Therefore, it is intended that the invention not be limited to the particular embodiments disclosed for carrying out this invention.

What is claimed is:

1. A backlit liquid crystal display monitor comprising:

a backlight assembly having opposing top and bottom surfaces, said bottom surface including a plurality of fluorescent bulbs having parallel bulb axes, and two or more inverters to drive said bulbs;

a cooling assembly having opposing top and bottom surfaces, the top surface of said cooling assembly mounted on the bottom surface of said backlight assembly to form a backlight chamber defining air space around said bulbs, said cooling assembly including:

a light sensor on the top surface of said cooling assembly, said light sensor having a sensor axis that is perpendicular to the bulb axes of said fluorescent bulbs;

a temperature sensor;

a heat sink on the bottom surface of said cooling assembly; and

an air inlet and an air outlet in fluid communication with said closed air space and positioned for causing air to flow across said bulbs;

a rear cover assembly placed over the bottom surface of said cooling assembly to define an electronics chamber between said rear cover assembly and the bottom surface of said cooling assembly, the electronics chamber being separate from said backlight chamber, said rear cover assembly including:

an exhaust fan in fluid communication with said air outlet generating a first airflow through said backlight chamber;

a cover inlet in fluid communication with said air inlet;

a filter placed over said cover inlet; and

a fan positioned to draw air towards said heat sink in said electronics chamber generating a second airflow separate from said first airflow; and a controller in communication with said sensors, said inverters, and said fans.

2. The monitor of claim **1** wherein said filter is a HEPA filter.

3. A backlit liquid crystal display monitor comprising:

a backlight assembly having opposing top and bottom surfaces, said bottom surface including a plurality of fluorescent bulbs having parallel bulb axes, and two or more inverters to drive said bulbs;

a cooling assembly having opposing top and bottom surfaces, the top surface of said cooling assembly mounted on the bottom surface of said backlight assembly to form a closed air space around said bulbs, said cooling assembly including:

a light sensor on the top surface of said cooling assembly, said light sensor having a sensor axis that is perpendicular to the bulb axes of said fluorescent bulbs;

a temperature sensor;

a heat sink on the bottom surface of said cooling assembly; and

an air inlet and an air outlet in fluid communication with said closed air space and positioned for causing air to flow across said bulbs;

a rear cover assembly placed over the bottom surface of said cooling assembly, said rear cover assembly including:

an exhaust fan in fluid communication with said air outlet;

a cover inlet in fluid communication with said air inlet;

a filter placed over said cover inlet; and

a fan positioned to draw air towards said heat sink; and

a controller in communication with said sensors, said inverters, and said fans;

a brightness control device in communication with said controller; and

a remote brightness control device in communication with said controller, said remote brightness control device overriding said brightness control device.

4. The monitor of claim **3** wherein:

said remote brightness control device includes a switch for designating a brightness range and a potentiometer for specifying a brightness within a designated range.

5. The monitor of claim **1** further comprising:

a fan status indicator light in communication with said controller;

a temperature status indicator light in communication with said controller; and

a power status indicator light in communication with said controller.

6. The monitor of claim **1** further comprising an I/O device that is in communication with said controller.

7. The monitor of claim **6** wherein said I/O device is a serial port.

8. The monitor of claim **6** wherein said I/O device is an infrared data association port.

9. The monitor of claim **6** wherein said I/O device is connected to a network.

10. The monitor of claim **9** wherein said network is the Internet.

11. The monitor of claim **9** wherein said network is an intranet.

12. The monitor of claim **1** wherein each said inverter drives a different portion of said bulbs.

13. The monitor of claim **1** wherein said light sensor generates real-time diagnostic data and wherein said light sensor is dynamically reconfigured in response to said diagnostic data.

* * * * *