UNITED STATES PATENT AND TRADEMARK OFFICE

BEFORE THE PATENT TRIAL AND APPEAL BOARD

SAMSUNG ELECTRONICS CO., LTD. AND SAMSUNG ELECTRONICS AMERICA, INC.
Petitioners,

v.

MANUFACTURING RESOURCES INTERNATIONAL, INC.
Patent Owner

Title: CONSTRICTED CONVECTION COOLING SYSTEM FOR AN ELECTRONIC DISPLAY

U.S. Patent No. 11,013,142

Inter Partes Review No. IPR 2023-00221

PETITIONERS' REPLY TO PATENT OWNER'S RESPONSE

TABLE OF CONTENTS

I. INTRODUCTION 1

II. RELATED IPR PROCEEDING 1

III. GROUND 1: KARPPANEN AND LARSON RENDERS THE CHALLENGED CLAIMS UNPATENTABLE 2

A. Karppanen Discloses a "Closed Loop" 2

B. Karppanen Discloses a "Heat Exchanger" 4

1. Plain and Ordinary Meaning of "Heat Exchanger" 4

2. Karppanen Discloses a "Heat Exchanger" as a POSITA Would Have Understood the Plain and Ordinary Meaning of that Term 11

3. Karppanen's Heat Exchanger "Forms Part of Said Open Loop Airflow Pathway" and "Forms Part of Said Closed Loop Gas Circulation Pathway" 12

C. A POSITA Would Have Been Motivated to Combine Karppanen with Larson 12

IV. GROUND 2: YARE AND LARSON RENDER THE CHALLENGED CLAIMS UNPATENTABLE 14

A. The Combination of Yare and Larson Discloses the Recited "Closed Loop" 15

B. Yare's Heat Exchanger "Forms Part of Said Open Loop Airflow Pathway" and "Forms Part of Said Closed Loop Gas Circulation Pathway" 16

C. A POSITA Would Have Been Motivated to Combine Yare with Larson 18

V. THERE ARE NO SECONDARY CONSIDERATIONS OF NONOBVIOUSNESS 19

A. Long Felt Need, Failure, and Copying 19

B. Commercial Success 21

C. Industry Praise and Licensing 23

VI. MR. SMITH-GILLESPIE'S TESTIMONY IS ENTITLED TO WEIGHT 24

VII. CONCLUSION 25

TABLE OF AUTHORITIES

Page(s)

Cases

ABT Sys., LLC v. Emerson Elec. Co.,
797 F.3d 1350 (Fed. Cir. 2015) 19

Fanduel, Inc. v. Interactive Games LLC,
966 F.3d 1334 (Fed. Cir. 2020) 25

Fox Factory, Inc. v. SRAM, LLC,
944 F.3d 1366 (Fed. Cir. 2019) 21

Iron Grip Barbell Co., Inc. v. USA Sports, Inc.,
392 F.3d 1317 (Fed. Cir. 2004) 20

KSR Int'l Co. v. Teleflex Inc.,
550 U.S. 398 (2007).....13, 14

Maalouf v. Microsoft Corp.,
No. 2022-1164, 2023 WL 2182284 (Fed. Cir. Feb. 23, 2023).....8

Ormco Corp. v. Align Tech., Inc.,
463 F.3d 1299 (Fed. Cir. 2006) 20, 22

Shoes by Firebug LLC v. Stride Rite Children's Grp., LLC,
962 F.3d 1362 (Fed. Cir. 2020) 24

VLSI Tech. LLC v. Intel Corp.,
53 F.4th 646 (Fed. Cir. 2022) 8

Yorkey v. Diab,
601 F.3d 1279 (Fed. Cir. 2010) 25

TABLE OF EXHIBITS

Exhibit No.	Description of Document
1001	U.S. Patent No. 11,013,142 to Dunn ("the '142 patent")
1002	Declaration of Robert Smith-Gillespie
1003	Curriculum Vitae of Robert Smith-Gillespie
1004	International Patent Application No. PCT/FI2006/050145 with Publication No. WO2007116116A1 to Karppanen et al. ("Karppanen")
1005	U.S. Patent No. 6,392,727 to Larson et al. ("Larson")
1006	United Kingdom Patent Application No. GB 2402205A to Yare ("Yare")
1007	U.S. Patent No. 6,825,828 to Burke et al. ("Burke")
1008	E. Fred Schubert & Jong Kyu Kim, Solid-State Light Sources Getting Smart, 308 Science 1274 (2005) ("Schubert")
1009	Military Handbook: Reliability Prediction of Electronic Equipment, Department of Defense, MIL-HDBK-217F (1991) ("MIL-HDBK-217F")
1010	Allan Webber, Calculating Useful Lifetimes of Embedded Processors, Texas Instruments Incorporated, SPRABX4 (Nov. 2014) ("Webber")

Exhibit No.	Description of Document
1011	Lian-Tuu Yeh & Richard C. Chu, Thermal Management of Microelectronic Equipment: Heat Transfer Theory, Analysis Methods, and Design Practices (Dereje Agonafer ed., 2002) ("Yeh & Chu")
1012	Allan W. Scott, Cooling of Electronic Equipment (John Wiley & Sons, 1974) ("Scott")
1013	Dave S. Steinberg, Cooling Techniques for Electronic Equipment (John Wiley & Sons, 1980) ("Steinberg")
1014	U.S. Patent No. 5,748,269 to Harris et al. ("Harris")
1015	U.S. Patent No. 6,504,713 to Pandolfi et al. ("Pandolfi")
1016	U.S. Patent No. 4,327,803 to Mullejeans et al. ("Mullejeans")
1017	U.S. Patent No. 5,002,118 to Olmstead et al. ("Olmstead")
1018	U.S. Patent No. 6,244,333 to Bergh et al. ("Bergh")
1019	U.S. Patent No. 4,896,218 to Vick ("Vick")
1020	U.S. Patent No. 6,020,945 to Sawai et al. ("Sawai")
1021	U.S. Patent No. 3,858,965 to Sumita ("Sumita")
1022	File History for U.S. Patent Application No. 16/933,932

Exhibit No.	Description of Document
1023	Claim Construction Order, Mfg. Resource Intl., Inc. v. Civiq Smartscapes, LLC, Civil Action No. 17-269-RGA (D. Del. Oct. 3, 2018)
1024	U.S. Patent No. 8,854,572 to Dunn (the "'572 patent")
1025	U.S. Patent No. 9,629,287 to Dunn (the "'287 patent")
1026	U.S. Patent No. 9,173,325 to Dunn (the "'325 patent")
1027	Redline of Corrected Petition
1028	Claim Construction Order (Order No. 13) dated May 15, 2023 in *In the Matter of Certain Outdoor and Semi-Outdoor Electronic Displays, Products Containing Same, And Components Thereof*, Inv. No. 337-TA-1331 (U.S.I.T.C.)
1029	Declaration of Srikanth K. Reddy in Support of Motion for *Pro Hac Vice* Admission Under 37 C.F.R. § 42.10(c)
1029	Corrected Declaration of Srikanth K. Reddy in Support of Motion for *Pro Hac Vice* Admission Under 37 C.F.R. § 42.10(c)
1030	Final Initial Determination on Violation of Section 337 in *Certain Outdoor and Semi-Outdoor Electronic Displays, Products Containing Same, and Components Thereof*, Investigation No. 337-TA-1331 [CONFIDENTIAL]

Exhibit No.	Description of Document
1031	Excerpt of February 1, 2023 Deposition of Himanshu Pokharna in Investigation No. 337-TA-1331
1032	December 13, 2023 Deposition of Himanshu Pokharna
1033	Excerpt of U.S. Patent No. 10,506,740 File History
1034	U.S. Patent Application Publication No. US 2004/0135482
1035	Excerpt of Day 3 Hearing Testimony in Investigation No. 337-TA-1331 [CONFIDENTIAL]
1036	Excerpt of Day 1 Hearing Testimony in Investigation No. 337-TA-1331
1037	Samsung Outdoor display OHA, OHB series Brochure, *available at* https://displaysolutions.samsung.com/pdf/brochure/7924/Samsung_OHA_OHB_series_Brochure_220310_Web.pdf
1038	Samsung Outdoor Signage, OHN, OHN-D Series Datasheet, *available at* https://displaysolutions.samsung.com/pdf/datasheet/3732/Samsung_Outdoor_Signage_OHN,OHN-D_Datasheet_200109_web.pdf
1039	https://lg-mri.com/boldvu-outdoor-lcd-displays/
1040	Excerpt of October 24, 2018 Deposition Transcript of William Dunn [CONFIDENTIAL]

Exhibit No.	Description of Document
1041	December 21, 2022 Complainant Proposed Claim Constructions in Investigation No. 337-TA-1331

I. INTRODUCTION

Regarding Ground 1, MRI's primary argument is that Karppanen does not disclose the claimed "heat exchanger" based on an improperly narrow construction. Under the proper interpretation, Karppanen discloses this limitation. Regarding Ground 2, MRI primarily argues that Yare's "closed loop" does not encircle its electronic image assembly. But the evidence establishes that a POSITA would have understood Yare to teach this limitation, or in the alternative, that it would have been obvious to modify Yare in view of Larson to set the electronic image assembly back from the front cover glass in order to improve heat dissipation. MRI's argument that a POSITA would not have been motivated to combine Karppanen or Yare with Larson relies on an overly restrictive reading of the field of prior art, and MRI fails to rebut the showing of motivation.

Therefore, MRI's arguments should be rejected and the challenged claims should be found unpatentable.

II. RELATED IPR PROCEEDING

In the time since MRI filed its Response, Administrative Law Judge Monica Bhattacharyya issued a Final Initial Determination ("FID") on Violation of Section 337 in related matter *Certain Outdoor and Semi-Outdoor Electronic Displays, Products Containing Same, and Components Thereof*, Investigation No. 337-TA-1331 ("ITC proceeding"). Ex. 1030. In that decision, the ALJ held that Samsung

had shown by clear and convincing evidence that claims 6 and 10 are obvious over Karppanen and Larson [Ground 1]. Ex. 1030, 274–82 (cl. 6), 286–87 (cl. 10). The ALJ also found that claims 6 and 10 were not obvious over Yare [Ground 2]. *Id.*, 282 –86 (cl. 6), 287 (cl. 10). The FID credited testimony from Mr. Smith-Gillespie, who also submitted a declaration on behalf of Samsung in this proceeding (Ex. 1002).

III. GROUND 1: KARPPANEN AND LARSON RENDERS THE CHALLENGED CLAIMS UNPATENTABLE

MRI argues that: (1) Karppanen does not disclose a "closed loop"; (2) Karppanen does not disclose a "heat exchanger"; and (3) Karppanen's heat exchanger does not "form part of" the open and closed loop pathways. For the reasons below, none of MRI's arguments are persuasive.

A. Karppanen Discloses a "Closed Loop"

Karppanen discloses a "closed loop" under both Samsung's and MRI's proposed constructions. Paper 17 ("POR"), 19.

MRI does not dispute that Karppanen discloses a closed loop under the ALJ's construction, which is "a gas pathway forming a complete loop within a display housing." *See* POR, 28–31. Indeed, Karppanen discloses that fans inside the display casing circulate air in the space created by ducting 66 between the display element and the display casing with gas circulating in a "complete loop" within the housing. Ex. 1004, 9:3–8; *see also id.*, 3:28–32, 4:32–36.

MRI argues that Karppanen does not disclose that its closed loop is "essentially isolated from external air" as required under Samsung's proposed construction. POR, 28. Karppanen, however, clearly discloses this. The '142 patent states that " [t]he gas which travels through the closed loop would also preferably be substantially free of contaminants and/or particulate (ex. dust, dirt, pollen, water vapor, smoke, etc.) in order to prevent an adverse effect on the image quality and damage to the internal electronic components." Ex. 1001, 5:25–33. Consistent with this disclosure, Karppanen discloses that its electronic display is placed into a "closed display casing" that has been made "weatherproof," and that its device casing is closed through the use of "sealing elements." Ex. 1004, 6:17–24, 4:6–8, 7:35–38; Ex. 1002, ¶ 157.

MRI argues that Karppanen is "silent as to the IP rating of the enclosure or whether dust and water can enter the system" and that "[a]t most, Karppanen makes reference to a 'waterproof' display casing." POR, 28–29. First, there is no basis, other than conclusory expert testimony, for MRI's attempt to equate an IP rating with the "closed loop" limitation. *See id*. Indeed, though MRI's expert opines that an enclosure must be rated IP55 to be "substantially free from contaminates and/or particulate" (Ex. 2024, ¶ 78), he acknowledged that entirely *open loop* systems in the prior art, which use filters to keep out dust and contaminants, have been rated IP56. Ex. 2015, 1279:12–16. Accordingly, an IP rating cannot be used to distinguish

a closed loop from an open loop, and Karppanen's silence as to IP rating does not indicate that it fails to disclose this limitation. Second, MRI ignores and mischaracterizes Karppanen's disclosures regarding its "weatherproof" display. Karppanen discloses that its electronic information board is "suitable for installation outdoors." Ex. 1004, 3:8–15. Karppanen describes that its ventilator slots "can be provided with filters in order to prevent the access of impurities to the ventilation space," indicating that dust and contaminants should not enter. Ex. 1004, 7:19–21.

Notably, in the ITC proceeding, the ALJ found that Karppanen discloses a "closed loop of isolated gas," finding Samsung's expert Mr. Smith-Gillespie's testimony "persuasive and supported by Karppanen's disclosure." Ex. 1030, 244–45.

B. Karppanen Discloses a "Heat Exchanger"

The parties' dispute comes down to the meaning of the claimed "heat exchanger." MRI does not dispute that Karppanen discloses a "heat exchanger" under Samsung' plain and ordinary meaning . Instead, MRI attempts to improperly limit the claimed "heat exchanger." MRI's proposed construction is not supported by the claim language, intrinsic, or extrinsic evidence.

1. Plain and Ordinary Meaning of "Heat Exchanger"

The parties agree that the term "heat exchanger" is subject to its plain and ordinary meaning, but dispute what that is. *See* POR, 20. The plain and ordinary

meaning of "heat exchanger" is broad and not limited to "a device that uses alternating, enclosed channels or tubes of fluid" as MRI argues. *See id*. As set forth in the Petition, under Samsung's plain and ordinary meaning, a POSITA would understand that the claimed "heat exchanger" is a device used to transfer heat from the closed loop pathway, i.e. the circulating gas, to the open loop pathway, i.e. the ambient gas, which includes finned heat sinks as disclosed by Karppanen. Pet., 37–41; Ex. 1002, ¶¶ 64, 76.

Both parties' experts agreed at the ITC hearing that "heat exchanger" is a broad term covering many types of structures. Ex. 2014, 998:12–18 (Smith-Gillespie) ("heat exchanger" broadly encompasses a device designed to transfer heat from a relatively hotter body to a relatively cooler body); Ex. 2015, 1251:1–1252:18 (Pokharna) (discussing textbook describing a heat exchanger as a device "exchanging heat between two fluid streams that are not mixed together"). Dr. Pokharna has repeatedly confirmed this understanding. *See* Ex. 2024, ¶ 96 ("Though persons of skill in the art will sometimes refer to a device that moves heat as a heat exchanger . . ."); Ex. 1031, 19:8–25 (testifying that "[a] heat exchanger, typically, is used to remove heat from one fluid stream to other fluid stream, typically" and is a "pretty broad term" where "there are literally hundreds of kinds of heat exchangers," but is "broadly used for exchanging heat from one fluid stream to other fluid stream.").

MRI's position that the plain and ordinary meaning of "heat exchanger" is limited to a specific type of "channel/tube" heat exchanger is belied by Dr. Pokharna's deposition testimony. At deposition, Dr. Pokharna referred to the finned heat sink disclosed in another reference, Nagashima (Ex. 2020), as a "heat exchanger," even though it does not comprise the "channel/tube" structure that MRI and Dr. Pokharna contend is necessary. Ex. 1032, 41:23–42:9 . Nagashima does not use the term "heat exchanger," but describes a "heat radiating fin" provided on the "heat receiving head." Ex. 2020, 7:9–19. When asked how a POSITA would understand the direction of airflow generated by the fan (as seen in Nagashima's Figure 6B below), Dr. Pokharna explained "it could be taking in air from the inlet . . . and it will go ***through the heat exchanger*** and then finds its way out of the chassis . . ."). Ex. 1032, 41:23–42:9.

FIG. 6B

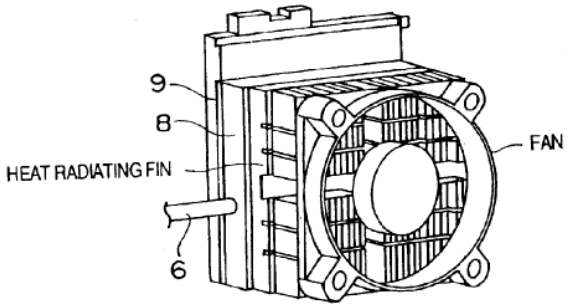

MRI likewise acknowledges that "skilled artisans may colloquially refer to an object that is exchanging heat as a heat exchanger." POR, 35–36. To the extent MRI and

Dr. Pokharna argue that "the heat exchanger claimed by the patent is more specific" (*see id.*) or "narrower" (Ex. 2024, ¶ 96) than its plain and ordinary meaning, MRI has not argued disclaimer or alternative lexicography, nor would any such argument be supported.

The specification describes the broad scope of this claim term consistently with the above. The abstract describes that "[a] heat exchanger may be used to transfer heat from the circulating gas to the ambient gas." Ex. 1001, Abstract; *see also id.*, 4:14–16 ("By using the heat exchanger 101, heat may be transferred from the circulating gas to the ambient gas."). The specification goes on to explain: "[i]n a preferred embodiment, the heat exchanger **101** would be a crossflow heat exchanger. However, ***many types of heat exchangers are known and can be used with any of the embodiments herein***." *Id.*, 4:22–25 (emphasis added).

There is also no claim language compelling MRI's interpretation, nor does MRI argue that there is. *See generally* POR, § VI. Instead, MRI cites the '142 patent's description that "[t]he heat exchanger 101 may be a cross-flow, parallel flow, or counter-flow heat exchanger." *Id.*, 14 (citing Ex. 1001, 4:22–42). But this language refutes MRI's argument on its face: it makes clear that the heat exchanger "*may* be"—but need not *necessarily* be—one of the three types of exchangers listed. Further, the preceding sentence, as noted above, states that "many types of heat exchangers are known and can be used with any of the embodiments herein."

Ex. 1001, 4:23–25. This express recognition that there are "many" types of exchangers forecloses MRI's suggestion that the specification intended the three examples listed to be exhaustive. The Federal Circuit has "repeatedly cautioned" that "claims should not be limited 'to preferred embodiments or specific examples in the specification.'" *VLSI Tech. LLC v. Intel Corp.*, 53 F.4th 646, 652 (Fed. Cir. 2022); *see also Maalouf v. Microsoft Corp.*, No. 2022-1164, 2023 WL 2182284, at *3 (Fed. Cir. Feb. 23, 2023) ("[t]he Board properly declined to import a portion of an exemplary embodiment from the specification into the claim").

MRI's proposed construction is also inconsistent with the prosecution history of the parent '740 patent. During prosecution of that patent, MRI did not disagree with the examiner who found that the prior art reference Thielemans teaches airflow "through" Thielemans's "heat exchanger," which Thielemans describes as "a heat sink **22** in the form of a heat transporting plate," as shown in the image below. Ex. 1033.10–32; Ex. 1034, ¶ [0049], Fig. 1a. MRI never tried to distinguish Thielemans on this basis during prosecution. Instead, MRI sought a broad claim scope of the claimed "heat exchanger."[1]

[1] The plain and ordinary meaning is also reflected by the construction MRI initially sought (and then dropped) for "heat exchanger" in the ITC proceeding: "[a] device

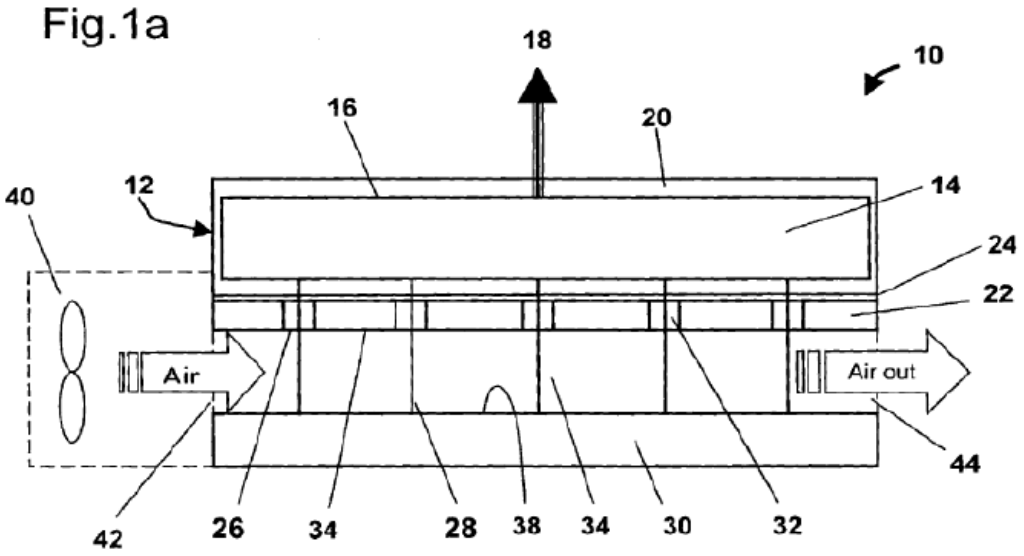

MRI's position is also inconsistent with the academic literature on which Dr. Pokharna relies. Dr. Pokharna admitted that "Fundamentals of Heat and Mass Transfer," which published in 2006 (Ex. 2017), and that MRI refers to as "the dominant thermal management text used at the time of the invention" (POR, 23), broadly describes a heat exchanger as a device "exchanging heat between two fluid streams that are not mixed together." Ex. 2015, 1251:1–1252:18; Ex. 2017, 676 ("The process of heat exchange between two fluids that are different temperatures and separated by a solid wall occurs in many engineering applications. The device

---

for transferring heat from one fluid to another without allowing them to mix." Ex. 1041.

used to implement this exchange is termed a heat exchanger. . .”); *see also* Ex. 2015, 1281:7–23.

MRI misleadingly cites to Mr. Smith-Gillespie’s testimony concerning the ’064 provisional. POR, 22, 33. Mr. Smith-Gillespie explained that the disclosure in paragraph 42 of the ’064 provisional “[m]ore likely defines a heat sink” where “there’s fins on the outsides of this cooling chamber, 40, and it’s just [a] flat plate on the other side.” Ex. 2021, 73:22–74:7. Mr. Smith-Gillespie explained how the disclosure in paragraph 42 of the ’064 provisional is different from Karppanen’s cooling element 32, which would be a “heat exchanger” in the context of the ’142 patent. *See id.*, 74:16–75:3 (“So in Karppanen, we have a fin array in an – in an airflow area that is part of a fin array that’s in another airflow area. So the close[d] loop has a fin array inside of it that captures the heat from the air and transfers it directly to the fin array in the open loop.”). This is not an “arbitrary” distinction as MRI states (POR, 33); indeed, as MRI acknowledges, the claims require that the “heat exchanger” be a “part of the pathway of the closed and open loops.” *See, e.g.*, POR, 21. MRI lastly cites to Dr. Pokharna’s unsupported vague statement “that commercial sources for thermal management devices also classify heat exchangers separately from other devices such as heat sinks, heat pipes and finned surfaces.” POR, 24 (citing Ex. 2024, ¶ 61). In any case, the claim language, specification, and

the prosecution history of the ’142 parent (the ’740 patent), all support a finding that MRI did not intend to limit the claims to any particular type of heat exchanger.

Notably, in the ITC proceeding, the ALJ adopted Samsung’s plain and ordinary meaning proposal and rejected the same narrowed construction for “heat exchanger” that MRI proposes here. Relying on the specification, prosecution history, and extrinsic evidence, the ALJ found that “[t]he evidence of record shows that the term ‘heat exchanger,’ as used in the patent, has a broad meaning and is not limited to the heat exchangers specifically described.” Ex. 1030, 252, 277–78.

2. Karppanen Discloses a “Heat Exchanger” as a POSITA Would Have Understood the Plain and Ordinary Meaning of that Term

MRI does not dispute that Karppanen discloses the claimed “heat exchanger” under Petitioner’s proposed plain and ordinary meaning. *See* POR, 31–37; Paper 9 (“Pet.”), 37–41. On a similar record before the ITC, the ALJ found that the evidence clearly and convincingly showed that Karppanen’s disclosure of cooling elements 32 “constitutes a ‘heat exchanger’” and for the same reasons discussed for the ’740 patent, Karppanen discloses the “heat exchanger” recited in claim 6 of the ’142 patent. Ex. 1030, 255–56, 277–78.

3. Karppanen's Heat Exchanger "Forms Part of Said Open Loop Airflow Pathway" and "Forms Part of Said Closed Loop Gas Circulation Pathway"

MRI's argument that Karppanen does not disclose this limitation of claims 3, 6, and 15 is unsupported. POR, 37–38. MRI argues that the additional claim language "forms part of said . . . pathway" "describes the structure of the heat exchanger" and that "[t]he heat exchanger itself, with its channels or tubes, must actually form part of each airflow pathway," but that is plainly not what the claim says. *See id*.

Under the proper reading of the claim, there is no dispute that Karppanen discloses this limitation. Pet., 25–27. In particular, Karppanen discloses that air flowing through the cooling space 20 flows between the cooling element 32's "plate-like cooling fins" (labeled second heat transfer part 62) such that "a first portion" of the cooling element 32 (i.e. heat exchanger) "forms part of the open loop airflow pathway." Ex. 1002, ¶ 187–90. Because air flowing through Karppanen's closed pathway circulates between the fins of the first heat transfer part 60 of the cooling element 32, "a second portion" of the cooling element 32 (i.e. heat exchanger) "forms part of said closed loop airflow pathway." *Id.* ¶ 191–93.

C. A POSITA Would Have Been Motivated to Combine Karppanen with Larson

MRI argues that there is no motivation to combine Karppanen with Larson because the references are allegedly "directed to different fields of art" and the

provided motivations are "hindsight rationalization." POR, 50–51. MRI's arguments are incorrect.

First, these references are directed to the same field of art, namely, electronic displays such as LCDs. *See* Ex. 1004, 3:20–23 ("The invention relates to an electronic information board comprising . . . a flat display element, such as a TFT LCD display or plasma display. . ."); Ex. 1005, 2:24–25 ("The subject matter of the present invention is particularly suited for use in connection with displays, such as LCDS.").

Second, a POSITA would have been motivated to combine Larson's disclosure of a solar energy reduction layer with Karppanen's display. Contrary to MRI's allegations of hindsight (POR, 51), Mr. Smith-Gillespie explained that by 2008, there were widely known benefits to using solar energy reduction layers such as polarizers, including improving the contrast of the display. *See* Ex. 1002, ¶¶ 126, 129, 136. MRI makes no arguments that it would have been beyond the skill of a POSITA to modify Karppanen's display to include a solar energy reduction layer, polarizer, or anti-reflective film. *See KSR Int'l Co. v. Teleflex Inc.*, 550 U.S. 398, 401 (2007) ("if a technique has been used to improve one device, and a [POSITA] would recognize that it would improve similar devices in the same way, using the technique is obvious unless its actual application is beyond his or her skill.").

MRI vaguely argues that "Larson teaches away from using its system to prevent thermal energy from entering its system" as the "polarizers absorb solar radiation." POR, 51. MRI, however, does not rely on any expert testimony, and its argument amounts to nothing more than unsupported attorney argument. *Id.*

Notably, in the ITC proceeding, the ALJ, crediting Mr. Smith-Gillespie's testimony, found that a POSITA "would have had a reason to modify Karppanen to add a solar energy reduction layer, such as a polarizer, on the inner surface of Karppanen's cover panel." Ex. 1030, 279. The ALJ found that a POSITA "would have been aware of the benefits of using a solar energy reduction layer," and while "a reason to combine need not be shown in the references themselves, here the Karppanen and Larson references themselves indicate the importance of display contrast and heat reduction." *Id.*, 279–80. The ALJ found that MRI's argument that the references were in different fields was not persuasive where both references "address the field of electronic displays." *Id.*, 280.

IV. GROUND 2: YARE AND LARSON RENDER THE CHALLENGED CLAIMS UNPATENTABLE

MRI's primary contention is that Yare does not expressly disclose that its electronic image assembly would be encircled by a "closed loop" of air. *See* POR, 40–47. But even if Yare's disclosure alone were insufficient, MRI cannot overcome the evidence showing that it would have been obvious for a POSITA to have spaced

Yare's electronic image assembly, such as an LCD, within Yare's cabinet back from the front cover glass as taught by Larson.

A. The Combination of Yare and Larson Discloses the Recited "Closed Loop"

MRI argues that Yare does not disclose *any* information regarding the configuration of its electronic display. POR, 40. As recognized by MRI, however, Yare discloses that its cabinet configuration would be adaptable to all different types of displays. POR, 41–42. Even with Yare's alleged "silence" (*see id.*), a POSITA would have understood how these displays were typically configured. Ex. 1002, ¶¶ 293–98.

In the ITC proceeding, the ALJ found that the evidence "did not show, clearly and convincingly, that Yare disclosed a closed loop gas circulation path 'about the electronic image assembly,'" and rather, that Yare discloses "one within the electronic image assembly." Ex. 1030, 268–70. The ALJ, however, did not have the complete record that is before the Board. For instance, the ALJ noted Mr. Smith-Gillespie's testimony regarding the known spacing of electronic displays from the front display surface, but found that his brief testimony—in contrast to the more extensive testimony provided in his declaration—fell short of providing clear and convincing evidence to support obviousness. *Id.*, 270. For example, Mr. Smith-Gillespie explained in his declaration that a POSITA would have further understood

that Yare teaches airflow across the *front* of the display 20, as indicated by the "L"-shaped arrows in Yare's original Figure 4. *See* Ex. 1002, ¶¶ 324–29.

A POSITA would have further understood that to the extent not expressly disclosed by Yare, an ideal location for the electronic image assembly, as taught by Larson, would have a POSITA led to the closed loop of air (which MRI does not dispute exists) encircling it. Pet., 85–86, 88–89; Ex. 1002, ¶¶ 293–98. MRI does not dispute that Larson discloses this configuration. Instead, MRI argues that "Petitioner offers no motivation to make this change." POR, 46–47. But MRI fails to address Samsung's explanation that a POSITA would have understood that a screen in contact with the front of the cabinet would suffer from design defects, and Larson's teaching the gap between the screen and front transparent area would resolve those design defects. Pet., 101; Ex. 1002, ¶ 266. Thus, MRI has not overcome the showing that this limitation would have been obvious in view of Yare and Larson.

B. Yare's Heat Exchanger "Forms Part of Said Open Loop Airflow Pathway" and "Forms Part of Said Closed Loop Gas Circulation Pathway"

As above for Ground 1, MRI misreads the claim language to require a heat exchanger structure with channels or tubes. *See* POR, 47–48. That is plainly not

what the claim requires.[2] As set forth in the Petition, the right side of heat exchanger 70 is a first portion that forms a part of atmospheric air zone 40, which is an open loop airflow pathway. Pet., 82–83; Ex. 1002, ¶¶ 331–33. The left side of heat exchanger 70 is a second portion that forms a part of sealed zone 30, which is a closed loop airflow pathway. Pet., 85; Ex. 1002, ¶ 337. MRI argues that "[t]here are no channels or pipes created on the atmospheric size of the heat exchanger—as required by the claim language." POR, 49. But the plain claim language does not require channels or pipes, and MRI cannot dispute that Yare's heat exchanger "forms part of" sealed zone 30, i.e. the closed loop pathway.

[2] MRI's apparent acknowledgement that Yare discloses a "heat exchanger" is at odds with its position that the claim term "heat exchanger" requires the tube/channel structure. The ALJ similarly noted that Dr. Pokharna's testimony regarding heat exchangers was inconsistent, as his position "that heat exchangers necessarily require 'flow channels through which you have the two fluids, the heating or the cooling fluid going through it' was at odds with his argument that Yare discloses a heat exchanger even though—according to Dr. Pokharna—it has air flowing 'along it' and not 'through it.'" Ex. 1030, 255 n. 102.

C. A POSITA Would Have Been Motivated to Combine Yare with Larson

MRI argues that there is no motivation to combine because Yare and Larson are allegedly "directed to different fields of art" and the provided motivations are "hindsight rationalization." POR, 50–51. MRI's arguments are incorrect.

First, these references are directed to the same field of art, namely, electronic displays such as LCDs. *See* Ex. 1006, 2:4–12 ("The present invention . . . is particularly suitable for use in providing large scale displays in public places"). Ex. 1005, 2:24–25 ("The subject matter of the present invention is particularly suited for use in connection with displays, such as LCDs."). Second, for the reasons described above for Karppanen, a POSITA would have been motivated to combine Yare with Larson with a reasonable expectation of success. *Supra* III.C.

Notably, in the ITC proceeding, the ALJ, crediting Mr. Smith-Gillespie's testimony, found that "for the same reasons discussed above regarding Karppanen, Respondents' arguments are persuasive" and that a POSITA "would have had reason to modify Yare to include the solar-reduction layers of Larson, and with a reasonable expectation of success." Ex. 1030, 286. Additionally, the ALJ found that a POSITA would have had "reason to combine Yare with Larson to obtain the claimed film having anti-reflection properties with a reasonable expectation of success" as recited in claim 10. *Id.*, 287.

V. THERE ARE NO SECONDARY CONSIDERATIONS OF NONOBVIOUSNESS

MRI has failed to establish that any secondary considerations of nonobviousness exist or that they have a nexus to the Challenged Claims. Indeed, in the ITC proceeding, the ALJ found MRI's alleged secondary considerations were "not entitled to significant weight." *Id.*, 288.

A. Long Felt Need, Failure, and Copying

MRI fails to identify any evidence of a long-felt but unmet need that has any nexus to the Challenged Claims. While MRI claims that there was a need for outdoor displays with cooling technology (POR, 53–54), the claims are not limited to outdoor displays. *See ABT Sys., LLC v. Emerson Elec. Co.*, 797 F.3d 1350, 1362 (Fed. Cir. 2015) (rejecting argument of long-felt need that "ignores the scope of claim 1, which does not set forth limits on how long or how often periodic fan operation is to be performed"). Moreover, MRI does not set forth how the Challenged Claims satisfy any alleged unsolved need, given that prior art such as Karppanen and Yare disclosed cooling systems for outdoor displays. *See* Ex. 1030, 289–90 (rejecting MRI's similar long-felt need argument).

MRI also has not established any failure of others. First, there is no evidence that Samsung failed. Sung Ki Kim's testimony that Samsung started [redacted] around 2005 but did not [redacted] until 2010–2012 does not establish "a decade of failures." *See* POR, 54–55 (citing Ex. 2029, 45:22–47:22);

Ex. 1030, 290 ("[T]he evidence regarding 'failure by others' is unpersuasive."). There is no evidence that Samsung worked on the display continuously during that time or that it had any difficulties. Second, MRI has not established that "these prior attempts failed because the devices lacked the claimed features." *Ormco Corp. v. Align Tech., Inc.*, 463 F.3d 1299, 1313 (Fed. Cir. 2006).

MRI's citation of a Samsung slide deck and photographs that include comparative analysis of [redacted] do not establish copying. POR, 59 (citing Exs. 2042, 2043). Indeed, MRI has not identified any features of the [redacted] that Samsung allegedly copied. *Iron Grip Barbell Co., Inc. v. USA Sports, Inc.*, 392 F.3d 1317, 1325 (Fed. Cir. 2004) ("copying requires the replication of a specific product"). Moreover, by the time of Samsung's competitor analysis of [redacted], Samsung had already fully designed the cooling scheme for its products. Ex. 1035, 612:11–13, 613:14–25, 614:1–18; Ex. 2040 (showing sales of [redacted] units in 2016); Ex. 2042, 65 (showing photographs and test results of Samsung OH55F and OH85F). While MRI asserts that Samsung disassembled [redacted] in "early 2016," Samsung engineer Sungsu Lee testified that the March 24, 2016 date on the slide deck cover is incorrect, as confirmed by a photograph of the [redacted] within the slide deck that indicates an October 2016 manufacturing date. Ex. 1035, 611:23–612:10 (Lee); Ex. 2042, 34, 69; Ex. 1030, 292. Moreover, comparative product analysis is a common

industry practice. Ex. 1035, 611:6–22; Ex. 1030, 292 n. 117 ("a tear-down of another company's product is not unusual."); Ex. 1036, 159:10–24. Accordingly, there is no evidence of copying.

B. Commercial Success

MRI did not prove a nexus between the alleged commercial success of its own or Samsung's products and the Challenged Claims, nor is it entitled to a presumption of nexus. A rebuttable presumption of nexus arises only where "the patentee shows that the asserted objective evidence is tied to a specific product and that product embodies the claimed features, and is coextensive with them." *Fox Factory, Inc. v. SRAM, LLC*, 944 F.3d 1366, 1373 (Fed. Cir. 2019) (cleaned up). "[I]f the patented invention is only a component of a commercially successful machine or process, the patentee is not entitled to a presumption of nexus." *Id.* (cleaned up).

MRI's conclusory claims of coextensiveness should be rejected. POR, 56, 58. Coextensiveness requires more than a showing that the claims cover a product practicing the patents. *Fox Factory*, 944 F.3d at 1377 (rejecting "attempt to reduce the coextensiveness requirement to an inquiry into whether the patent claims broadly cover the product that is the subject of the evidence of secondary considerations."). Whether a product is coextensive with the patent depends on, among other things, the significance of unclaimed features. *Id.* at 1374–75. Neither MRI nor its expert has undertaken such an analysis.

As the ALJ found, both Samsung's and MRI's products have numerous unclaimed features. Ex. 1030, 296–97. Indeed, Samsung's marketing documents identify a number of "features" and "highlights" such as "Magic Protection Glass," "Slim Design," "IP56" certification, "excellent visibility" with a high contrast ratio, and "Remote Management." *See, e.g.*, Exs. 1037, 1038. Likewise, MRI's products identify a number of features unrelated to the Challenged Claims such as "Unsurpassed Image Quality," "Extreme Outdoor Durability," "Intelligent Self-Optimization," and "IoT Empowered Architecture." *See e.g.*, Ex. 1039. These features are important to customers and drive sales. Ex. 1040, 312:4–314:22, 316:16–321:4. Accordingly, these products are not coextensive with the Challenged Claims.

For these reasons, MRI has also failed to present evidence sufficient to establish that sales of its own or Samsung's products are attributable to the features of the Challenged Claims. *See Ormco*, 463 F.3d at 1312 ("[I]f the commercial success is due to an unclaimed feature of the device, the commercial success is irrelevant."). Further, MRI's broad statement that its "sales increased…shortly after the claimed priority date of the '142 Patent" does not "confirm[] the commercial success is tied to the novel aspects of the '142 Patent." POR, 59. While the '142 patent issued in 2021, MRI relies on sales dating back to 2008. MRI did nothing to show that any alleged increase in sales starting in 2008 was related to the products

it claims are coextensive. It also did nothing to show that technical aspects of the Challenged Claims were implemented during that time causing the alleged increase in sales. MRI also has not offered any evidence regarding MRI or Samsung's market share aside from a single document regarding Samsung's *global* market share, which includes Samsung products beyond those that MRI alleges practice the Challenged Claims. *See* POR, 60–61 (citing Ex. 2041, 29–30). This is insufficient to demonstrate commercial success. Accordingly, there is no nexus between sales of MRI's or Samsung's products and the alleged inventions. *See* Ex. 1030, 295.

C. Industry Praise and Licensing

MRI relies on Romulus Stoain's April 24, 2020 generic email to Samsung SDS (POR, 63) to allege industry praise, but this email does not identify any specific technical feature of MRI's products, let alone a specific product that embodies, and is coextensive with, the elements of the Challenged Claims. *See* Ex. 1030, 293–94; Paper 11, 68–72. Samsung's white paper (POR, 62–63) likewise fails to praise, or even mention, MRI. Ex. 2025. MRI also mischaracterizes the testimony of John Palmer, the corporate representative of a Samsung customer, whose "testimony does not indicate whether it is the patented features of the cooling system, as opposed to other aspects of the liquid crystal display, that creates the desirable effect." Ex. 1030, 298.

MRI fails to establish a nexus for the licenses it cites. *See* POR, 64. The licenses either fail to mention the [redacted]. *See id.* (citing Exs. 2049, 2051, 2052); *Shoes by Firebug LLC v. Stride Rite Children's Grp., LLC*, 962 F.3d 1362, 1372–73 (Fed. Cir. 2020) ("Because the licenses include numerous intellectual property rights in addition to the '038 and '574 patents, the agreements on their face do not establish a nexus . . .").

VI. MR. SMITH-GILLESPIE'S TESTIMONY IS ENTITLED TO WEIGHT

MRI argues that Mr. Smith-Gillespie's testimony should be given little weight based on alleged errors and inconsistencies. POR, 16–18. MRI is incorrect, and the two cases that it cites do not support its request.

First, MRI's attempt to attribute alleged "basic scientific errors" to Mr. Smith-Gillespie is disingenuous at best. Mr. Smith-Gillespie has the requisite knowledge and experience in thermal management, as explained in his declaration and CV. *See* Ex. 1002, § I.B; Ex. 1003. MRI identifies one statement from Mr. Smith-Gillespie's declaration filed in the '740 IPR that it asserts is incorrect, and in doing so MRI misconstrues Mr. Smith-Gillespie's opinion. Mr. Smith-Gillespie did not testify that fans alone reduce the temperature of ambient air. Rather, Karppanen's use of cooling fans 36 contribute to a reduction in the temperature of the ambient air within Karppanen's system. *See* Ex. 1004, 7:21–25.

Second, there are no inconsistencies in Mr. Smith-Gillespie's definition of a POSITA as reflected in his declaration. *See* Ex. 1002, ¶ 39. And nothing in his deposition contradicts that testimony. Ex. 2022, 72:2–73:7.

Finally, neither of the cases MRI cites support giving "little weight" to Mr. Smith-Gillespie's testimony here. *See Fanduel, Inc. v. Interactive Games LLC*, 966 F.3d 1334, 1343–44 (Fed. Cir. 2020) (holding "there was no need for the Board to rely on an expert to corroborate its reading of the asserted disclosures"); *Yorkey v. Diab*, 601 F.3d 1279, 1284 (Fed. Cir. 2010) (noting that "the Board was well within its discretion to give more credibility to [one expert's testimony] unless no reasonable trier of fact could have done so.").

VII. CONCLUSION

Samsung respectfully requests that the Board find all Challenged Claims unpatentable.

Respectfully submitted,
GOODWIN PROCTER LLP

By: /Sanjeet K. Dutta/

Sanjeet K. Dutta (Reg. No. 46,145)
Goodwin Procter LLP
601 Marshall Street
Redwood City, CA 94063
Email: sdutta@goodwinlaw.com
Tel: (650) 752-3100
Fax: (650) 853-1038

Dated: December 19, 2023

Counsel for Petitioners

CERTIFICATE OF WORD COUNT

Pursuant to 37 C.F.R. § 42.24(d), the undersigned certifies that the foregoing Petitioners' Reply to Patent Owner's Response complies with the type-volume limits of 37 C.F.R. § 42.24(c) because it contains 5,574 words according to the word-processing system used to prepare this reply, excluding the words in the Table of Contents, Table of Authorities, Table of Exhibits, Certification Under § 42.24(d), and Certificate of Service, as set forth in 37 C.F.R. § 42.24(c).

Date: December 19, 2023

Respectfully submitted,
GOODWIN PROCTER LLP

By: /Sanjeet K. Dutta/

Sanjeet K. Dutta (Reg. No. 46,145)
Goodwin Procter LLP
601 Marshall Street
Redwood City, CA 94063
Email: sdutta@goodwinlaw.com
Tel: (650) 752-3100
Fax: (650) 853-1038

Counsel for Petitioners

CERTIFICATE OF SERVICE

A copy of this Petitioners' Reply to Patent Owner's Response together with the additional exhibits identified in the above Table of Exhibits have been served on counsel for Patent Owner upon the following addresses as listed in Patent Owner's Mandatory Notices:

John C. Alemanni – jalemanni@kilpatricktownsend.com

Carl Sanders – csanders@kilpatricktownsend.com

Michael T. Morlock – mmorlock@kilpatricktownsend.com

Courtney Dabbiere – cdabbiere@kilpatricktownsend.com

Dated: December 19, 2023

Respectfully submitted,
GOODWIN PROCTER LLP

By: /*Sanjeet K. Dutta*/
Sanjeet K. Dutta (Reg. No. 46,145)
Goodwin Procter LLP
601 Marshall Street
Redwood City, CA 94063
Email: sdutta@goodwinlaw.com
Tel: (650) 752-3100
Fax: (650) 853-1038

Counsel for Petitioners