ETSI EN 302 307 V1.1.2 (2006-06)

European Standard (Telecommunications series)

Digital Video Broadcasting (DVB); Second generation framing structure, channel coding and modulation systems for Broadcasting, Interactive Services, News Gathering and other broadband satellite applications

European Broadcasting Union Union Européenne de Radio-Télévision

EBU·UER

DVB Digital Video Broadcasting

ETSI

Reference
REN/JTC-DVB-196

Keywords
BSS, modulation

ETSI

650 Route des Lucioles
F-06921 Sophia Antipolis Cedex - FRANCE

Tel.: +33 4 92 94 42 00 Fax: +33 4 93 65 47 16

Siret N° 348 623 562 00017 - NAF 742 C
Association à but non lucratif enregistrée à la
Sous-Préfecture de Grasse (06) N° 7803/88

Important notice

Individual copies of the present document can be downloaded from:
http://www.etsi.org

The present document may be made available in more than one electronic version or in print. In any case of existing or perceived difference in contents between such versions, the reference version is the Portable Document Format (PDF). In case of dispute, the reference shall be the printing on ETSI printers of the PDF version kept on a specific network drive within ETSI Secretariat.

Users of the present document should be aware that the document may be subject to revision or change of status. Information on the current status of this and other ETSI documents is available at
http://portal.etsi.org/tb/status/status.asp

If you find errors in the present document, please send your comment to one of the following services:
http://portal.etsi.org/chaircor/ETSI_support.asp

Copyright Notification

No part may be reproduced except as authorized by written permission.
The copyright and the foregoing restriction extend to reproduction in all media.

© European Telecommunications Standards Institute 2006.
© European Broadcasting Union 2006.
All rights reserved.

DECT™, **PLUGTESTS**™ and **UMTS**™ are Trade Marks of ETSI registered for the benefit of its Members.
TIPHON™ and the **TIPHON logo** are Trade Marks currently being registered by ETSI for the benefit of its Members.
3GPP™ is a Trade Mark of ETSI registered for the benefit of its Members and of the 3GPP Organizational Partners.

Contents

Intellectual Property Rights 5
Foreword 5
1 Scope 6
2 References 8
3 Symbols and abbreviations 9
3.1 Symbols 9
3.2 Abbreviations 10
4 Transmission system description 11
4.1 System definition 11
4.2 System architecture 12
4.3 System configurations 13
5 Subsystems specification 14
5.1 Mode adaptation 14
5.1.1 Input interface 14
5.1.2 Input stream synchronizer (optional, not relevant for single TS - BS) 15
5.1.3 Null-Packet Deletion (ACM and Transport Stream only) 15
5.1.4 CRC-8 encoder (for packetized streams only) 15
5.1.5 Merger/Slicer 16
5.1.6 Base-Band Header insertion 17
5.2 Stream adaptation 18
5.2.1 Padding 19
5.2.2 BB scrambling 19
5.3 FEC encoding 19
5.3.1 Outer encoding (BCH) 20
5.3.2 Inner encoding (LDPC) 21
5.3.2.1 Inner coding for normal FECFRAME 22
5.3.2.2 Inner coding for short FECFRAME 23
5.3.3 Bit Interleaver (for 8PSK, 16APSK and 32APSK only) 23
5.4 Bit mapping into constellation 25
5.4.1 Bit mapping into QPSK constellation 25
5.4.2 Bit mapping into 8PSK constellation 25
5.4.3 Bit mapping into 16APSK constellation 26
5.4.4 Bit mapping into 32APSK 27
5.5 Physical Layer (PL) framing 27
5.5.1 Dummy PLFRAME insertion 28
5.5.2 PL signalling 28
5.5.2.1 SOF field 29
5.5.2.2 MODCOD field 29
5.5.2.3 TYPE field 29
5.5.2.4 PLS code 29
5.5.3 Pilots insertion 30
5.5.4 Physical layer scrambling 30
5.6 Baseband shaping and quadrature modulation 32
6 Error performance 33
Annex A (normative): Signal spectrum at the modulator output 34
Annex B (normative): Addresses of parity bit accumulators for n_{ldpc} = 64 800 36
Annex C (normative): Addresses of parity bit accumulators for n_{ldpc} = 16 200 45
Annex D (normative): Additional Mode Adaptation and ACM tools 48

D.1 "ACM Command" signalling interface 48
D.2 Input stream synchronizer 48
D.3 Null-packet Deletion (normative for input transport streams and ACM)....50
D.4 BBHEADER and Merging/slicing Policy for various application areas....51
D.5 Signalling of reception quality via return channel (Normative for ACM)....52

Annex E (normative): SI and signal identification for DSNG and contribution applications 54

Annex F (normative): Backwards Compatible modes (optional)....55

Annex G (informative): Supplementary information on receiver implementation 58

G.1 Carrier recovery....58
G.2 FEC decoding....58
G.3 ACM: Transport Stream regeneration and clock recovery using ISCR 61
G.4 Non linearity pre-compensation and Intersymbol Interference suppression techniques 61
G.5 Interactive services using DVB-RCS return link: user terminal synchronization....62

Annex H (informative): Examples of possible use of the System....63

H.1 CCM digital TV broadcasting: bit rate capacity and C/N requirements 63
H.2 Distribution of multiple TS multiplexes to DTT Transmitters (Multiple TS, CCM)....65
H.3 SDTV and HDTV broadcasting with differentiated protection (VCM, Multiple TS) 66
H.4 DSNG Services using ACM (Single transport Stream, information rate varying in time) 66
H.5 IP Unicast Services (Non-uniform protection on a user-by-user basis) 67
H.6 Example performance of BC modes....69
H.7 Satellite transponder models for simulations 70
H.8 Phase noise masks for simulations 72

Annex I (informative): Bibliography....73

History 74

Intellectual Property Rights

IPRs essential or potentially essential to the present document may have been declared to ETSI. The information pertaining to these essential IPRs, if any, is publicly available for **ETSI members and non-members**, and can be found in ETSI SR 000 314: *"Intellectual Property Rights (IPRs); Essential, or potentially Essential, IPRs notified to ETSI in respect of ETSI standards"*, which is available from the ETSI Secretariat. Latest updates are available on the ETSI Web server (http://webapp.etsi.org/IPR/home.asp).

Pursuant to the ETSI IPR Policy, no investigation, including IPR searches, has been carried out by ETSI. No guarantee can be given as to the existence of other IPRs not referenced in ETSI SR 000 314 (or the updates on the ETSI Web server) which are, or may be, or may become, essential to the present document.

Foreword

This European Standard (Telecommunications series) has been produced by Joint Technical Committee (JTC) Broadcast of the European Broadcasting Union (EBU), Comité Européen de Normalisation ELECtrotechnique (CENELEC) and the European Telecommunications Standards Institute (ETSI).

The work of the JTC was based on the studies carried out by the European DVB Project under the auspices of theAd Hoc Group on DVB-S2 of the DVB Technical Module. This joint group of industry, operators and broadcasters provided the necessary information on all relevant technical matters (see bibliography).

NOTE: The EBU/ETSI JTC Broadcast was established in 1990 to co-ordinate the drafting of standards in the specific field of broadcasting and related fields. Since 1995 the JTC Broadcast became a tripartite body by including in the Memorandum of Understanding also CENELEC, which is responsible for the standardization of radio and television receivers. The EBU is a professional association of broadcasting organizations whose work includes the co-ordination of its members' activities in the technical, legal, programme-making and programme-exchange domains. The EBU has active members in about 60 countries in the European broadcasting area; its headquarters is in Geneva.

European Broadcasting Union
CH-1218 GRAND SACONNEX (Geneva)
Switzerland
Tel: +41 22 717 21 11
Fax: +41 22 717 24 81

Founded in September 1993, the DVB Project is a market-led consortium of public and private sector organizations in the television industry. Its aim is to establish the framework for the introduction of MPEG-2 based digital television services. Now comprising over 200 organizations from more than 25 countries around the world, DVB fosters market-led systems, which meet the real needs, and economic circumstances, of the consumer electronics and the broadcast industry.

National transposition dates	
Date of latest announcement of this EN (doa):	30 September 2006
Date of latest publication of new National Standard or endorsement of this EN (dop/e):	31 March 2007
Date of withdrawal of any conflicting National Standard (dow):	31 March 2007

1 Scope

DVB-S (EN 300 421 [2]) was introduced as a standard in 1994 and DVB-DSNG (EN 301 210 [3]) in 1997. The DVB-S standard specifies QPSK modulation and concatenated convolutional and Reed-Solomon channel coding, and is now used by most satellite operators worldwide for television and data broadcasting services. DVB-DSNG specifies, in addition to DVB-S format, the use of 8PSK and 16QAM modulation for satellite news gathering and contribution services.

Since 1997, digital satellite transmission technology has evolved somewhat:

- New channel coding schemes, combined with higher order modulation, promise more powerful alternatives to the DVB-S/DVB-DSNG coding and modulation schemes. The result is a capacity gain in the order of 30 % at a given transponder bandwidth and transmitted EIRP, depending on the modulation type and code rate.
- Variable Coding and Modulation (VCM) may be applied to provide different levels of error protection to different service components (e.g. SDTV and HDTV, audio, multimedia).
- In the case of interactive and point-to-point applications, the VCM functionality may be combined with the use of return channels, to achieve Adaptive Coding and Modulation (ACM). This technique provides more exact channel protection and dynamic link adaptation to propagation conditions, targeting each individual receiving terminal. ACM systems promise satellite capacity gains of up to 100 %-200 %. In addition, service availability may be extended compared to a constant protection system (CCM) such as DVB-S or DVB-DSNG. Such gains are achieved by informing the satellite up-link station of the channel condition (e.g. C/N+I) of each receiving terminal via the satellite or terrestrial return channels.
- DVB-S and DVB-DSNG are strictly focused on a unique data format, the MPEG Transport Stream (ISO/IEC 13818-1 [1] or a reference to it). Extended flexibility to cope with other input data formats (such as multiple Transport Streams, or generic data formats) is now possible without significant complexity increase.

The present document defines a "second generation" modulation and channel coding system (denoted the "System" or "DVB-S2" for the purposes of the present document) to make use of the improvements listed above. DVB-S2 is a single, very flexible standard, covering a variety of applications by satellite, as described below. It is characterized by:

- A flexible input stream adapter, suitable for operation with single and multiple input streams of various formats (packetized or continuous);
- a powerful FEC system based on LDPC (Low-Density Parity Check) codes concatenated with BCH codes, allowing Quasi-Error-Free operation at about 0,7dB to 1 dB from the Shannon limit, depending on the transmission mode (AWGN channel, modulation constrained Shannon limit);
- a wide range of code rates (from 1/4 up to 9/10); 4 constellations, ranging in spectrum efficiency from 2 bit/s/Hz to 5 bit/s/Hz, optimized for operation over non-linear transponders;
- a set of three spectrum shapes with roll-off factors 0,35, 0,25 and 0,20;
- Adaptive Coding and Modulation (ACM) functionality, optimizing channel coding and modulation on a frame-by-frame basis.

The System has been optimized for the following **broadband satellite applications:**

Broadcast Services (BS) Digital multi-programme Television (TV)/High Definition Television (HDTV)

Broadcasting services to be used for primary and secondary distribution in the Fixed Satellite Service (FSS) and the Broadcast Satellite Service (BSS) bands.

DVB-S2 is intended to provide Direct-To-Home (DTH) services for consumer Integrated Receiver Decoder (IRD), as well as collective antenna systems (Satellite Master Antenna Television - SMATV) and cable television head-end stations (possibly with remodulation, see EN 300 429 [6]). DVB-S2 may be considered a successor to the current DVB-S standard EN 300 421 [2], and may be introduced for new services and allow for a long-term migration. BS services are transported in MPEG Transport Stream format. VCM may be applied on multiple transport stream to achieve a differentiated error protection for different services (TV, HDTV, audio, multimedia). Two modes are available:

- **NBC-BS** (Non Backwards Compatible Broadcast Services) is not backwards-compatible with EN 300 421 [2].
- **BC-BS** (Backwards-Compatible Broadcast Services) is backwards-compatible to EN 300 421 [2] (see annex F).

In fact, with a large number of DVB-S receivers already installed, backwards compatibility may be required for a period of time, where old receivers continue to receive the same capacity as before, while the new DVB-S2 receivers could receive additional capacity broadcasts. When the complete receiver population has migrated to DVB-S2, the transmitted signal can be modified to a non-backward compatible mode, thus exploiting the full potential of DVB-S2. To facilitate the reception of DVB-S services by DVB-S2 receivers, implementation of DVB-S in DVB-S2 chips is highly recommended.

Interactive Services (IS) Interactive data services including Internet access

DVB-S2 is intended to provide interactive services to consumer IRDs and to personal computers, where DVB-S2's forward path supersedes the current DVB-S standard EN 300 421 [2] for interactive systems. The return path can be implemented using various DVB interactive systems, such as DVB-RCS (EN 301 790 [7]), DVB-RCP (ETS 300 801 [8]), DVB-RCG (EN 301 195 [9]), DVB-RCC (ES 200 800 [10]). Data services are transported in (single or multiple) Transport Stream format according to EN 301 192 [5] (e.g. using Multiprotocol Encapsulation), or in (single or multiple) generic stream format. DVB-S2 can provide Constant Coding and Modulation (CCM), or Adaptive Coding and Modulation (ACM), where each individual satellite receiving station controls the protection mode of the traffic addressed to it. Input Stream Adaptation for ACM is specified in annex D.

Digital TV Contribution and Satellite News Gathering (DTVC/DSNG)

Digital television contribution applications by satellite consist of point-to-point or point-to-multipoint transmissions, connecting fixed or transportable uplink and receiving stations. They are not intended for reception by the general public. According to ITU-R Recommendation SNG.770-1 [11], SNG is defined as "Temporary and occasional transmission with short notice of television or sound for broadcasting purposes, using highly portable or transportable uplink earth stations ...". Services are transported in single (or multiple) MPEG Transport Stream format. DVB-S2 can provide Constant Coding and Modulation (CCM), or Adaptive Coding and Modulation (ACM). In this latter case, a single satellite receiving station typically controls the protection mode of the full multiplex. Input Stream Adaptation for ACM is specified in annex D.

Data content distribution/trunking and other professional applications (PS)

These services are mainly point-to-point or point-to-multipoint, including interactive services to professional head-ends, which re-distribute services over other media. Services may be transported in (single or multiple) generic stream format. The system can provide Constant Coding and Modulation (CCM), Variable Coding and Modulation (VCM) or Adaptive Coding and Modulation (ACM). In this latter case, a single satellite receiving station typically controls the protection mode of the full TDM multiplex, or multiple receiving stations control the protection mode of the traffic addressed to each one. In either case, interactive or non-interactive, the present document is only concerned with the forward broadband channel.

DVB-S2 is suitable for use on different satellite transponder bandwidths and frequency bands. The symbol rate is matched to given transponder characteristics, and, in the case of multiple carriers per transponder (FDM), to the frequency plan adopted. Examples of possible DVB-S2 use are given in clause H.1.

Digital transmissions via satellite are affected by power and bandwidth limitations. Therefore DVB-S2 provides for many transmission modes (FEC coding and modulations), giving different trade-offs between power and spectrum efficiency (see annex H.1). For some specific applications (e.g. broadcasting) modes such as QPSK and 8PSK, with their quasi-constant envelope, are appropriate for operation with saturated satellite power amplifiers (in single carrier per transponder configuration). When higher power margins are available, spectrum efficiency can be further increased to reduce bit delivery cost. In these cases also 16APSK and 32APSK can operate in single carrier mode close to the satellite HPA saturation by pre-distortion techniques. All the modes are appropriate for operation in quasi-linear satellite channels, in multi-carrier Frequency Division Multiplex (FDM) type applications.

DVB-S2 is compatible with Moving Pictures Experts Group (MPEG-2 and MPEG-4) coded TV services (see ISO/IEC 13818-1 [1]), with a Transport Stream packet multiplex. Multiplex flexibility allows the use of the transmission capacity for a variety of TV service configurations, including sound and data services. All service components are Time Division Multiplexed (TDM) on a single digital carrier.

The present document:

- gives a general description of the DVB-S2 system;
- specifies the digitally modulated signal in order to allow compatibility between pieces of equipment developed by different manufacturers. This is achieved by describing in detail the signal processing principles at the modulator side, while the processing at the receive side is left open to different implementation solutions. However, it is necessary in the present document to refer to certain aspects of reception;
- identifies the global performance requirements and features of the System, in order to meet the service quality targets.

2 References

The following documents contain provisions which, through reference in this text, constitute provisions of the present document.

- References are either specific (identified by date of publication and/or edition number or version number) or non-specific.
- For a specific reference, subsequent revisions do not apply.
- For a non-specific reference, the latest version applies.

Referenced documents which are not found to be publicly available in the expected location might be found at http://docbox.etsi.org/Reference.

[1] ISO/IEC 13818 (parts 1 and 2): "Information technology - Generic coding of moving pictures and associated audio information".

[2] ETSI EN 300 421 (V.1.1.2): "Digital Video Broadcasting (DVB); Framing structure, channel coding and modulation for 11/12 GHz satellite services".

[3] ETSI EN 301 210: "Digital Video Broadcasting (DVB); Framing structure, channel coding and modulation for Digital Satellite News Gathering (DSNG) and other contribution applications by satellite".

[4] ETSI TR 101 154: "Digital Video Broadcasting (DVB); Implementation guidelines for the use of MPEG-2 Systems, Video and Audio in satellite, cable and terrestrial broadcasting applications".

[5] ETSI EN 301 192: "Digital Video Broadcasting (DVB); DVB specification for data broadcasting".

[6] ETSI EN 300 429: "Digital Video Broadcasting (DVB); Framing structure, channel coding and modulation for cable systems".

[7] ETSI EN 301 790: "Digital Video Broadcasting (DVB); Interaction channel for satellite distribution systems".

[8] ETSI ETS 300 801: "Digital Video Broadcasting (DVB); Interaction channel through Public Switched Telecommunications Network (PSTN)/ Integrated Services Digital Networks (ISDN)".

[9] ETSI EN 301 195: "Digital Video Broadcasting (DVB); Interaction channel through the Global System for Mobile communications (GSM)".

[10] ETSI ES 200 800: "Digital Video Broadcasting (DVB); DVB interaction channel for Cable TV distribution systems (CATV)".

[11] ITU-R Recommendation SNG.770-1: "Uniform operational procedures for satellite news gathering (SNG)".

[12] ETSI ETS 300 802: "Digital Video Broadcasting (DVB); Network-independent protocols for DVB interactive services".

3 Symbols and abbreviations

3.1 Symbols

For the purposes of the present document, the following symbols apply:

α	Roll-off factor
γ	Ratio between constellation radii for 16APSK and 32APSK
c	codeword
C/N	Carrier-to-noise power ratio (N measured in a bandwidth equal to symbol rate)
C/N+I	Carrier-to-(Noise+Interference) ratio
$d_{n_{bch}-k_{bch}-1}, d_{n_{bch}-k_{bch}-2}, ..., d_1, d_0$	BCH code redundancy bits
d(x)	BCH code remainder of the division between the generator polynomial and $x^{n_{bch}-k_{bch}} m(x)$
DFL	Data Field Length
dmin	LDPC code minimum distance
E_b/N_0	Ratio between the energy per information bit and single sided noise power spectral density
E_s/N_0	Ratio between the energy per transmitted symbol and single sided noise power spectral density
f_N	Nyquist frequency
f_0	Carrier frequency
G	PLS code generator matrix
g(x)	code generator polynomial
$g_1(x), g_2(x), \ldots, g_{12}(x)$	polynomials to obtain BCH code generator polynomial
i	LDPC code information block
$i_0, i_1, ..., i_{k_{ldpc}-1}$	LDPC code information bits
H(f)	RC filters frequency transfer function
$H_{(n-k)xn}$	LDPC code parity check matrix
I, Q	In-phase, Quadrature phase components of the modulated signal
K_{bch}	number of bits of BCH uncoded Block
N_{bch}	number of bits of BCH coded Block
k_{ldpc}	number of bits of LDPC uncoded Block
n_{ldpc}	number of bits of LDPC coded Block
η	PLFRAMING efficiency
η_c	code efficiency
η_{MOD}	number of transmitted bits per constellation symbol
η_{tot}	System spectral efficiency
m	BCH code information word
m(x)	BCH code message polynomial
$m_{k_{bch}-1}, m_{k_{bch}-2}, ..., m_1, m_0$	BCH code information bits
M	number of modulated symbols in SLOT
$p_0, p_1, ... p_{n_{ldpc}-k_{ldpc}-1}$	LDPC code parity bits
P	number of pilot symbols in a pilot block
q	code rate dependant constant for LDPC codes
θ	deviation angle in hierarchical constellations
r_m	In-band ripple (dB)
R_s	Symbol rate corresponding to the bilateral Nyquist bandwidth of the modulated signal

R_u	Useful bit rate at the DVB-S2 system input
S	Number of Slots in a XFECFRAME
T_s	Symbol period

3.2 Abbreviations

For the purposes of the present document, the following abbreviations apply:

16APSK	16-ary Amplitude and Phase Shift Keying
32APSK	32-ary Amplitude and Phase Shift Keying
8PSK	8-ary Phase Shift Keying
ACM	Adaptive Coding and Modulation
ASI	Asynchronous Serial Interface
AWGN	Additive White Gaussian Noise
BB	BaseBand
BC	Backwards-Compatible

NOTE: Referred to the system allowing partial stream reception by DVB-S receivers.

BCH	Bose-Chaudhuri-Hocquenghem multiple error correction binary block code
BER	Bit Error Ratio
B_S	Bandwidth of the frequency Slot allocated to a service
BS	Broadcast Service
BSS	Broadcast Satellite Service
BW	BandWidth (at -3 dB) of the transponder
CBR	Constant Bit Rate
CCM	Constant Coding and Modulation
CNI	Carrier to Noise plus Interference ratio
CRC	Cyclic Redundancy Check
D	Decimal notation
DD	Decision Directed
DEMUX	DEMUltipleXer
DF	Data Field
DNP	Deleted Null Packets
DSNG	Digital Satellite News Gathering
DTH	Direct To Home
DTT	Digital Terrestrial Television
DVB	Digital Video Broadcasting project
DVB-S	DVB System for satellite broadcasting specified in EN 300 421
DVB-S2	DVB-S2 System as specified in the present document.
EBU	European Broadcasting Union
EN	European Norm
FDM	Frequency Division Multiplex
FEC	Forward Error Correction
FIFO	First In First Out
FSS	Fixed Satellite Service
GF	Galois Field
GS	Generic Stream
HDTV	High Definition TeleVision
HEX	HEXadecimal notation
HP	High Priority
IBO	Input Back Off
IF	Intermediate Frequency
IMUX	Input MUltipleXer - filter
IRD	Integrated Receiver Decoder
IS	Interactive Services
ISCR	Input Stream Time Reference
ISI	Input Stream Identifier
ISSY	Input Stream SYnchronizer
ISSYI	Input Stream SYnchronizer Indicator

ITU	International Telecommunications Union
LDPC	Low Density Parity Check (codes)
LNB	Low Noise Block
LP	Low Priority
LSB	Least Significant Bit
MIS	Multiple Input Stream
MPE	Multi-Protocol Encapsulation
MPEG	Moving Pictures Experts Group
MSB	Most Significant Bit

NOTE: In DVB-S2 the MSB is always transmitted first.

NBC	Non-Backwards-Compatible
MUX	MUltipleX
NA	Not Applicable
OBO	Output Back Off
OCT	OCTal notation
OMUX	Output MUltipleXer - filter
NP	Null Packets
NPD	Null-Packet Deletion
PER	(MPEG TS) Packet Error Rate
PID	Packet IDentifier
PL	Physical Layer
PLL	Phase-Locked Loop
PLS	Physical Layer Signalling
PS	Professional Services
PSK	Phase Shift Keying
PRBS	Pseudo Random Binary Sequence
QEF	Quasi-Error-Free
QPSK	Quaternary Phase Shift Keying
RF	Radio Frequency
RO	Roll-Off
SDTV	Standard Definition TeleVision
SIS	Single Input Stream
SNG	Satellite News Gathering
SMATV	Satellite Master Antenna TeleVision
SOF	Start Of Frame
TDM	Time Division Multiplex
TS	Transport Stream
TV	TeleVision
TWTA	Travelling Wave Tube Amplifier
UPL	User Packet Length
VCM	Variable Coding and Modulation

4 Transmission system description

4.1 System definition

The System is defined as the functional block of equipment performing the adaptation of the baseband digital signals, from the output of a single (or multiple) MPEG transport stream multiplexer(s) (ISO/IEC 13818-1 [1]), or from the output of a single (or multiple) generic data source(s), to the satellite channel characteristics. The System is designed to support source coding as defined in ISO/IEC 13818 [1], TR 101 154 [4] and TS 102 005 (see bibliography). Data services may be transported in Transport Stream format according to EN 301 192 [5] (e.g. using Multi-protocol Encapsulation), or Generic Stream format.

If the received signal is above the C/N+I threshold, the Forward Error Correction (FEC) technique adopted in the System is designed to provide a "Quasi Error Free" (QEF) quality target. The definition of QEF adopted for DVB-S2 is "less than one uncorrected error-event per transmission hour at the level of a 5 Mbit/s single TV service decoder", approximately corresponding to a Transport Stream Packet Error Ratio PER< 10^{-7} before de-multiplexer.

4.2 System architecture

According to figure 1, the DVB-S2 System shall be composed of a sequence of functional blocks as described below.

Mode adaptation shall be application dependent. It shall provide input stream interfacing, Input Stream Synchronization (optional), null-packet deletion (for ACM and Transport Stream input format only), CRC-8 coding for error detection at packet level in the receiver (for packetized input streams only), merging of input streams (for Multiple Input Stream modes only) and slicing into DATA FIELDs. For Constant Coding and Modulation (CCM) and single input Transport Stream, Mode Adaptation shall consist of a "transparent" DVB-ASI (or DVB-parallel) to logical-bit conversion and CRC-8 coding. For Adaptive Coding and Modulation (ACM), Mode Adaptation shall be according to annex D.

A Base-Band Header shall be appended in front of the Data Field, to notify the receiver of the input stream format and Mode Adaptation type. To be noted that the MPEG multiplex transport packets may be asynchronously mapped to the Base-Band Frames.

Stream adaptation shall be applied, to provide padding to complete a Base-Band Frame and Base-Band Scrambling.

Forward Error Correction (FEC) Encoding shall be carried out by the concatenation of BCH outer codes and LDPC (Low Density Parity Check) inner codes (rates 1/4, 1/3, 2/5, 1/2, 3/5, 2/3, 3/4, 4/5, 5/6, 8/9, 9/10). Depending on the application area, the FEC coded block shall have length n_{ldpc}= 64 800 bits or 16 200 bits. When VCM and ACM is used, FEC and modulation mode may be changed in different frames, but remains constant within a frame. For Backwards Compatible modes, the bit-stream at the output of the FEC encoder shall be processed according to annex F. Bit interleaving shall be applied to FEC coded bits for 8PSK, 16APSK and 32APSK.

Mapping into QPSK, 8PSK, 16APSK and 32APSK constellations shall be applied, depending on the application area. Gray mapping of constellations shall be used for QPSK and 8PSK.

Physical layer framing shall be applied, synchronous with the FEC frames, to provide Dummy PLFRAME insertion, Physical Layer (PL) Signalling, pilot symbols insertion (optional) and Physical Layer Scrambling for energy dispersal. Dummy PLFRAMEs are transmitted when no useful data is ready to be sent on the channel. The System provides a regular physical layer framing structure, based on SLOTs of M = 90 modulated symbols, allowing reliable receiver synchronization on the FEC block structure. A slot is devoted to physical layer signalling, including Start-of-Frame delimitation and transmission mode definition. This mechanism is suitable also for VCM and ACM demodulator setting. Carrier recovery in the receivers may be facilitated by the introduction of a regular raster of pilot symbols (P = 36 pilot symbols every 16 SLOTs of 90 symbols), while a pilot-less transmission mode is also available, offering an additional 2,4 % useful capacity.

Base-Band Filtering and Quadrature Modulation shall be applied, to shape the signal spectrum (squared-root raised cosine, roll-off factors 0,35 or 0,25 or 0,20) and to generate the RF signal.

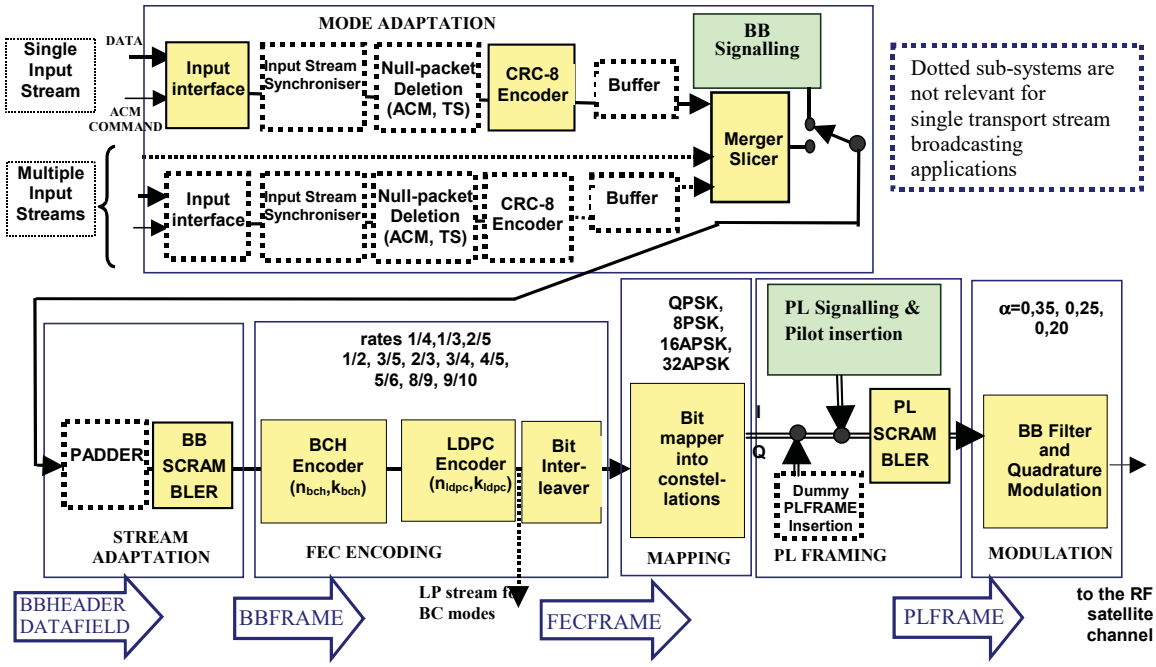

Figure 1: Functional block diagram of the DVB-S2 System

4.3 System configurations

Table 1 associates the System configurations to the applications areas. According to table 1, at least "Normative" subsystems and functionalities shall be implemented in the transmitting and receiving equipment to comply with the present document Guidelines for mode selection are given in annex H.

Table 1: System configurations and application areas

System configurations		Broadcast services	Interactive services	DSNG	Professional services
QPSK	1/4,1/3, 2/5	O	N	N	N
	1/2, 3/5, 2/3, 3/4, 4/5, 5/6, 8/9, 9/10	N	N	N	N
8PSK	3/5, 2/3, 3/4, 5/6, 8/9, 9/10	N	N	N	N
16APSK	2/3, 3/4, 4/5, 5/6, 8/9, 9/10	O	N	N	N
32APSK	3/4, 4/5, 5/6, 8/9, 9/10	O	N	N	N
CCM		N	N (see note 1)	N	N
VCM		O	O	O	O
ACM		NA	N (see note 2)	O	O
FECFRAME (normal)	64 800 (bits)	N	N	N	N
FECFRAME (short)	16 200 (bits)	NA	N	O	N
Single Transport Stream		N	N (see note 1)	N	N
Multiple Transport Streams		O	O (see note 2)	O	O
Single Generic Stream		NA	O (see note 2)	NA	O
Multiple Generic Streams		NA	O (see note 2)	NA	O
Roll-off 0,35, 0,25 and 0,20		N	N	N	N
Input Stream Synchronizer		NA except (see note 3)	O (see note 3)	O (see note 3)	O (see note 3)
Null Packet Deletion		NA	O (see note 3)	O (see note 3)	O (see note 3)
Dummy Frame insertion		NA except (see note 3)	N	N	N
N = normative, O = optional, NA = not applicable.					
NOTE 1: Interactive service receivers shall implement CCM and Single Transport Stream. NOTE 2: Interactive Service Receivers shall implement ACM at least in one of the two options: Multiple Transport Streams or Generic Stream (single/multiple input). NOTE 3: Normative for single/multiple TS input stream(s) combined with ACM/VCM or for multiple TS input streams combined with CCM.					

Within the present document, a number of configurations and mechanisms are defined as "Optional". Configurations and mechanisms explicitly indicated as "optional" within the present document, for a given application area, need not be implemented in the equipment to comply with the present document. Nevertheless, when an "optional" mode or mechanism is implemented, it shall comply with the specification as given in the present document.

5 Subsystems specification

The subsystem specification description is organized according to the functional block diagram of figure 1.

5.1 Mode adaptation

This sub-system shall perform Input Interfacing, Input Stream Synchronization (optional), Null-packet deletion (for TS input streams and ACM only), CRC-8 encoding for error detection (for packetized input streams only), input stream merging (for multiple input streams only) and input stream slicing in DATA FIELDs. Finally, base-band signalling shall be inserted, to notify the receiver of the adopted Mode Adaptation format.

According to figure 3, the input sequence(s) is (are):

- Single or multiple Transport Streams (TS).
- Single or multiple Generic Streams (packetized or continuous).

The output sequence is a BBHEADER (80 bits) followed by a DATA FIELD.

5.1.1 Input interface

The System, as defined in the present document, shall be delimited by the interfaces given in table 2.

Table 2: System interfaces

Location	Interface	Interface type	Connection	Multiplicity
Transmit station	Input	MPEG [1, 4] Transport Stream (see note 1)	from MPEG multiplexer	Single or multiple
Transmit station	Input (see note 2)	Generic Stream	From data sources	Single or multiple
Transmit station	Input (see note 3)	ACM command	From rate control unit	Single
Transmit station	Output	70/140 MHz IF, L-band IF,RF (see note 4)	to RF devices	Single or multiple
NOTE 1: For interoperability reasons, the Asynchronous Serial Interface (ASI) with 188 bytes format, data burst mode (bytes regularly spread over time) is recommended. NOTE 2: For data services. NOTE 3: For ACM only. Allows external setting of the ACM transmission mode. NOTE 4: IF shall be higher than twice the symbol rate.				

The input interface subsystem shall map the input electrical format into internal logical-bit format. The first received bit will be indicated as the Most Significant Bit (MSB).

A Transport Stream shall be characterized by User Packets (UP) of constant length UPL = 188 × 8 bits (one MPEG packet), the first byte being a Sync-byte (47_{HEX}).

A Generic Stream shall be characterized by a continuous bit-stream or a stream of constant-length User Packets (UP), with length UPL bits (maximum UPL value 64 K, UPL = 0_D means continuous stream, see clause 5.1.5). A variable length packet stream, or a constant length packet exceeding 64 kbit, shall be treated as a continuous stream.

For Generic packetized streams, if a synch-byte is the first byte of the UP, it shall be left unchanged, otherwise a sync-byte = 0_D shall be inserted before each packet, and UPL shall be increased by eight. UPL information may be derived by static modulator setting.

"ACM Command" signalling input shall allow setting, by an external "transmission mode control unit", of the transmission parameters to be adopted by the DVB-S2 modulator, for a specific portion of input data. ACM command shall be according to clause D.1.

5.1.2 Input stream synchronizer (optional, not relevant for single TS - BS)

Data processing in the DVB-S2 modulator may produce variable transmission delay on the user information. The Input Stream Synchronizer subsystem (optional) shall provide suitable means to guarantee Constant-Bit-Rate (CBR) and constant end-to-end transmission delay for packetized input streams (e.g. for Transport Streams). This process shall follow the specification given in annex D. Examples of receiver implementation are given in annex G.

5.1.3 Null-Packet Deletion (ACM and Transport Stream only)

For ACM modes and Transport Stream input data format, MPEG null-packets shall be identified (PID = 8191_D) and removed. This allows to reduce the information rate and increase the error protection in the modulator. The process is carried-out in a way that the removed null-packets can be re-inserted in the receiver in the exact place where they originally were. This process shall follow the specification given in annex D.

5.1.4 CRC-8 encoder (for packetized streams only)

If UPL = 0_D (continuous generic stream) this sub-system shall pass forward the input stream without modifications.

If UPL ≠ 0_D the input stream is a sequence of User Packets of length UPL bits, preceded by a sync-byte (the sync-byte being = 0_D when the original stream did not contain a sync-byte).

The useful part of the UP (excluding the sync-byte) shall be processed by a systematic 8-bit CRC encoder. The generator polynomial shall be:

$$g(X) = (X^5+X^4+X^3+X^2+1)(X^2+X+1)(X+1) = X^8+X^7+X^6+X^4+X^2+1$$

The CRC encoder output shall be computed as:

$$CRC = \text{remainder } [X^8\, u(X) : g(X)]$$

Where u(X) is the input sequence (UPL - 8 bits) to be systematically encoded. Figure 2 gives a possible implementation of the CRC generator by means of a shift register (Note: the register shall be initialized to all zeros before the first bit of each sequence enters the circuit). The computed CRC-8 shall replace the sync-byte of the following UP. As described in clause 5.1.6, the sync-byte is copied into the SYNC field of the BBHEADER for transmission.

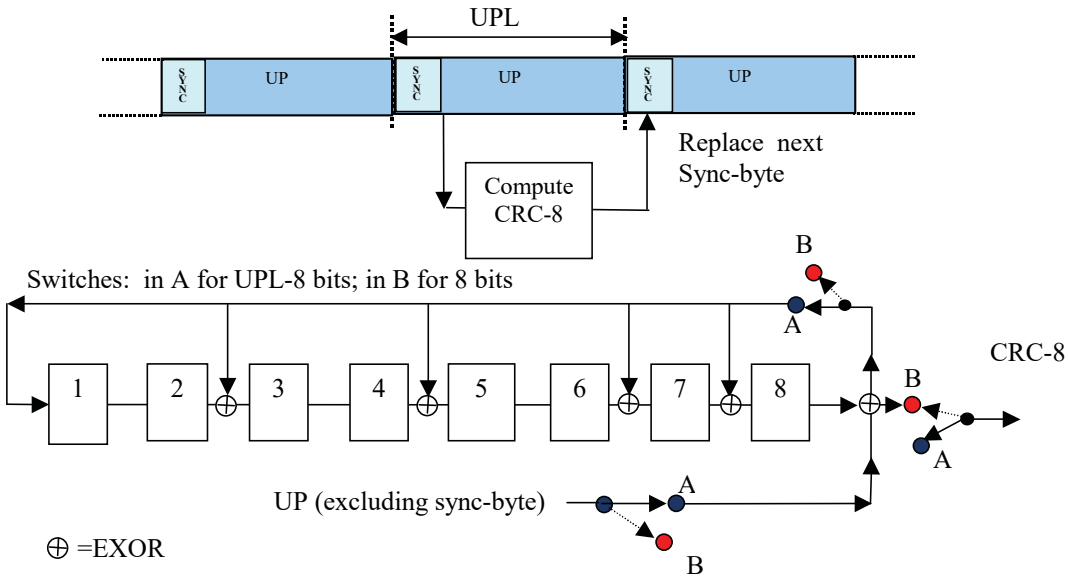

Figure 2: Implementation of the CRC-8 encoder

5.1.5 Merger/Slicer

According to figure 3, the Merger/Slicer input stream(s) is (are) organised as Generic continuous Stream(s) or Packetized Input Stream(s). The UP length is UPL bits (where UPL = 0 means continuous sequence). The input stream(s) shall be buffered until the Merger/Slicer may read them.

The Slicer shall read (i.e. slice) from its input (single input stream), or from one of its inputs (multiple input streams) a DATA FIELD, composed of DFL bits (Data Field Length), where:

K_{bch} -(10x8) ≥ DFL ≥0 (K_{bch} as per table 5**,** 80 bits are dedicated to the BBHEADER, see clause 5.1.6).

The Merger shall concatenate, in a single output, different data fields read and sliced from one of its inputs. In presence of a single stream, only the slicing functionality applies.

A DATA FIELD shall be composed of bits taken from a single input port and shall be transmitted in a homogeneous transmission mode (FEC code and modulation). The Merger/Slicer prioritization policies are application dependent and shall follow the strategies described in table 4 (Single Transport Stream Broadcast services) and in table D.2 (for other application areas).

Depending on the applications, the Merger/Slicer shall either allocate a number of input bits equal to the maximum DATAFIELD capacity (DFL = K_{bch} -80), thus breaking UPs in subsequent DATAFIELDs, or shall allocate an integer number of UPs within the DATAFIELD, making the DFL variable within the above specified boundaries.

When a DATA FIELD is not available at the merger/slicer request on any input port, the Physical Layer Framing sub-system shall generate and transmit a DUMMY PLFRAME (see clause 5.5.1 and table 12).

After Sync-byte replacing by CRC-8 (see clause 5.1.4), it is necessary to provide the receiver a method to recover UP synchronization (when the receiver is already synchronized to the DATA FIELD). Therefore the number of bits from the beginning of the DATA FIELD and the beginning of the first complete UP (first bit of the CRC-8) (see figure 3) shall be detected by the Merger/Slicer and stored in SYNCD field (i.e. SYNC Distance) of the Base-Band Header (see clause 5.1.6). For example, SYNCD = 0_D means that the first USER PACKET is aligned to the DATA FIELD.

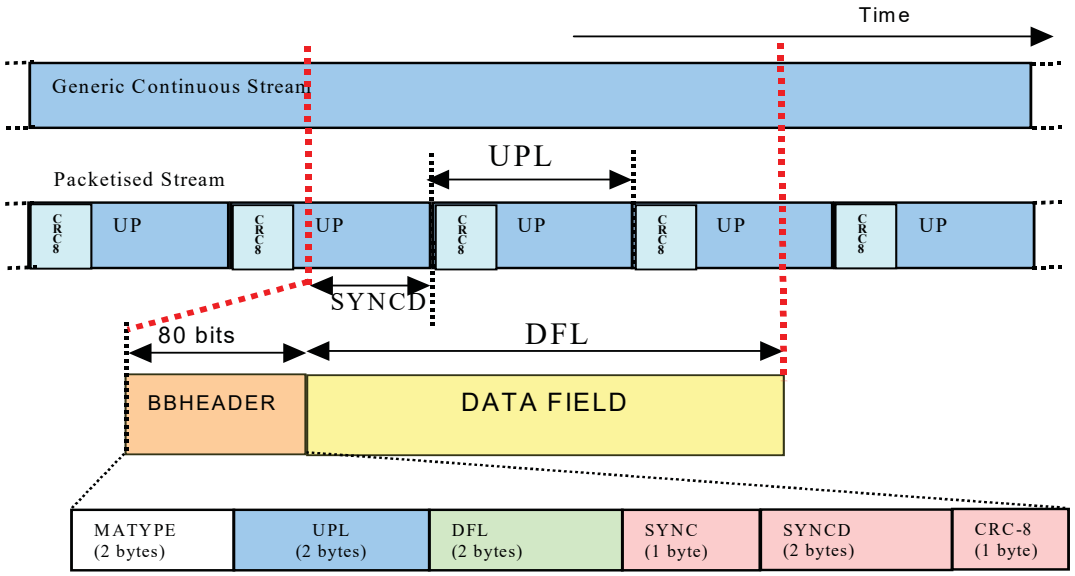

Figure 3: Stream format at the output of the MODE ADAPTER

5.1.6 Base-Band Header insertion

A fixed length base-band Header (BBHEADER) of 10 bytes shall be inserted in front of the DATA FIELD, describing its format (the maximum efficiency loss introduced by the BBHEADER is 0,25 % for n_{ldpc} = 64 800 and 1 % for n_{ldpc} = 16 200 assuming inner code rate 1/2).

MATYPE (2 bytes): describes the input stream(s) format, the type of Mode Adaptation and the transmission Roll-off factor, as explained in table 3.

First byte (MATYPE-1):

- TS/GS field (2 bits): Transport Stream Input or Generic Stream Input (packetized or continuous).
- SIS/MIS field (1 bit): Single Input Stream or Multiple Input Stream.
- CCM/ACM field (1 bit): Constant Coding and Modulation or Adaptive Coding and Modulation (VCM is signalled as ACM).
- ISSYI (1 bit), (Input Stream Synchronization Indicator): If ISSYI = 1 = active, the ISSY field is inserted after UPs (see annex D).
- NPD (1 bit): Null-packet deletion active/not active.
- RO (2 bits): Transmission Roll-off factor (α).

Second byte (MATYPE-2):

- If SIS/MIS = Multiple Input Stream, then second byte = Input Stream Identifier (ISI); else second byte reserved.

UPL (2 bytes): User Packet Length in bits, in the range [0,65535].

EXAMPLE 1: 0000_{HEX} = continuous stream.

EXAMPLE 2: $000A_{HEX}$ = UP length of 10 bits.

EXAMPLE 3: UPL = $188x8_D$ for MPEG transport stream packets

DFL (2 bytes): Data Field Length in bits, in the range [0,58112].

EXAMPLE: $000A_{HEX}$ = Data Field length of 10 bits.

SYNC (1 byte): copy of the User Packet Sync-byte.

EXAMPLE 1: SYNC = 47_{HEX} for MPEG transport stream packets.

EXAMPLE 2: SYNC = 00_{HEX} when the input Generic packetized stream did not contain a sync-byte (therefore the receiver, after CRC-8 decoding, shall remove the CRC-8 field without reinserting the Sync-byte).

EXAMPLE 3: SYNC = not relevant for Generic continuous input streams.

SYNCD (2 bytes): distance in bits from the beginning of the DATA FIELD and the first UP from this frame (first bit of the CRC-8). SYNCD = 65535_D means that no UP starts in the DATA FIELD.

CRC-8 (1 byte): error detection code applied to the first 9 bytes of the BBHEADER.

CRC-8 shall be computed using the encoding circuit of figure 2 (switch in A for 72 bits, in B for 8 bits).

The BBHEADER transmission order is from the MSB of the TS/GS field.

Table 4 shows the BBHEADER and the slicing policy for a Single Transport Stream Broadcast Service. For other application areas, BBHEADERs and merging/slicing policies are defined in clause D.4, table D.2.

Table 3: MATYPE-1 field mapping

TS/GS	SIS/MIS	CCM/ACM	ISSYI	NPD	RO
11 = Transport 00 = Generic Packetized 01 = Generic continuous 10 = reserved	1 = single 0 = multiple	1 = CCM 0 = ACM	1 = active 0 = not-active	1 = active 0 = not-active	00 = 0,35 01 = 0,25 10 = 0,20 11 = reserved

Table 4: BBHeader (Mode Adaptation characteristics) and Slicing Policy for Single Transport Stream Broadcast services

Application area/configuration	MATYPE-1	MATYPE-2	UPL	DFL	SYNC	SYNCD	CRC-8	Slicing policy
Broadcasting services / CCM, single TS	11-1-1-0-0-Y	XXXXXXXX	188_Dx8	K_{bch} -80_D	47_{HEX}	Y	Y	Break No timeout No Padding No Dummy frame
X= not defined; Y = according to configuration/computation. Break = break packets in subsequent DATAFIELDs; Timeout: maximum delay in merger/slicer buffer.								

5.2 Stream adaptation

Stream adaptation (see figures 1 and 4) provides padding to complete a constant length (K_{bch} bits) BBFRAME and scrambling. K_{bch} depends on the FEC rate, as reported in table 5. Padding may be applied in circumstances when the user data available for transmission are not sufficient to completely fill a BBFRAME, or when an integer number of UPs has to be allocated in a BBFRAME.

The input stream shall be a BBHEADER followed by a DATA FIELD. The output stream shall be a BBFRAME.

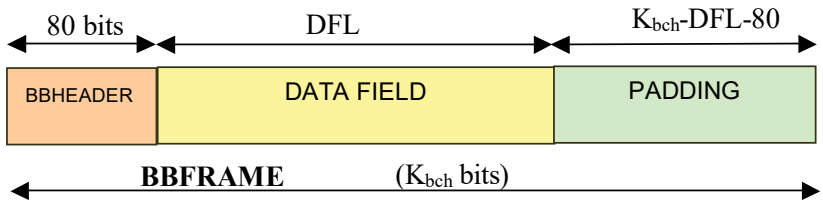

Figure 4: BBFRAME format at the output of the STREAM ADAPTER

5.2.1 Padding

(K_{bch}-DFL-80) zero bits shall be appended after the DATA FIELD. The resulting BBFRAME shall have a constant length of K_{bch} bits. For Broadcast Service applications, DFL = K_{bch} -80, therefore no padding shall be applied.

5.2.2 BB scrambling

The complete BBFRAME shall be randomized. The randomization sequence shall be synchronous with the BBFRAME, starting from the MSB and ending after K_{bch} bits.

The scrambling sequence shall be generated by the feed-back shift register of figure 5. The polynomial for the Pseudo Random Binary Sequence (PRBS) generator shall be:

$$1 + X^{14} + X^{15}$$

Loading of the sequence (100101010000000) into the PRBS register, as indicated in figure 5, shall be initiated at the start of every BBFRAME.

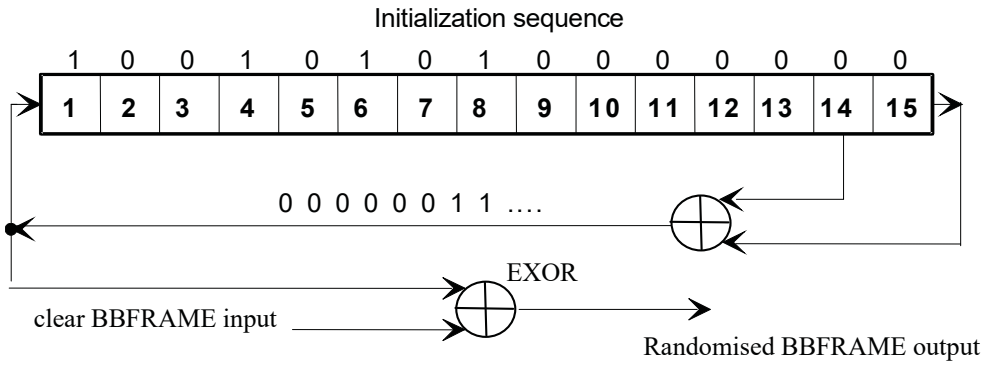

Figure 5: Possible implementation of the PRBS encoder

5.3 FEC encoding

This sub-system shall perform outer coding (BCH), Inner Coding (LDPC) and Bit interleaving. The input stream shall be composed of BBFRAMEs and the output stream of FECFRAMEs.

Each BBFRAME (K_{bch} bits) shall be processed by the FEC coding subsystem, to generate a FECFRAME (n_{ldpc} bits). The parity check bits (BCHFEC) of the systematic BCH outer code shall be appended after the BBFRAME, and the parity check bits (LDPCFEC) of the inner LDPC encoder shall be appended after the BCHFEC field, as shown in figure 6.

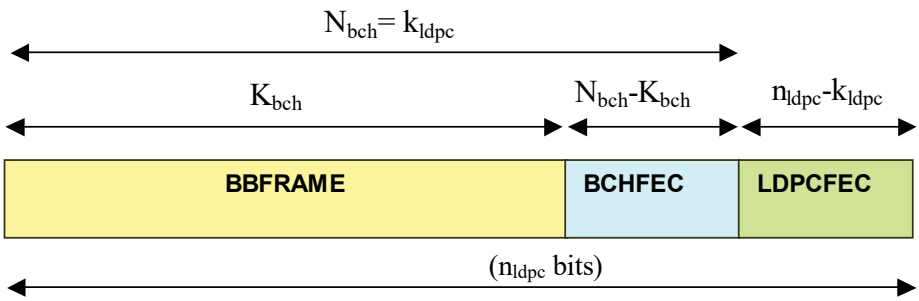

Figure 6: format of data before bit interleaving
(n_{ldpc} = 64 800 bits for normal FECFRAME, n_{ldpc} = 16 200 bits for short FECFRAME)

Table 5a gives the FEC coding parameters for the normal FECFRAME (n_{ldpc} = 64 800 bits) and table 5b for the short FECFRAME (n_{ldpc} = 16 200 bits).

Table 5a: coding parameters (for normal FECFRAME n_{ldpc} = 64 800)

LDPC code	BCH Uncoded Block K_{bch}	BCH coded block N_{bch} LDPC Uncoded Block k_{ldpc}	BCH t-error correction	LDPC Coded Block n_{ldpc}
1/4	16 008	16 200	12	64 800
1/3	21 408	21 600	12	64 800
2/5	25 728	25 920	12	64 800
1/2	32 208	32 400	12	64 800
3/5	38 688	38 880	12	64 800
2/3	43 040	43 200	10	64 800
3/4	48 408	48 600	12	64 800
4/5	51 648	51 840	12	64 800
5/6	53 840	54 000	10	64 800
8/9	57 472	57 600	8	64 800
9/10	58 192	58 320	8	64 800

Table 5b: coding parameters (for short FECFRAME n_{ldpc} = 16 200)

LDPC Code identifier	BCH Uncoded Block K_{bch}	BCH coded block N_{bch} LDPC Uncoded Block k_{ldpc}	BCH t-error correction	Effective LDPC Rate k_{ldpc}/16 200	LDPC Coded Block n_{ldpc}
1/4	3 072	3 240	12	1/5	16 200
1/3	5 232	5 400	12	1/3	16 200
2/5	6 312	6 480	12	2/5	16 200
1/2	7 032	7 200	12	4/9	16 200
3/5	9 552	9 720	12	3/5	16 200
2/3	10 632	10 800	12	2/3	16 200
3/4	11 712	11 880	12	11/15	16 200
4/5	12 432	12 600	12	7/9	16 200
5/6	13 152	13 320	12	37/45	16 200
8/9	14 232	14 400	12	8/9	16 200
9/10	NA	NA	NA	NA	NA

5.3.1 Outer encoding (BCH)

A t-error correcting BCH (N_{bch}, K_{bch}) code shall be applied to each BBFRAME (K_{bch}) to generate an error protected packet. The BCH code parameters for n_{ldpc} = 64 800 are given in table 5a and for n_{ldpc} = 16 200 in table 5b.

The generator polynomial of the *t* error correcting BCH encoder is obtained by multiplying the first *t* polynomials in table 6a for n_{ldpc} = 64 800 and in table 5b for n_{ldpc} = 16 200.

Table 6a: BCH polynomials (for normal FECFRAME n_{ldpc} = 64 800)

$g_1(x)$	$1+x^2+x^3+x^5+x^{16}$
$g_2(x)$	$1+x+x^4+x^5+x^6+x^8+x^{16}$
$g_3(x)$	$1+x^2+x^3+x^4+x^5+x^7+x^8+x^9+x^{10}+x^{11}+x^{16}$
$g_4(x)$	$1+x^2+x^4+x^6+x^9+x^{11}+x^{12}+x^{14}+x^{16}$
$g_5(x)$	$1+x+x^2+x^3+x^5+x^8+x^9+x^{10}+x^{11}+x^{12}+x^{16}$
$g_6(x)$	$1+x^2+x^4+x^5+x^7+x^8+x^9+x^{10}+x^{12}+x^{13}+x^{14}+x^{15}+x^{16}$
$g_7(x)$	$1+x^2+x^5+x^6+x^8+x^9+x^{10}+x^{11}+x^{13}+x^{15}+x^{16}$
$g_8(x)$	$1+x+x^2+x^5+x^6+x^8+x^9+x^{12}+x^{13}+x^{14}+x^{16}$
$g_9(x)$	$1+x^5+x^7+x^9+x^{10}+x^{11}+x^{16}$
$g_{10}(x)$	$1+x+x^2+x^5+x^7+x^8+x^{10}+x^{12}+x^{13}+x^{14}+x^{16}$
$g_{11}(x)$	$1+x^2+x^3+x^5+x^9+x^{11}+x^{12}+x^{13}+x^{16}$
$g_{12}(x)$	$1+x+x^5+x^6+x^7+x^9+x^{11}+x^{12}+x^{16}$

Table 6b: BCH polynomials (for short FECFRAME n_{ldpc} = 16 200)

$g_1(x)$	$1+x+x^3+x^5+x^{14}$
$g_2(x)$	$1+x^6+x^8+x^{11}+x^{14}$
$g_3(x)$	$1+x+x^2+x^6+x^9+x^{10}+x^{14}$
$g_4(x)$	$1+x^4+x^7+x^8+x^{10}+x^{12}+x^{14}$
$g_5(x)$	$1+x^2+x^4+x^6+x^8+x^9+x^{11}+x^{13}+x^{14}$
$g_6(x)$	$1+x^3+x^7+x^8+x^9+x^{13}+x^{14}$
$g_7(x)$	$1+x^2+x^5+x^6+x^7+x^{10}+x^{11}+x^{13}+x^{14}$
$g_8(x)$	$1+x^5+x^8+x^9+x^{10}+x^{11}+x^{14}$
$g_9(x)$	$1+x+x^2+x^3+x^9+x^{10}+x^{14}$
$g_{10}(x)$	$1+x^3+x^6+x^9+x^{11}+x^{12}+x^{14}$
$g_{11}(x)$	$1+x^4+x^{11}+x^{12}+x^{14}$
$g_{12}(x)$	$1+x+x^2+x^3+x^5+x^6+x^7+x^8+x^{10}+x^{13}+x^{14}$

BCH encoding of information bits $\boldsymbol{m} = (m_{k_{bch}-1}, m_{k_{bch}-2}, ..., m_1, m_0)$ onto a codeword

$c = (m_{k_{bch}-1}, m_{k_{bch}-2}, ..., m_1, m_0, d_{n_{bch}-k_{bch}-1}, d_{n_{bch}-k_{bch}-2}, ..., d_1, d_0)$ is achieved as follows:

- Multiply the message polynomial $m(x) = m_{k_{bch}-1}x^{k_{bch}-1} + m_{k_{bch}-2}x^{k_{bch}-2} + ... + m_1 x + m_0$ by $x^{n_{bch}-k_{bch}}$
- Divide $x^{n_{bch}-k_{bch}}\, m(x)$ by $g(x)$, the generator polynomial. Let $d(x) = d_{n_{bch}-k_{bch}-1}x^{n_{bch}-k_{bch}-1} + ... + d_1 x + d_0$ be the remainder.
- Set the codeword polynomial $c(x) = x^{n_{bch}-k_{bch}} m(x) + d(x)$

5.3.2 Inner encoding (LDPC)

LDPC encoder systematically encodes an information block of size k_{ldpc}, $\boldsymbol{i} = (i_0, i_1, ..., i_{k_{ldpc}-1})$ onto a codeword of size n_{ldpc}, $\boldsymbol{c} = (i_0, i_1, ..., i_{k_{ldpc}-1}, p_0, p_1, ... p_{n_{ldpc}-k_{ldpc}-1})$ The transmission of the codeword starts in the given order from i_0 and ends with $p_{n_{ldpc}-k_{ldpc}-1}$.

LDPC code parameters (n_{ldpc}, k_{ldpc}) are given in tables 5a and 5b.

For Backwards Compatible modes, the output of the inner encoder is processed according to annex F.

5.3.2.1 Inner coding for normal FECFRAME

The task of the encoder is to determine $n_{ldpc} - k_{ldpc}$ parity bits $(p_0, p_1, ..., p_{n_{ldpc}-k_{ldpc}-1})$ for every block of k_{ldpc} information bits, $(i_0, i_1, ..., i_{k_{ldpc}-1})$. The procedure is as follows:

- Initialize $p_0 = p_1 = p_2 = ... = p_{n_{ldpc}-k_{ldpc}-1} = 0$

- Accumulate the first information bit, i_0, at parity bit addresses specified in the first row of tables B.1 through B.11 in annex B. For example, for rate 2/3 (table B.6), (all additions are in GF(2))

$$p_0 = p_0 \oplus i_0 \qquad p_{2767} = p_{2767} \oplus i_0$$

$$p_{10491} = p_{10491} \oplus i_0 \qquad p_{240} = p_{240} \oplus i_0$$

$$p_{16043} = p_{16043} \oplus i_0 \qquad p_{18673} = p_{18673} \oplus i_0$$

$$p_{506} = p_{506} \oplus i_0 \qquad p_{9279} = p_{9279} \oplus i_0$$

$$p_{12826} = p_{12826} \oplus i_0 \qquad p_{10579} = p_{10579} \oplus i_0$$

$$p_{8065} = p_{8065} \oplus i_0 \qquad p_{20928} = p_{20928} \oplus i_0$$

$$p_{8226} = p_{8226} \oplus i_0$$

- For the next 359 information bits, $i_m, m = 1, 2, ..., 359$ accumulate i_m at parity bit addresses $\{x + m \bmod 360 \times q\} \bmod (n_{ldpc} - k_{ldpc})$ where x denotes the address of the parity bit accumulator corresponding to the first bit i_0, and q is a code rate dependent constant specified in table 7a. Continuing with the example, $q = 60$ for rate 2/3. So for example for information bit i_1, the following operations are performed,

$$p_{60} = p_{60} \oplus i_1 \qquad p_{2827} = p_{2827} \oplus i_1$$

$$p_{10551} = p_{10551} \oplus i_1 \qquad p_{300} = p_{300} \oplus i_1$$

$$p_{16103} = p_{16103} \oplus i_1 \qquad p_{18733} = p_{18733} \oplus i_1$$

$$p_{566} = p_{566} \oplus i_1 \qquad p_{9339} = p_{9339} \oplus i_1$$

$$p_{12886} = p_{12886} \oplus i_1 \qquad p_{10639} = p_{10639} \oplus i_1$$

$$p_{8125} = p_{8125} \oplus i_1 \qquad p_{20988} = p_{20988} \oplus i_1$$

$$p_{8286} = p_{8286} \oplus i_1$$

- For the 361st information bit i_{360}, the addresses of the parity bit accumulators are given in the second row of the tables B.1 through B.11. In a similar manner the addresses of the parity bit accumulators for the following 359 information bits $i_m, m = 361, 362, ..., 719$ are obtained using the formula $\{x + (m \bmod 360) \times q\} \bmod (n_{ldpc} - k_{ldpc})$ where x denotes the address of the parity bit accumulator corresponding to the information bit i_{360}, i.e. the entries in the second row of the tables B.1 through B.11.

- In a similar manner, for every group of 360 new information bits, a new row from tables B.1 through B.11 are used to find the addresses of the parity bit accumulators.

After all of the information bits are exhausted, the final parity bits are obtained as follows:

- Sequentially perform the following operations starting with $i = 1$.

$$p_i = p_i \oplus p_{i-1}, \quad i = 1,2,...,n_{ldpc} - k_{ldpc} - 1$$

- Final content of p_i, $i = 0,1,..,n_{ldpc} - k_{ldpc} - 1$ is equal to the parity bit p_i.

Table 7a: q values for normal frames

Code Rate	q
1/4	135
1/3	120
2/5	108
1/2	90
3/5	72
2/3	60
3/4	45
4/5	36
5/6	30
8/9	20
9/10	18

5.3.2.2 Inner coding for short FECFRAME

k_{ldpc} BCH encoded bits shall be systematically encoded to generate n_{ldpc} bits as described in clause 5.3.2.1, replacing table 7a with table 7b, the tables of annex B with the tables of annex C.

Table 7b: q values for short frames

Code Rate	q
1/4	36
1/3	30
2/5	27
1/2	25
3/5	18
2/3	15
3/4	12
4/5	10
5/6	8
8/9	5

5.3.3 Bit Interleaver (for 8PSK, 16APSK and 32APSK only)

For 8PSK, 16APSK, and 32APSK modulation formats, the output of the LDPC encoder shall be bit interleaved using a block interleaver. Data is serially written into the interleaver column-wise, and serially read out row-wise (the MSB of BBHEADER is read out first, except 8PSK rate 3/5 case where MSB of BBHEADER is read out third) as shown in figures 7 and 8.

The configuration of the block interleaver for each modulation format is specified in table 8.

Table 8: Bit Interleaver structure

Modulation	Rows (for n_{ldpc} = 64 800)	Rows (for n_{ldpc} = 16 200)	Columns
8PSK	21 600	5 400	3
16APSK	16 200	4 050	4
32APSK	12 960	3 240	5

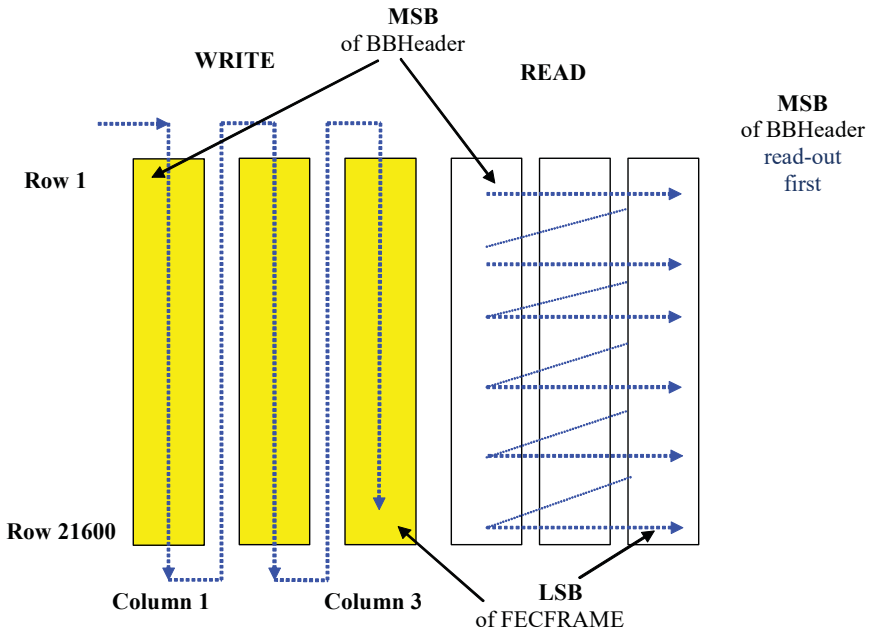

Figure 7: Bit Interleaving scheme for 8PSK and normal FECFRAME length (all rates except 3/5)

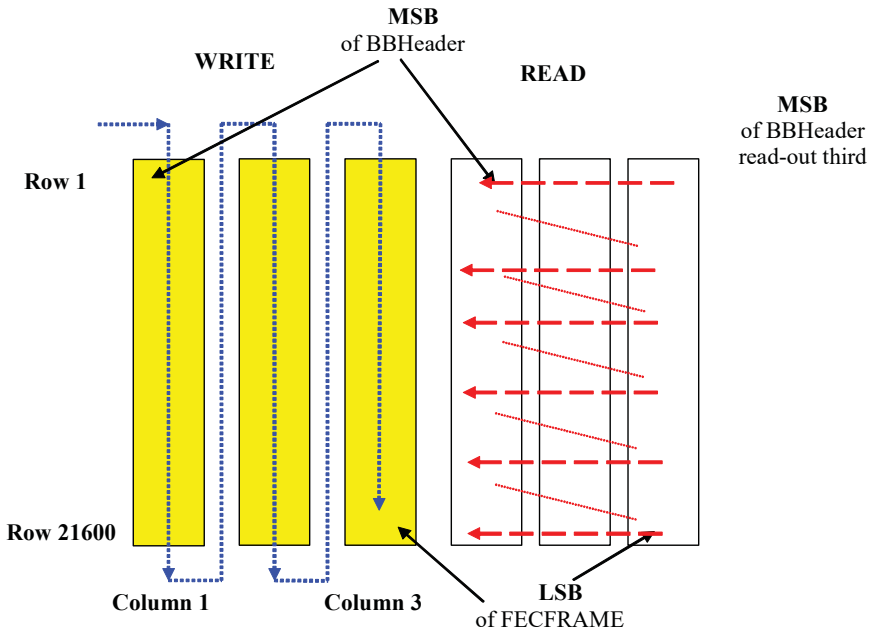

Figure 8: Bit Interleaving scheme for 8PSK and normal FECFRAME length (rate 3/5 only)

5.4 Bit mapping into constellation

Each FECFRAME (which is a sequence of 64 800 bits for normal FECFRAME, or 16 200 bits for short FECFRAME), shall be serial-to-parallel converted (parallelism level = η_{MOD} 2 for QPSK, 3 for 8PSK, 4 for 16APSK, 5 for 32APSK) in figures 9 to 12, the MSB of the FECFRAME is mapped into the MSB of the first parallel sequence. Each parallel sequence shall be mapped into constellation, generating a (I,Q) sequence of variable length depending on the selected modulation efficiency η_{MOD}.

The input sequence shall be a FECFRAME, the output sequence shall be a XFECFRAME (compleX FECFRAME), composed of 64 800/η_{MOD} (normal XFECFRAME) or 16 200/η_{MOD} (short XFECFRAME) modulation symbols. Each modulation symbol shall be a complex vector in the format (I,Q) (I being the in-phase component and Q the quadrature component) or in the equivalent format $\rho \exp(j\phi)$ (ρ being the modulus of the vector and ϕ being its phase).

5.4.1 Bit mapping into QPSK constellation

For QPSK, the System shall employ conventional Gray-coded QPSK modulation with absolute mapping (no differential coding). Bit mapping into the QPSK constellation shall follow figure 9. The normalized average energy per symbol shall be equal to $\rho^2 = 1$.

Two FECFRAME bits are mapped to a QPSK symbol i.e. bits 2i and 2i+1 determines the ith QPSK symbol, where i = 0, 1, 2, …, (N/2)-1 and N is the coded LDPC block size.

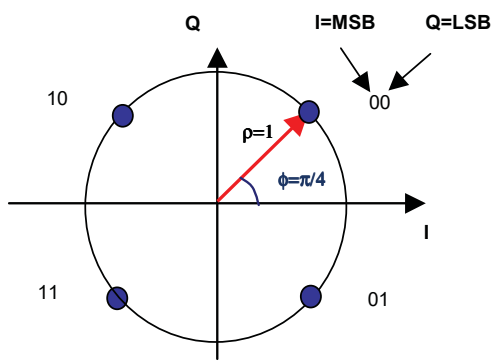

Figure 9: Bit mapping into QPSK constellation

5.4.2 Bit mapping into 8PSK constellation

For 8PSK, the System shall employ conventional Gray-coded 8PSK modulation with absolute mapping (no differential coding). Bit mapping into the 8PSK constellation shall follow figure 10. The normalized average energy per symbol shall be equal to $\rho^2 = 1$.

Bits 3i, 3i+1, 3i+2 of the interleaver output determine the ith 8PSK symbol where i = 0, 1, 2,… (N/3)-1 and N is the coded LDPC block size.

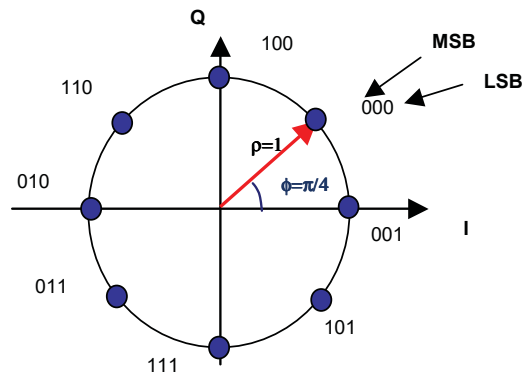

Figure 10: Bit mapping into 8PSK constellation

5.4.3 Bit mapping into 16APSK constellation

The 16APSK modulation constellation (figure 11) shall be composed of two concentric rings of uniformly spaced 4 and 12 PSK points, respectively in the inner ring of radius R_1 and outer ring of radius R_2.

The ratio of the outer circle radius to the inner circle radius ($\gamma = R_2/R_1$) shall comply with table 9.

If $4[R_1]^2 + 12[R_2]^2 = 16$ the average signal energy becomes 1.

Bits 4i, 4i+1, 4i+2 and 4i+3 of the interleaver output determine the ith 16APSK symbol, where i = 0, 1, 2, …, (N/4)-1 and N is the coded LDPC block size.

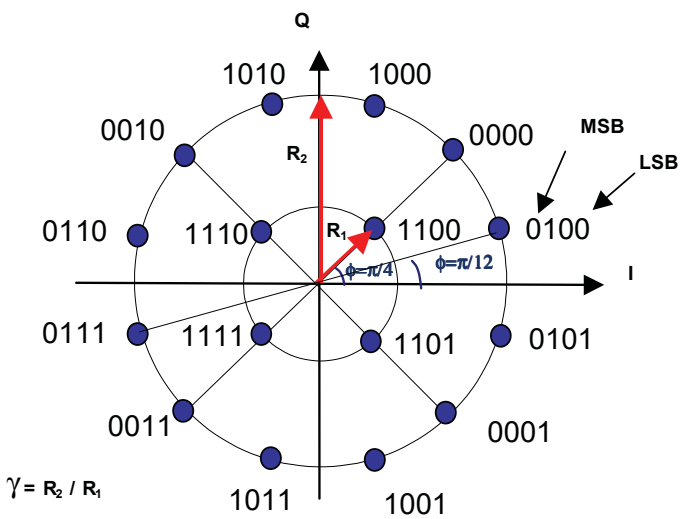

Figure 11: 16APSK signal constellation

Table 9: optimum constellation radius ratio γ (linear channel) for 16APSK

Code rate	Modulation/coding spectral efficiency	γ
2/3	2,66	3,15
3/4	2,99	2,85
4/5	3,19	2,75
5/6	3,32	2,70
8/9	3,55	2,60
9/10	3,59	2,57

5.4.4 Bit mapping into 32APSK

The 32APSK modulation constellation (see figure 12) shall be composed of three concentric rings of uniformly spaced 4, 12 and 16 PSK points, respectively in the inner ring of radius R_1, the intermediate ring of radius R_2 and the outer ring or radius R_3. Table 10 defines the values of $Y._1 = R_2/ R_1$ and $Y._2 = R_3/ R_1$.

If $4[R_1]^2 + 12[R_2]^2 + 16[R_3]^2 = 32$ the average signal energy becomes equal to 1.

Bits 5i, 5i+1, 5i+2, 5i+3 and 5i+4 of the interleaver output determine the ith 32APSK symbol, where i = 0, 1, 2, (N/5)-1.

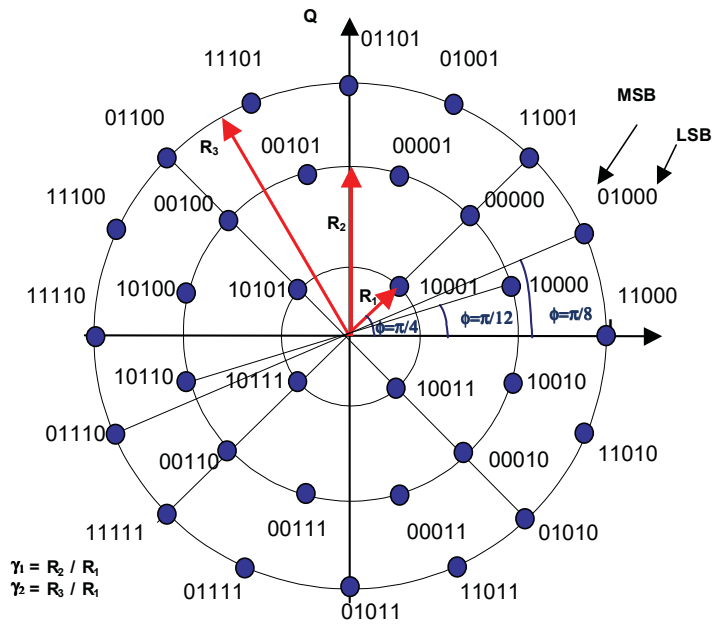

Figure 12: 32APSK signal constellation

Table 10: optimum constellation radius ratios γ_1 and γ_2 (linear channel) for 32 APSK

Code rate	Modulation/coding spectral efficiency	γ_1	γ_2
3/4	3,74	2,84	5,27
4/5	3,99	2,72	4,87
5/6	4,15	2,64	4,64
8/9	4,43	2,54	4,33
9/10	4,49	2,53	4,30

5.5 Physical Layer (PL) framing

The PLFraming sub-system shall generate a physical layer frame (named PLFRAME) by performing the following processes (see figures 1 and 13):

- Dummy PLFRAME generation when no XFECFRAME is ready to be processed and transmitted.
- XFECFRAME slicing into an integer number S of constant length SLOTs (length: M = 90 symbols each); S shall be according to table 11.
- PLHEADER generation and insertion before the XFECFRAME for receiver configuration. PLHEADER shall occupy exactly one SLOT (length: M = 90 Symbols).
- Pilot Block insertion (for modes requiring pilots) every 16 SLOTS, to help receiver synchronization. The Pilot Block shall be composed of P = 36 pilot symbols.

- randomization of the (I, Q) modulated symbols by means of a physical layer scrambler.

The input stream of the sub-system shall be a XFECFRAME and the output a scrambled PLFRAME.

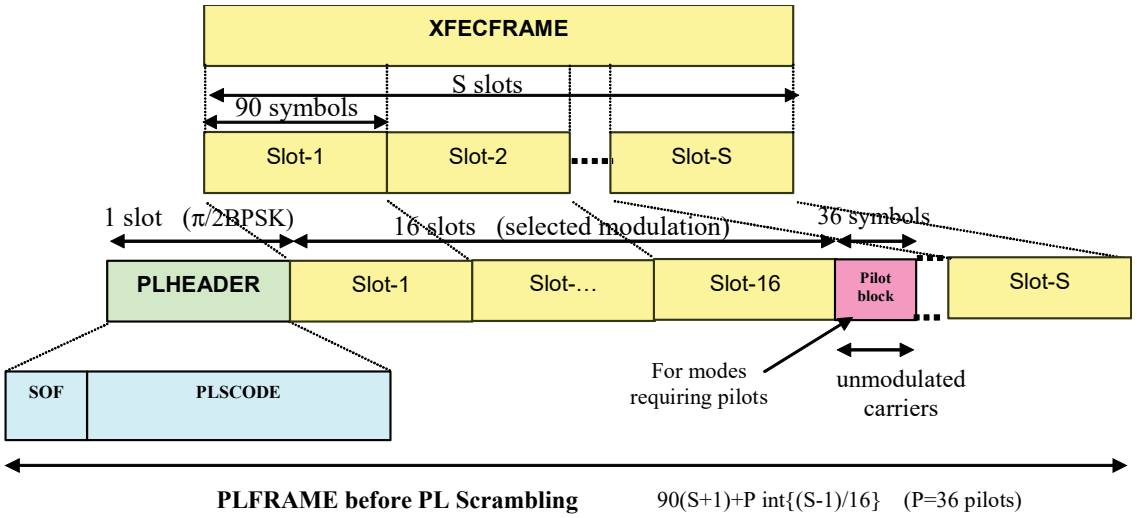

Figure 13: Format of a "Physical Layer Frame" PLFRAME

Table 11: S = number of SLOTs (M = 90 symbols) per XFECFRAME

	n_{ldpc} = 64 800 (normal frame)		n_{ldpc} = 16 200 (short frame)	
η_{MOD} (bit/s/Hz)	S	η % no-pilot	S	η % no-pilot
2	360	99,72	90	98,90
3	240	99,59	60	98,36
4	180	99,45	45	97,83
5	144	99,31	36	97,30

The PLFRAMING efficiency is $\eta = 90S/[90(S+1)+ P\ \mathrm{int}\{(S-1)/16\}]$, where P = 36 and int{.} is the integer function.

5.5.1 Dummy PLFRAME insertion

A Dummy PLFRAME shall be composed of a PLHEADER (see clause 5.5.2) and of 36 SLOTS of un-modulated carriers ($I = (1/\sqrt{2})$, $Q = (1/\sqrt{2})$).

5.5.2 PL signalling

The PLHEADER is intended for receiver synchronization and physical layer signalling

NOTE: after decoding the PLHEADER, the receiver knows the PLFRAME duration and structure, the modulation and coding scheme of the XFECFRAME, the presence or absence of pilot symbols.

The PLHEADER (one SLOT of 90 symbols) shall be composed of the following fields:

- **SOF** (26 symbols), identifying the Start of Frame.
- **PLS** code (64 symbol): PLS (Physical Layer Signalling) code shall be a non-systematic binary code of length 64 and dimension 7 with minimum distance $d_{min} = 32$. It is equivalent to the first order Reed-Muller under permutation. It transmits 7 bits for physical layer signalling purpose. These 7 bits consists of two fields: MODCOD and TYPE defined as follows:
  - MODCOD (5 symbols), identifying the XFECFRAME modulation and FEC rate;

- TYPE (2 symbols), identifying the FECFRAME length (64 800 bits or 16 200 bits) and the presence/absence of pilots.

The PLHEADER, represented by the binary sequence (y_1, y_2,...y_{90}) shall be modulated into 90 π/2BPSK symbols according to the rule:

$$I_{\cdot 2i-1} = Q_{\cdot 2i-1} = (1/\sqrt{2})\,(1-2y_{2i-1}),\ I_{\cdot 2i} = -\,Q_{\cdot 2i} = -\,(1/\sqrt{2})\,(1-2y_{2i}) \text{ for } i = 1, 2, ..., 45$$

5.5.2.1 SOF field

SOF shall correspond to the sequence $18D2E82_{HEX}$ (01-1000-....-0010 in binary notation, the left-side bit being the MSB of the PLHEADER).

5.5.2.2 MODCOD field

MODCOD shall correspond to 5 bits, identifying code rates in the set η_C = [1/4, 1/3, 2/5, 1/2, 3/5, 2/3, 3/4, 4/5, 5/6, 8/9, 9/10] and modulations in the set of spectrum efficiencies η_{MOD} = [2, 3, 4, 5] according to table 12.

Table 12: MODCOD coding

Mode	MOD COD	Mode	MOD COD	Mode	MOD COD	Mode	MOD COD
QPSK 1/4	1_D	QPSK 5/6	9_D	8PSK 9/10	17_D	32APSK 4/5	25_D
QPSK 1/3	2_D	QPSK 8/9	10_D	16APSK 2/3	18_D	32APSK 5/6	26_D
QPSK 2/5	3_D	QPSK 9/10	11_D	16APSK 3/4	19_D	32APSK 8/9	27_D
QPSK 1/2	4_D	8PSK 3/5	12_D	16APSK 4/5	20_D	32APSK 9/10	28_D
QPSK 3/5	5_D	8PSK 2/3	13_D	16APSK 5/6	21_D	Reserved	29_D
QPSK 2/3	6_D	8PSK 3/4	14_D	16APSK 8/9	22_D	Reserved	30_D
QPSK 3/4	7_D	8PSK 5/6	15_D	16APSK 9/10	23_D	Reserved	31_D
QPSK 4/5	8_D	8PSK 8/9	16_D	32APSK 3/4	24_D	DUMMY PLFRAME	0_D

5.5.2.3 TYPE field

The MSB of the TYPE field shall identify 2 FECFRAME sizes (0 = normal: 64 800 bits; 1 = short: 16 200 bits). The LSB of the TYPE field shall identify the pilot configurations (see clause 5.5.3) (0 = no pilots, 1 = pilots).

5.5.2.4 PLS code

The MODCODE and TYPE fields are bi-orthogonally coded with a (64,7) code. Such code is constructed starting from a bi-orthogonal (32,6) code according to the construction in figure 13a.

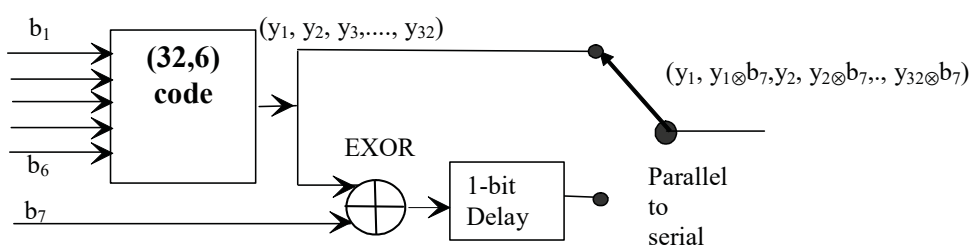

Figure 13a: (the symbol ⊗ stands for binary EXOR)

The particular construction guarantees that each odd bit in the (64,7) code is either always equal to the previous one or is always the opposite. Which of the two hypotheses is true depends on the bit b_7. This fact can be exploited in case differentially coherent detection is adopted in the receiver.

The MODCOD and the MSB of the TYPE field shall be encoded by a linear block code of length 32 with the following generator matrix.

$$\mathbf{G} = \begin{bmatrix} 01010101010101010101010101010101 \\ 00110011001100110011001100110011 \\ 00001111000011110000111100001111 \\ 00000000111111110000000011111111 \\ 00000000000000001111111111111111 \\ 11111111111111111111111111111111 \end{bmatrix}$$

Figure 13b

The most significant bit of the MODCOD is multiplied with the first row of the matrix, the following bit with the second row and so on. The 32 coded bits is denoted as $(y_1 y_2 \cdots y_{32})$. When the least significant bit of the TYPE field is 0, the final PLS code will generate $(y_1 y_1 y_2 y_2 \cdots y_{32} y_{32})$ as the output, i.e. each symbol shall be repeated. When the least significant bit of the TYPE field is 1, the final PLS code will generate $(y_1 \bar{y}_1 y_2 \bar{y}_2 \cdots y_{32} \bar{y}_{32})$ as output, i.e. the repeated symbol is further binary complemented. The 64 bits output of the PLS code is further scrambled by the binary sequence:

0111000110011101100000111100100101010011010000100010110111111010.

5.5.3 Pilots insertion

Two PLFRAME configurations shall be possible:

- Without pilots;
- With pilots.

In this latter case a PILOT BLOCK shall be composed of P = 36 pilot symbols. Each pilot shall be an un-modulated symbol, identified by I = (1/√2), Q = (1/√2). The first PILOT BLOCK shall be inserted 16 SLOTs after the PLHEADER, the second after 32 SLOTs and so on, as represented in figure 13. If the PILOT BLOCK position coincides with the beginning of the next SOF, then the PILOT BLOCK is not transmitted.

The pilot presence/absence in VCM and ACM can be changed on a frame-by-frame basis.

5.5.4 Physical layer scrambling

Prior to modulation, each PLFRAME, excluding the PLHEADER, shall be randomized for energy dispersal by multiplying the (I+jQ) samples by a complex randomization sequence (C_I+jC_Q):

$$I_{SCRAMBLED} = [I\ C_I - Q\ C_Q]; \qquad Q_{SCRAMBLED} = (I\ C_Q + Q\ C_I)$$

NOTE: The randomization sequence rate corresponds to the I-Q PLFRAME symbol rate, thus it has no impact on the occupied signal bandwidth. The randomization sequence has a period greater than the maximum required duration of about 70 000 symbols).

The randomization sequence shall be reinitialized at the end of each PLHEADER (see figure 14). The PLFRAME duration depends on the modulation selected, thus the randomization sequence length shall be truncated to the current PLFRAME length.

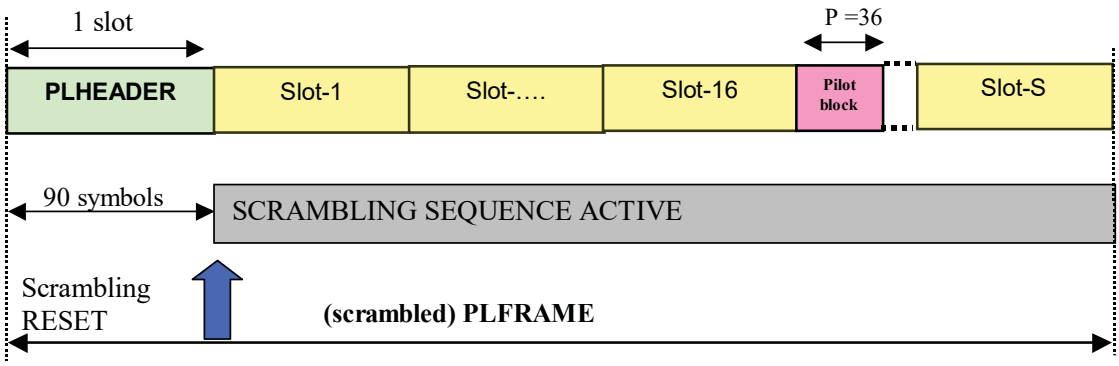

Figure 14: PL SCRAMBLING

The scrambling code sequences shall be constructed by combining two real m-sequences (generated by means of two generator polynomials of degree 18) into a complex sequence. The resulting sequences thus constitute segments of a set of Gold sequences.

Let x and y be the two sequences respectively. The x sequence is constructed using the primitive (over GF(2)) polynomial $1+x^7+x^{18}$. The y sequence is constructed using the polynomial $1+y^5+y^7+y^{10}+y^{18}$.

The sequence depending on the chosen scrambling code number n is denoted z_n in the sequel. Furthermore, let $x(i)$, $y(i)$ and $z_n(i)$ denote the $_i^{th}$ symbol of the sequence x, y, and z_n respectively. The m-sequences x and y are constructed as:

- Initial conditions:
  - x is constructed with x(0) = 1, x(1) = x(2) = ... = x(16) = x(17) = 0.
  - y(0) = y(1) = … = y(16) = y(17) = 1.
- Recursive definition of subsequent symbols:
  - x(i+18) = x(i+7) + x(i) modulo 2, i = 0, … , 2^{18} - 20.
  - y(i+18) = y(i+10) + y(i+7) + y(i+5) + y(i) modulo 2, i = 0, …, 2^{18}- 20.

The nth Gold code sequence z_n $n = 0,1,2,\ldots,2^{18}-2$, is then defined as:

- z_n (i) = [x((i+n) modulo (2^{18}-1)) + y(i)] modulo 2, i = 0,…, 2^{18}-2.

These binary sequences are converted to integer valued sequences R_n (R_n assuming values 0, 1, 2, 3) by the following transformation:

$$R_n(i) = 2\, z_n((i + 131\,072) \text{ modulo } (2^{18}-1)) + z_n(i) \qquad i = 0, 1, \ldots, 66\,419.$$

Finally, the nth complex scrambling code sequence $C_I(i) + jC_Q(i)$ is defined as:

$$C_I(i) + jC_Q(i) = \exp(j\, R_n\, (i)\, \pi/2)$$

R_n	exp(j R_n π/2)	$I_{scrambled}$	$Q_{scrambled}$
0	1	I	Q
1	j	-Q	I
2	-1	-I	-Q
3	-j	Q	-I

Figure 15 gives a possible block diagram for PL scrambling sequences generation for n = 0.

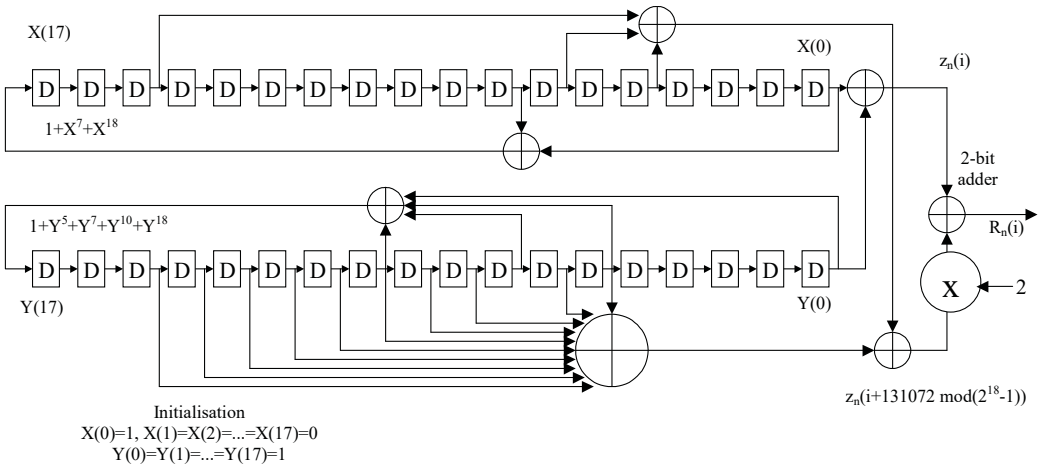

Figure 15: Configuration of PL scrambling code generator for n = 0

In case of broadcasting services, n = 0 shall be used as default sequence, to avoid manual receiver setting or synchronization delays.

NOTE: n, assuming values in the range 0, 262 141, indicates the spreading sequence number. The use of different PL Scrambling sequences allows a reduction of interference correlation between different services. For the same purpose, it is possible to reuse a shifted version of the same sequence in different satellite beams. Furthermore n can be unequivocally associated to each satellite operator or satellite or transponder, thus permitting identification of an interfering signal via the PL Scrambling "signature" detection. There is no explicit signalling method to convey *n* to the receiver.

5.6 Baseband shaping and quadrature modulation

After randomization, the signals shall be square root raised cosine filtered. The roll-off factor shall be α = 0,35, 0,25 and 0,20, depending on the service requirements.

The baseband square root raised cosine filter shall have a theoretical function defined by the following expression:

$$H(f) = 1 \qquad \text{for } |f| < f_N(1-\alpha)$$

$$H(f) = \left\{ \frac{1}{2} + \frac{1}{2}\sin\frac{\pi}{2f_N}\left[\frac{f_N - |f|}{\alpha}\right] \right\}^{1/2} \qquad \text{for } f_N(1-\alpha)$$

$$H(f) = 0 \text{ for } |f| > f_N(1+\alpha),$$

where: $f_N = \frac{1}{2T_s} = \frac{R_s}{2}$ is the Nyquist frequency and α is the roll-off factor.

A template for the signal spectrum at the modulator output is given in annex A.

Quadrature modulation shall be performed by multiplying the in-phase and quadrature samples (after baseband filtering) by sin ($2\pi f_0 t$) and cos ($2\pi f_0 t$), respectively (where f_0 is the carrier frequency). The two resulting signals shall be added to obtain the modulator output signal.

6 Error performance

Table 13 summarizes performance requirements at QEF over AWGN (E_s = average energy per transmitted symbol). Ideal E_s/No (dB) is the figure achieved by computer simulation, 50 LDPC fixed point decoding iterations (see annex G), perfect carrier and synchronization recovery, no phase noise, AWGN channel. For short FECFRAMEs an additional degradation of 0,2 dB to 0,3 dB has to be taken into account.

For calculating link budgets, specific satellite channel impairments should be taken into account.

PER is the ratio between the useful transport stream packets (188 bytes) correctly received and affected by errors, after forward error correction.

Table 13: E_s/No performance at Quasi Error Free PER = 10^{-7} (AWGN channel)

Mode	Spectral efficiency	Ideal E_s/No (dB) for FECFRAME length = 64 800
QPSK 1/4	0,490243	-2,35
QPSK 1/3	0,656448	-1,24
QPSK 2/5	0,789412	-0,30
QPSK 1/2	0,988858	1,00
QPSK 3/5	1,188304	2,23
QPSK 2/3	1,322253	3,10
QPSK 3/4	1,487473	4,03
QPSK 4/5	1,587196	4,68
QPSK 5/6	1,654663	5,18
QPSK 8/9	1,766451	6,20
QPSK 9/10	1,788612	6,42
8PSK 3/5	1,779991	5,50
8PSK 2/3	1,980636	6,62
8PSK 3/4	2,228124	7,91
8PSK 5/6	2,478562	9,35
8PSK 8/9	2,646012	10,69
8PSK 9/10	2,679207	10,98
16APSK 2/3	2,637201	8,97
16APSK 3/4	2,966728	10,21
16APSK 4/5	3,165623	11,03
16APSK 5/6	3,300184	11,61
16APSK 8/9	3,523143	12,89
16APSK 9/10	3,567342	13,13
32APSK 3/4	3,703295	12,73
32APSK 4/5	3,951571	13,64
32APSK 5/6	4,119540	14,28
32APSK 8/9	4,397854	15,69
32APSK 9/10	4,453027	16,05
NOTE: Given the system spectral efficiency η_{tot} the ratio between the energy per information bit and single sided noise power spectral density $E_b/N_0 = E_s/N_0 - 10\log_{10}(\eta_{tot})$		

Spectral efficiencies (per unit symbol rate) are computed for normal FECFRAME length and no pilots.

Examples of possible use of the System are given in annex H. Table H.1 gives examples of possible degradation introduced by the satellite channel model described in clause H.7.

Annex A (normative): Signal spectrum at the modulator output

For roll-off factor $\alpha = 0,35$, the signal spectrum at the modulator output shall be in accordance with EN 300 421 [2].

As an option, the signal spectrum can correspond to a narrower roll-off factor $\alpha = 0,25$ or $\alpha = 0,20$.

Figure A.1 gives a template for the signal spectrum at the modulator output.

Figure A.1 also represents a possible mask for a hardware implementation of the Nyquist modulator filter. The points A to S shown on figures A.1 and A.2 are defined in table A.1. The mask for the filter frequency response is based on the assumption of ideal Dirac delta input signals, spaced by the symbol period $T_S = 1/R_S = 1/2f_N$ while in the case of rectangular input signals a suitable x/sin x correction shall be applied on the filter response.

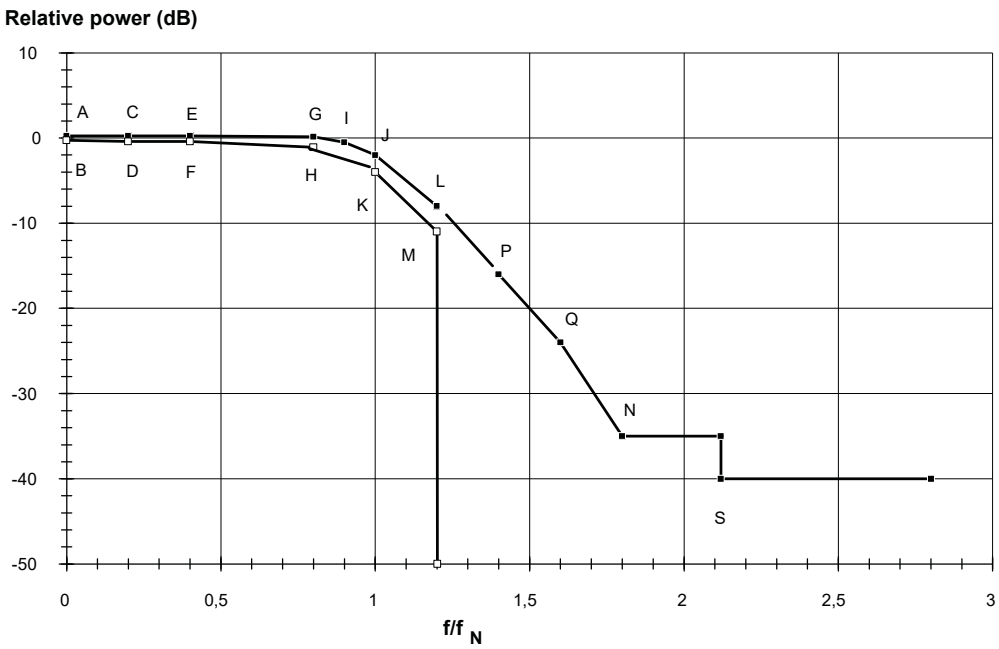

Figure A.1: Template for the signal spectrum mask at the modulator output represented in the baseband frequency domain, the frequency axis is calibrated for roll-off factor α = 0,35

Figure A.2 gives a mask for the group delay for the hardware implementation of the Nyquist modulator filter.

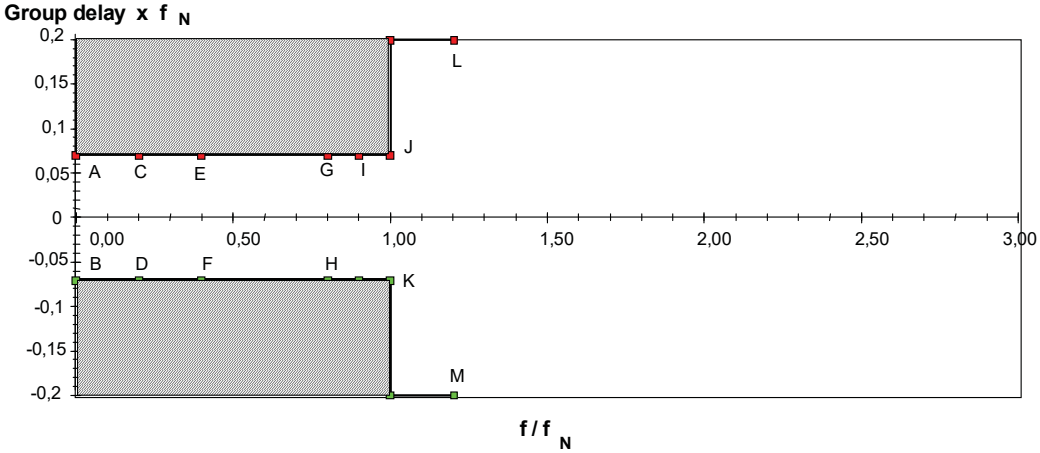

Figure A.2: Template of the modulator filter group delay

Table A.1: definition of points given in figures A.1 and A.2

Point	Frequency for α = 0,35	Frequency for α = 0,25	Frequency for α = 0,20	Relative power (dB)	Group delay
A	0,0 f_N	0,0 f_N	0,0 f_N	+0,25	+0,07 / f_N
B	0,0 f_N	0,0 f_N	0,0 f_N	-0,25	-0,07 / f_N
C	0,2 f_N	0,2 f_N	0,2 f_N	+0,25	+0,07 / f_N
D	0,2 f_N	0,2 f_N	0,2 f_N	-0,40	-0,07 / f_N
E	0,4 f_N	0,4 f_N	0,4 f_N	+0,25	+0,07 / f_N
F	0,4 f_N	0,4 f_N	0,4 f_N	-0,40	-0,07 / f_N
G	0,8 f_N	0,86f_N	0,89 f_N	+0,15	+0,07 / f_N
H	0,8 f_N	0,86 f_N	0,89 f_N	-1,10	-0,07 / f_N
I	0,9 f_N	0,93 f_N	0,94 f_N	-0,50	+0,07 / f_N
J	1,0 f_N	1,0 f_N	1,0 f_N	-2,00	+0,07 / f_N
K	1,0 f_N	1,0 f_N	1,0 f_N	-4,00	-0,07 / f_N
L	1,2 f_N	1,13 f_N	1,11 f_N	-8,00	-
M	1,2 f_N	1,13 f_N	1,11 f_N	-11,00	-
N	1,8 f_N	1,60 f_N	1,5 f_N	-35,00	-
P	1,4 f_N	1,30 f_N	1,23 f_N	-16,00	-
Q	1,6 f_N	1,45 f_N	1,4 f_N	-24,00	-
S	2,12 f_N	1,83 f_N	1,7 f_N	-40,00	-

Annex B (normative): Addresses of parity bit accumulators for n_{ldpc} = 64 800

Example of interpretation of the table B.4.

$p_{54} = p_{54} \oplus i_0$ $p_{9318} = p_{9318} \oplus i_0$ $p_{14392} = p_{14392} \oplus i_0$ $p_{27561} = p_{27561} \oplus i_0$ $p_{26909} = p_{26909} \oplus i_0$ $p_{10219} = p_{10219} \oplus i_0$
$p_{2534} = p_{2534} \oplus i_0$ $p_{8597} = p_{8597} \oplus i_0$

$p_{144} = p_{144} \oplus i_1$ $p_{9408} = p_{9408} \oplus i_1$ $p_{14482} = p_{14482} \oplus i_1$ $p_{27651} = p_{27651} \oplus i_1$ $p_{26999} = p_{26999} \oplus i_1$ $p_{10309} = p_{10309} \oplus i_1$
$p_{2624} = p_{2624} \oplus i_1$ $p_{8687} = p_{8687} \oplus i_1$

: : : : : : : : :

: : : : : : : : :

$p_{32364} = p_{32364} \oplus i_{359}$ $p_{9228} = p_{9228} \oplus i_{359}$ $p_{14302} = p_{14302} \oplus i_{359}$ $p_{27471} = p_{27471} \oplus i_{359}$ $p_{26819} = p_{26819} \oplus i_{359}$
$p_{10129} = p_{10129} \oplus i_{359}$ $p_{2444} = p_{2444} \oplus i_{359}$ $p_{8507} = p_{8507} \oplus i_{359}$

$p_{55} = p_{55} \oplus i_{360}$ $p_{7263} = p_{7263} \oplus i_{360}$ $p_{4635} = p_{4635} \oplus i_{360}$ $p_{2530} = p_{2530} \oplus i_{360}$ $p_{28130} = p_{28130} \oplus i_{360}$
$p_{3033} = p_{3033} \oplus i_{360}$ $p_{23830} = p_{23830} \oplus i_{360}$ $p_{3651} = p_{3651} \oplus i_{360}$

: : : : : : : : :

: : : : : : : : :

Table B.1: rate 1/4 (n_{ldpc} = 64 800)

23606 36098 1140 28859 18148 18510 6226 540 42014 20879 23802 47088
16419 24928 16609 17248 7693 24997 42587 16858 34921 21042 37024 20692
1874 40094 18704 14474 14004 11519 13106 28826 38669 22363 30255 31105
22254 40564 22645 22532 6134 9176 39998 23892 8937 15608 16854 31009
8037 40401 13550 19526 41902 28782 13304 32796 24679 27140 45980 10021
40540 44498 13911 22435 32701 18405 39929 25521 12497 9851 39223 34823
15233 45333 5041 44979 45710 42150 19416 1892 23121 15860 8832 10308
10468 44296 3611 1480 37581 32254 13817 6883 32892 40258 46538 11940
6705 21634 28150 43757 895 6547 20970 28914 30117 25736 41734 11392
22002 5739 27210 27828 34192 37992 10915 6998 3824 42130 4494 35739
8515 1191 13642 30950 25943 12673 16726 34261 31828 3340 8747 39225
18979 17058 43130 4246 4793 44030 19454 29511 47929 15174 24333 19354
16694 8381 29642 46516 32224 26344 9405 18292 12437 27316 35466 41992
15642 5871 46489 26723 23396 7257 8974 3156 37420 44823 35423 13541
42858 32008 41282 38773 26570 2702 27260 46974 1469 20887 27426 38553
22152 24261 8297
19347 9978 27802
34991 6354 33561
29782 30875 29523
9278 48512 14349
38061 4165 43878
8548 33172 34410
22535 28811 23950
20439 4027 24186
38618 8187 30947
35538 43880 21459

7091 45616 15063
5505 9315 21908
36046 32914 11836
7304 39782 33721
16905 29962 12980
11171 23709 22460
34541 9937 44500
14035 47316 8815
15057 45482 24461
30518 36877 879
7583 13364 24332
448 27056 4682
12083 31378 21670
1159 18031 2221
17028 38715 9350
17343 24530 29574
46128 31039 32818
20373 36967 18345
46685 20622 32806

Table B.2: rate 1/3 (n_{ldpc} = 64 800)

34903 20927 32093 1052 25611 16093 16454 5520 506 37399 18518 21120
11636 14594 22158 14763 15333 6838 22222 37856 14985 31041 18704 32910
17449 1665 35639 16624 12867 12449 10241 11650 25622 34372 19878 26894
29235 19780 36056 20129 20029 5457 8157 35554 21237 7943 13873 14980
9912 7143 35911 12043 17360 37253 25588 11827 29152 21936 24125 40870
40701 36035 39556 12366 19946 29072 16365 35495 22686 11106 8756 34863
19165 15702 13536 40238 4465 40034 40590 37540 17162 1712 20577 14138
31338 19342 9301 39375 3211 1316 33409 28670 12282 6118 29236 35787
11504 30506 19558 5100 24188 24738 30397 33775 9699 6215 3397 37451
34689 23126 7571 1058 12127 27518 23064 11265 14867 30451 28289 2966
11660 15334 16867 15160 38343 3778 4265 39139 17293 26229 42604 13486
31497 1365 14828 7453 26350 41346 28643 23421 8354 16255 11055 24279
15687 12467 13906 5215 41328 23755 20800 6447 7970 2803 33262 39843
5363 22469 38091 28457 36696 34471 23619 2404 24229 41754 1297 18563
3673 39070 14480 30279 37483 7580 29519 30519 39831 20252 18132 20010
34386 7252 27526 12950 6875 43020 31566 39069 18985 15541 40020 16715
1721 37332 39953 17430 32134 29162 10490 12971 28581 29331 6489 35383
736 7022 42349 8783 6767 11871 21675 10325 11548 25978 431 24085
1925 10602 28585 12170 15156 34404 8351 13273 20208 5800 15367 21764
16279 37832 34792 21250 34192 7406 41488 18346 29227 26127 25493 7048
39948 28229 24899
17408 14274 38993
38774 15968 28459
41404 27249 27425
41229 6082 43114
13957 4979 40654
3093 3438 34992
34082 6172 28760
42210 34141 41021
14705 17783 10134
41755 39884 22773
14615 15593 1642
29111 37061 39860
9579 33552 633
12951 21137 39608
38244 27361 29417
2939 10172 36479

29094 5357 19224
9562 24436 28637
40177 2326 13504
6834 21583 42516
40651 42810 25709
31557 32138 38142
18624 41867 39296
37560 14295 16245
6821 21679 31570
25339 25083 22081
8047 697 35268
9884 17073 19995
26848 35245 8390
18658 16134 14807
12201 32944 5035
25236 1216 38986
42994 24782 8681
28321 4932 34249
4107 29382 32124
22157 2624 14468
38788 27081 7936
4368 26148 10578
25353 4122 39751

Table B.3: rate 2/5 (n_{ldpc} = 64 800)

31413 18834 28884 947 23050 14484 14809 4968 455 33659 16666 19008
13172 19939 13354 13719 6132 20086 34040 13442 27958 16813 29619 16553
1499 32075 14962 11578 11204 9217 10485 23062 30936 17892 24204 24885
32490 18086 18007 4957 7285 32073 19038 7152 12486 13483 24808 21759
32321 10839 15620 33521 23030 10646 26236 19744 21713 36784 8016 12869
35597 11129 17948 26160 14729 31943 20416 10000 7882 31380 27858 33356
14125 12131 36199 4058 35992 36594 33698 15475 1566 18498 12725 7067
17406 8372 35437 2888 1184 30068 25802 11056 5507 26313 32205 37232
15254 5365 17308 22519 35009 718 5240 16778 23131 24092 20587 33385
27455 17602 4590 21767 22266 27357 30400 8732 5596 3060 33703 3596
6882 873 10997 24738 20770 10067 13379 27409 25463 2673 6998 31378
15181 13645 34501 3393 3840 35227 15562 23615 38342 12139 19471 15483
13350 6707 23709 37204 25778 21082 7511 14588 10010 21854 28375 33591
12514 4695 37190 21379 18723 5802 7182 2529 29936 35860 28338 10835
34283 25610 33026 31017 21259 2165 21807 37578 1175 16710 21939 30841
27292 33730 6836 26476 27539 35784 18245 16394 17939 23094 19216 17432
11655 6183 38708 28408 35157 17089 13998 36029 15052 16617 5638 36464
15693 28923 26245 9432 11675 25720 26405 5838 31851 26898 8090 37037
24418 27583 7959 35562 37771 17784 11382 11156 37855 7073 21685 34515
10977 13633 30969 7516 11943 18199 5231 13825 19589 23661 11150 35602
19124 30774 6670 37344 16510 26317 23518 22957 6348 34069 8845 20175
34985 14441 25668 4116 3019 21049 37308 24551 24727 20104 24850 12114
38187 28527 13108 13985 1425 21477 30807 8613 26241 33368 35913 32477
5903 34390 24641 26556 23007 27305 38247 2621 9122 32806 21554 18685
17287 27292 19033

25796 31795 12152
12184 35088 31226
38263 33386 24892
23114 37995 29796
34336 10551 36245
35407 175 7203
14654 38201 22605
28404 6595 1018
19932 3524 29305
31749 20247 8128
18026 36357 26735
7543 29767 13588
13333 25965 8463
14504 36796 19710
4528 25299 7318
35091 25550 14798
7824 215 1248
30848 5362 17291
28932 30249 27073
13062 2103 16206
7129 32062 19612
9512 21936 38833
35849 33754 23450
18705 28656 18111
22749 27456 32187

28229 31684 30160
15293 8483 28002
14880 13334 12584
28646 2558 19687
6259 4499 26336
11952 28386 8405
10609 961 7582
10423 13191 26818
15922 36654 21450
10492 1532 1205
30551 36482 22153
5156 11330 34243
28616 35369 13322
8962 1485 21186
23541 17445 35561
33133 11593 19895
33917 7863 33651
20063 28331 10702
13195 21107 21859
4364 31137 4804
5585 2037 4830
30672 16927 14800

Table B.4: rate 1/2 (n_{ldpc} = 64 800)

54 9318 14392 27561 26909 10219 2534 8597
55 7263 4635 2530 28130 3033 23830 3651
56 24731 23583 26036 17299 5750 792 9169
57 5811 26154 18653 11551 15447 13685 16264
58 12610 11347 28768 2792 3174 29371 12997
59 16789 16018 21449 6165 21202 15850 3186
60 31016 21449 17618 6213 12166 8334 18212
61 22836 14213 11327 5896 718 11727 9308
62 2091 24941 29966 23634 9013 15587 5444
63 22207 3983 16904 28534 21415 27524 25912
64 25687 4501 22193 14665 14798 16158 5491
65 4520 17094 23397 4264 22370 16941 21526
66 10490 6182 32370 9597 30841 25954 2762
67 22120 22865 29870 15147 13668 14955 19235
68 6689 18408 18346 9918 25746 5443 20645
69 29982 12529 13858 4746 30370 10023 24828
70 1262 28032 29888 13063 24033 21951 7863
71 6594 29642 31451 14831 9509 9335 31552
72 1358 6454 16633 20354 24598 624 5265
73 19529 295 18011 3080 13364 8032 15323
74 11981 1510 7960 21462 9129 11370 25741
75 9276 29656 4543 30699 20646 21921 28050
76 15975 25634 5520 31119 13715 21949 19605
77 18688 4608 31755 30165 13103 10706 29224
78 21514 23117 12245 26035 31656 25631 30699
79 9674 24966 31285 29908 17042 24588 31857
80 21856 27777 29919 27000 14897 11409 7122
81 29773 23310 263 4877 28622 20545 22092
82 15605 5651 21864 3967 14419 22757 15896
83 30145 1759 10139 29223 26086 10556 5098
84 18815 16575 2936 24457 26738 6030 505
85 30326 22298 27562 20131 26390 6247 24791
86 928 29246 21246 12400 15311 32309 18608
87 20314 6025 26689 16302 2296 3244 19613
88 6237 11943 22851 15642 23857 15112 20947
89 26403 25168 19038 18384 8882 12719 7093
0 14567 24965
1 3908 100
2 10279 240
3 24102 764
4 12383 4173
5 13861 15918
6 21327 1046
7 5288 14579
8 28158 8069
9 16583 11098
10 16681 28363
11 13980 24725
12 32169 17989
13 10907 2767
14 21557 3818
15 26676 12422
16 7676 8754
17 14905 20232
18 15719 24646
19 31942 8589
20 19978 27197
21 27060 15071
22 6071 26649
23 10393 11176
24 9597 13370
25 7081 17677
26 1433 19513
27 26925 9014
28 19202 8900
29 18152 30647
30 20803 1737
31 11804 25221
32 31683 17783
33 29694 9345
34 12280 26611
35 6526 26122
36 26165 11241
37 7666 26962
38 16290 8480
39 11774 10120
40 30051 30426
41 1335 15424
42 6865 17742
43 31779 12489
44 32120 21001
45 14508 6996
46 979 25024
47 4554 21896
48 7989 21777
49 4972 20661
50 6612 2730
51 12742 4418
52 29194 595
53 19267 20113

Table B.5: rate 3/5 (n_{ldpc} = 64 800)

22422 10282 11626 19997 11161 2922 3122 99 5625 17064 8270 179
25087 16218 17015 828 20041 25656 4186 11629 22599 17305 22515 6463
11049 22853 25706 14388 5500 19245 8732 2177 13555 11346 17265 3069
16581 22225 12563 19717 23577 11555 25496 6853 25403 5218 15925 21766
16529 14487 7643 10715 17442 11119 5679 14155 24213 21000 1116 15620
5340 8636 16693 1434 5635 6516 9482 20189 1066 15013 25361 14243
18506 22236 20912 8952 5421 15691 6126 21595 500 6904 13059 6802
8433 4694 5524 14216 3685 19721 25420 9937 23813 9047 25651 16826
21500 24814 6344 17382 7064 13929 4004 16552 12818 8720 5286 2206
22517 2429 19065 2921 21611 1873 7507 5661 23006 23128 20543 19777
1770 4636 20900 14931 9247 12340 11008 12966 4471 2731 16445 791
6635 14556 18865 22421 22124 12697 9803 25485 7744 18254 11313 9004
19982 23963 18912 7206 12500 4382 20067 6177 21007 1195 23547 24837
756 11158 14646 20534 3647 17728 11676 11843 12937 4402 8261 22944
9306 24009 10012 11081 3746 24325 8060 19826 842 8836 2898 5019
7575 7455 25244 4736 14400 22981 5543 8006 24203 13053 1120 5128
3482 9270 13059 15825 7453 23747 3656 24585 16542 17507 22462 14670
15627 15290 4198 22748 5842 13395 23918 16985 14929 3726 25350 24157
24896 16365 16423 13461 16615 8107 24741 3604 25904 8716 9604 20365
3729 17245 18448 9862 20831 25326 20517 24618 13282 5099 14183 8804
16455 17646 15376 18194 25528 1777 6066 21855 14372 12517 4488 17490
1400 8135 23375 20879 8476 4084 12936 25536 22309 16582 6402 24360
25119 23586 128 4761 10443 22536 8607 9752 25446 15053 1856 4040
377 21160 13474 5451 17170 5938 10256 11972 24210 17833 22047 16108
13075 9648 24546 13150 23867 7309 19798 2988 16858 4825 23950 15125
20526 3553 11525 23366 2452 17626 19265 20172 18060 24593 13255 1552
18839 21132 20119 15214 14705 7096 10174 5663 18651 19700 12524 14033
4127 2971 17499 16287 22368 21463 7943 18880 5567 8047 23363 6797
10651 24471 14325 4081 7258 4949 7044 1078 797 22910 20474 4318
21374 13231 22985 5056 3821 23718 14178 9978 19030 23594 8895 25358
6199 22056 7749 13310 3999 23697 16445 22636 5225 22437 24153 9442
7978 12177 2893 20778 3175 8645 11863 24623 10311 25767 17057 3691
20473 11294 9914 22815 2574 8439 3699 5431 24840 21908 16088 18244
8208 5755 19059 8541 24924 6454 11234 10492 16406 10831 11436 9649
16264 11275 24953 2347 12667 19190 7257 7174 24819 2938 2522 11749
3627 5969 13862 1538 23176 6353 2855 17720 2472 7428 573 15036
0 18539 18661
1 10502 3002
2 9368 10761
3 12299 7828
4 15048 13362
5 18444 24640
6 20775 19175
7 18970 10971
8 5329 19982
9 11296 18655
10 15046 20659
11 7300 22140
12 22029 14477
13 11129 742
14 13254 13813
15 19234 13273
16 6079 21122
17 22782 5828
18 19775 4247
19 1660 19413
20 4403 3649
21 13371 25851
22 22770 21784
23 10757 14131
24 16071 21617
25 6393 3725
26 597 19968
27 5743 8084
28 6770 9548
29 4285 17542
30 13568 22599
31 1786 4617
32 23238 11648
33 19627 2030
34 13601 13458
35 13740 17328
36 25012 13944
37 22513 6687
38 4934 12587
39 21197 5133
40 22705 6938
41 7534 24633
42 24400 12797
43 21911 25712
44 12039 1140
45 24306 1021
46 14012 20747
47 11265 15219
48 4670 15531
49 9417 14359
50 2415 6504
51 24964 24690
52 14443 8816
53 6926 1291
54 6209 20806
55 13915 4079
56 24410 13196
57 13505 6117
58 9869 8220
59 1570 6044
60 25780 17387
61 20671 24913
62 24558 20591
63 12402 3702
64 8314 1357
65 20071 14616
66 17014 3688
67 19837 946
68 15195 12136
69 7758 22808
70 3564 2925
71 3434 7769

Table B.6: rate 2/3 (n_{ldpc} = 64 800)

0 10491 16043 506 12826 8065 8226 2767 240 18673 9279 10579 20928
1 17819 8313 6433 6224 5120 5824 12812 17187 9940 13447 13825 18483
2 17957 6024 8681 18628 12794 5915 14576 10970 12064 20437 4455 7151
3 19777 6183 9972 14536 8182 17749 11341 5556 4379 17434 15477 18532
4 4651 19689 1608 659 16707 14335 6143 3058 14618 17894 20684 5306
5 9778 2552 12096 12369 15198 16890 4851 3109 1700 18725 1997 15882
6 486 6111 13743 11537 5591 7433 15227 14145 1483 3887 17431 12430
7 20647 14311 11734 4180 8110 5525 12141 15761 18661 18441 10569 8192
8 3791 14759 15264 19918 10132 9062 10010 12786 10675 9682 19246 5454
9 19525 9485 7777 19999 8378 9209 3163 20232 6690 16518 716 7353
10 4588 6709 20202 10905 915 4317 11073 13576 16433 368 3508 21171
11 14072 4033 19959 12608 631 19494 14160 8249 10223 21504 12395 4322
12 13800 14161
13 2948 9647
14 14693 16027
15 20506 11082
16 1143 9020
17 13501 4014
18 1548 2190
19 12216 21556
20 2095 19897
21 4189 7958
22 15940 10048
23 515 12614
24 8501 8450
25 17595 16784
26 5913 8495
27 16394 10423
28 7409 6981
29 6678 15939
30 20344 12987
31 2510 14588
32 17918 6655
33 6703 19451
34 496 4217
35 7290 5766
36 10521 8925
37 20379 11905
38 4090 5838
39 19082 17040
40 20233 12352
41 19365 19546
42 6249 19030
43 11037 19193
44 19760 11772
45 19644 7428
46 16076 3521
47 11779 21062
48 13062 9682
49 8934 5217
50 11087 3319
51 18892 4356
52 7894 3898
53 5963 4360
54 7346 11726
55 5182 5609
56 2412 17295
57 9845 20494
58 6687 1864
59 20564 5216
0 18226 17207
1 9380 8266
2 7073 3065
3 18252 13437
4 9161 15642
5 10714 10153
6 11585 9078
7 5359 9418
8 9024 9515
9 1206 16354
10 14994 1102
11 9375 20796
12 15964 6027
13 14789 6452
14 8002 18591
15 14742 14089
16 253 3045
17 1274 19286
18 14777 2044
19 13920 9900
20 452 7374
21 18206 9921
22 6131 5414
23 10077 9726
24 12045 5479
25 4322 7990
26 15616 5550
27 15561 10661
28 20718 7387
29 2518 18804
30 8984 2600
31 6516 17909
32 11148 98
33 20559 3704
34 7510 1569
35 16000 11692
36 9147 10303
37 16650 191
38 15577 18685
39 17167 20917
40 4256 3391
41 20092 17219
42 9218 5056
43 18429 8472
44 12093 20753
45 16345 12748
46 16023 11095
47 5048 17595
48 18995 4817
49 16483 3536
50 1439 16148
51 3661 3039
52 19010 18121
53 8968 11793
54 13427 18003
55 5303 3083
56 531 16668
57 4771 6722
58 5695 7960
59 3589 14630

Table B.7: Rate 3/4 (n_{ldpc} = 64 800)

0 6385 7901 14611 13389 11200 3252 5243 2504 2722 821 7374
1 11359 2698 357 13824 12772 7244 6752 15310 852 2001 11417
2 7862 7977 6321 13612 12197 14449 15137 13860 1708 6399 13444
3 1560 11804 6975 13292 3646 3812 8772 7306 5795 14327 7866
4 7626 11407 14599 9689 1628 2113 10809 9283 1230 15241 4870
5 1610 5699 15876 9446 12515 1400 6303 5411 14181 13925 7358
6 4059 8836 3405 7853 7992 15336 5970 10368 10278 9675 4651
7 4441 3963 9153 2109 12683 7459 12030 12221 629 15212 406
8 6007 8411 5771 3497 543 14202 875 9186 6235 13908 3563
9 3232 6625 4795 546 9781 2071 7312 3399 7250 4932 12652
10 8820 10088 11090 7069 6585 13134 10158 7183 488 7455 9238
11 1903 10818 119 215 7558 11046 10615 11545 14784 7961 15619
12 3655 8736 4917 15874 5129 2134 15944 14768 7150 2692 1469
13 8316 3820 505 8923 6757 806 7957 4216 15589 13244 2622
14 14463 4852 15733 3041 11193 12860 13673 8152 6551 15108 8758
15 3149 11981
16 13416 6906
17 13098 13352
18 2009 14460
19 7207 4314
20 3312 3945
21 4418 6248
22 2669 13975
23 7571 9023
24 14172 2967
25 7271 7138
26 6135 13670
27 7490 14559
28 8657 2466
29 8599 12834
30 3470 3152
31 13917 4365
32 6024 13730
33 10973 14182
34 2464 13167
35 5281 15049
36 1103 1849
37 2058 1069
38 9654 6095
39 14311 7667
40 15617 8146
41 4588 11218
42 13660 6243
43 8578 7874
44 11741 2686
0 1022 1264
1 12604 9965
2 8217 2707
3 3156 11793
4 354 1514
5 6978 14058
6 7922 16079
7 15087 12138
8 5053 6470
9 12687 14932
10 15458 1763
11 8121 1721
12 12431 549
13 4129 7091
14 1426 8415
15 9783 7604
16 6295 11329
17 1409 12061
18 8065 9087
19 2918 8438
20 1293 14115
21 3922 13851
22 3851 4000
23 5865 1768
24 2655 14957
25 5565 6332
26 4303 12631
27 11653 12236
28 16025 7632
29 4655 14128
30 9584 13123
31 13987 9597
32 15409 12110
33 8754 15490
34 7416 15325
35 2909 15549
36 2995 8257
37 9406 4791
38 11111 4854
39 2812 8521
40 8476 14717
41 7820 15360
42 1179 7939
43 2357 8678
44 7703 6216
0 3477 7067
1 3931 13845
2 7675 12899
3 1754 8187
4 7785 1400
5 9213 5891
6 2494 7703
7 2576 7902
8 4821 15682
9 10426 11935
10 1810 904
11 11332 9264
12 11312 3570
13 14916 2650
14 7679 7842
15 6089 13084
16 3938 2751
17 8509 4648
18 12204 8917
19 5749 12443
20 12613 4431
21 1344 4014
22 8488 13850
23 1730 14896
24 14942 7126
25 14983 8863
26 6578 8564
27 4947 396
28 297 12805
29 13878 6692
30 11857 11186
31 14395 11493
32 16145 12251
33 13462 7428
34 14526 13119
35 2535 11243
36 6465 12690
37 6872 9334
38 15371 14023
39 8101 10187
40 11963 4848
41 15125 6119
42 8051 14465
43 11139 5167
44 2883 14521

Table B.8: rate 4/5 (n_{ldpc} = 64 800)

0 149 11212 5575 6360 12559 8108 8505 408 10026 12828
1 5237 490 10677 4998 3869 3734 3092 3509 7703 10305
2 8742 5553 2820 7085 12116 10485 564 7795 2972 2157
3 2699 4304 8350 712 2841 3250 4731 10105 517 7516
4 12067 1351 11992 12191 11267 5161 537 6166 4246 2363
5 6828 7107 2127 3724 5743 11040 10756 4073 1011 3422
6 11259 1216 9526 1466 10816 940 3744 2815 11506 11573
7 4549 11507 1118 1274 11751 5207 7854 12803 4047 6484
8 8430 4115 9440 413 4455 2262 7915 12402 8579 7052
9 3885 9126 5665 4505 2343 253 4707 3742 4166 1556
10 1704 8936 6775 8639 8179 7954 8234 7850 8883 8713
11 11716 4344 9087 11264 2274 8832 9147 11930 6054 5455
12 7323 3970 10329 2170 8262 3854 2087 12899 9497 11700
13 4418 1467 2490 5841 817 11453 533 11217 11962 5251
14 1541 4525 7976 3457 9536 7725 3788 2982 6307 5997
15 11484 2739 4023 12107 6516 551 2572 6628 8150 9852
16 6070 1761 4627 6534 7913 3730 11866 1813 12306 8249
17 12441 5489 8748 7837 7660 2102 11341 2936 6712 11977
18 10155 4210
19 1010 10483
20 8900 10250
21 10243 12278
22 7070 4397
23 12271 3887
24 11980 6836
25 9514 4356
26 7137 10281
27 11881 2526
28 1969 11477
29 3044 10921
30 2236 8724
31 9104 6340
32 7342 8582
33 11675 10405
34 6467 12775
35 3186 12198
0 9621 11445
1 7486 5611
2 4319 4879
3 2196 344
4 7527 6650
5 10693 2440
6 6755 2706
7 5144 5998
8 11043 8033
9 4846 4435
10 4157 9228
11 12270 6562
12 11954 7592
13 7420 2592
14 8810 9636

15 689 5430
16 920 1304
17 1253 11934
18 9559 6016
19 312 7589
20 4439 4197
21 4002 9555
22 12232 7779
23 1494 8782
24 10749 3969
25 4368 3479
26 6316 5342
27 2455 3493
28 12157 7405
29 6598 11495
30 11805 4455
31 9625 2090
32 4731 2321
33 3578 2608
34 8504 1849
35 4027 1151
0 5647 4935
1 4219 1870
2 10968 8054
3 6970 5447
4 3217 5638
5 8972 669
6 5618 12472
7 1457 1280
8 8868 3883
9 8866 1224
10 8371 5972
11 266 4405
12 3706 3244
13 6039 5844
14 7200 3283
15 1502 11282
16 12318 2202
17 4523 965
18 9587 7011
19 2552 2051
20 12045 10306
21 11070 5104
22 6627 6906
23 9889 2121
24 829 9701
25 2201 1819
26 6689 12925
27 2139 8757
28 12004 5948
29 8704 3191
30 8171 10933
31 6297 7116
32 616 7146
33 5142 9761
34 10377 8138
35 7616 5811
0 7285 9863
1 7764 10867
2 12343 9019
3 4414 8331
4 3464 642
5 6960 2039
6 786 3021
7 710 2086
8 7423 5601
9 8120 4885
10 12385 11990
11 9739 10034
12 424 10162
13 1347 7597
14 1450 112
15 7965 8478
16 8945 7397
17 6590 8316
18 6838 9011
19 6174 9410
20 255 113
21 6197 5835
22 12902 3844
23 4377 3505
24 5478 8672
25 4453 2132
26 9724 1380
27 12131 11526
28 12323 9511
29 8231 1752
30 497 9022
31 9288 3080
32 2481 7515
33 2696 268
34 4023 12341
35 7108 5553

Table B.9: rate 5/6 (n_{ldpc} = 64 800)

0 4362 416 8909 4156 3216 3112 2560 2912 6405 8593 4969 6723
1 2479 1786 8978 3011 4339 9313 6397 2957 7288 5484 6031 10217
2 10175 9009 9889 3091 4985 7267 4092 8874 5671 2777 2189 8716
3 9052 4795 3924 3370 10058 1128 9996 10165 9360 4297 434 5138
4 2379 7834 4835 2327 9843 804 329 8353 7167 3070 1528 7311
5 3435 7871 348 3693 1876 6585 10340 7144 5870 2084 4052 2780
6 3917 3111 3476 1304 10331 5939 5199 1611 1991 699 8316 9960
7 6883 3237 1717 10752 7891 9764 4745 3888 10009 4176 4614 1567
8 10587 2195 1689 2968 5420 2580 2883 6496 111 6023 1024 4449
9 3786 8593 2074 3321 5057 1450 3840 5444 6572 3094 9892 1512
10 8548 1848 10372 4585 7313 6536 6379 1766 9462 2456 5606 9975
11 8204 10593 7935 3636 3882 394 5968 8561 2395 7289 9267 9978
12 7795 74 1633 9542 6867 7352 6417 7568 10623 725 2531 9115
13 7151 2482 4260 5003 10105 7419 9203 6691 8798 2092 8263 3755
14 3600 570 4527 200 9718 6771 1995 8902 5446 768 1103 6520
15 6304 7621
16 6498 9209
17 7293 6786
18 5950 1708
19 8521 1793
20 6174 7854
21 9773 1190
22 9517 10268
23 2181 9349
24 1949 5560
25 1556 555
26 8600 3827
27 5072 1057
28 7928 3542
29 3226 3762
0 7045 2420
1 9645 2641
2 2774 2452
3 5331 2031
4 9400 7503
5 1850 2338
6 10456 9774
7 1692 9276
8 10037 4038
9 3964 338
10 2640 5087
11 858 3473
12 5582 5683
13 9523 916
14 4107 1559
15 4506 3491
16 8191 4182
17 10192 6157
18 5668 3305
19 3449 1540
20 4766 2697
21 4069 6675
22 1117 1016
23 5619 3085
24 8483 8400
25 8255 394
26 6338 5042
27 6174 5119
28 7203 1989
29 1781 5174
0 1464 3559
1 3376 4214
2 7238 67
3 10595 8831
4 1221 6513
5 5300 4652
6 1429 9749
7 7878 5131
8 4435 10284
9 6331 5507
10 6662 4941
11 9614 10238
12 8400 8025
13 9156 5630
14 7067 8878
15 9027 3415
16 1690 3866
17 2854 8469
18 6206 630
19 363 5453
20 4125 7008
21 1612 6702
22 9069 9226
23 5767 4060
24 3743 9237
25 7018 5572
26 8892 4536
27 853 6064
28 8069 5893
29 2051 2885
0 10691 3153
1 3602 4055
2 328 1717
3 2219 9299
4 1939 7898
5 617 206
6 8544 1374
7 10676 3240
8 6672 9489
9 3170 7457
10 7868 5731
11 6121 10732
12 4843 9132
13 580 9591
14 6267 9290
15 3009 2268
16 195 2419
17 8016 1557
18 1516 9195
19 8062 9064
20 2095 8968
21 753 7326
22 6291 3833
23 2614 7844
24 2303 646
25 2075 611
26 4687 362
27 8684 9940
28 4830 2065
29 7038 1363
0 1769 7837
1 3801 1689
2 10070 2359
3 3667 9918
4 1914 6920
5 4244 5669
6 10245 7821
7 7648 3944
8 3310 5488
9 6346 9666
10 7088 6122
11 1291 7827
12 10592 8945
13 3609 7120
14 9168 9112
15 6203 8052
16 3330 2895
17 4264 10563
18 10556 6496
19 8807 7645
20 1999 4530
21 9202 6818
22 3403 1734
23 2106 9023
24 6881 3883
25 3895 2171
26 4062 6424
27 3755 9536

28 4683 2131

29 7347 8027

Table B.1.0: rate 8/9 (n_{ldpc} = 64 800)

0 6235 2848 3222	13 1969 3869	6 5821 4932	19 5736 1399	12 2644 5073
1 5800 3492 5348	14 3571 2420	7 6356 4756	0 970 2572	13 4212 5088
2 2757 927 90	15 4632 981	8 3930 418	1 2062 6599	14 3463 3889
3 6961 4516 4739	16 3215 4163	9 211 3094	2 4597 4870	15 5306 478
4 1172 3237 6264	17 973 3117	10 1007 4928	3 1228 6913	16 4320 6121
5 1927 2425 3683	18 3802 6198	11 3584 1235	4 4159 1037	17 3961 1125
6 3714 6309 2495	19 3794 3948	12 6982 2869	5 2916 2362	18 5699 1195
7 3070 6342 7154	0 3196 6126	13 1612 1013	6 395 1226	19 6511 792
8 2428 613 3761	1 573 1909	14 953 4964	7 6911 4548	0 3934 2778
9 2906 264 5927	2 850 4034	15 4555 4410	8 4618 2241	1 3238 6587
10 1716 1950 4273	3 5622 1601	16 4925 4842	9 4120 4280	2 1111 6596
11 4613 6179 3491	4 6005 524	17 5778 600	10 5825 474	3 1457 6226
12 4865 3286 6005	5 5251 5783	18 6509 2417	11 2154 5558	4 1446 3885
13 1343 5923 3529	6 172 2032	19 1260 4903	12 3793 5471	5 3907 4043
14 4589 4035 2132	7 1875 2475	0 3369 3031	13 5707 1595	6 6839 2873
15 1579 3920 6737	8 497 1291	1 3557 3224	14 1403 325	7 1733 5615
16 1644 1191 5998	9 2566 3430	2 3028 583	15 6601 5183	8 5202 4269
17 1482 2381 4620	10 1249 740	3 3258 440	16 6369 4569	9 3024 4722
18 6791 6014 6596	11 2944 1948	4 6226 6655	17 4846 896	10 5445 6372
19 2738 5918 3786	12 6528 2899	5 4895 1094	18 7092 6184	11 370 1828
0 5156 6166	13 2243 3616	6 1481 6847	19 6764 7127	12 4695 1600
1 1504 4356	14 867 3733	7 4433 1932	0 6358 1951	13 680 2074
2 130 1904	15 1374 4702	8 2107 1649	1 3117 6960	14 1801 6690
3 6027 3187	16 4698 2285	9 2119 2065	2 2710 7062	15 2669 1377
4 6718 759	17 4760 3917	10 4003 6388	3 1133 3604	16 2463 1681
5 6240 2870	18 1859 4058	11 6720 3622	4 3694 657	17 5972 5171
6 2343 1311	19 6141 3527	12 3694 4521	5 1355 110	18 5728 4284
7 1039 5465	0 2148 5066	13 1164 7050	6 3329 6736	19 1696 1459
8 6617 2513	1 1306 145	14 1965 3613	7 2505 3407	
9 1588 5222	2 2319 871	15 4331 66	8 2462 4806	
10 6561 535	3 3463 1061	16 2970 1796	9 4216 214	
11 4765 2054	4 5554 6647	17 4652 3218	10 5348 5619	
12 5966 6892	5 5837 339	18 1762 4777	11 6627 6243	

Table B.11: rate 9/10 (n_{ldpc} = 64 800)

0 5611 2563 2900	17 3216 2178	16 6296 2583	15 1263 293	14 3267 649
1 5220 3143 4813	0 4165 884	17 1457 903	16 5949 4665	15 6236 593
2 2481 834 81	1 2896 3744	0 855 4475	17 4548 6380	16 646 2948
3 6265 4064 4265	2 874 2801	1 4097 3970	0 3171 4690	17 4213 1442
4 1055 2914 5638	3 3423 5579	2 4433 4361	1 5204 2114	0 5779 1596
5 1734 2182 3315	4 3404 3552	3 5198 541	2 6384 5565	1 2403 1237
6 3342 5678 2246	5 2876 5515	4 1146 4426	3 5722 1757	2 2217 1514
7 2185 552 3385	6 516 1719	5 3202 2902	4 2805 6264	3 5609 716
8 2615 236 5334	7 765 3631	6 2724 525	5 1202 2616	4 5155 3858
9 1546 1755 3846	8 5059 1441	7 1083 4124	6 1018 3244	5 1517 1312
10 4154 5561 3142	9 5629 598	8 2326 6003	7 4018 5289	6 2554 3158
11 4382 2957 5400	10 5405 473	9 5605 5990	8 2257 3067	7 5280 2643
12 1209 5329 3179	11 4724 5210	10 4376 1579	9 2483 3073	8 4990 1353
13 1421 3528 6063	12 155 1832	11 4407 984	10 1196 5329	9 5648 1170
14 1480 1072 5398	13 1689 2229	12 1332 6163	11 649 3918	10 1152 4366
15 3843 1777 4369	14 449 1164	13 5359 3975	12 3791 4581	11 3561 5368
16 1334 2145 4163	15 2308 3088	14 1907 1854	13 5028 3803	12 3581 1411
17 2368 5055 260	16 1122 669	15 3601 5748	14 3119 3506	13 5647 4661
0 6118 5405	17 2268 5758	16 6056 3266	15 4779 431	14 1542 5401
1 2994 4370	0 5878 2609	17 3322 4085	16 3888 5510	15 5078 2687
2 3405 1669	1 782 3359	0 1768 3244	17 4387 4084	16 316 1755
3 4640 5550	2 1231 4231	1 2149 144	0 5836 1692	17 3392 1991
4 1354 3921	3 4225 2052	2 1589 4291	1 5126 1078	
5 117 1713	4 4286 3517	3 5154 1252	2 5721 6165	
6 5425 2866	5 5531 3184	4 1855 5939	3 3540 2499	
7 6047 683	6 1935 4560	5 4820 2706	4 2225 6348	
8 5616 2582	7 1174 131	6 1475 3360	5 1044 1484	
9 2108 1179	8 3115 956	7 4266 693	6 6323 4042	
10 933 4921	9 3129 1088	8 4156 2018	7 1313 5603	
11 5953 2261	10 5238 4440	9 2103 752	8 1303 3496	
12 1430 4699	11 5722 4280	10 3710 3853	9 3516 3639	
13 5905 480	12 3540 375	11 5123 931	10 5161 2293	
14 4289 1846	13 191 2782	12 6146 3323	11 4682 3845	
15 5374 6208	14 906 4432	13 1939 5002	12 3045 643	
16 1775 3476	15 3225 1111	14 5140 1437	13 2818 2616	

Annex C (normative): Addresses of parity bit accumulators for n_{ldpc} = 16 200

Table C.1: rate 1/4 (n_{ldpc} = 16 200)

6295 9626 304 7695 4839 4936 1660 144 11203 5567 6347 12557
10691 4988 3859 3734 3071 3494 7687 10313 5964 8069 8296 11090
10774 3613 5208 11177 7676 3549 8746 6583 7239 12265 2674 4292
11869 3708 5981 8718 4908 10650 6805 3334 2627 10461 9285 11120
7844 3079 10773
3385 10854 5747
1360 12010 12202
6189 4241 2343
9840 12726 4977

Table C.2: rate 1/3 (n_{ldpc} = 16 200)

416 8909 4156 3216 3112 2560 2912 6405 8593 4969 6723 6912
8978 3011 4339 9312 6396 2957 7288 5485 6031 10218 2226 3575
3383 10059 1114 10008 10147 9384 4290 434 5139 3536 1965 2291
2797 3693 7615 7077 743 1941 8716 6215 3840 5140 4582 5420
6110 8551 1515 7404 4879 4946 5383 1831 3441 9569 10472 4306
1505 5682 7778
7172 6830 6623
7281 3941 3505
10270 8669 914
3622 7563 9388
9930 5058 4554
4844 9609 2707
6883 3237 1714
4768 3878 10017
10127 3334 8267

Table C.3: rate 2/5 (n_{ldpc} = 16 200)

5650 4143 8750 583 6720 8071 635 1767 1344 6922 738 6658
5696 1685 3207 415 7019 5023 5608 2605 857 6915 1770 8016
3992 771 2190 7258 8970 7792 1802 1866 6137 8841 886 1931
4108 3781 7577 6810 9322 8226 5396 5867 4428 8827 7766 2254
4247 888 4367 8821 9660 324 5864 4774 227 7889 6405 8963
9693 500 2520 2227 1811 9330 1928 5140 4030 4824 806 3134
1652 8171 1435
3366 6543 3745
9286 8509 4645
7397 5790 8972
6597 4422 1799
9276 4041 3847
8683 7378 4946
5348 1993 9186
6724 9015 5646
4502 4439 8474
5107 7342 9442
1387 8910 2660

Table C.4: rate 1/2 (n_{ldpc} = 16 200)

20 712 2386 6354 4061 1062 5045 5158
21 2543 5748 4822 2348 3089 6328 5876
22 926 5701 269 3693 2438 3190 3507
23 2802 4520 3577 5324 1091 4667 4449
24 5140 2003 1263 4742 6497 1185 6202
0 4046 6934
1 2855 66
2 6694 212
3 3439 1158
4 3850 4422
5 5924 290
6 1467 4049
7 7820 2242
8 4606 3080
9 4633 7877
10 3884 6868
11 8935 4996
12 3028 764
13 5988 1057
14 7411 3450

Table C.5: rate 3/5 (n_{ldpc} = 16 200)

2765 5713 6426 3596 1374 4811 2182 544 3394 2840 4310 771
4951 211 2208 723 1246 2928 398 5739 265 5601 5993 2615
210 4730 5777 3096 4282 6238 4939 1119 6463 5298 6320 4016
4167 2063 4757 3157 5664 3956 6045 563 4284 2441 3412 6334
4201 2428 4474 59 1721 736 2997 428 3807 1513 4732 6195
2670 3081 5139 3736 1999 5889 4362 3806 4534 5409 6384 5809
5516 1622 2906 3285 1257 5797 3816 817 875 2311 3543 1205
4244 2184 5415 1705 5642 4886 2333 287 1848 1121 3595 6022
2142 2830 4069 5654 1295 2951 3919 1356 884 1786 396 4738
0 2161 2653
1 1380 1461
2 2502 3707
3 3971 1057
4 5985 6062
5 1733 6028
6 3786 1936
7 4292 956
8 5692 3417
9 266 4878
10 4913 3247
11 4763 3937
12 3590 2903
13 2566 4215
14 5208 4707
15 3940 3388
16 5109 4556
17 4908 4177

Table C.6: rate 2/3 (n_{ldpc} = 16 200)

0 2084 1613 1548 1286 1460 3196 4297 2481 3369 3451 4620 2622
1 122 1516 3448 2880 1407 1847 3799 3529 373 971 4358 3108
2 259 3399 929 2650 864 3996 3833 107 5287 164 3125 2350
3 342 3529
4 4198 2147
5 1880 4836
6 3864 4910
7 243 1542
8 3011 1436
9 2167 2512
10 4606 1003
11 2835 705
12 3426 2365
13 3848 2474
14 1360 1743
0 163 2536
1 2583 1180
2 1542 509
3 4418 1005
4 5212 5117
5 2155 2922
6 347 2696
7 226 4296
8 1560 487
9 3926 1640
10 149 2928
11 2364 563
12 635 688
13 231 1684
14 1129 3894

Table C.7: rate 3/4 (n_{ldpc} = 16 200)

3 3198 478 4207 1481 1009 2616 1924 3437 554 683 1801
4 2681 2135
5 3107 4027
6 2637 3373
7 3830 3449
8 4129 2060
9 4184 2742
10 3946 1070
11 2239 984
0 1458 3031
1 3003 1328
2 1137 1716
3 132 3725
4 1817 638
5 1774 3447
6 3632 1257
7 542 3694
8 1015 1945
9 1948 412
10 995 2238
11 4141 1907
0 2480 3079
1 3021 1088
2 713 1379
3 997 3903
4 2323 3361
5 1110 986
6 2532 142
7 1690 2405
8 1298 1881
9 615 174
10 1648 3112
11 1415 2808

Table C.8: rate 4/5 (n_{ldpc} = 16 200)

5 896 1565
6 2493 184
7 212 3210
8 727 1339
9 3428 612
0 2663 1947
1 230 2695
2 2025 2794
3 3039 283
4 862 2889
5 376 2110
6 2034 2286
7 951 2068
8 3108 3542
9 307 1421
0 2272 1197
1 1800 3280
2 331 2308
3 465 2552
4 1038 2479
5 1383 343
6 94 236
7 2619 121
8 1497 2774
9 2116 1855
0 722 1584
1 2767 1881
2 2701 1610
3 3283 1732
4 168 1099
5 3074 243
6 3460 945
7 2049 1746
8 566 1427
9 3545 1168

Table C.9: rate 5/6 (n_{ldpc} = 16 200)

3 2409 499 1481 908 559 716 1270 333 2508 2264 1702 2805
4 2447 1926
5 414 1224
6 2114 842
7 212 573
0 2383 2112
1 2286 2348
2 545 819
3 1264 143
4 1701 2258
5 964 166
6 114 2413
7 2243 81
0 1245 1581
1 775 169
2 1696 1104
3 1914 2831
4 532 1450
5 91 974
6 497 2228
7 2326 1579
0 2482 256
1 1117 1261
2 1257 1658
3 1478 1225
4 2511 980
5 2320 2675
6 435 1278
7 228 503
0 1885 2369
1 57 483
2 838 1050
3 1231 1990
4 1738 68
5 2392 951
6 163 645
7 2644 1704

Table C.10: rate 8/9 (n_{ldpc} = 16 200)

0 1558 712 805
1 1450 873 1337
2 1741 1129 1184
3 294 806 1566
4 482 605 923
0 926 1578
1 777 1374
2 608 151
3 1195 210
4 1484 692
0 427 488
1 828 1124
2 874 1366
3 1500 835
4 1496 502
0 1006 1701
1 1155 97
2 657 1403
3 1453 624
4 429 1495
0 809 385
1 367 151
2 1323 202
3 960 318
4 1451 1039
0 1098 1722
1 1015 1428
2 1261 1564
3 544 1190
4 1472 1246
0 508 630
1 421 1704
2 284 898
3 392 577
4 1155 556
0 631 1000
1 732 1368
2 1328 329
3 1515 506
4 1104 1172

Annex D (normative): Additional Mode Adaptation and ACM tools

D.1 "ACM Command" signalling interface

"ACM Command" signalling input (see figure 1) shall allow setting, by an external "transmission mode control unit", of the transmission parameters to be adopted by the DVB-S2 modulator, for a specific portion of input data.

"ACM Command" shall carry the following information:

- MODCOD (5 bits, according to table 12).
- TYPE (2 bits, according to clause 5.5.2.3).
- CVALID (Command Valid).
- SEND (deliver Data).

The transmission format specified by MODCOD and TYPE shall be applied to user data received after CVALID = active and before SEND = active. When SEND = active, the modulator shall deliver user data immediately, even if a FECFRAME is not completed, by inserting the PADDING field (see clause 5.2.1). The user data included in the interval between CVALID = active and SEND = active shall not exceed the capacity of (K_{bch}-80) bits, K_{bch} being the transmittable bits associated with a specific MODCOD and TYPE.

For input Transport Streams, ACM is implemented via null-packet deletion function, therefore input user data do not correspond directly to the transmitted data. In this case, the SEND function is not relevant, and CVALID, MODCOD and TYPE shall become active at least 10 times a second. The ACM modulator shall continuously apply the specified MODCOD and TYPE to user data after CVALID = active.

An example temporization of ACM Command is given in figure D.1, using a single serial interface to convey MODCOD, TYPE, CVALID(active = high-to-low transition) and SEND (active = low-to-high transition).

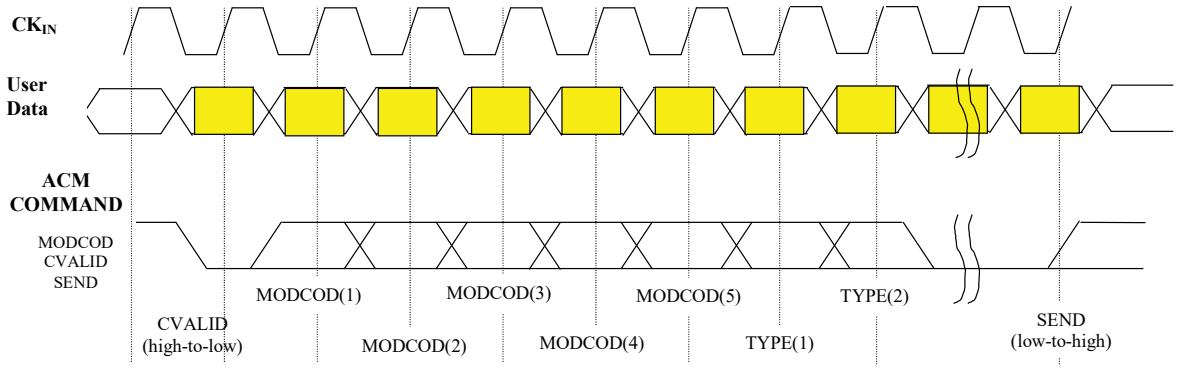

Figure D.1: Example temporization of ACM Command (serial format)

D.2 Input stream synchronizer

Delays and packet jitter introduced by DVB-S2 modems may depend from the transmitted bit-rate and may change in time during ACM rate switching. The "Input Stream Synchronizer" (see figures D.1 and D.2) shall provide a mechanism to regenerate, in the receiver, the clock of the Transport Stream (or packetized Generic Stream) at the modulator Mode Adapter input, in order to guarantee end-to-end constant bit rates and delays (see also figure G.3, example receiver implementation). Table 1 indicates the applications in which the Input Stream Synchronizer is normative or optional.

When ISSYI = 1 in MATYPE field (see table 3), a counter shall be activated (22 bits), clocked by the modulator symbol rate (frequency R_s). The Input Stream SYnchronization field (ISSY, 2 or 3 bytes) shall be appended after each input packet (in the case of Transport Streams, before null-packet deletion takes place), as shown in figure D.2. ISSY shall be coded according to table D.1, sending the following variables:

- ISCR (short: 15 bits; long: 22 bits) (ISCR = Input Stream Time Reference), loaded with the LSBs of the counter content at the instant the relevant input packet is processed (at constant rate R_{IN}) , and specifically the instant the MSB of the relevant packet arrives at the modulator input stream interface.
- BUFS (2+10 bits) (BUFS = maximum size of the requested receiver buffer to compensate delay variations). It is assumed that a receiver FIFO buffer (see clause G.3, figure G.3) operates on a single stream input (i.e. corresponding to a specific MATYPE-2 configuration for SIS/MIS = 0 in MATYPE-1); the FIFO buffer input is the recovered packet stream after FEC error correction, at the channel arriving rate, and after null packet reinsertion, its output is the modulator output stream (to be sent to the TS demultiplexer in case of Transport Stream), read with the recovered (transport) stream clock. If ISSYI = 1, this variable shall be transmitted at least 5 times per second, replacing ISCR. The maximum buffer size required in the receiver shall be 20 Mbit.
- BUFSTAT (2+10 bits) (BUFSTAT = actual status to reset the receiver buffer = number of filled bits). If ISSYI = 1, this variable shall be transmitted at least 5 times per second, replacing ISCR. This value can be used to set the receiver buffer status during reception start-up procedure, and to verify normal functioning in steady state.

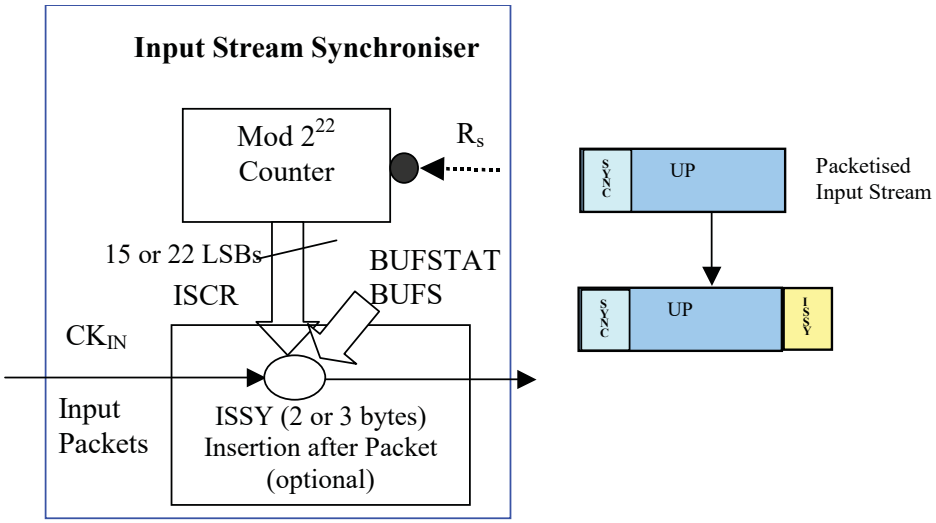

Figure D.2: Input stream synchronizer block diagram

Table D.1: ISSY field coding (2 or 3 bytes)

First Byte					Second Byte	Third Byte
bit-7 (MSB)	**bit-6**	**bit-5 and bit-4**	**bit-3 and bit-2**	**bit-1 and bit-0**	**bit-7 to bit-0**	**bit-7 bit-0**
0 = $ISCR_{short}$	MSB of $ISCR_{short}$	next 6 bits of $ISCR_{short}$			next 8 bits of SCR_{short}	not present
1	0 = $ISCR_{long}$	6 MSBs of $ISCR_{long}$			next 8 bits of $ISCR_{long}$	next 8 bits of $ISCR_{long}$
1	1	00 = BUFS	BUFS unit 00 = bits 01 = Kbits 10 = Mbits 11 = reserved	4 MSBs of BUFS	next 6 bits of BUFS	not present when $ISCR_{short}$ is used; else reserved
1	1	10 = BUFSTAT	BUFSTAT unit 00 = bits 01 = Kbits 10 = Mbits 11 = reserved	4 MSBs of BUFSTAT	next 6 bits of BUFSTAT	not present when $ISCR_{short}$ is used; else reserved
1	1	others = reserved	reserved	reserved	reserved	not present when $ISCR_{short}$ is used; else reserved

An example receiver scheme to regenerate the output packet stream and the relevant clock R'_{IN} is given in figure G.3.

D.3 Null-packet Deletion (normative for input transport streams and ACM)

Transport Stream rules require that the bit rates at the output of the MUX and the input of the DEMUX are constant in time, and the end-to-end delay is also constant. In order to fulfil such requirements in an ACM environment, the null-packet deletion function shall be activated (see annex H.4 for application examples).

As shown in figure D.3, Useful Packets (i.e. packets with PID≠8191_D) (including the optional ISSY appended field) shall be transmitted while null-packets (PID = 8191_D) (including the optional ISSY appended field) shall be removed.

After transmission of a UP, a counter called DNP (Deleted Null-Packets, 1 byte) shall be first reset and then incremented at each deleted null-packet. The counter content shall be appended after the Least Significant Byte of the next transmitted useful packet, then DNP shall be reset. When DNP reaches the maximum allowed value DNP = 255_D, then if the following packet is again a null-packet this null-packet is kept as a useful packet and transmitted.

The resulting stream has UPL = (188+**1**)x8 bits (for ISSYI = 0) or UPL = (188+2+**1**)x8 bits (for ISSYI = 1 and $ISCR_{short}$), or UPL = (188+3+**1**)x8 bits (for ISSYI = 1 and $ISCR_{long}$), since the Transport Stream packets are extended by the DNP and ISSY (optional) fields.

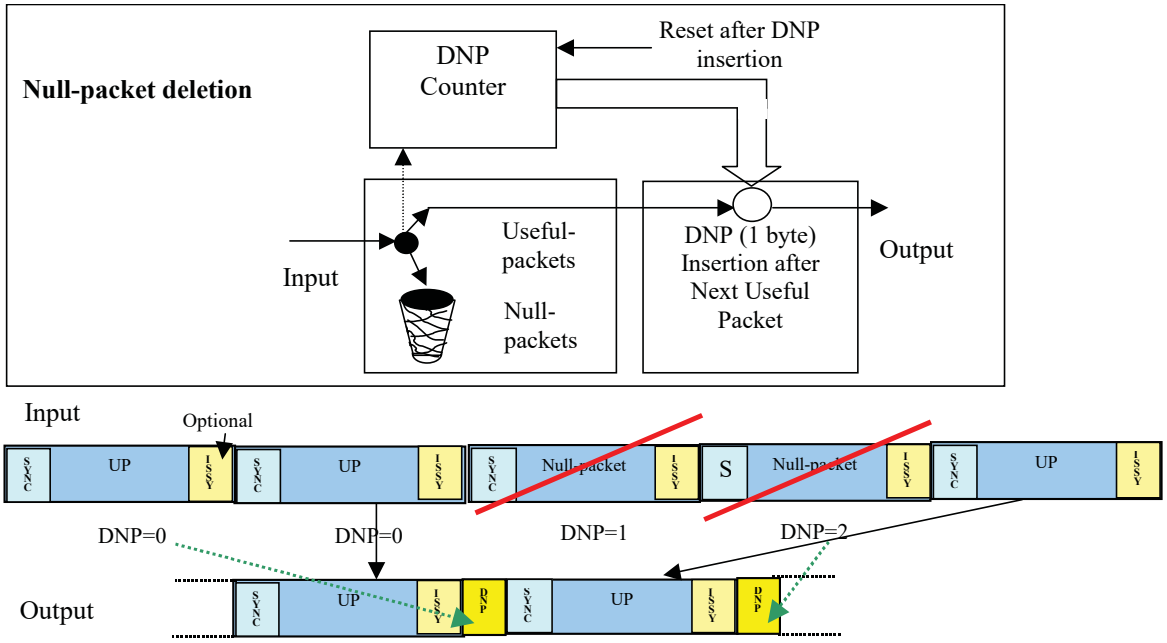

Figure D.3: Null-packet deletion and DNP field (1 byte) insertion

D.4 BBHEADER and Merging/slicing Policy for various application areas

According to the application area, BBHeader coding and Merging/slicing policy shall be according to table D.2.

Table D.2: BBHeader coding for various application areas and Merging/Slicing policy

Application area/configuration	MATYPE-1	MATYPE-2	UPL	DFL	SYNC	SYNCD	CRC-8	Merging/ slicing policy
Broadcasting/CCM, single TS	111100Y	X	188_Dx8	K_{bch} – 80_D	47_{HEX}	Y	Y	Break No timeout No Padding No Dummy
Broadcasting, differentiated protection level per stream/ VCM, constant protection level per TS, Multiple TS	1100Y0Y	Y	188_Dx8 (+16 or 24 if ISSYI = 1)	K_{bch} – 80_D	47_{HEX}	Y	Y	Break Read (1) No timeout No Padding Yes Dummy
DSNG with time variable protection level/ACM, single TS input, NP- deletion, ACM Command active	111011Y	X	189_Dx8+ (16 or 24)	K_{bch} – 80_D	47_{HEX}	Y	Y	Break Read (0) No timeout No Padding Yes Dummy
Interactive services with ACM over TS, differentiated protection per stream/ ACM, constant protection level per TS, Multiple TS, NP-deletion	1100Y1Y	Y	189_Dx8 (+16 or 24 if ISSYI = 1)	Y $\leq K_{bch}$– 80_D	47_{HEX}	Y	Y	Read(1) or (2) Yes Padding Yes Dummy YES shortframe (see note)
Interactive services (IP) with ACM over GS, differentiated protection per stream/ ACM, constant protection level per input stream, Multiple Generic Stream	010000Y	Y	0	Y $\leq K_{bch}$– 80_D	X	X	Y	Read(1) or (2) Yes Padding Yes Dummy YES shortframe (see note)
Interactive services (IP) with ACM over GS, time variable protection/ ACM, time variable protection level, Single Generic Stream, ACM Command active	011000Y	X	0	Y $\leq K_{bch}$– 80_D	X	X	Y	According to ACM Command Yes Padding Yes Dummy YES shortframe
BC Broadcasting services	111100Y	X	188_Dx8	K_{bch} – 80_D	47_{HEX}	Y	Y	Break No timeout No Padding No Dummy

X = not defined; Y = according to configuration/computation Break = break packets in subsequent DATAFIELDs; Timeout: maximum delay in merger/slicer buffer.
Read (0) = Read [K_{bch} (Normal FECFRAME)– 80] bits when available, otherwise dummy.
Read (1) = Round-robin polling. Read [K_{bch} (Normal FECFRAME)– 80] bits from port i when available, otherwise poll the next port.
Read (2) = On timeout, read DFL bits from port i and select the shortest FECFRAME containing DFL.
NOTE: Additional merging policy modes may be optionally implemented by manufacturers.

D.5 Signalling of reception quality via return channel (Normative for ACM)

In ACM modes, the receiver shall signal the reception quality via an available return channel, according to the various DVB interactive systems, such as for example DVB-RCS (EN 301 790 [7]), DVB-RCP (ETS 300 801 [8]), DVB-RCG (EN 301 195 [9]), DVB-RCC (ES 200 800 [10]).

DVB "Network Independent Protocols for DVB Interactive Services" (ETS 300 802 [12]) may be adopted to achieve maximum network interoperability. Other simpler or optimized solutions (e.g. to guarantee minimum signalling delay) may be adopted to directly interface with the aforementioned DVB interactive systems.

The receiver shall evaluate quality-of-reception parameters, in particular carrier to noise plus interference ratio in dB available at the receiver, indicated as **CNI.** CNI format shall be:

$$CNI = 20 + 10 \{10 \, Log_{10}[C/(N+I)]\} \text{ (positive integer, 8 bits, in the range 0 to 255).}$$

In fact for DVB-S2 $10 \, Log_{10}[C/(N+I)]$ may be in the range -2 dB to +23,5 dB.

$10 \, Log_{10}[C/(N+I)]$ shall be evaluated with a quantized accuracy better than 1 dB (accuracy = mean error + 3 σ, where σ is the standard deviation). Since modulation and coding modes for DVB-S2 are typically spaced 1 dB to 1,5 dB apart, a quantized precision better than 0,3 dB is recommended in order to fully exploit system capabilities. The measurement process is assumed to be continuous. A possible method to evaluate CNI is by using symbols known a-priori at the receiver, such as those in the SOF field of the PLFRAME Header and, when available, pilot symbols.

CNI and other optional reception quality parameters (such as for example the BER on the channel evaluated by counting the errors corrected by the LDPC decoder, the packet error rate detected by CRC-8, the CNI distance from the QEF threshold) may optionally be used by the receiver to identify the maximum throughput DVB-S2 transmission mode that it may decode at QEF, indicated by MODCOD_RQ (7 bits, b_6, ..., b_0) where:

- (b_4, ..., b_0) are coded according to MODCOD in table 12;
- b_5 indicates the presence/absence of pilots: (b_5 = 0 no pilots, b_5 = 1 pilots);
- b_6 = 1 indicates (b_5, ..., b_0) are valid; b_6 = 0 indicates (b_5, ..., b_0) information is not available by the terminal.

As a minimum, the CNI and MODCOD_RQ parameters shall be sent to the satellite network operator Gateway every time the protection on the DVB-S2 channel has to be changed. When no modification of the protection level is requested, the optional message from the terminal to the Gateway shall indicate MODCOD_RQ = actual MODCOD and pilot configuration of the frames received by the terminal. In specific applications, CNI and MODCOD_RQ fields may be extended to an integer number of byte(s), by padding zeroes in MSB positions.

The maximum delay required for CNI and MODCOD evaluation and delivery to the Gateway via the interaction channel shall be no more than 300 ms, but this delay should be minimized if services interruptions are to be avoided under fast fading conditions (C/N+I variations as fast as 0,5 dB/s to 1 dB/s may occur in Ka band). Optionally the gateway may acknowledge the reception of the message and the execution of the command by a message containing the new adopted MODCOD, coded according to table 12. The allocated protection shall be equal or more robust than that requested by the terminal.

Example Transmission Protocol using [12**]**

DVBS2_Change_Modcod message shall be sent from the receiving terminal to the satellite network operator gateway, every time the protection on the DVB-S2 channel has to be changed.

```
DVBS2_Change_Modcod()   length in bits (big-endian notation)
{
    CNI;        8
    MODCOD_RQ;  8
}
```

DVBS2_Ack_Modcod message shall optionally be sent from the Gateway to the receiving terminal to acknowledge the DVB-S2 protection level modification. MODCOD_ACK shall be coded according to the MODCOD_RQ conventions.

```
DVBS2_Ack_Modcod()  length in bits (big-endian notation)
{
    MODCOD_ACK; 8
}
```

Annex E (normative): SI and signal identification for DSNG and contribution applications

In DSNG transmissions, editing of the SI tables in the field may be impossible due to operational problems. Therefore, only the following MPEG.2-defined SI tables PAT, PMT and Transport Stream Descriptor Table (TSDT) are mandatory. DSNG transmission using DVB-S2 shall implement SI according to annex D of EN 301 210 [3].

Satellite transmissions may be affected by interference problems, which may be generated by SNG stations not strictly adhering to standard operating regulations. Although solutions to this problem are mostly based on operational rules, DVB-S2 provides technical means to allow interfering station identification. DVB-S2 up-link stations (except stations for broadcast services) shall make their signal identifiable by applying the Physical Layer Scrambling initialization sequence n (n in the range [0, 262 141]; see clause 5.5.4) assigned to each station owner.

Annex F (normative): Backwards Compatible modes (optional)

Optional Backwards Compatible (BC) modes are intended to send, on a single satellite channel, two Transport Streams, the first (High Priority, HP) being compatible with DVB-S receivers (according to EN 300 421 [2]) as well as with DVB-S2 receivers, the second (Low Priority, LP) being compatible with DVB-S2 receivers only. Backwards compatibility can be optionally implemented according to two approaches:

- layered modulations, where a DVB-S2 and a DVB-S signals are asynchronously combined on the radio-frequency channel (therefore this operational mode does not require any specific tool in the DVB-S2 specification).
- hierarchical modulation, where the two HP and LP Transport Streams are synchronously combined at modulation symbol level on an asymmetric 8PSK constellation.

NOTE 1: Hierarchical modes are also used in EN 300 744.

NOTE 2: Also other non-DVB legacy broadcast services based on QPSK may transmit a DVB-S2 LP stream, using the aforementioned hierarchical and layered modulation schemes.

Figure F.1 schematically represents the hierarchical transmission system structure: it consists of two branches, the first compliant with DVB-S standard for the high priority layer, the second increasing the constellation dimensionality to a non-uniform 8PSK for the low priority layer.

Figure F.2 shows the non-uniform 8PSK transmitted constellation.

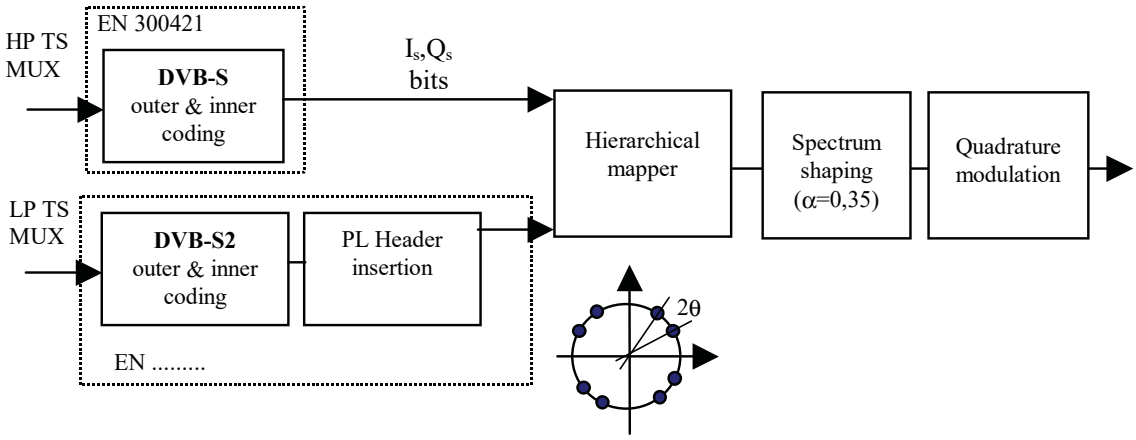

Figure F.1: Functional block diagram of hierarchical backward compatible DVB-S2 system

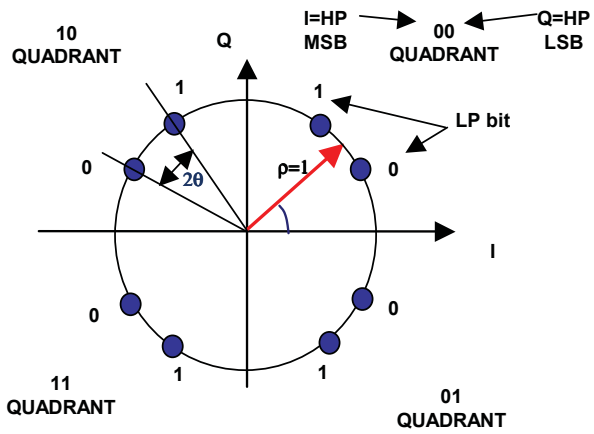

Figure F.2: Non-uniform 8PSK constellation

For hierarchical modulation, the LP DVB-S2 compliant signal shall be BCH and LDPC encoded, with LDPC code rates 1/4, 1/3, 1/2 or 3/5. The LP stream shall be generated by the DVB-S2 system according to figure 1. The hierarchical mapper shall map three bits per symbol as in the figure F.2:

- one bit from the DVB-S2 LDPC encoded signal, following PLHEADER insertion; two bits from the HP DVB-S encoder.

The deviation angle θ may vary according to user requirements.

NOTE: θ may be constrained by legacy receiver performance, such as carrier recovery cycle slips: large θ figures improve LP ruggedness against noise and interference, but penalize HP. clause H.6 gives examples of the HP and LP performance versus θ.

The PLHEADER sequence shall comprise 90 bits to indicate the LP code rate being transmitted, as follow, shown octal encoded, MSB (leftmost bit) transmitted first:

- 441647550603300214057262124712 indicates 1/4 rate;
- 753012530643221406326217103300 indicates 1/3 rate;
- 247124232750142006603055713411 indicates 1/2 rate;
- 006604742326301422613065240657 indicates 3/5 rate.

Dummy Frames and short frames shall not be used for BC modes.

Table F.1 gives the number of SLOTs per FECFRAME in the LP stream. Table F.2 gives the bit-rate ratio (%) of the LP stream versus the HP stream.

Table F.1: S = number of SLOTs (M = 90 symbols) per FECFRAME

n_{ldpc} = 64 800 (normal frame)	
η_{MOD} (bit/s/Hz) for LP stream	S
1	720

Table F.2: (LP bit-rate/HP bit-rate)x100 [%]

	DVB-S2 Coding (LP)			
DVB-S Coding (HP)	**1/4**	**1/3**	**1/2**	**3/5**
1/2	26,6	35,7	53,7	64,6
2/3	20,0	26,7	40,3	48,4
3/4	17,8	23,8	35,8	43,0
5/6	16,0	21,4	32,2	38,7
7/8	15,2	20,4	30,7	36,9

Annex G (informative): Supplementary information on receiver implementation

Receiver specification is not under the scope of the present document. Nevertheless the DVB-S2 specification has been developed devoting a large effort to technical evaluations on the receiver design, in order to guarantee that the end-to-end performance target may be met. Typical impairments that may significantly impact the performance of the receiver are:

- phase noise of the LNB and tuner;
- quality of the transmitter and/or receiver oscillators;
- adjacent channel interference;
- satellite non-linearity.

This clause includes some tutorial material on receiver implementation, although other techniques may be used offering the target functionalities and receiver performance.

G.1 Carrier recovery

A significant portion of DVB-S2 deployment will replace/enhance the current DVB-S users. In this situation, it is highly desirable that the outdoor equipment including the LNB will be retained. Extensive simulation studies have been carried out, using the critical phase noise model of consumer LNB from annex H.8, and implementing variants of three baseline carrier recovery techniques:

- decision directed digital phase locked loops with "blind" phase error detection (DD-PLL), operating on the modulated symbols;
- pilot-symbol aided DD-PLL (phase estimations extracted from the pilot symbols and from the PLHEADER are used to reset the DD-PLL circuit, which otherwise operates on the modulated symbols);
- pilot-symbol interpolation techniques (phase estimations extracted from the pilot symbols are interpolated over the modulated symbols).

With the receiver algorithms taken into consideration, the simulation results demonstrate that carrier synchronization can be achieved in presence of phase noise and worst-case thermal noise for any DVB-S2 mode. Some of the transmission modes, such as for example 8PSK rate 3/5 and rate 2/3, 16APSK rate 3/4, 32APSK 4/5 required the use of pilot symbols to avoid cycle slips. For ACM operation, the use of pilot symbols can guarantee continuous receiver synchronization.

G.2 FEC decoding

LDPC codes are linear block codes with sparse parity check matrices $H_{(n-k)xn}$.

As an example, an LDPC code of length $N = 8$ and rate ½ can be specified by the following parity check matrix.

$$H = \begin{array}{c} \begin{array}{cccccccc} n_1 & n_2 & n_3 & n_4 & n_5 & n_6 & n_7 & n_8 \end{array} \\ \begin{bmatrix} 1 & 0 & 0 & 1 & 1 & 0 & 0 & 1 \\ 0 & 1 & 1 & 0 & 1 & 0 & 1 & 0 \\ 1 & 0 & 1 & 0 & 0 & 1 & 0 & 1 \\ 0 & 1 & 0 & 1 & 0 & 1 & 1 & 0 \end{bmatrix} \end{array} \begin{array}{c} \\ m_1 \\ m_2 \\ m_3 \\ m_4 \end{array}$$

The same code can be equivalently represented by the bipartite graph in figure G.1(a) which connects each check equation (check node) to its participating bits (bit nodes).

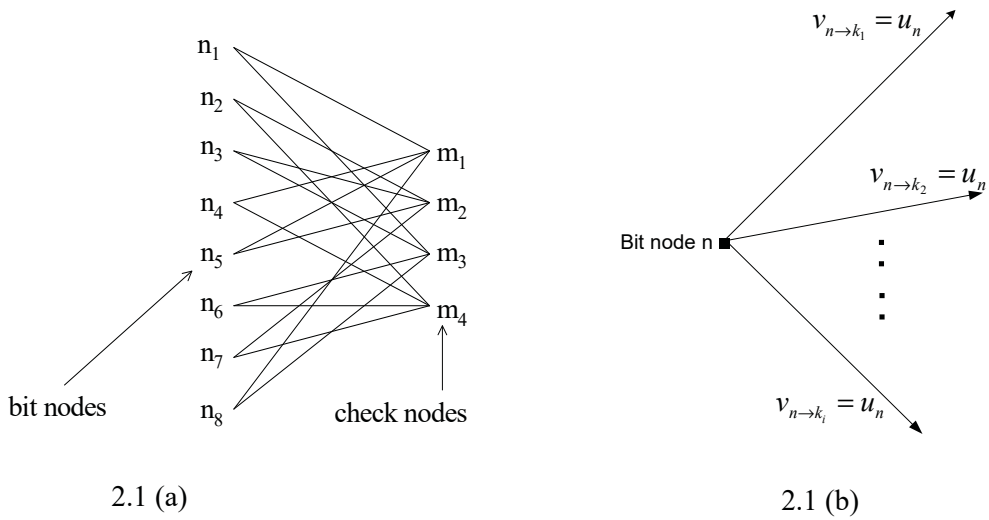

Figure G.1: (a) Bipartite graph of an LDPC code;
(b) Initialization of outgoing messages from bit nodes

The purpose of the decoder is to determine the transmitted values of the bits. Bit nodes and check nodes communicate with each other to accomplish that. The decoding starts by assigning the channel values to the outgoing edges from bit nodes to check nodes. Upon receiving that, the check nodes make use of the parity check equations to update the bit node information and send it back. Each bit node then performs a soft majority vote among the information reaching him. At this point, if the hard decisions on the bits satisfy all of the parity check equations, it means a valid codeword has been found and the process stops. Otherwise bit nodes go on sending the result of their soft majority votes to the check nodes. In the following clauses, we describe the decoding algorithm in detail. The number of edges adjacent to a node is called the degree of that node.

- Initialization:

$$v_{n\to k_i} = u_n, \quad n = 0,1,...,N-1, \quad i = 1,2,...,\deg(bit\,node\,n)$$

  Here $v_{n\to k_i}$ denotes the message that goes from bit node n to its adjacent check node k_i, u_n denotes the channel value for the bit n and N is the codeword size. The initialization process is also shown in figure G.1(b).

- Check node update:

  Let us denote the incoming messages to the check node k from its d_c adjacent bit nodes by $v_{n_1\to k}, v_{n_2\to k},..., v_{n_{dc}\to k}$ (see figure G.2(a)). Our aim is to compute the outgoing messages from the check node k back to d_c adjacent bit nodes. Let us denote these messages by $w_{k\to n_1}, w_{k\to n_2},..., w_{k\to n_{dc}}$.

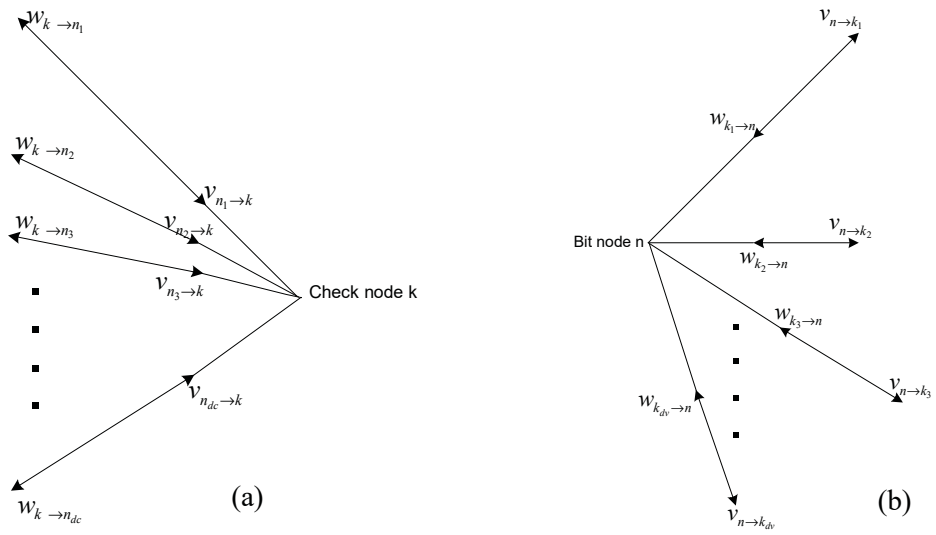

Figure G.2: Message update at check nodes (a), and at bit nodes (b)

$$w_{k\to n_i} = g(v_{n_1\to k}, v_{n_2\to k}, ..., v_{n_{i-1}\to k}, v_{n_{i+1}\to k}, ..., v_{n_{dc}\to k})$$

where $g(a,b) = sign(a)\times sign(b)\times\{\min(|a|,|b|)\} + LUT_g(a,b)$

and $LUT_g(a,b) = \log(1+e^{-|a+b|}) - \log(1+e^{-|a-b|})$

- Bit Node Update:

Let us denote the incoming messages to the bit node n from its d_v adjacent check nodes by $w_{k_1\to n}, w_{k_2\to n}, ..., w_{k_{dv}\to n}$ (see figure G.2(b)). Our aim is to compute the outgoing messages from the bit node n back to d_v adjacent check nodes. Let us denote these messages by $v_{n\to k_1}, v_{n\to k_2}, ..., v_{n\to k_{dv}}$.

They are computed as follows: $v_{n\to k_i} = u_n + \sum_{j\neq i} w_{k_j\to n}$

- Hard Decision Making:

After the bit node updates, hard decision can be made for each bit n by looking at the sign of $v_{n\to k_i} + w_{k_i\to n}$ for any k_i . If the hard decisions satisfy all the parity check equations, it means a valid codeword has been found, therefore the process stops. Otherwise another check node/bit node update is performed. If no convergence is achieved after a pre-determined number of iterations, the current output is given out. As SNR increases, the decoder converges with fewer iterations.

G.3 ACM: Transport Stream regeneration and clock recovery using ISCR

When the modulator operates in ACM mode (null-packet deletion active), the receiver may regenerate the Transport Stream by inserting, before each useful packet, DNP in the reception FIFO buffer. As shown in figure G.3, the Transport Stream clock R'_{IN} may be recovered by means of a Phase Locked Loop (PLL). The recovered symbol-rate R_s may be used to clock a local counter (which by definition runs synchronously with the input stream synchronization counter of figure D.2, apart from the Satellite Doppler frequency shift). The PLL compares the local counter content with the transmitted ISCR of each TS packet, and the phase difference may be used to adjust the R'_{IN} clock. In this way R'_{IN} remains constant, and the reception FIFO buffer automatically compensates the chain delay variations. Since the reception FIFO buffer is not self-balancing, the BUFSTAT and the BUFS information may be used to set its initial state.

As an alternative, when dynamic variations of the end-to-end delay and bit-rate may be acceptable by the source decoders, the receiver buffer filling condition may be used to drive the PLL. In this case the reception buffer is self-balancing (in steady state half of cells are filled), and the ISSY field may be omitted at the transmitting side.

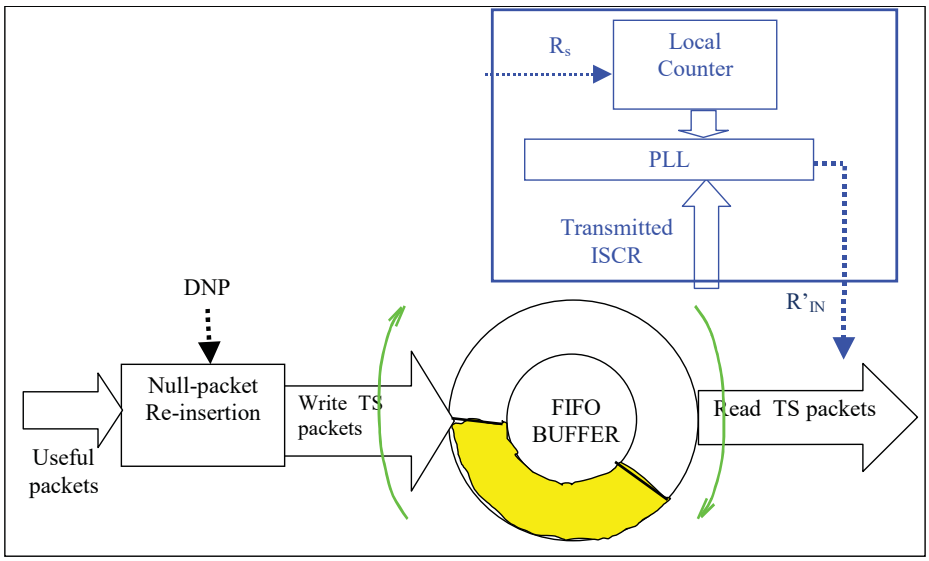

Figure G.3: Example receiver block diagram for Null-packet re-insertion and R_{TS} clock recovery

G.4 Non linearity pre-compensation and Intersymbol Interference suppression techniques

A significant feature of DVB-S2 standard is to support high-order modulation such as 16 APSK and 32 APSK. These modulation schemes, although specifically designed for non-linear channels, are particularly sensitive to the characteristics of the satellite transponders. Computer simulation studies, based on the use of the satellite transponder model of clause H.7, demonstrated that there are significant opportunities to further enhance the performance by pre-distortion of the transmitted signal and/or intersymbol interference suppression technique in the receiver.

G.5 Interactive services using DVB-RCS return link: user terminal synchronization

Interactive services can be operated with a DVB-RCS (EN 301 790 [7]) return path, provided that an absolute time reference (NCR, Network Clock Reference) can be generated in the user terminal for transmissions alignment. In DVB-RCS the hub broadcasts the NCR in the form of special transport packets over the forward link. In case of DVB-S2 forward link, NCR shall be associated to the emission time, at the transmitting side, of the first symbol of the SOF field.

In order to facilitate RCS synchronization at user terminal, a "SOF flag" output should be included in the DVB-S2 receiver chipset. Furthermore, in order to allow alignment of the SOF flag with the relevant NCR, the receiver chipset should implement an internal counter of the received physical layer frames (e.g. modulo M = 32), with arbitrary start-up. The counter content should label both the "SOF flag" and the decoded data at the chip output. In practical implementations the SOF flag label could be signalled serially on the SOF flag signal and the frame label on another signal.

Annex H (informative): Examples of possible use of the System

H.1 CCM digital TV broadcasting: bit rate capacity and C/N requirements

The DVB-S2 system may be used in "single carrier per transponder" or in "multi-carriers per transponder" (FDM) configurations. In single carrier per transponder configurations, the transmission symbol rate R_S can be matched to given transponder bandwidth BW (at -3 dB), to achieve the maximum transmission capacity compatible with the acceptable signal degradation due to transponder bandwidth limitations. To take into account possible thermal and ageing instabilities, reference can be made to the frequency response mask of the transponder. Group delay equalization at the transmitter may be used to increase the transmission capacity or to reduce degradation.

In the multi-carrier FDM configuration, R_S can be matched to the frequency slot BS allocated to the service by the frequency plan, to optimize the transmission capacity while keeping the mutual interference between adjacent carriers at an acceptable level.

Figure H.1 gives examples of the useful bit rate capacity R_u achievable by the System versus the LDPC code rate, assuming unit symbol rate R_S. The symbol rate R_S corresponds to the -3 dB bandwidth of the modulated signal. R_S $(1+\alpha)$ corresponds to the theoretical total signal bandwidth after the modulator. The figures refer to Constant Coding and Modulation, normal FECFRAME length (64 800 bit), no PADDING field, no pilots (the pilots would reduce the efficiency by about 2,4 %). Typical BW/ R_S or BS/ R_S ratios are $1 + \alpha = 1{,}35$ and 1,20, where α is the roll-off factor of the modulation. This choice allows to obtain a negligible E_S/N_o degradation due to transponder bandwidth limitations, and also to adjacent channel interference on a linear channel. BW/ R_S factors $< 1 + \alpha$ may also be adopted, but careful studies should be carried-out on a case-by-case basis to avoid unacceptable interference and distortion levels.

Figure H.2 shows the required C/N (Carrier-to-Noise power ratio measured in a bandwidth equal to the symbol rate) versus the spectrum efficiency (useful bit-rate for unit symbol rate R_S), obtained by computer simulations on the AWGN channel (ideal demodulator, no phase noise). The performance of DVB-S and DVB-DSNG is also shown for comparison, for the same quality target PER = 10^{-7}. Before Nyquist filtering in the modulator, the peak-to-average power ratio is 0 dB for QPSK and 8PSK, while it is in the range [1,05 ÷ 1,11] dB for 16APSK (the exact value can be calculated using expression $4\,\gamma^2/(3\,\gamma^2 + 1)$) and [1,97 ÷ 2,12] dB for 32APSK (the exact expression is $8\,\gamma_2^2/(4\,\gamma_2^2 + 3\gamma_1^2 + 1)$). When DVB-S2 is transmitted by satellite, quasi-constant envelope modulations, such as QPSK and 8PSK, are power efficient in single carrier per transponder configuration, since they can operate on transponders driven near saturation. 16APSK and 32APSK, which are inherently more sensitive to non-linear distortions and would require quasi-linear transponders (i.e. with larger Output-Back-Off, OBO) may be improved in terms of power efficiency by using non-linear compensation techniques in the up-link station.

The use of the narrower roll-off $\alpha = 0{,}25$ and $\alpha = 0{,}20$ may allow a transmission capacity increase but may also produce larger non-linear degradations by satellite for single carrier operation.

In the FDM configuration, the satellite transponder must be quasi-linear (i.e. with large Output-Back-Off, OBO) to avoid excessive intermodulation interference between signals.

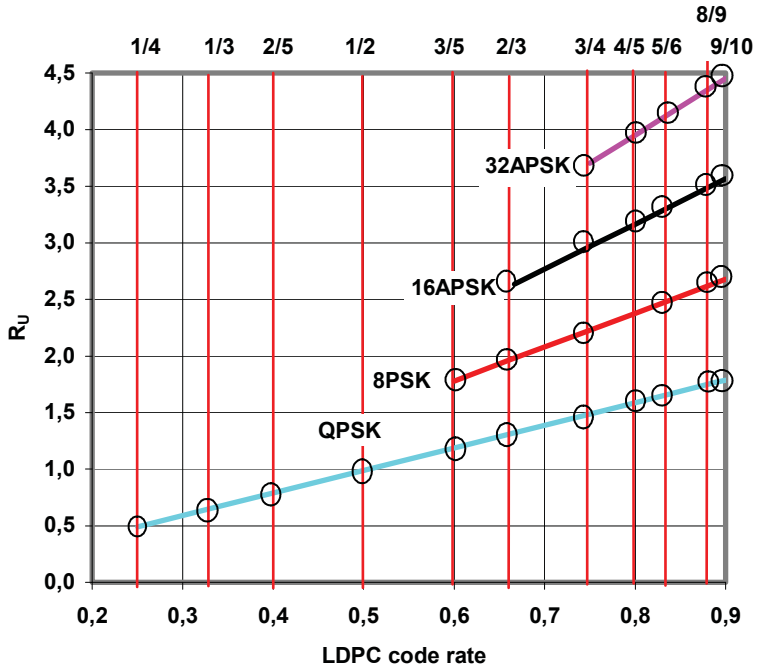

Figure H.1: Examples of useful bit rates R_u versus LDPC code rate per unit symbol rate R_s

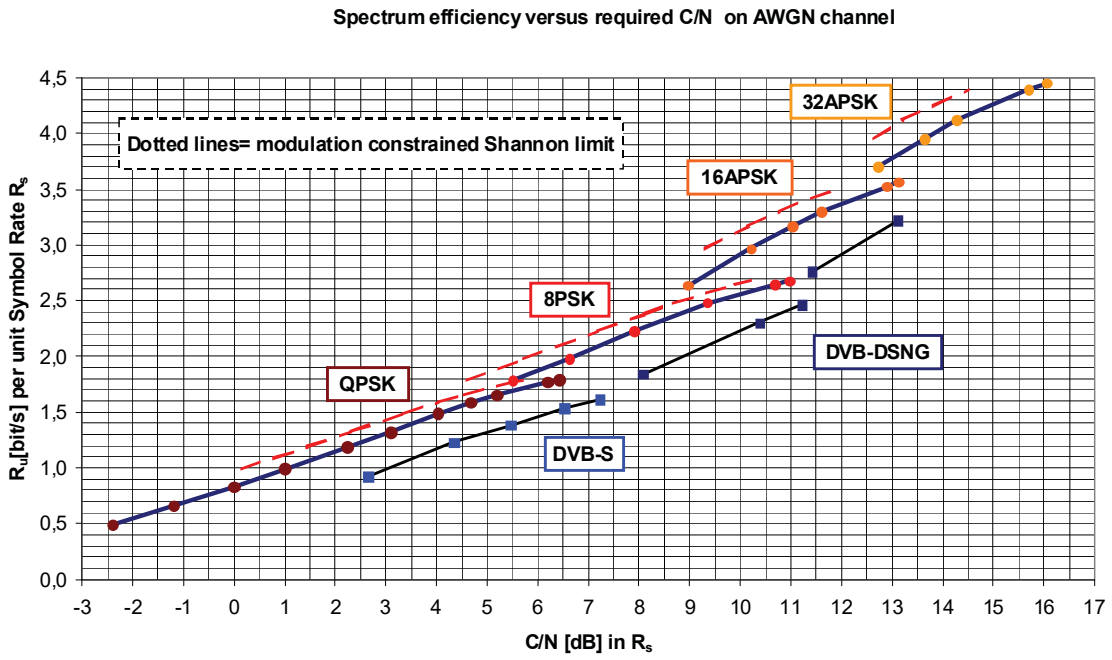

Figure H.2: Required C/N versus spectrum efficiency, obtained by computer simulations on the AWGN channel (ideal demodulator) (C/N refers to average power)

Table H.1 shows the C/N degradation measured by computer simulations using the satellite channel models given in annexes H.7 (non linearized TWTA) and H.8. The following parameters have been simulated: R_S = 27,5 Mbaud, roll-off = 30 % (not available in DVB-S2, but giving performance between roll-off 0,35 and 0,25), dynamic pre-distortion memory M = 5 (for QPSK, 8PSK and 16APSK), M = 3 (for 32APSK).C_{SAT} is the un-modulated carrier power at HPA saturation, OBO is the measured power ratio (dB) between the un-modulated carrier at saturation and the modulated carrier (after OMUX). The considered phase noise mask is relevant to a low-cost consumer LNB, while for professional applications lower degradations may be expected.

Table H.1: C/N degradation [dB] on the satellite channel (simulation results)

Transmission Mode	C_{SAT}/N loss [dB] no predistortion without Phase Noise	C_{SAT}/N loss [dB] with dynamic predistortion without Phase Noise	C_{SAT}/N loss [dB] with dynamic predistortion with Phase Noise
QPSK 1/2	0,62 (IBO = 0; OBO = 0,33)	0,5 (IBO = 0 dB; OBO = 0,38)	0,63
8PSK 2/3	0,95 (IBO = 0,5; OBO = 0,35)	0,6 (IBO = 0;OBO = 0,42)	0,85
16APSK 3/4	3,2 (IBO = 5; OBO = 1,7)	1,5 (IBO = 1; OBO = 1,1)	1,8
32APSK 4/5	6,2 (IBO = 9; OBO = 3,7)	2,8 (IBO = 3,6; OBO = 2,0)	3,5

H.2 Distribution of multiple TS multiplexes to DTT Transmitters (Multiple TS, CCM)

The DVB-S2 system is suitable for the distribution of N MPEG multiplexes to digital terrestrial transmitters, using a single carrier per transponder configuration, thus optimizing the power efficiency by saturating the satellite HPA (with the DVB-S system N carriers per transponder should be transmitted, requiring a large HPA OBO). For example, assuming the availability of a BW = 36 MHz transponder, a symbol rate of 30 Mbaud may be transmitted using α = 0,20. Thus to transmit two DTT MUXes at 24 Mbit/s each, a spectrum efficiency of 1,6 [bit/s/Hz] is required, corresponding to QPSK rate 5/6 (required C/N = 5,2+0,7 dB + implementation margin). Figure H.3 shows an example of possible configuration at the transmitting side.

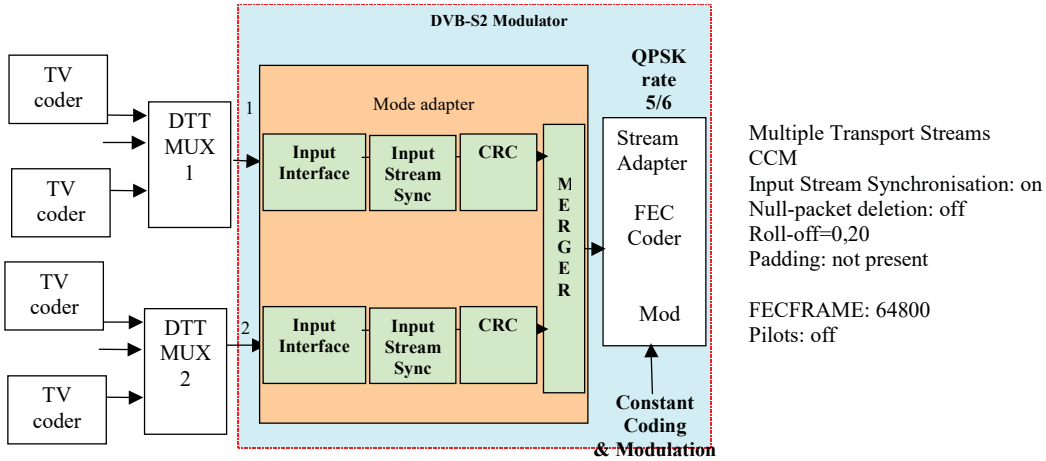

Figure H.3: Example of DVB-S2 configuration for multiple DTT multiplexes distribution by satellite

H.3 SDTV and HDTV broadcasting with differentiated protection (VCM, Multiple TS)

The DVB-S2 system may deliver broadcasting services over multiple Transport Streams, providing differentiated error protection per Mux (VCM mode). A typical application is broadcasting of a highly protected Mux for SDTV, and of a less protected Mux for HDTV. It should be noted that the DVB-S2 system is unable to differentiate error protection within the same TS Mux. Figure H.4 shows an example configuration at the transmitting side. Assuming to transmit 27,5 Mbaud and to use 8PSK 3/4 and QPSK 2/3, 40 Mbit/s would be available for two HDTV programmes and 12 Mbit/s for two SDTV programmes. The difference in C/N requirements would be around 5 dB to 5,5 dB.

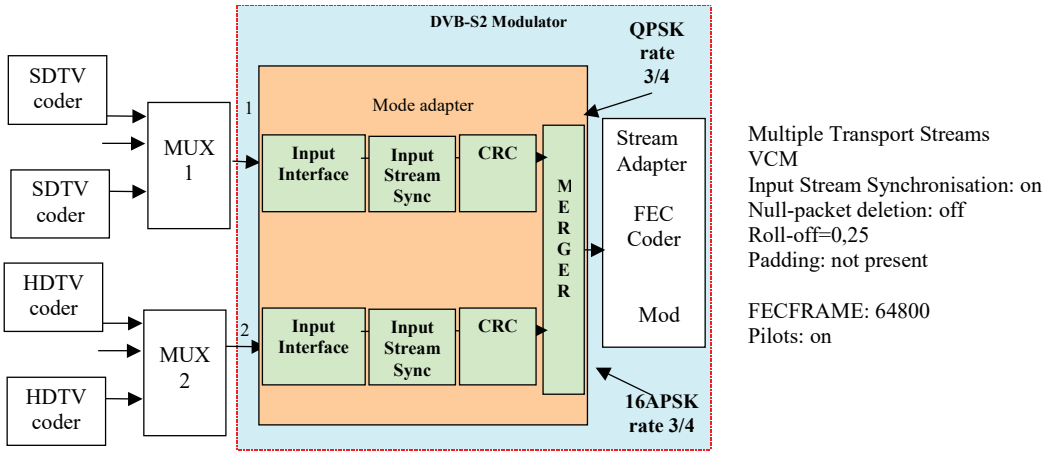

Figure H.4: Example DVB-S2 configuration for TV and HDTV broadcasting using VCM

H.4 DSNG Services using ACM (Single transport Stream, information rate varying in time)

In point-to-point ACM links, where a single TS is sent to a unique receiving station (e.g. DSNG), the TS packets protection must follow the C/N+I variations on the satellite channel in a given receiving location. When propagation conditions change (see figure H.5, arrow), the PLFRAMEs F_i switch from protection mode M_j to protection mode M_K to guarantee the service continuity.

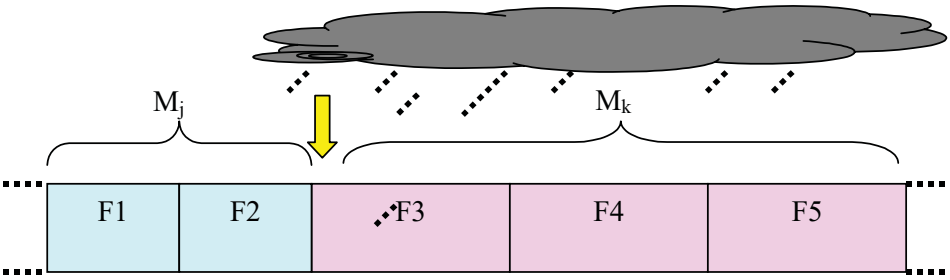

Figure H.5: PLFRAMEs changing protection during a rain fading

The DVB-S2 system may operate as follows (see figure H.6, showing also example evaluation of the chain loop delays D.1 to D.8):

1) the bit-rate control unit keeps the VBR source bit-rate (e.g. video encoder) at the maximum level compatible with the actual channel conditions C/N+I. In parallel, it sets the DVB-S2 modulator transmission mode via the "ACM Command" input port.

2) the TS bit-rate is set at the maximum level receivable at QeF in clear sky. The TS multiplexer adds null-packets to generate the constant bit-rate R_{TS}.

3) Null Packets (NP) are deleted in the Mode Adapter, so that the actual bit-rate on the channel corresponds to the source bit-rate. The deleted NPs are signalled in the DNP byte.

4) the receiver re-inserts Null Packets exactly in the original position (by decoding DNP), and the Transport Stream clock is regenerated using the Input Stream Clock Reference (ISCR).

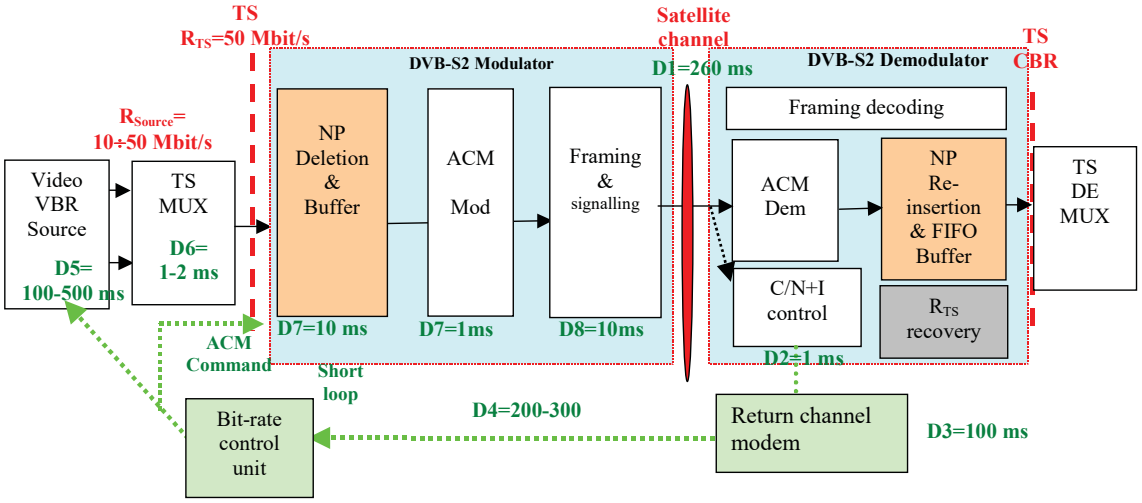

Figure H.6: Single TS - uniform protection for long periods: transmission and receiving schemes

With reference to figure H.6, during a fast fading the bit rate control unit may impose a rate reduction first on the source encoder, and only after the command has been executed (e.g. after 100 ms to 500 ms), to the DVB-S2 modulator (via ACM Command). A drawback of this configuration is that the video encoder and MUX delays (D5 and D6 in figure H.6) are included in the control loop, with the risk of service outage under fast fading conditions. To overcome this additional delay the ACM Command can be instantly delivered also to the modulator, but to avoid packet losses large buffers have to be inserted in the DVB-S2 modulator and demodulator.

H.5 IP Unicast Services (Non-uniform protection on a user-by-user basis)

Figure H.7 shows a possible exchange of information (info request and info response) between the user, the Satellite Gateway and the information provider during an Internet navigation session by satellite (forward high capacity link).

These interactive data services may take advantage of:

- non-uniform error protection (ACM);
- differentiated service levels (priority in the delivery queues).

According to the negotiation between the user terminal and the "ACM routing manager", an "ACM router" may in principle separate IP packets per user, per required error protection and per service level. The aggregate input traffic on the various protection levels shall not overload the available channel capacity; this applies to the average input traffic, while the peak traffic may temporarily exceed it, compatibly with the input buffering capacity and the service requirements on maximum delays.

To fulfil this rule, when the total offered traffic becomes larger than the channel capacity, lower priority IP packets may be delayed (or even dropped) in favour of high priority packets. If the control-loop delays (including routing manager and ACM router) are too large to allow error free reception under fast-fading conditions, real time services (e.g. video/audio streaming) may be permanently allocated to a high protection branch, while lower priority services (e.g. best effort) may exploit the higher efficiency (i.e. lower cost) provided by ACM. It should be noted that the polling strategy of the input buffers may be statically or dynamically profiled according to the traffic statistics, the propagation characteristics, and the traffic prioritization policy of the service operator.

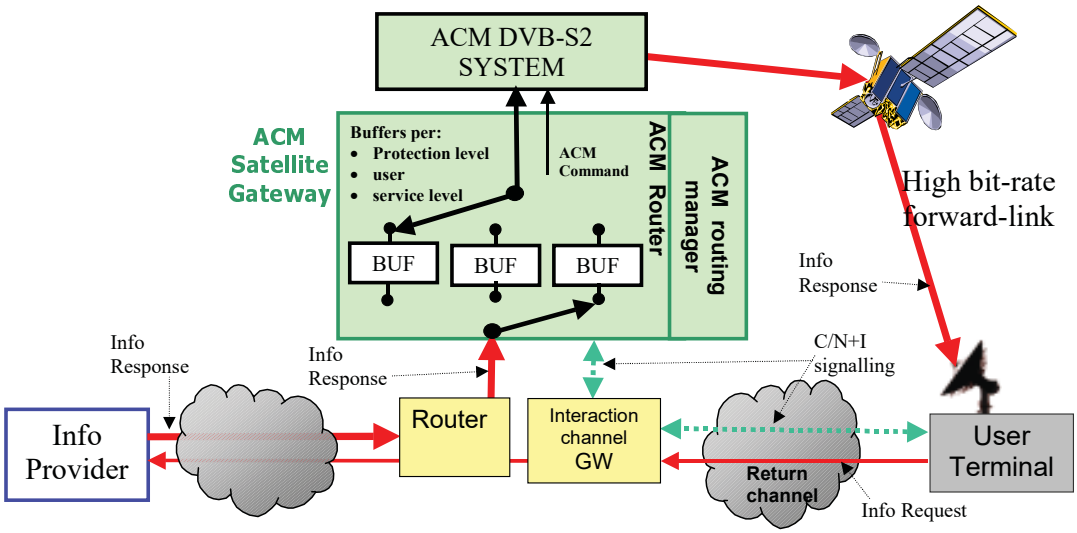

Figure H.7: Example of IP services using a DVB-S2 ACM link

The ACM router may interface with the DVB-S2 modulator:

- via a Single Generic Stream input and the ACM Command input. In this case the ACM router is independent from the DVB-S2 modulator, and may implement any routing policy. The DVB-S2 modulator immediately transmits the user data according to the ACM Command, therefore the loop delays may be minimized;

- via Multiple (Transport or Generic) Stream inputs, one per each active protection level (the ACM Command interface needs not be active). In this case the DVB-S2 Merger/Slicer partially covers the functionality of the ACM router.

This latter case is represented in more detail in figure H.8. The ACM router splits the users" packets per service level (priority) and per required protection level, and sends them to the multiple DVB-S2 input interfaces, each stream being permanently associated to a given protection level. Therefore each input stream merges the traffic of all the users needing a specific protection level, and its useful bit-rate may (slowly) change in time according to the traffic characteristics. According to table D.2, the Merger/Slicer in figure H.8 cyclically polls the input TS buffers, and conveys to the ACM modulator a block of 'users' data ready to fill (or partially fill) a PLFRAME. A timeout may be defined in order to avoid long delays in each merger/slicer buffer.

Dotted boxes in figure H.8 address the specific case of IP services encapsulated in Transport Streams (Multi-Protocol Encapsulation - MPE), according to EN 301 192 [5]. In this case, K MPE gateways (GTW_i) are associated to K TS Multiplexers, to feed K DVB-S2 input streams (one per active protection level). Null-packet deletion, applied to each branch, reduces the transmitted bit-rate. The decoded TS, after null packets re-insertion, is a valid TS (the input stream synchronizer may optionally be activated). To fully exploit the potential ACM advantages, the additional control-loop delays introduced by the TS-specific equipment (Gateways, TS Muxes) should be minimized.

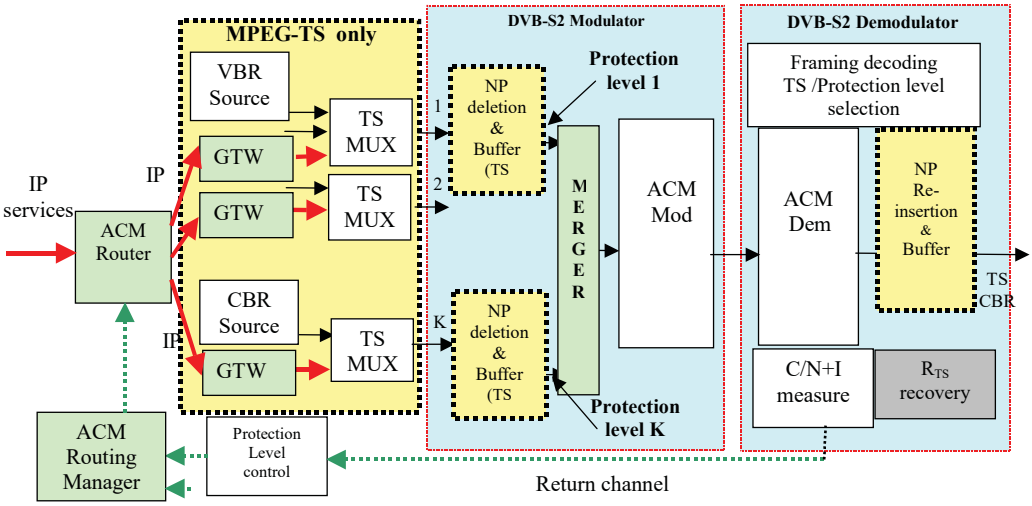

Figure H.8: IP Unicasting and ACM: Multiple input streams - uniform protection per stream (for Generic input Streams, GTWs, TS Muxes and null-packet deletion are not required)

H.6 Example performance of BC modes

Figure H.9 shows the C/N performance (linear AWGN channel) of the HP stream (DVB-S) and of LP stream (DVB-S2) versus the deviation angle θ, achieved under the simplifying assumption that the LP stream degrades the HP stream as a Gaussian noise of equal power (the C/N figures are according to EN 300 421 [2] for HP and according to table 13 - scaled to BPSK format - for LP, including 0,8 dB implementation margin for both streams). The points of intersection of the curves correspond to balanced HP and LP performance. For example, assuming an available C/N = 10 dB, adopting QPSK 7/8 for the HP DVB-S stream, θ = 12° and rate 1/3 LP DVB-S2 stream, the total bit rate per unit bandwidth is 1,61 (HP) + 0,33 (LP) = 1,94 bit/s/Hz. In comparison, a DVB-S-only transmission would not be able to fully exploit the available C/N to maximize the total bit rate. The most significant advantages (additional bit-rate at a given C/N) of the BC DVB-S2 system over the legacy DVB-S system can be obtained for large available C/N (i.e. > 9 dB) and for spectral efficiencies above the maximum level offered by DVB-S (QPSK 7/8).

In practical cases, transmission parameters (code rates, θ) should be optimized on a case-by-case basis, taking into account the real channel characteristics.

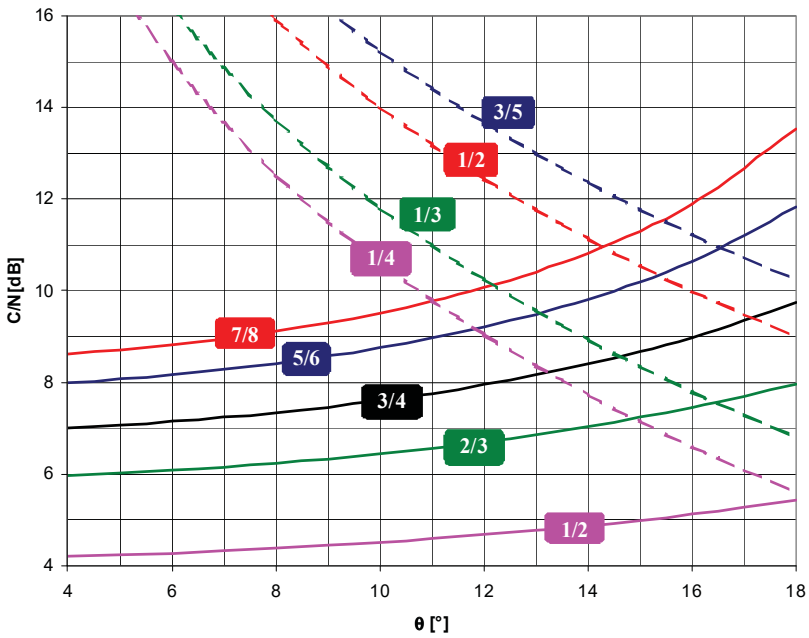

Figure H.9: Example performance of HP and LP backwards compatible streams versus θ

H.7 Satellite transponder models for simulations

For simulations, the "transparent" (i.e. non regenerative) satellite transponder model may be composed of an input filter (IMUX), a power amplifier (TWT or SSA) and an output filter (OMUX). Two amplifier models are here defined, the linearized TWTA (LTWTA) and the non-linearized TWTA. SSPAs have not been considered since they are less critical than TWTAs in terms of degradations.

The reference symbol rate with the specified IMUX/OMUX filter bandwidth is Rs = 27,5 Mbaud.

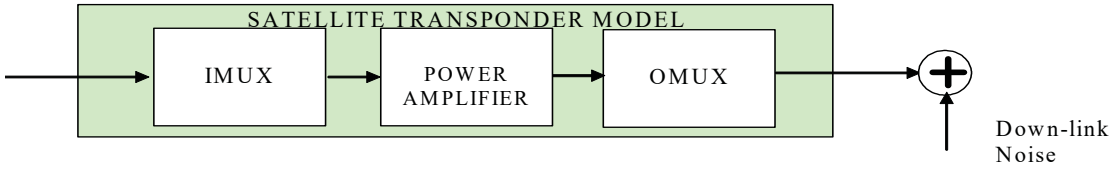

Figure H.10: Satellite transponder model

Figures H.11 and H.12 give the AM/AM and AM/PM TWTA characteristics.

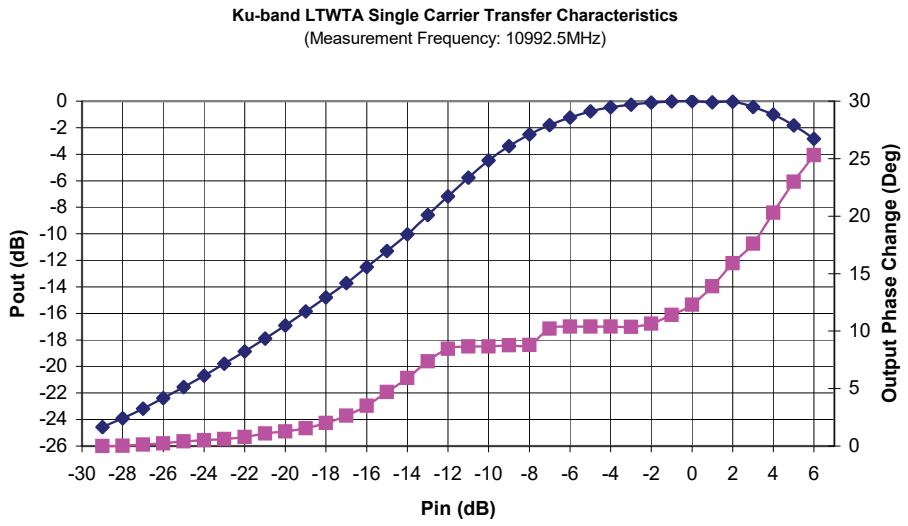

Figure H.11: Linearized TWTA characteristic

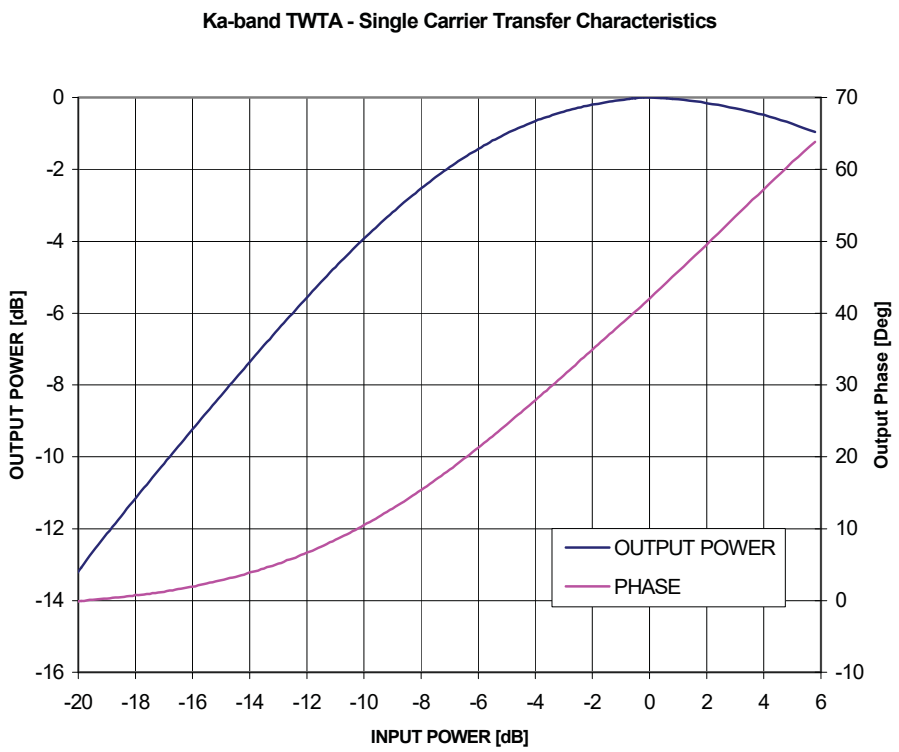

Figure H.12: Non-Linearized TWTA characteristic

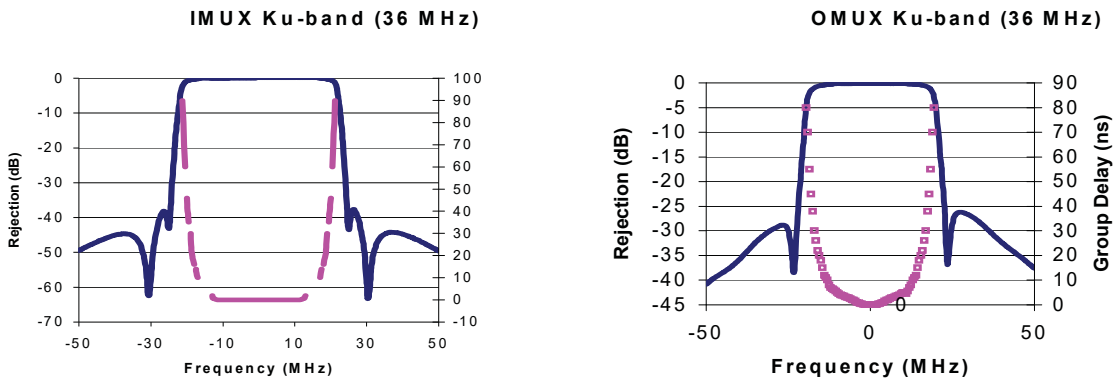

Figure H.13: IMUX and OMUX characteristics

Other transponder bandwidths BW [MHz] may be obtained by scaling the IMUX and OMUX characteristics:

- R(f) = Rejection [f ×(BW/36)].
- G(f) = [(36/BW)] × Group-delay [f × (BW/36)].

The band-centre insertion loss is not indicated, but should be included in C_{SAT} for link budget computation.

H.8 Phase noise masks for simulations

The following phase noise masks for consumer reception systems may be used to evaluate the carrier recovery algorithms. The mask represents single side-band power spectral densities. The "aggregate" masks combine the phase noise contributions of the LNB and of the relevant Tuner. Other sources of phase noise within the chain (e.g. satellite transponder, up-link station, etc.) are usually negligible, and therefore the proposed masks may be considered as representative of the full chain.

Table H.2: Aggregate Phase Noise masks for Simulation (in dBc/Hz)

frequency ⇒	100 Hz	1 kHz	10 kHz	100 kHz	1 MHz	> 10 MHz
Aggregate1 (typical)	-25	-50	-73	-93	-103	-114
Aggregate2 (critical)	-25	-50	-73	-85	-103	-114

Annex I (informative): Bibliography

- ETSI TS 102 005: "Digital Video Broadcasting (DVB); Specification for the use of video and audio coding in DVB services delivered directly over IP".
- R. De Gaudenzi, A. Guillen i Fabregas, A. Martinez Vicente, B. Ponticelli, "*APSK Coded Modulation Schemes for Nonlinear Satellite Channels with High Power and Spectral Efficiency",* in the Proc. of the AIAA Satellite Communication Systems Conference 2002, Montreal, Canada, May 2002, Paper # 1861.
- U. Reimers, A. Morello, "DVB-S2, the second generation standard for satellite broadcasting and unicasting", International Journal on Satellite Communication Networks, 2004; 22.
- M. Eroz, F.-W. Sun and L.-N. Lee, "DVB-S2 Low Density Parity Check Codes with near Shannon Limit Performance", International Journal on Satellite Communication Networks, 2004; 22.
- E. Casini, R. De Gaudenzi, A. Ginesi, "DVB-S2 modem algorithms design and performance over typical satellite channels", International Journal on Satellite Communication Networks, 2004; 22.
- F.-W. Sun Y. Jiang and L.-N. Lee "Frame synchronization and pilot structure for DVB-S2", International Journal on Satellite Communication Networks, 2004; 22.
- A. Morello, R. Rinaldo, M. Vazquez-Castro, "DVB-S2 ACM modes for IP and MPEG unicast applications", International Journal on Satellite Communication Networks, 2004; 22.
- E. Chen, J. L. Koslov, V. Mignone, J. Santoru, "DVB-S2 Backward-Compatible modes: a bridge between the present and the future", International Journal on Satellite Communication Networks, 2004; 22.
- ETSI EN 300 744: "Digital Video Broadcasting (DVB); Framing structure, channel coding and modulation for digital terrestrial television".
- CENELEC EN 50083-9: "Cable networks for television signals, sound signals and interactive services - Part 9: Interfaces for CATV/SMATV headends and similar professional equipment for DVB/MPEG-2 transport streams".
- ETSI EN 300 468: "Digital Video Broadcasting (DVB); Specification for Service Information (SI) in DVB systems".
- ETSI TBR 30 (1997): "Satellite Earth Stations and Systems (SES); Satellite News Gathering Transportable Earth Stations (SNG TES) operating in the 11-12/13-14 GHz frequency bands".
- ETSI ETS 300 327: "Satellite Earth Stations and Systems (SES); Satellite News Gathering (SNG) Transportable Earth Stations (TES) (13-14/11-12 GHz)".
- ETSI EN 300 673: "Electromagnetic compatibility and Radio spectrum Matters (ERM); ElectroMagnetic Compatibility (EMC) standard for Very Small Aperture Terminal (VSAT), Satellite News Gathering (SNG), Satellite Interactive Terminals (SIT) and Satellite User Terminals (SUT) Earth Stations operated in the frequency ranges between 4 GHz and 30 GHz in the Fixed Satellite Service (FSS)".

History

Document history		
V1.1.1	March 2005	Publication
V1.1.2	June 2006	Publication