EXHIBIT 1006

US 20110013119A1

(19) United States

(12) Patent Application Publication

Ha et al.

(10) Pub. No.: US 2011/0013119 A1

(43) Pub. Date: Jan. 20, 2011

(54) BACKLIGHT ASSEMBLY AND DISPLAY APPARATUS HAVING THE SAME

(76) Inventors: **Juhwa Ha**, Asan-si (KR); **Young-Ran Son**, Miryang-si (KR); **JoongHyun Kim**, Asan-si (KR); **Min-Young Song**, Seoul (KR); **Sang Hoon Lee**, Cheonan-si (KR)

Correspondence Address:
Innovation Counsel LLP
21771 Stevens Creek Blvd, Ste. 200A
Cupertino, CA 95014 (US)

(21) Appl. No.: **12/698,040**

(22) Filed: **Feb. 1, 2010**

(30) **Foreign Application Priority Data**

Jul. 16, 2009 (KR) 10-2009-0064994

Publication Classification

(51) **Int. Cl.**
G02F 1/13357 (2006.01)
G09F 13/04 (2006.01)

(52) **U.S. Cl.** **349/64**; 362/97.1

(57) **ABSTRACT**

A backlight assembly includes a light source generating light and a first optical member diffusing the light. The first optical member includes a first diffusion member provided on an exit surface of the first optical member, from which the light exits, to diffuse the light. The first diffusion member includes a plurality of edges each having a curved shape and extending between the exit surface and a vertex of the first diffusion member. Accordingly, the light exiting through the exit surface is effectively diffused by the edges of the first diffusion member.

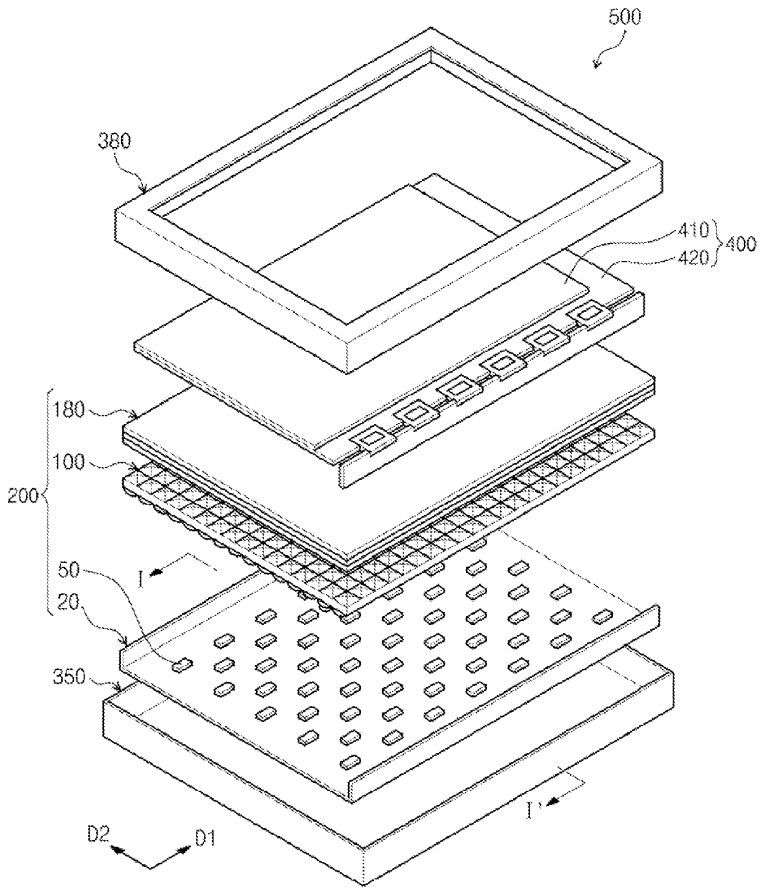

Fig. 1

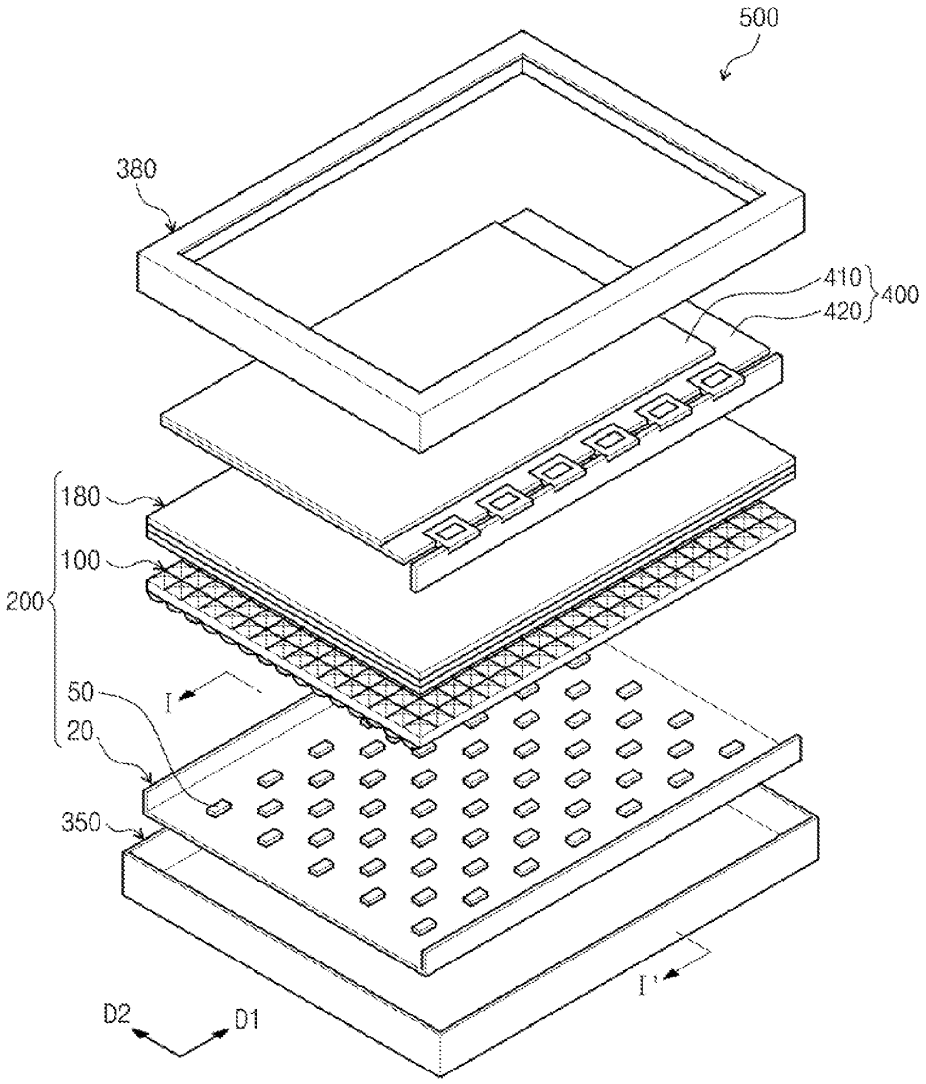

Fig. 2

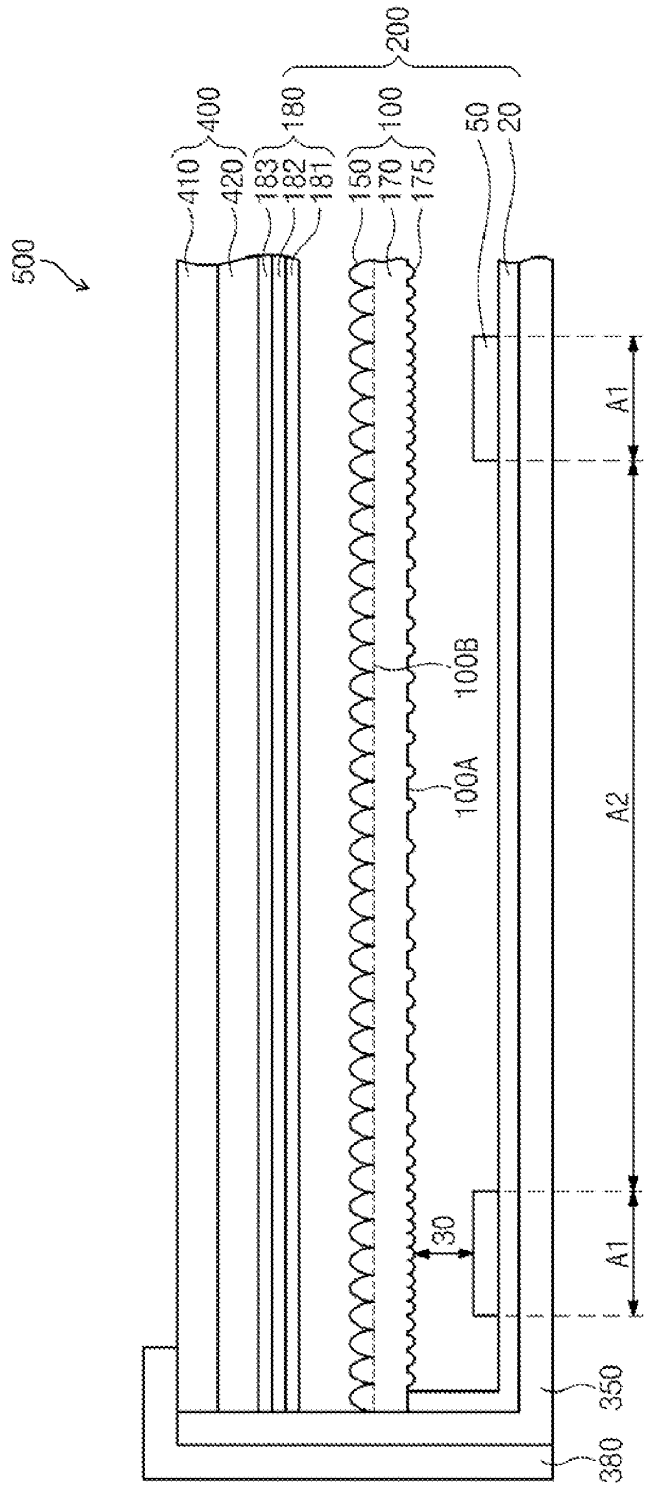
500
410
420
400
183
182
181
180
150
170
175
100
200
50
20
100B
100A
30
A1
A2
A1
350
380

Fig. 3

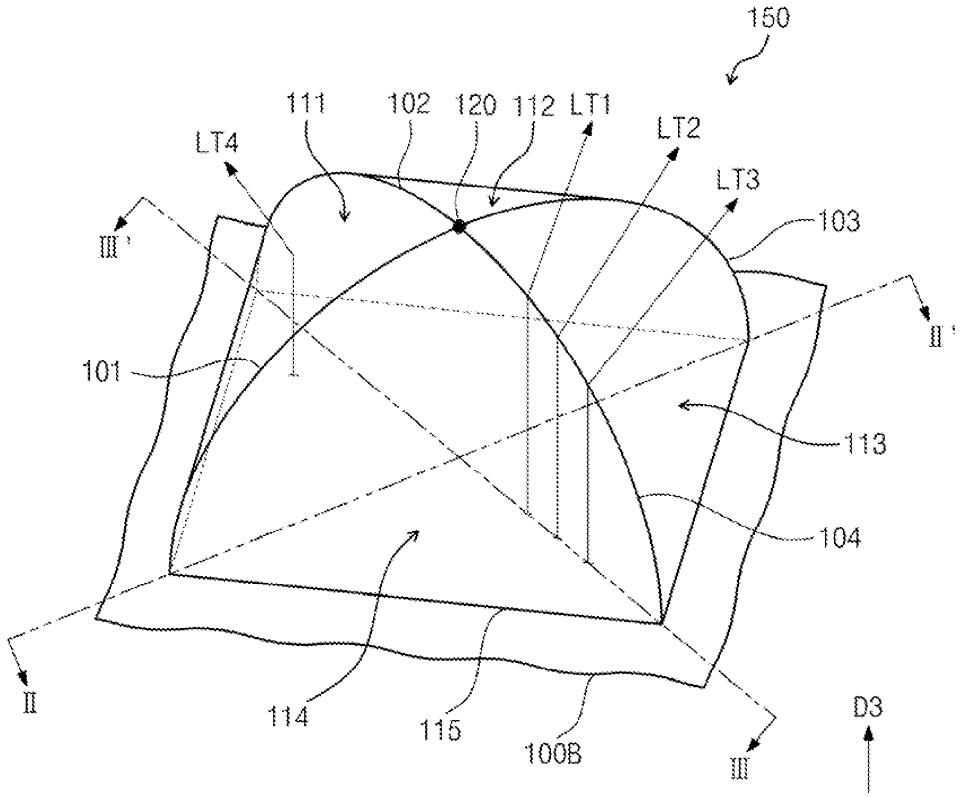
150
111
102
120
112
LT1
LT2
LT3
LT4
103
III'
II'
101
113
104
II
114
115
100B
III
D3

Fig. 4

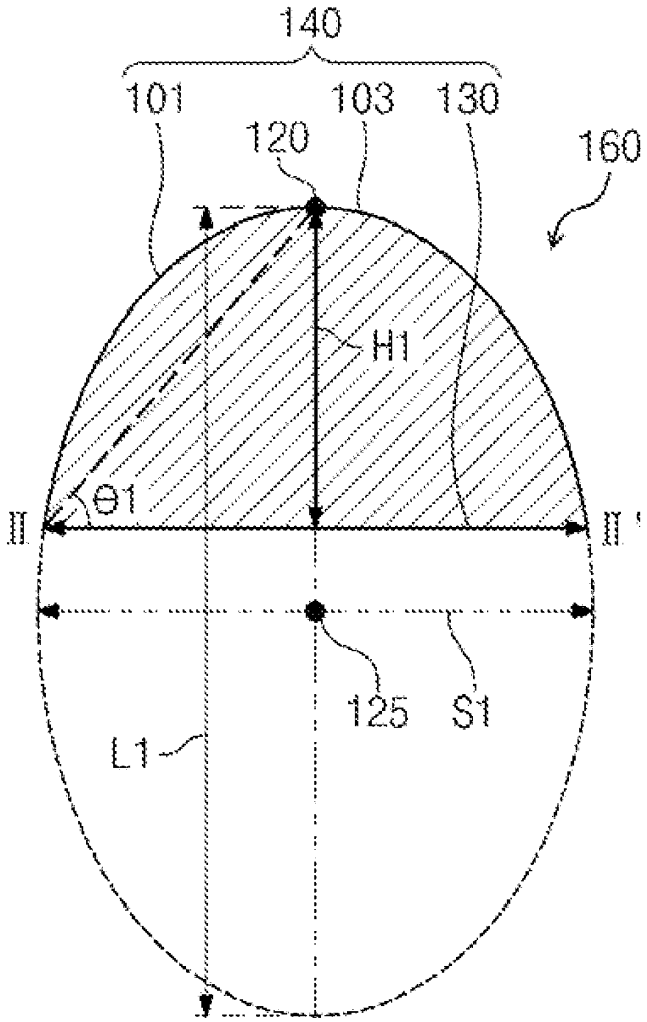

Fig. 5

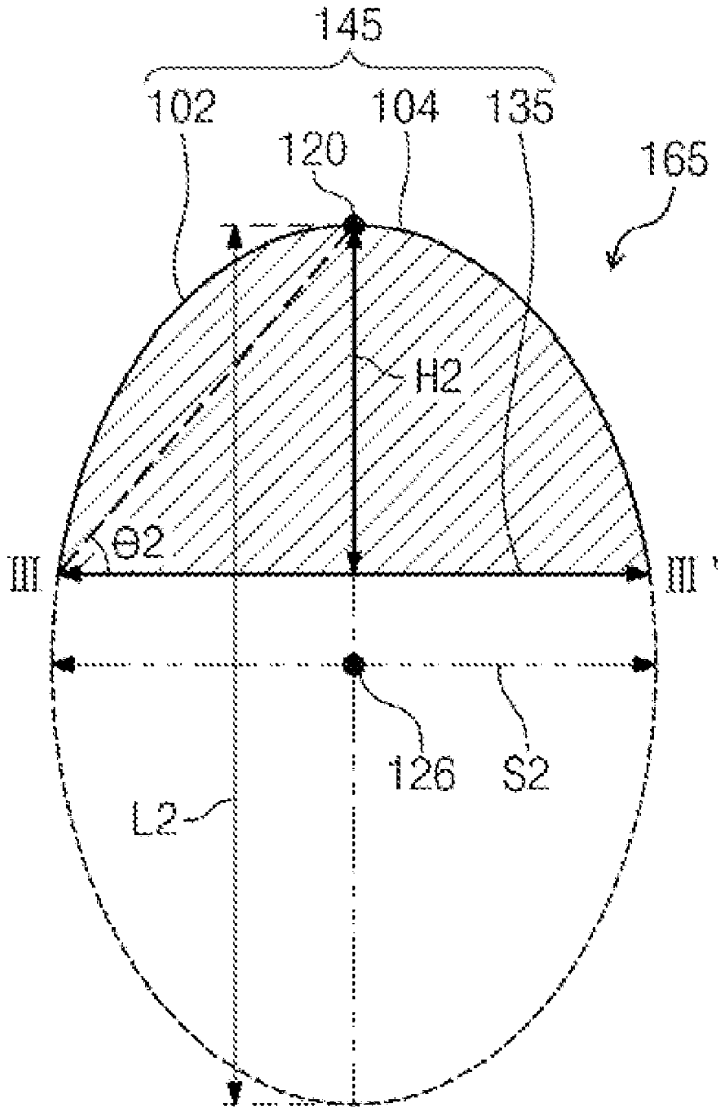

Fig. 6

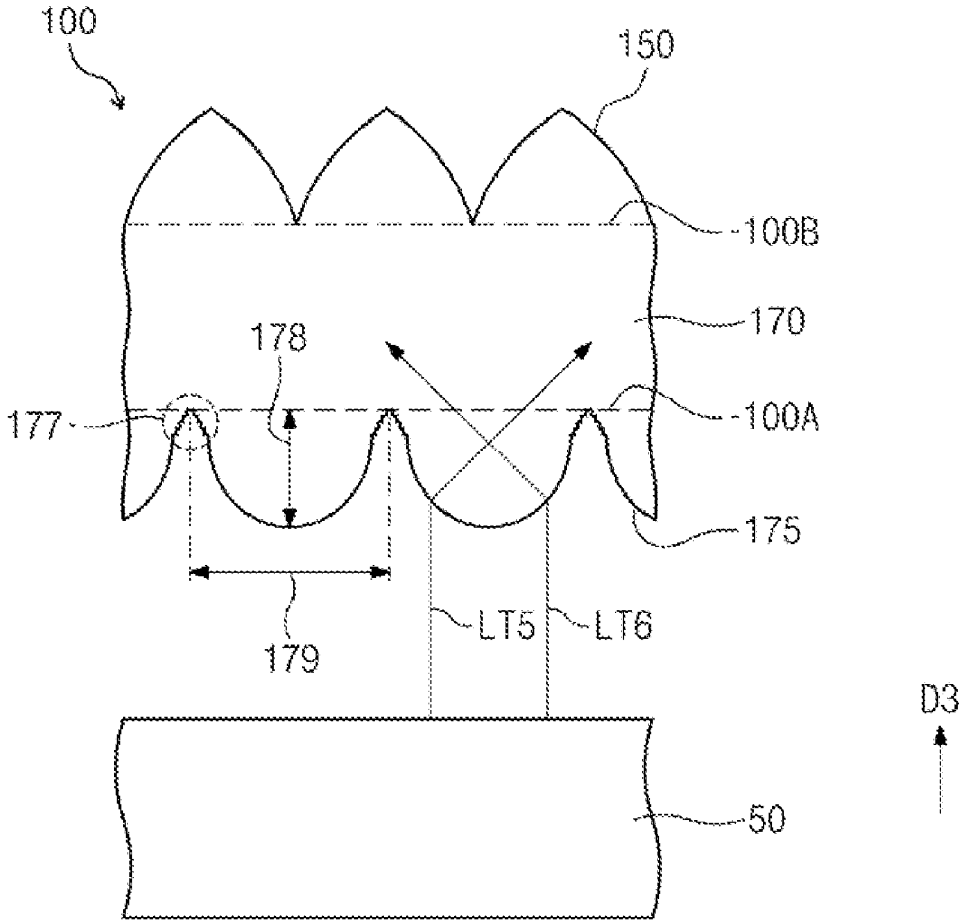

Fig. 7A

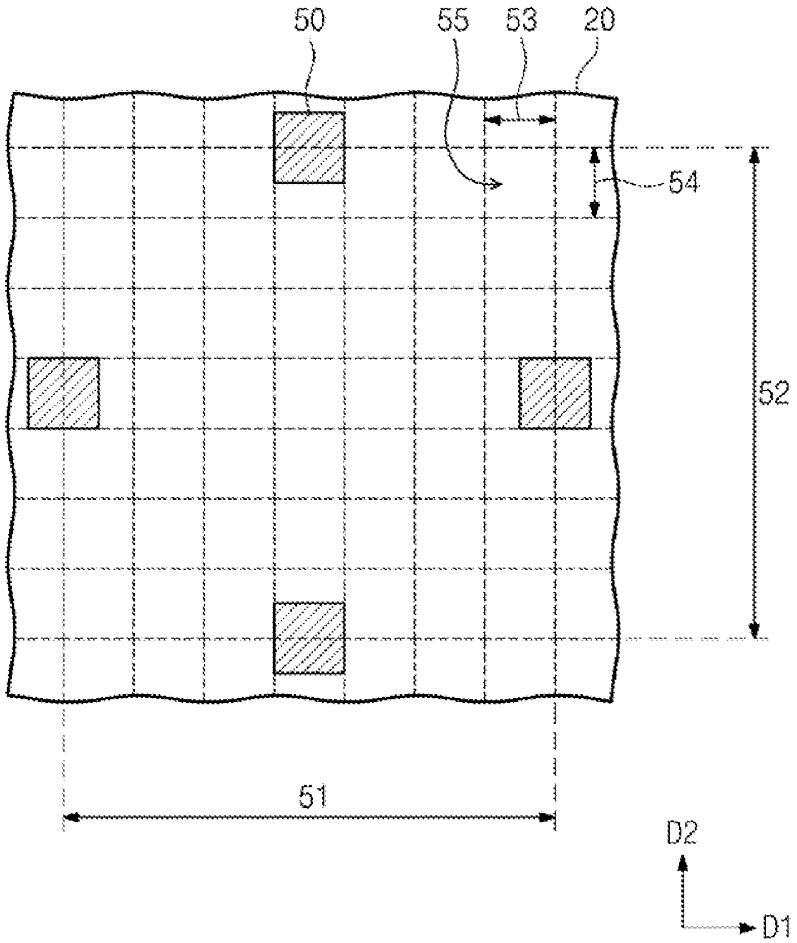

Fig. 7B

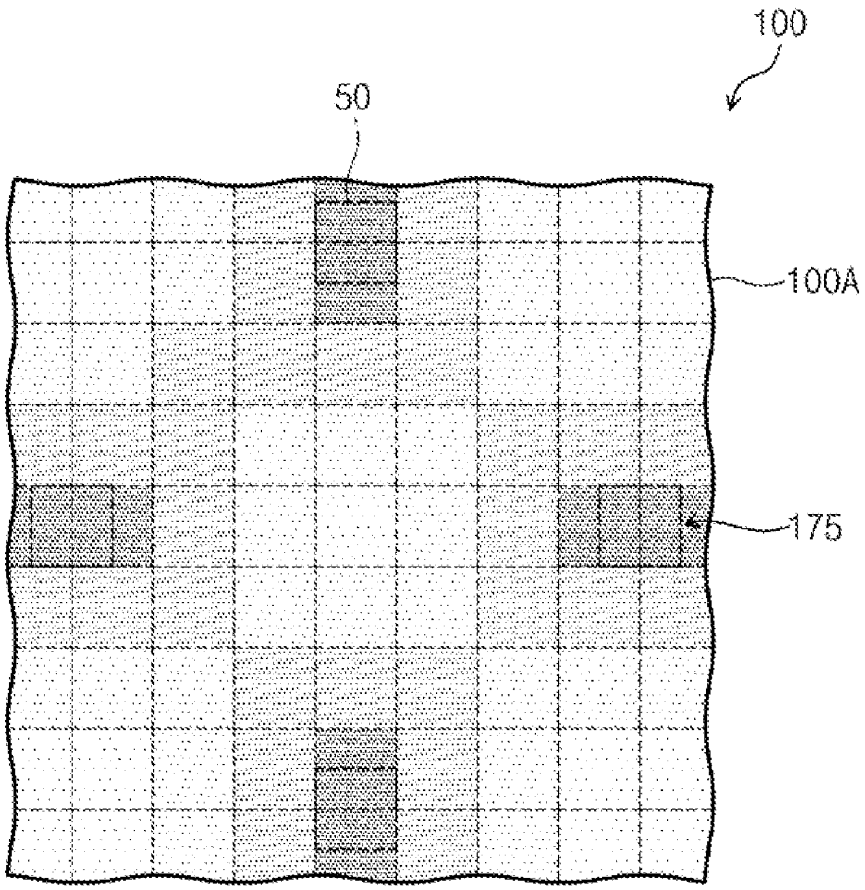

Fig. 8

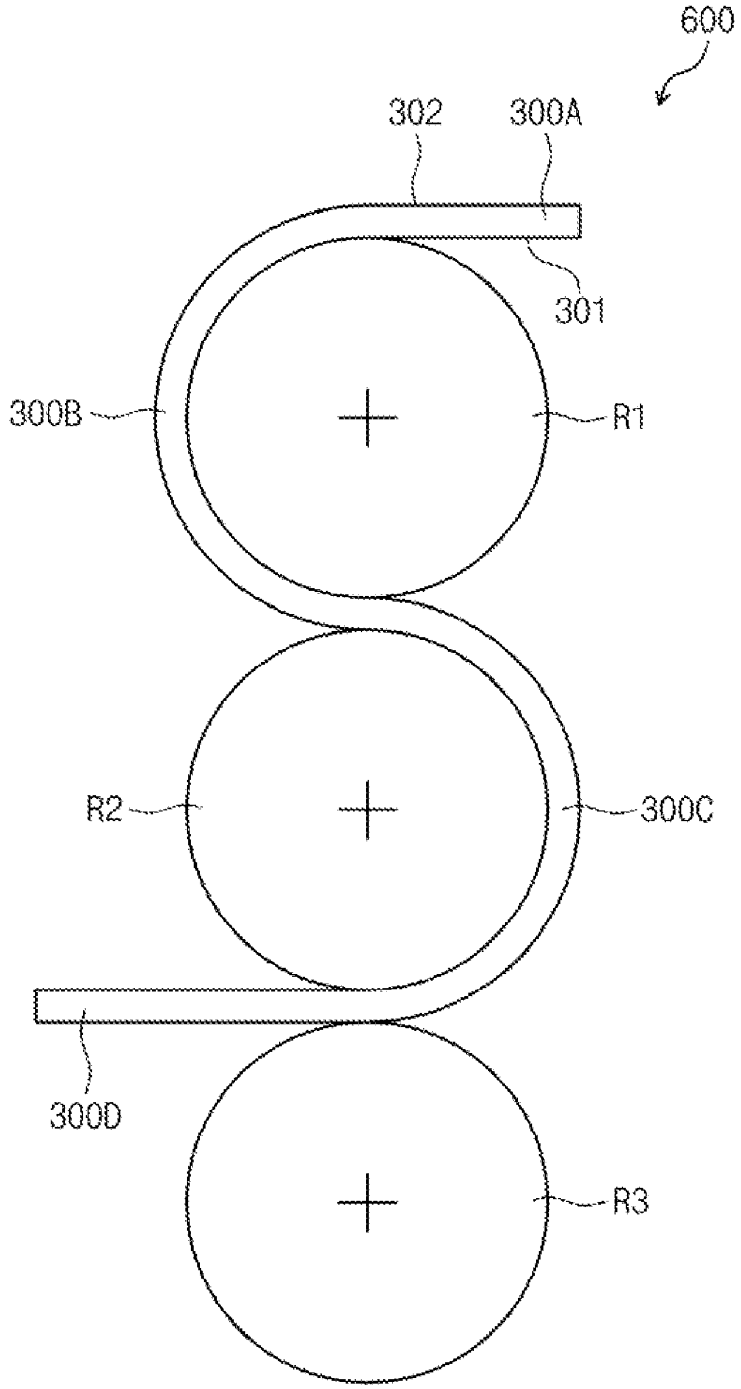

Fig. 9

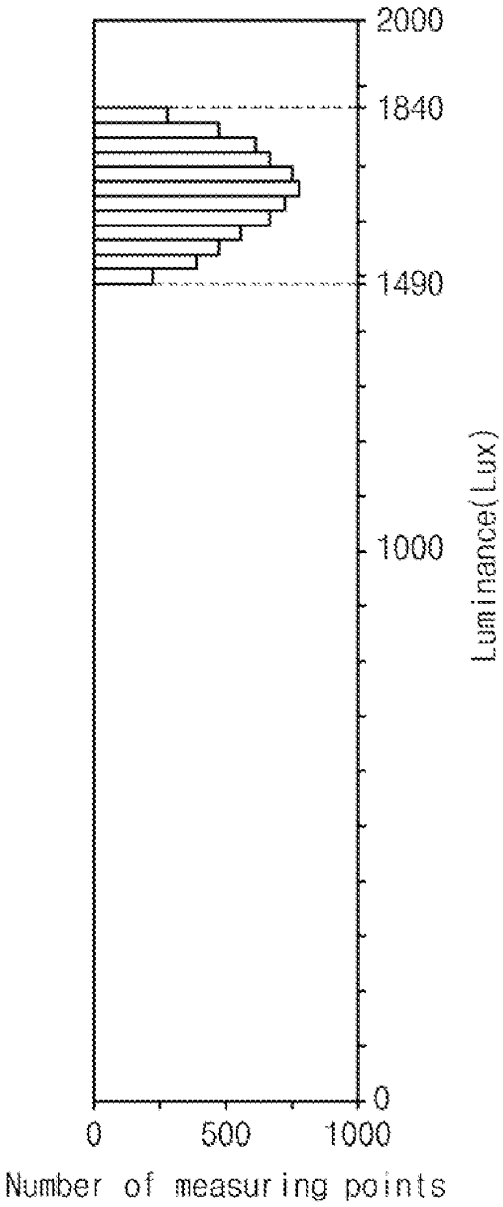
2000
1840
1490
1000
0
Luminance(Lux)
0
500
1000
Number of measuring points

BACKLIGHT ASSEMBLY AND DISPLAY APPARATUS HAVING THE SAME

CROSS-REFERENCE TO RELATED APPLICATION

[0001] This application relies for priority upon Korean Patent Application No. 2009-64994 filed on Jul. 16, 2009, the contents of which are herein incorporated by reference in their entirety.

BACKGROUND

[0002] 1. Field of the Invention

[0003] The present invention relates to a backlight assembly and a display apparatus having the same. More particularly, the present invention relates to a backlight assembly capable of providing substantially uniform light, and a display apparatus having the backlight assembly.

[0004] 2. Description of the Related Art

[0005] In general, a display apparatus includes a backlight assembly that generates light and a display panel that displays an image by using the light from the backlight assembly. Accordingly, a backlight assembly capable of uniformly providing light to the entire display panel improves the display quality of the display apparatus.

[0006] Recently, light emitting diodes have become widely used as the light source in the backlight assembly of display apparatuses, instead of cold cathode fluorescent lamps. The cold cathode fluorescent lamp serves as a line light source, and, in contrast, the light emitting diode serves as a point light source. Because conventional optical sheets, such as diffuser panels, were developed based on the optical properties of the line light source provided by cold cathode fluorescent lamps, the luminance of the light supplied to a display panel from a backlight assembly that employs the point light source provided by light emitting diodes can become irregular when the conventional optical sheet, such as a diffuser panel, is used.

SUMMARY

[0007] In one aspect the invention provides a backlight assembly capable of providing substantially uniform light.

[0008] Another aspect of the invention also provides a display apparatus having the backlight assembly.

[0009] According to another aspect, a backlight assembly includes a light source that generates a light and a first optical member. The first optical member includes an incident surface to which the light is incident, an exit surface facing the incident surface, from which the light exits, and a first diffusion member disposed on the exit surface to diffuse the light. The first diffusion member includes a plurality of inclined surfaces that meet at a vertex, and the edges of the inclined surfaces extend between the exit surface and the vertex spaced apart form the exit surface and have curved shape.

[0010] According to another aspect, a display apparatus includes a backlight assembly that includes a light source that generates a light and a first optical member that diffuses the light, and a display panel receiving the light from the backlight assembly to display an image.

[0011] The first optical member includes an incident surface to which the light is incident, an exit surface facing the incident surface, from which the light exits, and a first diffusion member disposed on the exit surface to diffuse the light.

[0012] The first diffusion member includes a plurality of inclined surfaces that meet at a vertex and a plurality of edges of the inclined surfaces. The edges of the inclined surfaces extend between the exit surface and the vertex spaced apart from the exit surface and have a curved shape.

[0013] The optical member may diffuse the light from the backlight assembly by using the diffusion members provided on the incident and exit surfaces thereof in various shapes. In addition, when the backlight assembly includes a plurality of point light sources, the optical member may effectively diffuse the light emitted from the point light sources. Thus, the distance between the optical member and the light sources in the backlight assembly may be reduced, thereby reducing a volume of the backlight assembly.

[0014] In addition, the backlight assembly provides the light to the entire display apparatus uniformly, to thereby improve the image display quality of the display apparatus.

BRIEF DESCRIPTION OF THE DRAWINGS

[0015] The above and other advantages of the present invention will become readily apparent by reference to the following detailed description when considered in conjunction with the accompanying drawings wherein:

[0016] FIG. **1** is an exploded perspective view showing a display apparatus according to an exemplary embodiment;

[0017] FIG. **2** is a sectional view taken along a line I-I' of FIG. **1**;

[0018] FIG. **3** is a perspective view showing a first diffusion member of FIG. **2**;

[0019] FIG. **4** is a sectional view taken along a line II-II' of FIG. **3**;

[0020] FIG. **5** is a sectional view taken along a line III-III' of FIG. **3**;

[0021] FIG. **6** is a partially enlarged view showing a first optical member of FIG. **2**;

[0022] FIG. **7**A is a partially enlarged plan view showing a reflection plate provided with light sources;

[0023] FIG. **7**B is a partially enlarged plan view showing a first optical member;

[0024] FIG. **8** is a view illustrating a method of fabricating a first optical member of FIG. **2**; and

[0025] FIG. **9** is a graph showing luminance of a display apparatus of FIG. **1**.

DESCRIPTION OF THE EMBODIMENTS

[0026] It will be understood that when an element or layer is referred to as being "on," "connected to" or "coupled to" another element or layer, it can be directly on, connected or coupled to another element or layer or intervening elements or layers may be present. In contrast, when an element is referred to as being "directly on," "directly connected to" or "directly coupled to" another element or layer, there are no intervening elements or layers present. Like numbers refer to like elements throughout. As used herein, the term "and/or" includes any and all combinations of one or more of the associated listed items.

[0027] It will be understood that, although the terms first, second, etc. may be used herein to describe various elements, components, regions, layers and/or sections, these elements, components, regions, layers and/or sections should not be limited by these terms. These terms are only used to distinguish one element, component, region, layer or section from another region, layer or section. Thus, a first element, component, region, layer or section discussed below could be

termed a second element, component, region, layer or section without departing from the teachings herein.

[0028] Spatially relative terms, such as "beneath," "below," "lower," "above," "upper" and the like, may be used herein for ease of description to describe one element or feature's relationship to another element(s) or feature(s) as illustrated in the figures. It will be understood that the spatially relative terms are intended to encompass different orientations of the device in use or operation in addition to the orientation depicted in the figures. For example, if the device in the figures is turned over, elements described as "below" or "beneath" other elements or features would then be oriented "above" the other elements or features. Thus, the exemplary term "below" can encompass both an orientation of above and below, depending on the orientation. The device may be otherwise oriented (rotated 90 degrees or at other orientations) and the spatially relative descriptors used herein interpreted accordingly.

[0029] The terminology used herein is for the purpose of describing particular embodiments only and is not intended to be limiting of the invention. As used herein, the singular forms, "a," "an" and "the" are intended to include the plural forms as well, unless the context clearly indicates otherwise. It will be further understood that the terms "includes" and/or "including," when used in this specification, specify the presence of stated features, integers, steps, operations, elements, and/or components, but do not preclude the presence or addition of one or more other features, integers, steps, operations, elements, components, and/or groups thereof.

[0030] Unless otherwise defined, all terms (including technical and scientific terms) used herein have the same meaning as commonly understood by one of ordinary skill in the art to which this invention belongs. It will be further understood that terms, such as those defined in commonly used dictionaries, should be interpreted as having a meaning that is consistent with their meaning in the context of the relevant art and will not be interpreted in an idealized or overly formal sense unless expressly so defined herein.

[0031] Hereinafter, the present invention will be explained in detail with reference to the accompanying drawings.

[0032] FIG. **1** is an exploded perspective view showing a display apparatus according to an exemplary embodiment, and FIG. **2** is a sectional view taken along a line I-I' of FIG. **1**.

[0033] Referring to FIGS. **1** and **2**, a display apparatus **500** includes a backlight assembly **200** that generates light, and a display panel **400** that receives the light from the backlight assembly **200** to display an image. The display apparatus **500** also includes a top chassis **380** and a bottom chassis **350** that is coupled with the top chassis **380** to receive the backlight assembly **200** and the display panel **400** therein.

[0034] The backlight assembly **200** includes a reflection plate **20**, a plurality of light sources **50** arranged on the reflection plate **20**, a first optical member **100**, and a second optical member **180**.

[0035] Each of the light sources **50** has an approximately point-shaped light source. The light sources **50** are arranged in a first direction D**1** and a second direction D**2** that is substantially perpendicular to the first direction D**1**, and are spaced apart from each other. In the present exemplary embodiment, the light sources **50** are spaced apart from each other by a distance of about 25 millimeters in the first direction D**1** and by a distance of about 28 millimeters in the second direction D**2**.

[0036] In addition, in the present exemplary embodiment, each of the light sources **50** may be a light emitting diode, but it should not be limited thereto or thereby. Each of the light sources **50** may be replaced with another point light source such as an organic light emitting diode.

[0037] The reflection plate **20** includes a material that reflects light, such as, for example, polyethylene terephthalate, aluminum, etc., and is disposed on a bottom of the bottom chassis **350**. The reflection plate **20** reflects the light provided from the light sources **50** to enhance the amount of the light used in the display panel **400** to display the image.

[0038] The first optical member **100** is disposed above the light sources **50** to diffuse the light emitted from the light sources **50**. The first optical member **100** includes a body **170**, first diffusion members **150** provided on an exit surface **100**B of the body **170**, and second diffusion members **175** provided on an incident surface **100**A of the body. The incident surface **100**A may be defined as a surface to which the light emitted from the light sources **50** is incident, and the exit surface **100**B may be defined as a surface from which the light incident to the body **170** exits. In the present exemplary embodiment, the first diffusion members **150** each have the same structure, thus one of the first diffusion members **150** will be described as a representative example of those members, and the same reference numerals are assigned to those components. In addition, in the present exemplary embodiment, the second diffusion members **175** all have the same structure, thus one of the second diffusion members **175** will be described as a representative example of those members, and the same reference numerals are assigned to those components.

[0039] Each of the first diffusion members **150** has a polyhedron shape of which a bottom surface makes contact with the exit surface **100**B and inclined surfaces are connected with the bottom surface. The inclined surfaces are connected with one vertex spaced apart from the bottom surface, and the edges where two adjacent inclined surfaces meet each other have a curved shape. The first diffusion member **150** diffuses the light exiting to the exterior after sequentially passing through the body **170** and the exit surface **100**B. The first diffusion member **150** will be described in more detail below with reference to FIGS. **3** to **5**.

[0040] The second diffusion members **175** are provided on the incident surface **100**A. Each of the second diffusion members **175** has an embossed shape that protrudes from the incident surface **100**A. Accordingly, the light emitted from the light sources **50** and passing through the incident surface **100**A may be diffused by a curved surface of the second diffusion member **175**.

[0041] The number of the second diffusion members **175**, and the spacing between second diffusion members **175**, provided on the incident surface **100**A depends on the positions of the light sources **50**. For example, in FIG. **2**, the area corresponding to the positions of the light sources **50** is defined as a first area A**1**, and an area corresponding to the area between two light sources adjacent to each other is defined as a second area A**2**. The number of the second diffusion members **175** positioned in the second area A**2** increases as the second diffusion members **175** are spaced apart from a center of the second area A**2**. In other words, the second diffusion members **175** are spaced farther apart in the second area than in the first area, and the space between each second diffusion member is greatest in the center of the second area and decrease toward the first area.

[0042] In general, increasing the distance between light sources and optical members that diffuse the light emitted from the light sources increases the amount of the light that travels in different directions, and thus the light diffusion effect created by the optical members is increased, which improves display quality. Increasing the distance between the light sources and optical members that diffuse light emitted from the light sources may, however, also increase the thickness of the backlight assembly. However, in the above-described display apparatus **500**, because the first optical member **100** increases the diffusion effect of the light, a distance between the first optical member **100** and each light source **50** may be equal to or smaller than 10 millimeters, and thus a thickness of the display apparatus **500** may be equal to or smaller than 20 millimeters.

[0043] The second optical member **180** is disposed on the first optical member **100**. The second optical member **180** may include a plurality of optical films. For instance, the second optical member **180** may include a reflective polarizer **181** that reflects or transmits the light from the first optical member **100** according to the vibration direction of the light, a prism sheet **182** that condenses the light from the reflective polarizer **181** to improve the front brightness of the light, and a diffusion film **183** that diffuses the light from the prism sheet **182**.

[0044] According to another exemplary embodiment, the second optical member **180** may further include additional optical films having different functions from the above-described optical films, or the same functions as the above-described optical films.

[0045] In the present exemplary embodiment, the display panel **400** may be a panel for a liquid crystal display. In a case in which the display panel **400** is the panel for the liquid crystal display, the display panel **400** includes a first substrate **420** employing thin film transistors (not shown) and a second substrate **410** facing the first substrate **420**. The first substrate **420** includes a plurality of pixels (not shown) each having a corresponding thin film transistor of the thin film transistors and a pixel electrode (not shown) electrically connected to the corresponding thin film transistor.

[0046] The second substrate **410** includes color filters (not shown) positioned in one-to-one correspondence with the pixels. In addition, if the display panel **400** is the panel for the liquid crystal display, the second substrate **410** may include a common electrode (not shown) that forms an electric field with the pixel electrode.

[0047] According to another exemplary embodiment, the color filters may be formed on the first substrate **420** instead of the second substrate **410**, and also the common electrode may be formed on the first substrate **420**, not on the second substrate **410**. In the case in which the common electrode is formed on the first substrate **420**, the common electrode forms a horizontal electric field in cooperation with the pixel electrode and serves as an opposite electrode to control directors of liquid crystals.

[0048] The bottom chassis **350** includes a bottom and inclined surfaces that extend from the bottom to provide a receiving space. The reflection plate **20**, the light sources **50**, the first optical member **100**, and the second optical member **180** are received in the receiving space. In addition, the display panel **400** is disposed on the second optical member **180**, and the top chassis **380** is coupled with the bottom chassis **350** to cover the end of the display panel **400**.

[0049] FIG. **3** is a perspective view showing a first diffusion member **150** of FIG. **2**. In FIG. **3**, only one first diffusion member **150** has been shown as a representative example since the first diffusion members **150** have the same structure.

[0050] Referring to FIG. **3**, the first diffusion member **150** includes a bottom surface **115** making contact with the exit surface **100**B and first, second, third and fourth inclined surfaces **111**, **112**, **113**, and **114**, respectively, extending from the bottom surface **115** and connected at the vertex **120**.

[0051] The first inclined surface **111** includes a first edge **101** and a second edge **102**. The second inclined surface **112** includes a third edge **103** and co-owns the second edge **102** with the first inclined surface **111**. The third inclined surface **113** includes a fourth edge **104** and co-owns the third edge **103** with the second inclined surface **112**. The fourth inclined surface **114** co-owns the first edge **101** with the first inclined surface **111**, and the fourth inclined surface **114** co-owns the fourth edge **104** with the third inclined surface **113**.

[0052] In the first diffusion member **150** having the above-described structure, the light provided to the first diffusion member **150** after passing through the bottom surface **115** is refracted by the first to fourth inclined surfaces **111**, **112**, **113**, and **114** and the first to fourth edges **101**, **102**, **103**, and **104**, thereby changing the path of the light.

[0053] In detail, when first, second, and third lights LT**1**, LT**2**, and LT**3**, respectively, traveling toward a third direction D**3** are provided to the first diffusion member **150**, the first to third lights LT**1**, LT**2**, and LT**3** are refracted by the fourth edge **104** after passing through the bottom surface **115**, and each travels toward a direction that is different from the third direction D**3**.

[0054] Each of the first to fourth edges **101**, **102**, **103**, and **104** has a curved shape. Thus, the lights refracted by the first to fourth edges **101**, **102**, **103**, and **104** after passing through the exit surface **100**B may be dispersed in a variety of different directions. For instance, the first to third lights LT**1**, LT**2**, and LT**3** travel toward the third direction D**3** before being refracted by the fourth edge **104**, but the first to third lights LT**1**, LT**2**, and LT**3** each travel in different directions after being refracted by the fourth edge **104**. That is, due to the curved shape of the fourth edge **104**, the lights passing through the first diffusion member **150** are dispersed in a variety of different directions, thereby increasing the light diffusion effect.

[0055] Meanwhile, when a fourth light LT**4** traveling toward the third direction D**3** reaches the first inclined surface **111** after passing through the bottom surface **115**, the fourth light LT**4** is refracted by the first inclined surface **111** to travel toward a direction different from the third direction D**3** since the first inclined surface **111** is inclined toward the vertex while extending from the bottom surface **115**.

[0056] The light diffusion effect created by the first diffusion member **150** is shown in FIG. **9**. FIG. **9** is a graph showing luminance of a display apparatus of FIG. **1**. In FIG. **9**, the luminance (lux) has been obtained by measuring the light emitted from a display area having a size of 30 mm×30 mm.

[0057] Referring to FIG. **9**, an average value of the measured luminance is approximately 1660 lux, a minimum value of the measured luminance is approximately 1490 lux, and a maximum value of the measured luminance is approximately 1840 lux. In other words, the display apparatus **500** employing the first diffusion member **150** may display the image in a luminance difference of about 180 lux to about 350 lux.

[0058] Although not shown in FIG. **9**, if the first optical member **100** does not include the first diffusion members **150** and the second diffusion members **175**, the minimum value of the luminance of the display apparatus may be lowered below 1000 lux, so that the luminance difference may be varied over 700 lux. As the luminance difference of the image displayed on the display apparatus increases, a bright/dark line occurs on the display image due to the luminance difference, thereby causing deterioration in image display quality.

[0059] However, in the exemplary embodiments disclosed herein, the display apparatus **500** employing the first optical member **100** may reduce the luminance difference of the displayed image, to thereby minimize deterioration of the image display quality of the display apparatus.

[0060] FIG. **4** is a sectional view taken along a line II-II' of FIG. **3**.

[0061] Referring to FIG. **4**, a cross-section of the first optical member **150**, taken along the vertex **120**, the first edge **101**, and the third edge **103**, has a first segment **140**.

[0062] The first segment **140** is defined by the first edge **101**, the third edge **103** connected with the first edge **101** through the vertex **120**, and a first chord **130** connecting an end of the first edge **101** to an end of the third edge **103**.

[0063] In the present exemplary embodiment, the first chord **130** may have a length from about 30 micrometers to about 100 micrometers, and a first straight distance H**1** between the vertex **120** and the first chord **130** is from about 15 micrometers to about 50 micrometers.

[0064] In addition, a curve defined by the first and third edges **101** and **103** connected with each other through the vertex **120** corresponds to a portion of an elliptical arc of a first ellipse **160** defined by a first major axis L**1** and a first minor axis S**1** crossing the first major axis L**1** at a first center portion **125** of the first ellipse **160**. That is, a curvature of the curve defined by the first and third edges **101** and **103** may be defined by a curvature of the elliptical arc of the first ellipse **160**.

[0065] In the first ellipse **160** according to the present exemplary embodiment, a ratio of a length of the first minor axis S**1** to a length of the first major axis L**1** is from 1:1 to 1:3. If the ratio of the length of the first minor axis S**1** to the length of the first major axis L**1** is 1:1, the first ellipse **160** may have a substantially circular shape.

[0066] In addition, an angle between a straight line connecting the end of the first edge **101** to the vertex **120** and the first chord **130** is referred to as a first angle θ**1**. The first angle θ**1** is from about 20 degree to about 40 degree.

[0067] FIG. **5** is a sectional view taken along a line III-III' of FIG. **3**.

[0068] Referring to FIG. **5**, a cross-section of the first optical member **150**, taken along the first edge **101** and the third edge **103**, has a second segment **145**.

[0069] The second segment **145** is defined by the second edge **102**, the fourth edge **104** connected with the second edge **102** through the vertex **120**, and a second chord **135** connecting an end of the second edge **102** to an end of the fourth edge **104**.

[0070] In the present exemplary embodiment, the second chord **135** may have a length from about 30 micrometers to about 100 micrometers, and a second straight distance H**2** between the vertex **120** and the second chord **135** is from about 15 micrometers to about 50 micrometers.

[0071] In addition, a curve defined by the second and fourth edges **102** and **104** connected with each other through the vertex **120** corresponds to a portion of an elliptical arc of a second ellipse **165** defined by a second major axis L**2** and a second minor axis S**2** crossing the second major axis L**2** at a second center portion **126** of the second ellipse **165**. That is, a curvature of the curve defined by the second and fourth edges **102** and **104** may be defined by a curvature of the elliptical arc of the second ellipse **165**.

[0072] In the second ellipse **165** according to the present exemplary embodiment, a ratio of a length of the second minor axis S**2** to a length of the second major axis L**2** is from 1:1 to 1:3. If the ratio of the length of the second minor axis S**2** to the length of the second major axis L**2** is 1:1, the second ellipse **165** may have a substantially circular shape.

[0073] In addition, an angle between a straight line connecting the end of the second edge **102** to the vertex **120** and the second chord **135** is referred to as a second angle θ**2**. The second angle θ**2** is from about 20 degree to about 40 degree.

[0074] Referring again to FIG. **3**, the cross-section of the first diffusion member **150**, which is taken along the line II-II', is the same as the first segment **140**, and the elliptical arc of the first segment **140** is the same as the portion of the elliptical arc of the first ellipse **160**. In addition, the cross-section of the first diffusion member **150**, which is taken along the line III-III', is the same as the second segment **145**, and the elliptical arc of the second segment **145** is the same as the portion of the elliptical arc of the second ellipse **160**.

[0075] In the present exemplary embodiment, because the first segment **140** is substantially same as the second segment **145**, the first ellipse **160** is substantially same as the second ellipse **165**. However, it should not be limited thereto or thereby, and thus the first segment **140** may be designed to have a shape that is different from that of the second segment **145**.

[0076] FIG. **6** is a partially enlarged view showing a first optical member of FIG. **2**.

[0077] Referring to FIG. **6**, the second diffusion member **175** is provided on the incident surface **100**A of the first optical member **100**. The second diffusion member **175** has the embossed shape protruding from the incident surface **100**A.

[0078] In the present exemplary embodiment, the second diffusion member **175** has a surface making contact with the incident surface **100**A, and the surface of the second diffusion member **175** has a width **179** of about 30 micrometers to about 100 micrometers. In addition, the second diffusion member **175** protruding from the incident surface **100**A has a height **178** of about 10 micrometers to about 40 micrometers.

[0079] The light emitted from the light sources **50** and traveling toward the first optical member **100** is refracted at the surface of the second diffusion member **175**, so that the direction the light travels is varied. For instance, a fifth light LT**5** and a sixth light LT**6**, which are emitted from the light sources **50** to travel toward the third direction D**3**, are refracted by the curved surface of the second diffusion member **175** to travel toward directions different from the third direction D**3**.

[0080] The light emitted from the light sources **50** that travels toward the third direction D**3** is vertically emitted from the light sources **50**. Accordingly, the second diffusion member **175** disperses the traveling path of the light substantially vertically emitted from the light sources **50**, and as a result, the light diffusion effect of the light emitted from the light sources **50** is increased by the second diffusion member **175**.

[0081] Meanwhile, as shown in FIG. **6**, a fine concavo-convex pattern **177** may be formed in a valley positioned between two second diffusion members that are adjacent to each other. The fine concavo-convex pattern **177** scatters the lights traveling toward the valley in a variety of directions, thereby preventing a moiré phenomenon caused by optical interference.

[0082] FIG. **7**A is a partially enlarged plan view showing a reflection plate provided with light sources, and FIG. **7**B is a partially enlarged plan view showing a first optical member.

[0083] Referring to FIGS. **7**A and **7**B, the light sources **50** are arranged on the reflection plate **20**. The light sources **50** are arranged in the first direction D**1** and the second direction D**2**, which is substantially perpendicular to the first direction D**1**, and are spaced apart from each other. In particular, the light sources **50** are spaced apart from each other by a first interval **51** in the first direction D**1** and spaced apart from each other by a second interval **52** in the second direction D**2**.

[0084] As described with reference to FIG. **6**, the second diffusion member **175** protrudes from the incident surface **100**A to have an embossed shape, and the number of the second diffusion members **175** provided on the incident surface **100**A depends on the positions of the light sources **50**.

[0085] Hereinafter, the number of the second diffusion members **175** will be described as a pattern density.

[0086] In the present exemplary embodiment, for example, the first interval **51** and the second interval **52** may be approximately 25 millimeters and 28 millimeters, respectively. When each of the first and second intervals **51** and **52** are divided into seven equal parts, a rectangular area defined by the first and second intervals **51** and **52** is divided into forty-nine lattice areas **55**. Thus, each lattice area **55** has a long side of about 4 millimeters and a short side of about 3.57 millimeters.

[0087] When the pattern density is defined by the number of the second diffusion members **175** provided in each lattice area **55**, the pattern density becomes a maximum at the lattice areas that overlap the light sources **50**, and becomes a minimum at the lattice areas that overlap the area between two light sources. For instance, assuming that the pattern density at the lattice areas overlapped with the light sources **50** is 1, the pattern density at the lattice areas overlapped between two light sources adjacent to each other is about 0.2. In addition, the pattern density gradually increases from 0.2 to 1 from the center of the lattice areas that overlap the area between two light sources to the lattice areas that overlap with the light sources. In other words, the second diffusion members **175** are spaced farther apart in the lattice areas that overlap a center of the area between two light sources, and become closer together as the lattice areas become nearer to a center of the lattice areas that overlap with the light sources **50**.

[0088] FIG. **8** is a view illustrating a method of fabricating a first optical member of FIG. **2**.

[0089] Referring to FIG. **8**, an extrusion molder **600** includes a first roller R**1**, a second roller R**2**, and a third roller R**3**, which are arranged vertically one above another.

[0090] In order to manufacture the first optical member **100** using the extrusion molder **600**, a polymer resin **300**A in a molten state is provided to the first roller R**1**. The polymer resin **300**A includes a first surface **301** and a second surface **302** opposite to the first surface **301**.

[0091] When the polymer resin **300**A is provided to the first roller R**1**, the first and second rollers **301** and **302** are rotated in mutually opposite directions to pressurize the polymer resin **300**A, so that the first diffusion members **150** (shown in FIG. **2**) are formed on the first surface **301** by a pattern (not shown) formed on a surface of the first roller R**1**. As a result, a first preliminary plate **300**B is formed, having the first diffusion members formed on the first surface **301**. The pattern formed on the surface of the first roller R**1** may have a recessed shape to oppositely correspond to the shape of the first diffusion members.

[0092] Then, the second diffusion members **175** (shown in FIG. **2**) are formed on the second surface **302** of the polymer resin **300**A by a pattern (not shown) formed on a surface of the second roller R**2**. As a result, a second preliminary plate **300**C is formed, having the second diffusion members formed on the second surface **302**. The pattern formed on the surface of the second roller R**2** may have a recessed shape to oppositely correspond to the shape of the second diffusion member.

[0093] Next, the second and third rollers R**2** and R**3** are rotated in mutually opposite direction to pressurize the second preliminary plate **300**C. Thus, the fine concavo-convex pattern **177** (shown in FIG. **6**) is formed on the second surface **302** by a plurality of beads (not shown) formed on a surface of the third roller R**3**. As a result, a third preliminary plate **300**D is formed, having the fine concavo-convex pattern formed after the second diffusion members are formed.

[0094] Then, the third preliminary plate **300**D is cured and is cut into the desired size, thereby completely manufacturing the first optical member **100**.

[0095] Although exemplary embodiments have been described, it is understood that the present invention should not be limited to these exemplary embodiments but various changes and modifications can be made by one ordinary skilled in the art within the spirit and scope of the present invention as hereinafter claimed.

What is claimed is:

1. A backlight assembly comprising:

a light source that generates light; and

a first optical member that comprises an incident surface to which the light is incident, an exit surface facing the incident surface, from which the light exits, and a first diffusion member disposed on the exit surface to diffuse the light,

wherein the first diffusion member comprises a plurality of inclined surfaces that meet at a vertex and a plurality of edges of the inclined surfaces, wherein the edges of the inclined surfaces extend between the exit surface and the vertex spaced apart from the exit surface and have a curved shape.

2. The backlight assembly of claim **1**, wherein the first diffusion member has a plurality of bottom surface that is in contact with the exit surface, and each side of the bottom surface meets lower end of each of the inclined surfaces.

3. The backlight assembly of claim **2**, wherein the edges comprise a first edge, a second edge, a third edge, and a fourth edge, and the inclined surfaces comprise:

a first inclined surface comprising the first and second edges;

a second inclined surface comprising the third edge and co-owning the second edge with the first surface;

a third inclined surface comprising the fourth edge and co-owning the third edge with the second surface; and

a fourth inclined surface co-owning the first edge with the first surface and co-owning the fourth edge with the third surface, and

the first to fourth edges have the curved shape.

4. The backlight assembly of claim **3**, wherein the first diffusion member comprising the first and third edges has a cross-section in a first segment that is defined by an elliptical arc of a first ellipse, which includes the first and third edges, and a chord connecting both ends of the elliptical arc of the first ellipse, and the first diffusion member comprising the second and fourth edges has a cross-section in a second segment that is defined by an elliptical arc of a second ellipse, which includes the second and fourth edges, and a chord connecting both ends of the elliptical arc of the second ellipse.

5. The backlight assembly of claim **4**, wherein a ratio of a minor axis of the first ellipse to a major axis of the ellipse is 1:1 to 1:3, and a ratio of a minor axis of the second ellipse to a major axis of the ellipse is 1:1 to 1:3.

6. The backlight assembly of claim **4**, wherein the first segment has a same shape as the second segment.

7. The backlight assembly of claim **4**, wherein the chord of each of the first and second segments has a length of about 30 micrometers to about 100 micrometers, a straight distance between the vertex and the chord of the first segment is equal to or smaller than about 15 micrometers to about 50 micrometers, and a straight distance between the vertex and the chord of the second segment is equal to or smaller than about 15 micrometers to about 50 micrometers.

8. The backlight assembly of claim **1**, wherein the light source comprises a plurality of point light sources spaced apart from each other.

9. The backlight assembly claim **8**, wherein each of the point light sources is a light emitting diode.

10. The backlight assembly of claim **8**, wherein two point light sources adjacent to each other and arranged in a first direction are spaced apart from each other by a distance of about 25 millimeters, and two point light sources adjacent to each other and arranged in a second direction substantially perpendicular to the first direction are spaced apart from each other by a distance of about 28 millimeters, and a distance between the first optical member and each of the point light sources is equal to or smaller than 10 millimeters.

11. The backlight assembly of claim **1**, further comprising a second diffusion member that has a shape that protrudes from the incident surface to diffuse the light.

12. The backlight assembly of claim **11**, wherein the incident surface comprises a first area corresponding to an area on the incident surface covered by each point light source and a second area corresponding an area on the incident surface between two point light sources adjacent to each other, and the second diffusion members are spaced farther apart in the second area than in the first area, and a space between each second diffusion member is greatest in a center of the second area and decreases toward the first area.

13. The backlight assembly of claim **1**, further comprising a second optical member facing the light source while interposing the first optical member between the light source and the second optical member,

wherein the second optical member comprises:

a reflective polarizer that reflects or transmits the light from the light source according to a vibration direction of the light;

a prism sheet that condenses the light from the reflective polarizer; and

a diffusion sheet that diffuses the light provided through the prism sheet.

14. The backlight assembly of claim **1**, wherein each of the inclined surfaces has a predetermined curvature.

15. A display apparatus comprising:

a backlight assembly comprising a light source that generates a light and a first optical member that diffuses the light; and

a display panel receiving the light from the backlight assembly to display an image,

wherein the first optical member comprises an incident surface to which the light is incident, an exit surface facing the incident surface, from which the light exits, and a first diffusion member disposed on the exit surface to diffuse the light,

wherein the first diffusion member comprises a plurality of inclined surfaces that meet a vertex and a plurality of edges of the inclined surfaces, wherein the edges of the inclined surfaces extend between the exit surface and the vertex spaced apart from the exit surface and have a curved shape.

16. The display apparatus of claim **15**, wherein the first diffusion member has a plurality of bottom surface that is in contact with the exit surface, and each side of the bottom surface meets lower end of each of the inclined surfaces.

17. The display apparatus of claim **16**, wherein the edges comprise a first edge, a second edge, a third edge, and a fourth edge, and the inclined surfaces comprise:

a first inclined surface comprising the first and second edges;

a second inclined surface comprising the third edge and co-owning the second edge with the first surface;

a third inclined surface comprising the fourth edge and co-owning the third edge with the second surface; and

a fourth inclined surface co-owning the first edge with the first surface and co-owning the fourth edge with the third surface, and

the first to fourth edges have the curved shape.

18. The display apparatus of claim **17**, wherein the first diffusion member comprising the first and third edges has a cross-section in a first segment that is defined by an elliptical arc of a first ellipse, which includes the first and third edges, and a chord connecting both ends of the elliptical arc of the first ellipse, the first diffusion member comprising the second and fourth edges has a cross-section in a second segment that is defined by an elliptical arc of a second ellipse, which includes the second and fourth edges, and a chord connecting both ends of the elliptical arc of the second ellipse, a ratio of a minor axis of the first ellipse to a major axis of the ellipse is 1:1 to 1:3, and a ratio of a minor axis of the second ellipse to a major axis of the ellipse is 1:1 to 1:3.

19. The display apparatus of claim **15**, wherein the light source comprises a plurality of point light sources spaced apart from each other.

20. The display apparatus of claim **19**, further comprising a second diffusion member that has a shape that protrudes from the incident surface to diffuse the light, wherein the incident surface comprises a first area corresponding to an area on the incident surface covered by each point light source and a second area corresponding to an area on the incident surface between two point light sources adjacent to each other, and the second diffusion members are spaced farther apart in the second area than in the first area and a space between each second diffusion member is greatest in a center of the second area and decreases toward the first area.

* * * * *