US007312993B2

(12) **United States Patent**
Bundza et al.

(10) **Patent No.: US 7,312,993 B2**
(45) **Date of Patent: Dec. 25, 2007**

(54) **ELECTRONICS EQUIPMENT CABINET**

(75) Inventors: **Nicholas Adam Bundza**, Ottawa (CA); **Stefano De Cecco**, Ottawa (CA); **Angelo Arlotta**, Ottawa (CA)

(73) Assignee: **Alcatel Lucent**, Paris (FR)

(*) Notice: Subject to any disclaimer, the term of this patent is extended or adjusted under 35 U.S.C. 154(b) by 108 days.

(21) Appl. No.: **11/313,748**

(22) Filed: **Dec. 22, 2005**

(65) **Prior Publication Data**

US 2007/0144704 A1 Jun. 28, 2007

(51) **Int. Cl.**
H05K 7/20 (2006.01)

(52) **U.S. Cl.** **361/696**; 361/695; 361/697; 165/104.33; 165/122; 454/184

(58) **Field of Classification Search** ..... None
See application file for complete search history.

(56) **References Cited**

U.S. PATENT DOCUMENTS

5,467,250 A * 11/1995 Howard et al. 361/696
6,164,369 A 12/2000 Stoller
6,225,554 B1 5/2001 Trehan et al.
6,652,373 B2 * 11/2003 Sharp et al. 454/184
6,742,583 B2 * 6/2004 Tikka 165/291
6,775,137 B2 * 8/2004 Chu et al. 361/696
6,877,551 B2 4/2005 Stoller
6,889,752 B2 5/2005 Stoller
7,254,022 B2 * 8/2007 Ebermann 361/696
2005/0016195 A1 * 1/2005 Bretschneider et al. 62/263

* cited by examiner

Primary Examiner—Boris Chervinsky
(74) *Attorney, Agent, or Firm*—Kramer & Amado, P.C.

(57) **ABSTRACT**

A cabinet for electronics equipment, comprising: a compartment for installing the electronics equipment; a door for accessing the compartment; an outer duct mounted on an outer surface of the door for directing exterior air around a heat exchanger core mounted in the door, the heat exchanger core for transferring heat from interior air in the compartment to the exterior air to thereby cool the interior air; an exhaust duct extending over a top surface of the compartment and pneumatically coupling with the outer duct when the door is in a closed position, the exhaust duct for exhausting the exterior air and for reducing solar loading on the top surface by transferring heat absorbed by the exhaust duct to the exterior air passing therethrough; and, one or more fans for forcing the exterior air in through the outer duct, around the heat exchanger core, and out through the exhaust duct, the one or more fans being mounted between the outer duct and the exhaust duct to thereby attenuate noise emitted by the one or more fans.

52 Claims, 14 Drawing Sheets

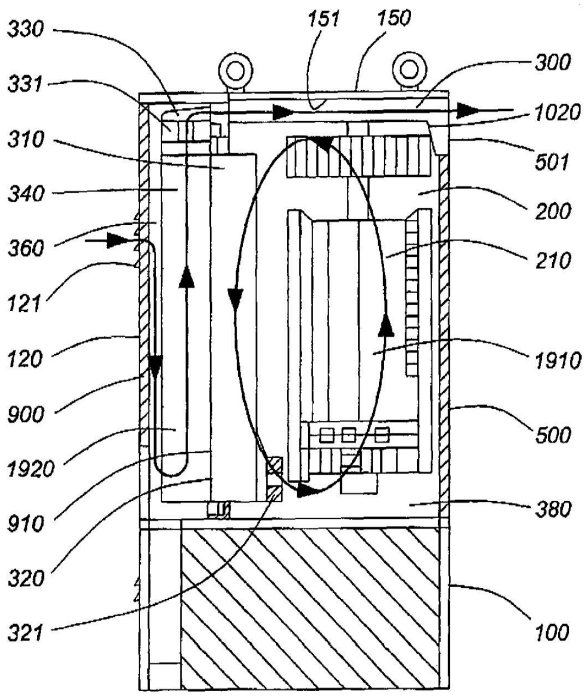

SEC et al. v. MRI
SEC Exhibit 1011.0001
IPR2023-00254

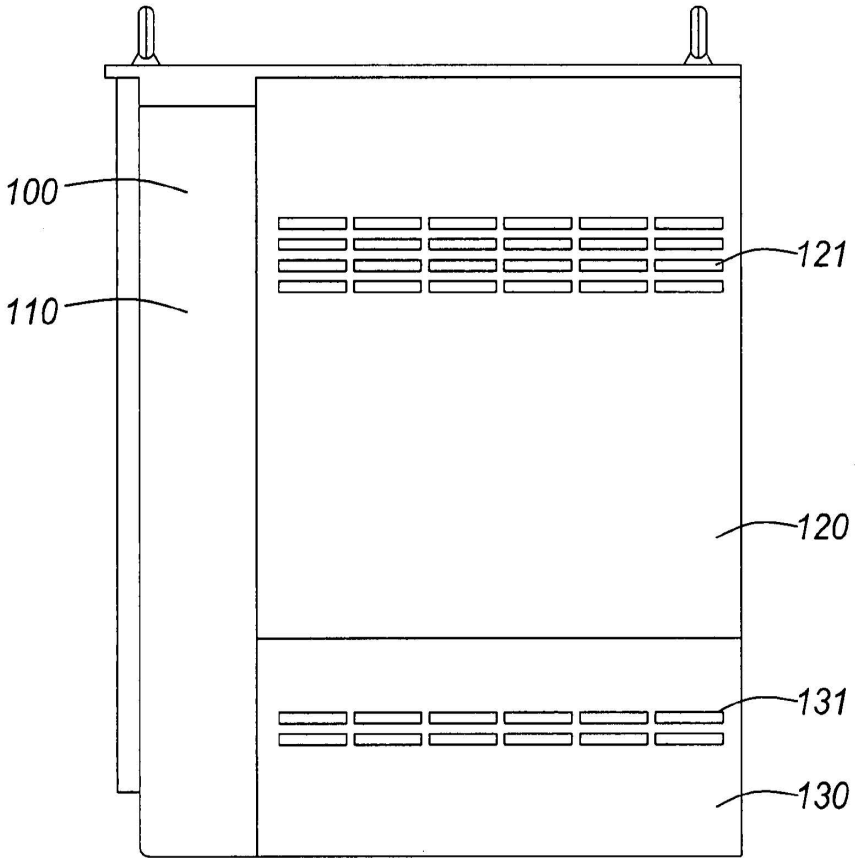

FIG. 1

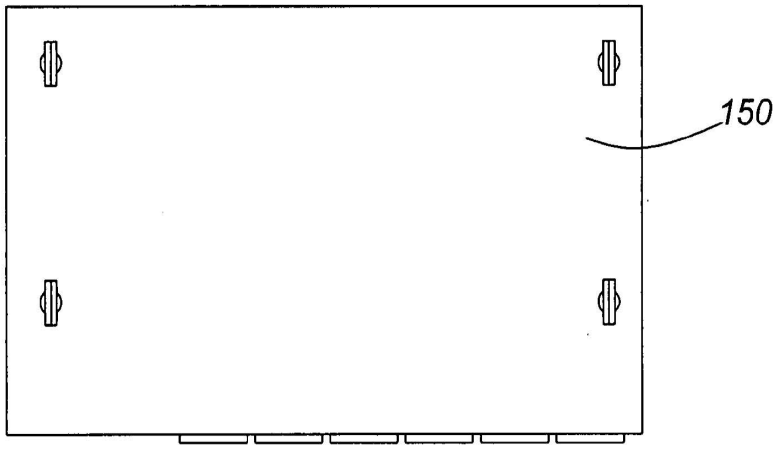

FIG. 2

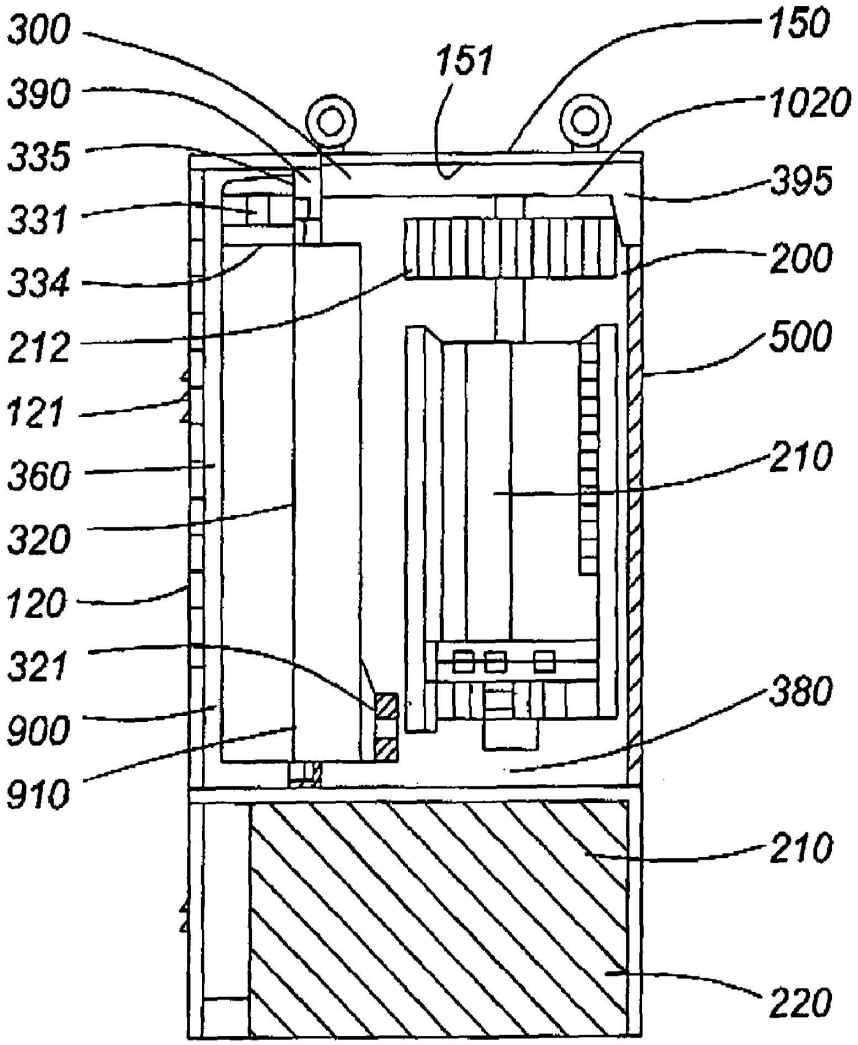
300
390
335
331
334
212
121
360
320
120
321
900
910
151
150
1020
395
200
500
210
380
210
220

FIG. 3

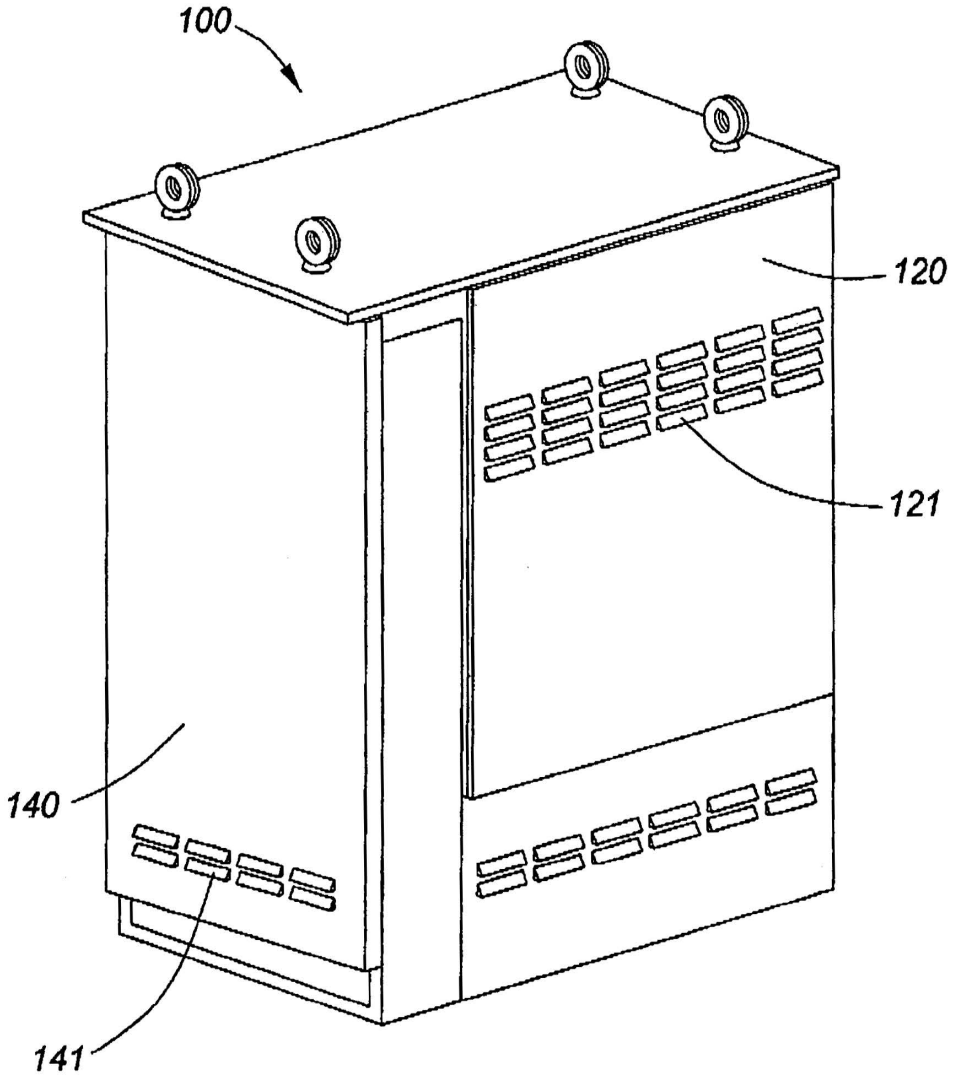

FIG. 4

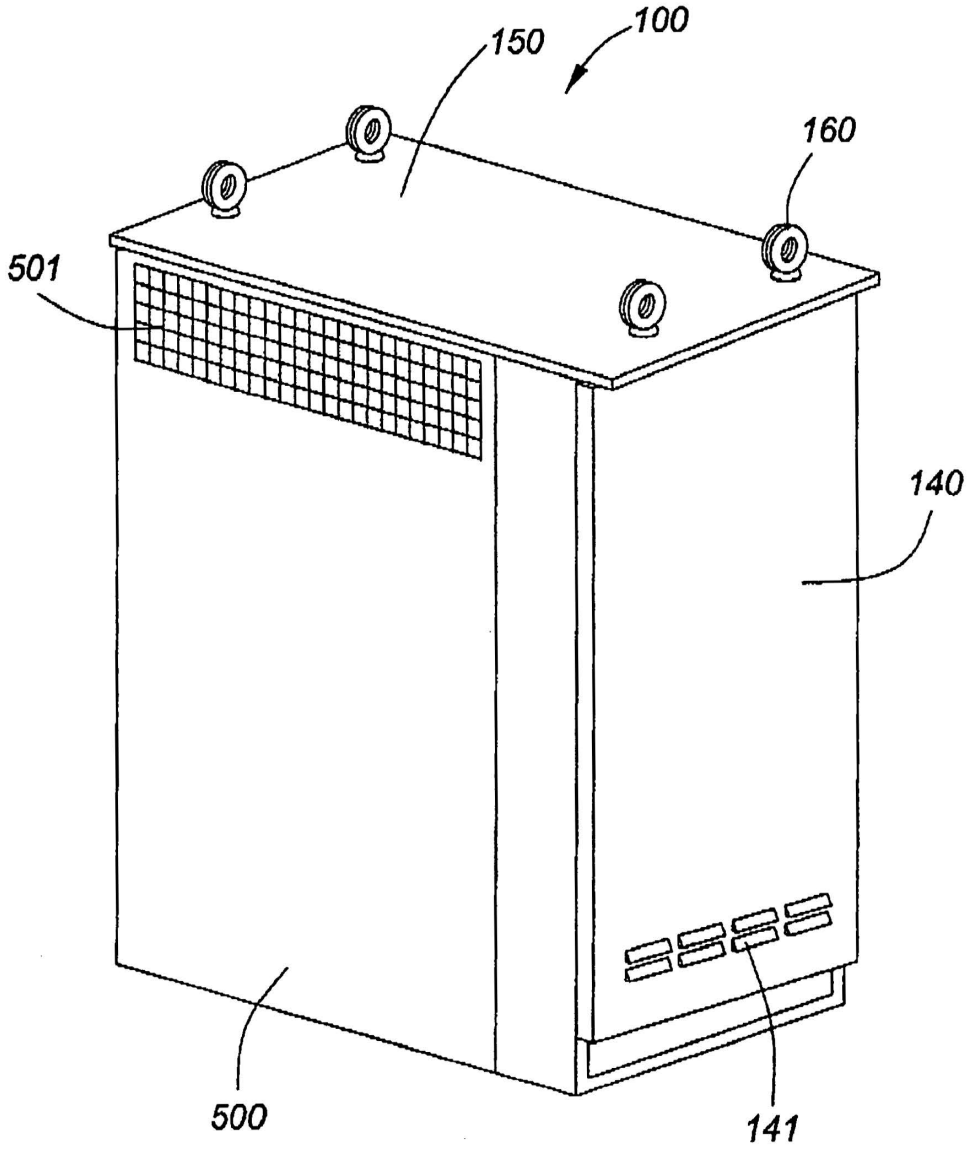

FIG. 5

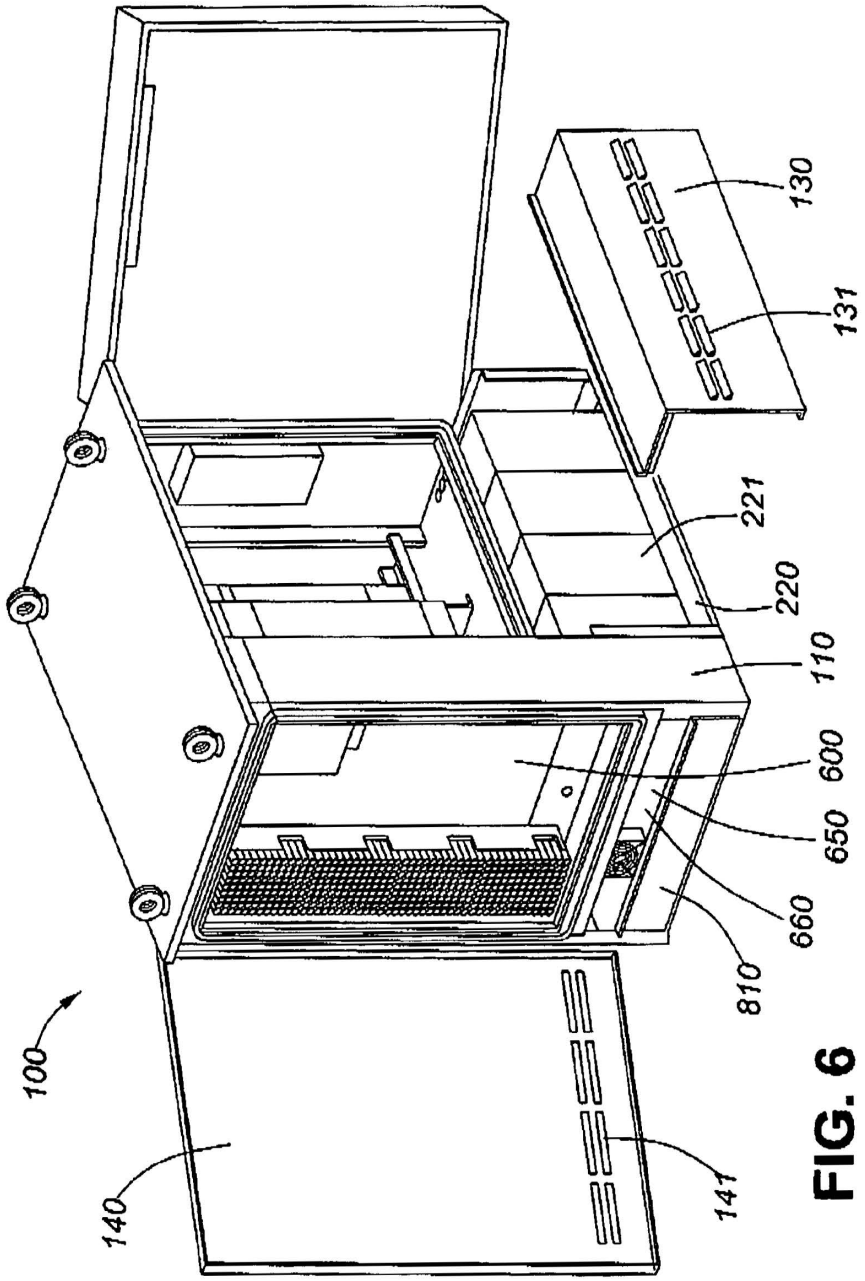

FIG. 6

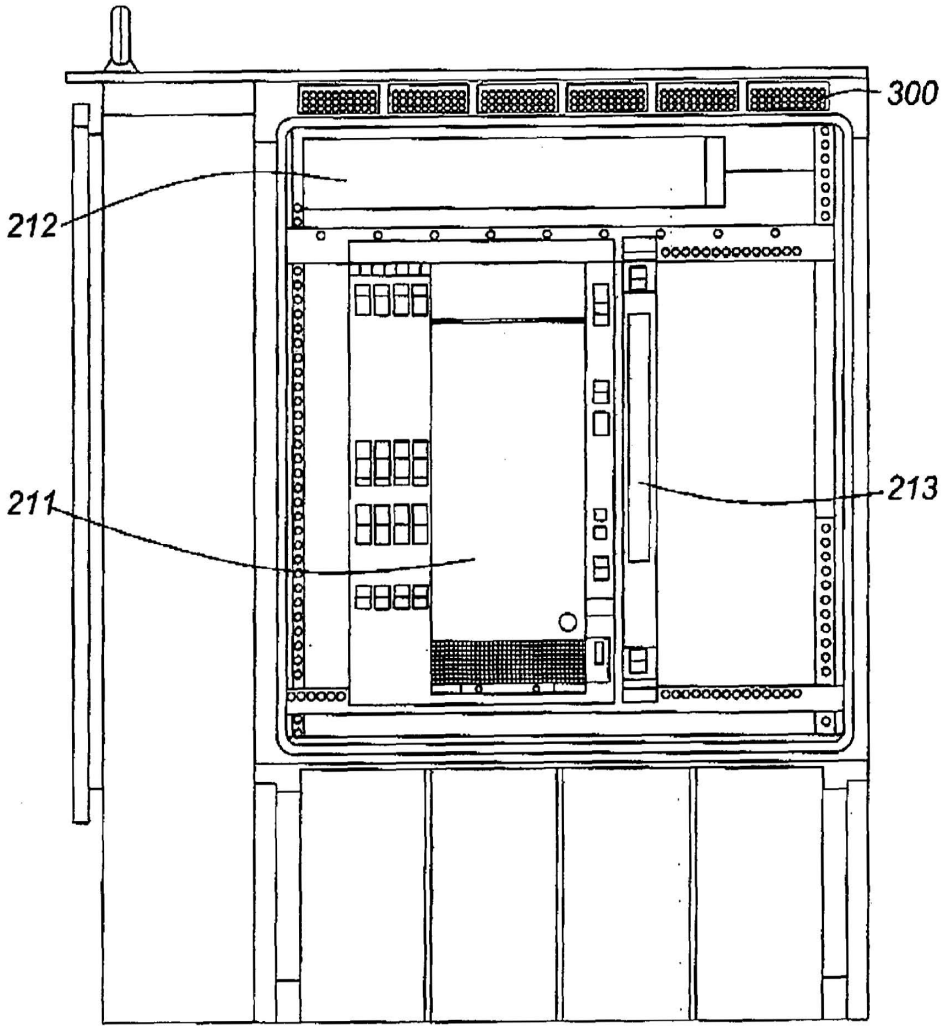

FIG. 7

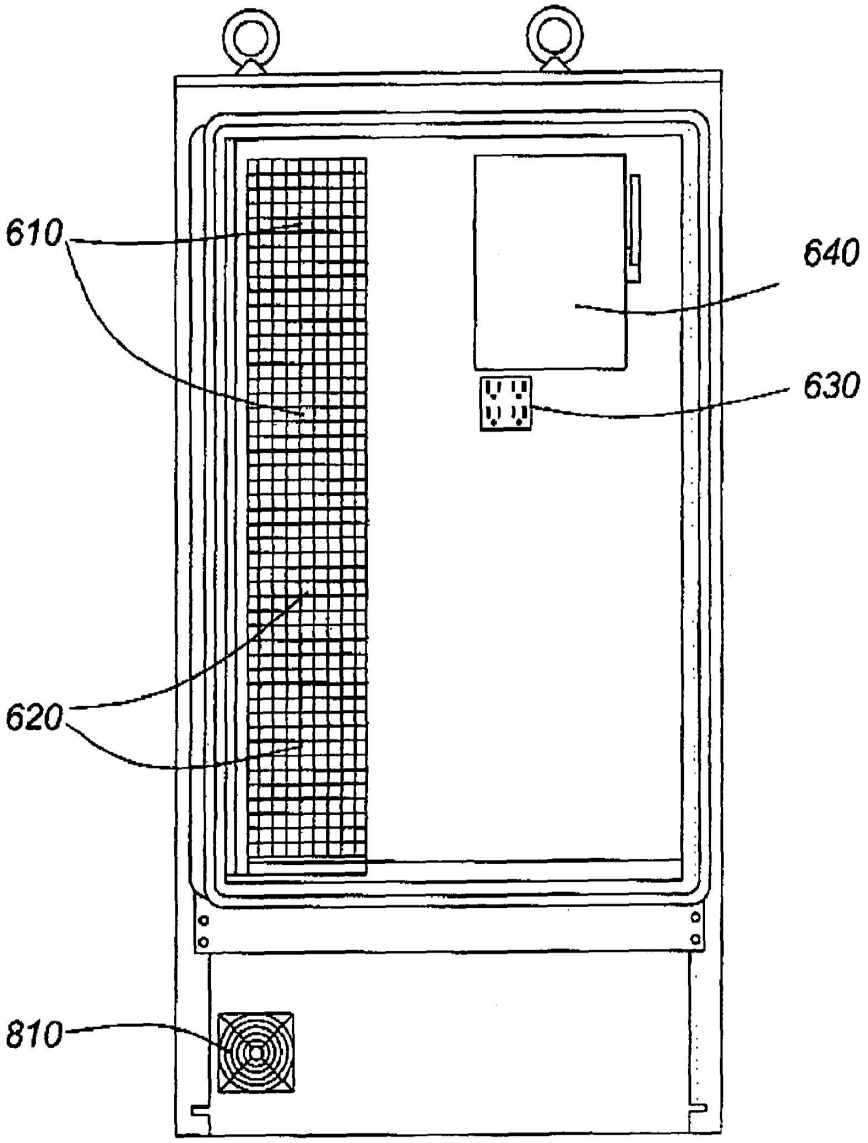

FIG. 8

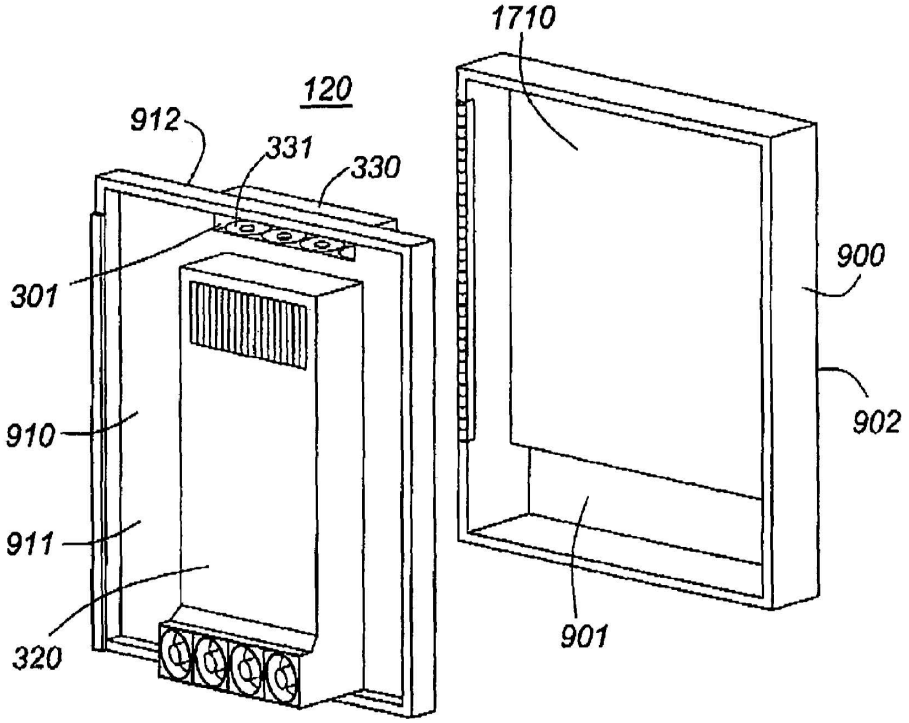

FIG. 9

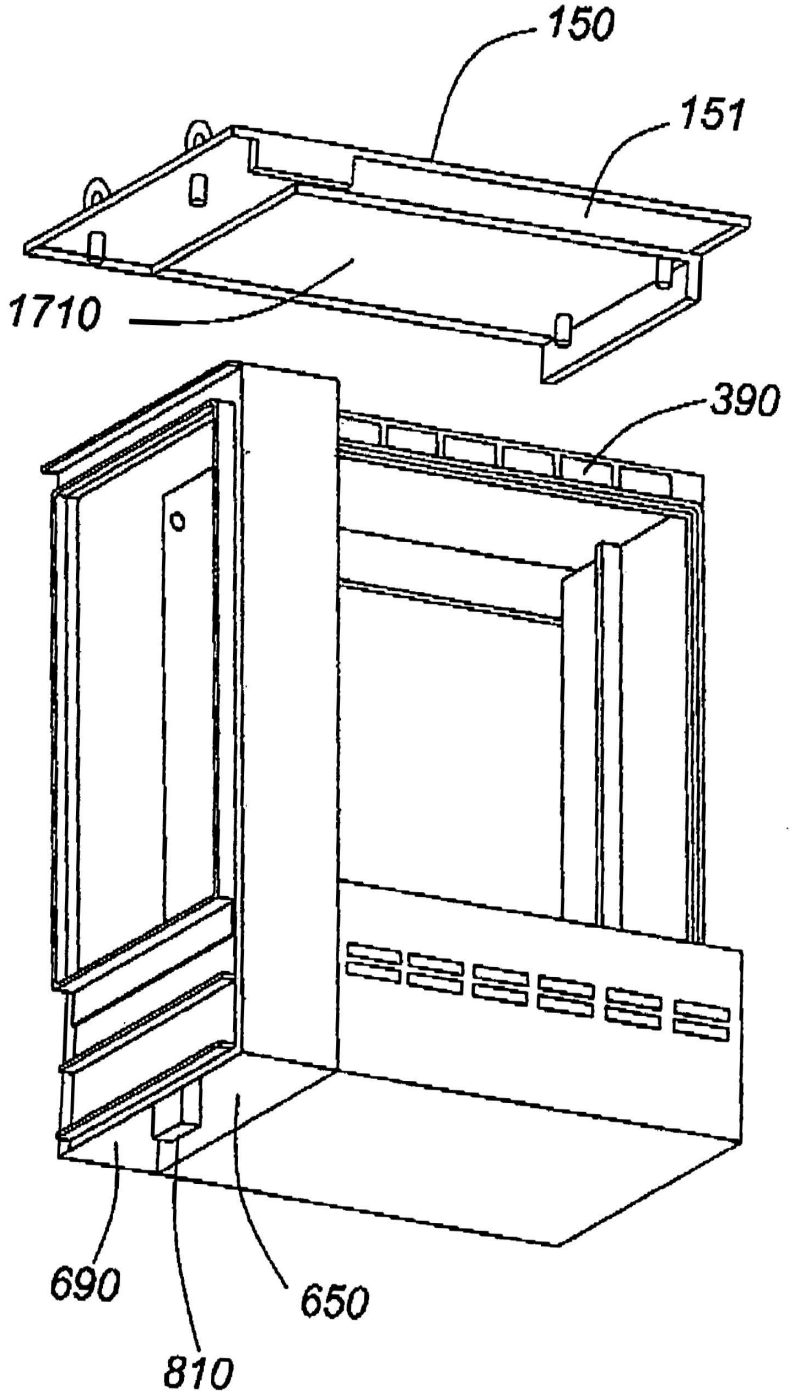

FIG. 10

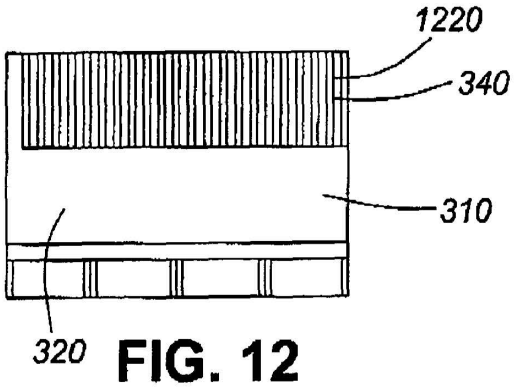

FIG. 12

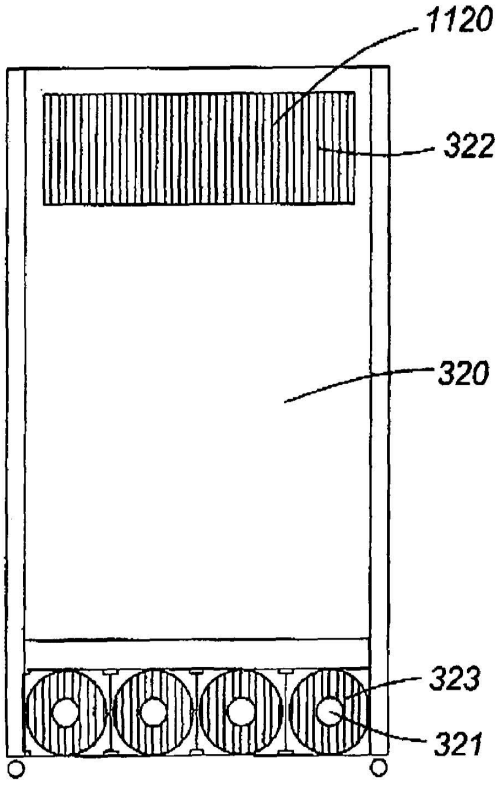

FIG. 11

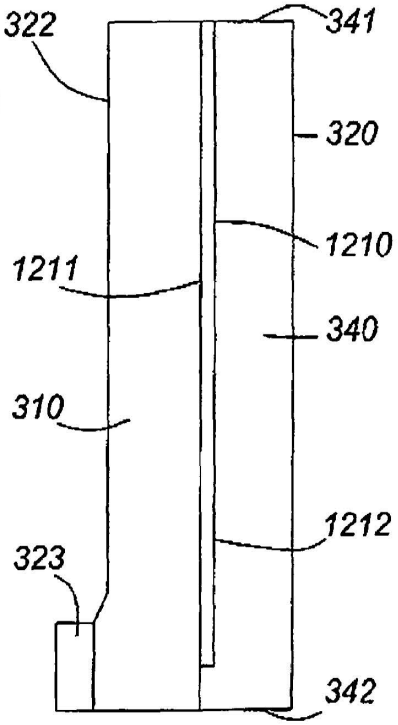

FIG. 13

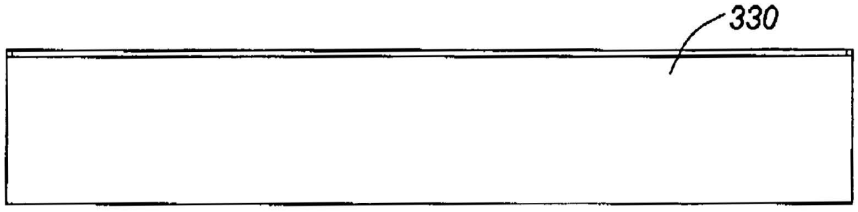

FIG. 14

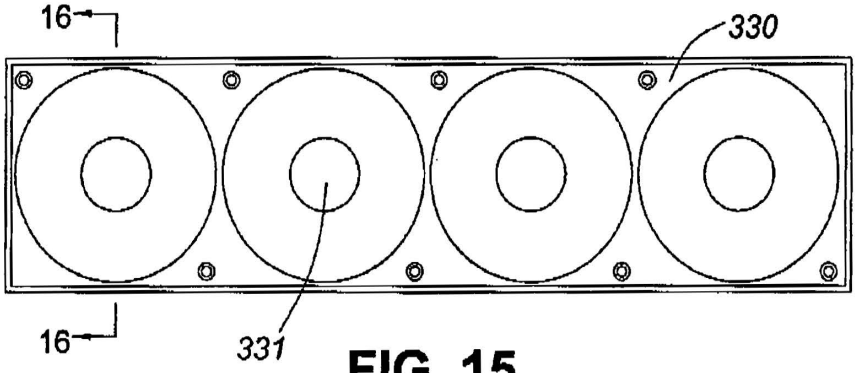

FIG. 15

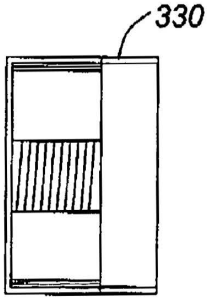

FIG. 16

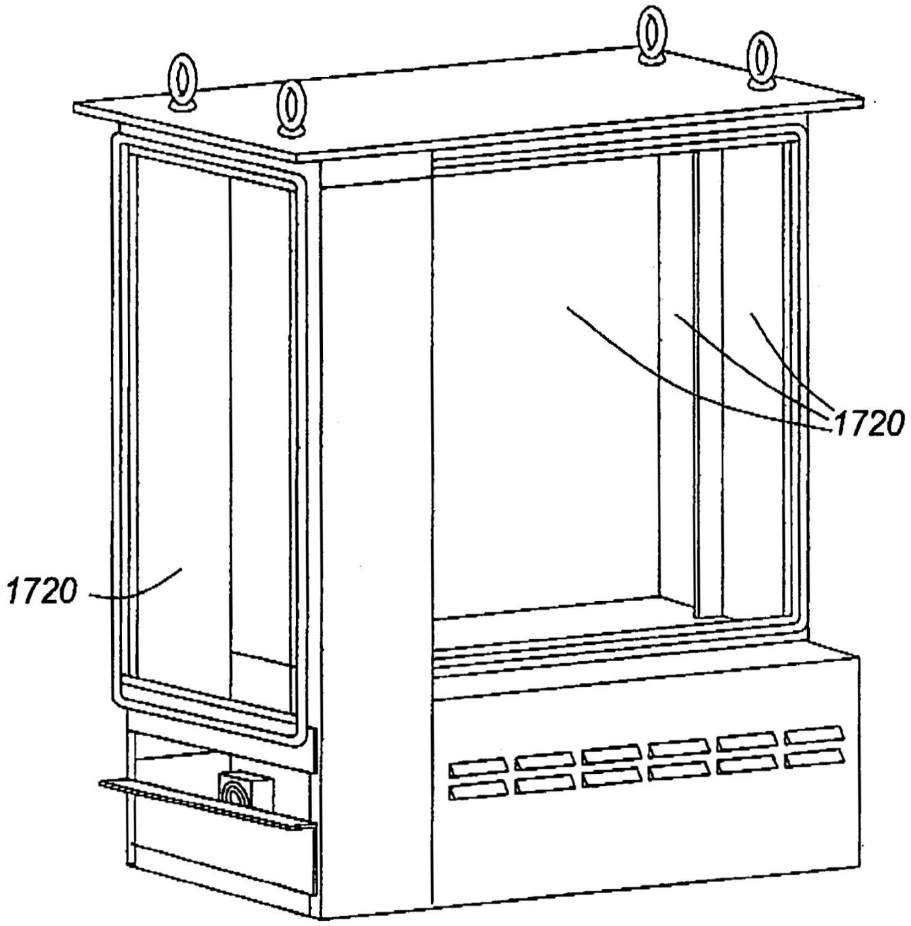

FIG. 17

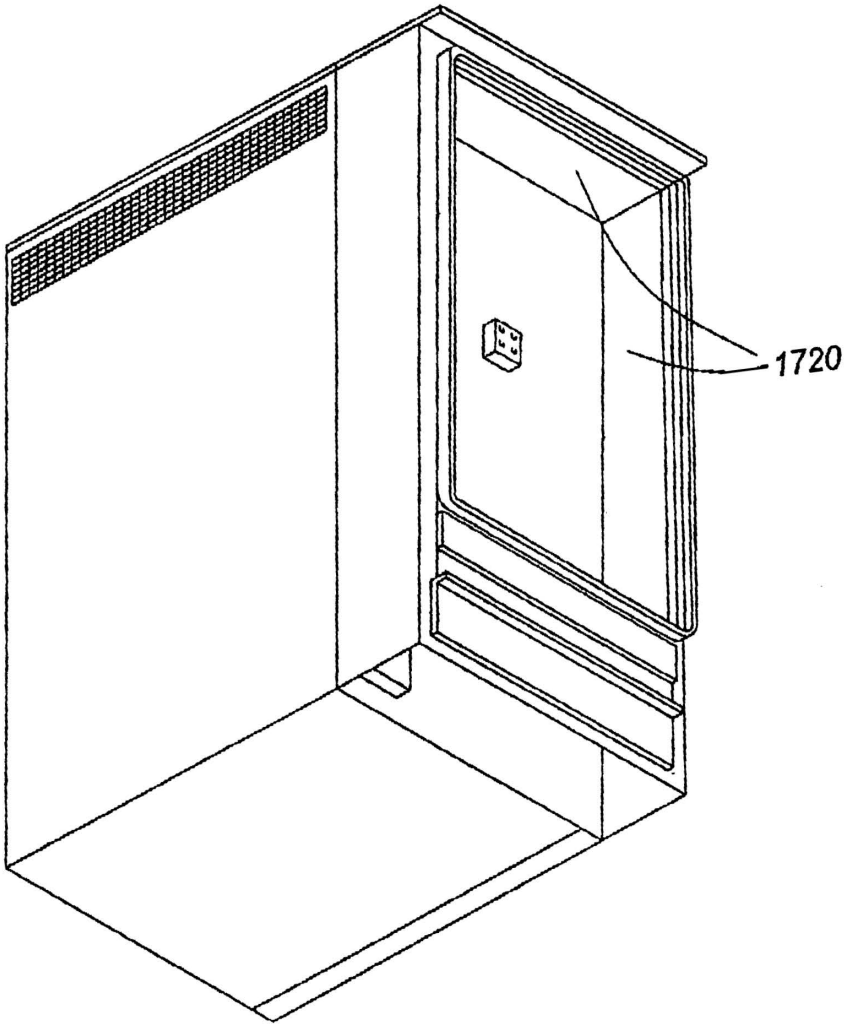

FIG. 18

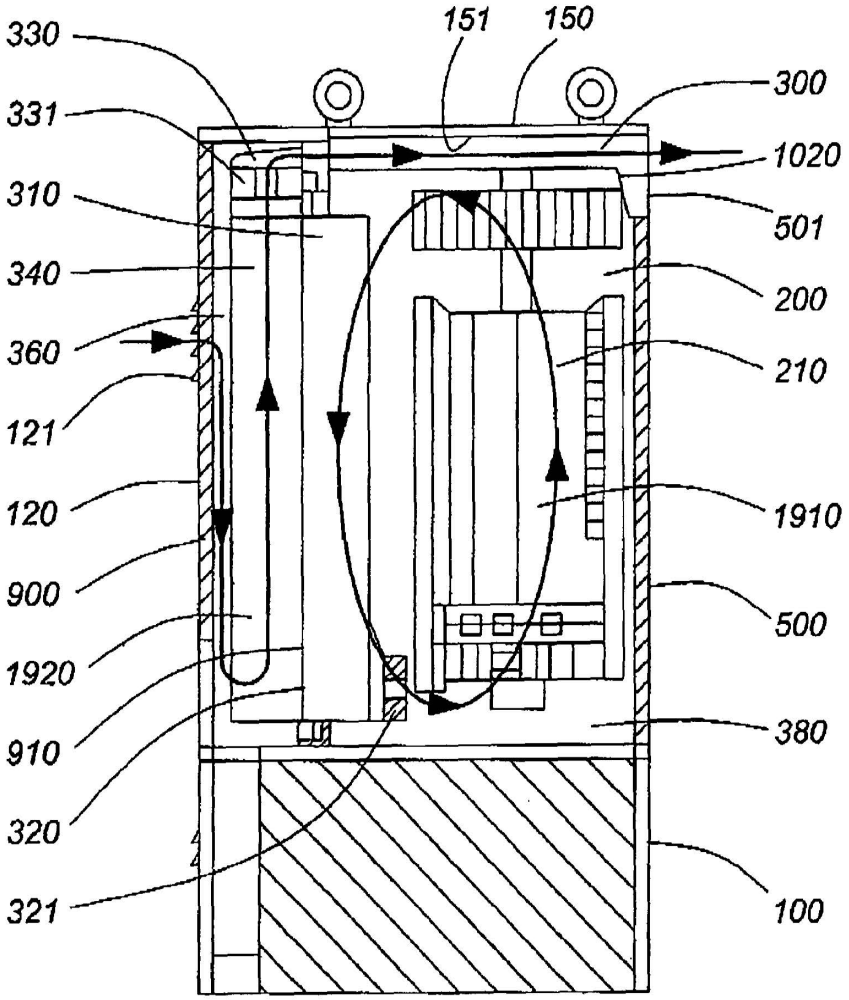
330
331
310
340
360
121
120
900
1920
910
320
321
151
150
300
1020
501
200
210
1910
500
380
100

FIG. 19

ELECTRONICS EQUIPMENT CABINET

FIELD OF THE INVENTION

This invention relates to the field of equipment cabinets, and more specifically, to cabinets for electronics equipment.

BACKGROUND OF THE INVENTION

The power requirements of electronics equipment (e.g., telecommunications equipment) is continually increasing. In particular, newer generation telecommunications equipment has increased power density. That is, the power requirements of such equipment per unit volume has increased. As a result, this newer generation equipment dissipates more heat during operation than older generation equipment. Dissipating heat from electronics equipment is important as excess operating temperatures may decrease the operating performance and life-span of the equipment. As such, electronics equipment installed in cabinets require sufficient cooling to ensure optimal operating performance and life-span. This is especially so for electronics equipment cabinets that are weatherproofed for outdoor use.

Several existing electronics equipment cabinets rely on the natural convection of heat dissipated from enclosed equipment to the exterior cabinet walls where it is then conducted to the external environment thereby providing cooling. However, such natural convection cooling techniques are typically not sufficient to provide the cooling needed to promote optimal performance of newer generation electronics equipment.

Other existing electronics equipment cabinets relay on forced convection cooling using fans, heat exchangers, etc. Refer to, for example, U.S. Pat. No. 6,164,369 to Stoller. However, the fans used in such equipment often generates excessive noise. This is problematic as noise emission limits for electronics equipment cabinets installed in the field are being routinely lowered.

A need therefore exists for an improved electronics equipment cabinet. Accordingly, a solution that addresses, at least in part, the above and other shortcomings is desired.

SUMMARY OF THE INVENTION

According to one aspect of the invention, there is provided a cabinet for electronics equipment, comprising: a compartment for installing the electronics equipment; a door for accessing the compartment; an outer duct mounted on an outer surface of the door for directing exterior air around a heat exchanger core mounted in the door, the heat exchanger core for transferring heat from interior air in the compartment to the exterior air to thereby cool the interior air; an exhaust duct extending over a top surface of the compartment and pneumatically coupling with the outer duct when the door is in a closed position, the exhaust duct for exhausting the exterior air and for reducing solar loading on the top surface by transferring heat absorbed by the exhaust duct to the exterior air passing therethrough; and, one or more fans for forcing the exterior air in through the outer duct, around the heat exchanger core, and out through the exhaust duct, the one or more fans being mounted between the outer duct and the exhaust duct to thereby attenuate noise emitted by the one or more fans.

Advantageously, the noise generated by the fans is attenuated as it passes along the outer and exhaust ducts, the fans being located between the two. To provide further noise attenuation, noise insulation may be added to the exhaust duct and to a door intake duct extending the outer duct. These ducts also serve to insulate the electronics compartment from solar loading on corresponding external surfaces.

BRIEF DESCRIPTION OF THE DRAWINGS

Further features and advantages of the embodiments of the present invention will become apparent from the following detailed description, taken in combination with the appended drawings, in which:

FIG. **1** is a front view illustrating an electronics equipment cabinet in accordance with an embodiment of the invention;

FIG. **2** is a top view of the electronics equipment cabinet of FIG. **1**;

FIG. **3** is a section view of the electronics equipment cabinet of FIG. **1** (along line A-A in FIG. **1**);

FIG. **4** is a front perspective view of the electronics equipment cabinet of FIG. **1**;

FIG. **5** is a rear perspective view of the electronics equipment cabinet of FIG. **1**;

FIG. **6** is a front perspective exploded view of the electronics equipment cabinet of FIG. **1**;

FIG. **7** is a front view (doors and panels removed) of the electronics equipment cabinet of FIG. **1**;

FIG. **8** is a left side view (doors and panels removed) of the electronics equipment cabinet of FIG. **1**;

FIG. **9** is a perspective view (exploded) of the inner side of the front door of the electronics equipment cabinet of FIG. **1**;

FIG. **10** is a front perspective view (top panel removed) of the electronics equipment cabinet of FIG. **1**;

FIG. **11** is a front view of the heat exchanger mounted in the front door of FIG. **9**;

FIG. **12** is a top view of the heat exchanger of FIG. **11**;

FIG. **13** is a right side view of the heat exchanger of FIG. **11**;

FIG. **14** is a front view of the outer loop fan module of the heat exchanger of FIG. **11**;

FIG. **15** is a top view of the outer loop fan module of FIG. **14**;

FIG. **16** is a section view of the outer loop fan module of FIG. **14** (along line A-A in FIG. **15**);

FIG. **17** is a front perspective view of the electronics equipment cabinet of FIG. **1** (doors and panels removed) illustrating the application of sound insulation and/or thermal insulation;

FIG. **18** a rear perspective view of the cabinet (doors and panels removed) illustrating the application of sound insulation and/or thermal insulation; and,

FIG. **19** is a section view (along line A-A in FIG. **1**) illustrating air flows through the electronics equipment cabinet.

It will be noted that throughout the appended drawings, like features are identified by like reference numerals.

DETAILED DESCRIPTION OF THE EMBODIMENTS

In the following description, details are set forth to provide an understanding of the invention. In some instances, certain circuits, structures and techniques have not been described or shown in detail in order not to obscure the invention.

FIG. **1** is a front view illustrating an electronics equipment cabinet **100** in accordance with an embodiment of the invention. FIG. **2** is a top view of the cabinet **100**. FIG. **3** is a section view of the cabinet **100** (along line A-A in FIG. **1**).

FIG. **4** is a front perspective view of the cabinet **100**. FIG. **5** is a rear perspective view of the cabinet **100**. FIG. **6** is a front perspective exploded view of the cabinet **100**. FIG. **7** is a front view (doors and panels removed) of the cabinet **100**. And, FIG. **8** is a left side view (doors and panels removed) of the cabinet **100**.

Referring to FIGS. **1-8**, the cabinet **100** has a frame or housing **110** in which is formed an electronics equipment compartment **200**, a battery compartment **220**, a splice compartment **600**, and a cable entry compartment **660**. In this embodiment, the electronics equipment compartment **200** is positioned above the battery compartment **220** and the splice compartment **600** is positioned above the cable entry compartment **660**, the splice and cable entry compartments **600**, **660** being generally adjacent to the electronics equipment and battery compartments **200**, **220**, respectively.

The electronics equipment compartment **200** has a front door **120** for providing access to the compartment **200** and to an exhaust duct **300**, which will be described below. The electronics equipment compartment **200** is for mounting electronics equipment **210** such as telecommunications equipment **211**, DC (Direct Current) power supplies **212**, and fiber termination panels **213**. The front door **120** has ventilation openings **121**, the operation of which will be described in more detail below. The front door **120** may be mounted to the housing **110** or compartment **200** with hinges, pins, etc.

The battery compartment **220** has a removable cover **130** for providing access to the compartment **220**. The battery compartment **220** is for mounting batteries **221** to provide standby power to the electronics equipment **210**. The removable cover **130** has ventilation openings **131**, the operation of which will be described in more detail below. The removable cover **130** may be mounted to the housing **110** with tabs, pins, etc.

The splice and cable entry compartments **600**, **660** share a side door **140** for providing access to these compartments **600**, **660**. The side door **140** has ventilation openings **141** opening into the cable entry compartment **660**, the operation of which will be described in more detail below. The splice compartment **600** is for mounting cable termination blocks **610**, **620** for POTS (Plain Old Telephone Service) lines, DSL (Digital Subscriber Line) lines, etc. The splice compartment **600** may also house an AC (Alternating Current) power panel **640** for providing AC power to the DC power supplies **212** to power the electronics equipment **210** and an AC convenience outlet **630**. The cable entry compartment **660** facilitates the entry of cables (not shown) to the splice compartment **600** and cabinet **100**. These cables enter the cable entry compartment **660** though an opening **690** in the bottom of that compartment **660**. The side door **140** may be mounted to the housing **110** with hinges, pins, etc.

Thus, the housing **110** has separate electronics equipment, battery, splice, and cable entry compartments **200**, **220**, **600**, **660**. Suitable openings (not shown) are provided between compartments for the passage of wiring (not shown).

Gases and heat generated by the batteries **221** are exhausted from the battery compartment **220** through the ventilation openings **131** in the battery compartment cover **130**. To provided enhanced ventilation for the battery compartment **220**, optionally, a fan **810** is mounted in the cable entry compartment **660** through the inner panel or wall **650** separating the cable entry compartment **660** from the battery compartment **220**. Noting that the ventilation openings **141** in the side door **140** open into the cable entry compartment **660**, the fan **810** functions to draw air in through the ventilation openings **141** in the side door **140**, through the panel **650**, across the battery compartment **220**, and out through the ventilation openings **131** in the battery compartment cover **130**. According to an alternate embodiment, the air flow is in the opposite direction with the fan **810** functioning to draw air in through the ventilation openings **131** in the battery compartment cover **130**, across the battery compartment **220**, through the panel **650**, and out through the ventilation openings **141** in the side door **140**.

FIG. **9** is a perspective view (exploded) of the inner side of the front door **120** of the electronics equipment cabinet **100** of FIG. **1**. FIG. **10** is a front perspective view (top panel **150** removed) of the cabinet **100**. FIG. **11** is a front view of the heat exchanger **320** mounted in the front door **120** of FIG. **9**. FIG. **12** is a top view of the heat exchanger **320**. FIG. **13** is a right side view of the heat exchanger **320**. FIG. **14** is a front view of the outer loop fan module **330** of the heat exchanger **320** of FIG. **11**. FIG. **15** is a top view of the outer loop fan module **330**. And, FIG. **16** is a section view of the outer loop fan module **330** (along line A-A in FIG. **15**).

Referring to FIGS. **1-16**, the enclosure has a top casing or panel **150** spaced from a top surface **1020** of the electronics equipment compartment **200** to form an enclosed exhaust duct **300** therebetween. The exhaust duct **300** extends across the top of the electronics equipment compartment **200**, from the front door **120** to the rear wall or panel **500** of the electronics equipment compartment **200**. The exhaust duct **300** has a front inlet opening **390** at the front door **120** and a rear outlet opening **395** at the rear panel **500**. In one embodiment, the rear panel **500** extends upwards to cap the rear opening **395** of the exhaust duct **300** and ventilation openings **501** for the exhaust duct **300** are provided in the rear panel **500**. Of course, the ventilation openings **501** may be integrated into the top panel **150**. When the front door **120** is in a closed position, the front inlet opening **390** of the exhaust duct **300** engages an outer loop fan module **330** of a heat exchanger **320** mounted in the front door **120**, as will be described in more detail below. The top panel **150** may be provided with one or more lifting eyes **160** mounted therethrough to facilitate lifting of the cabinet **100**.

The front door **120** has an outer casing or door **900** fitted over an inner panel or door **910**. When the front door **120** is in the closed position, the inner surface **911** of the inner door **910** faces the interior of the electronics equipment compartment **200** and the front inlet opening **390** of the exhaust duct **300**. The inner door **910** isolates the electronics equipment compartment **200** from the exterior environment when the front door **120** is closed. The outer door **900** is mounted over the outer surface **912** of the inner door **910**. The outer surface **902** of the outer door **900** faces the environment while the inner surface **901** of the outer door **900** faces the outer surface **912** of the inner door **910**. The outer door **900** is box-shaped such that when it is mounted over the outer surface **912** of the inner door **910** an enclosed door intake duct **360** is formed. The ventilation openings **121** in the outer door **120** open into this door intake duct **360**. In normal operation, the outer door **900** and inner door **910** are fastened together and function as one unit (i.e., a single door).

The heat exchanger **320** is mounted in the inner door **910**. The heat exchanger **320** has a enclosed outer loop duct **340** mounted on the outer surface **912** of the inner door **910**. In addition, the heat exchanger **320** has an enclosed inner loop duct **310** mounted on the inner surface **911** of the inner door **910**. The outer loop duct **340** and the inner loop duct **310** are generally coextensive being separated by a heat exchanger core **1210** which may be, or form, a portion of the inner door **910**. The heat exchanger core has an inner surface **1211**

facing the inner loop duct **310** and an outer surface **1212** facing the outer loop duct **340**. It is through the heat exchanger core **1210** that heat from the interior air in the electronics equipment compartment **200** will be dissipated to the external environment. Thus, the outer loop duct **340** is located in the door compartment **360** and the inner loop duct **310** is located in the electronics equipment compartment **200**.

According to one embodiment, the outer loop duct **340** is spaced from the inner surface **901** of the outer door **900**. This spacing allows for the optional application of sound insulation **1710** and/or thermal insulation **1720** on the inner surface **901** of the outer door **900** and for the circulation of air within the door intake duct **360**.

The outer loop duct **340** of the heat exchanger **320** has vertical heat radiating fins **1220** disposed therein and forming part of the heat exchanger core **1210** to improve heat transfer efficiency. Alternatively, the fins **1220** may be heat pipes, corrugated surfaces, or other heat exchanging elements known in the art. The outer loop duct **340** has an outlet opening **341** at its top end and an inlet opening **342** at its bottom end allowing for the passage of air therethrough.

The inner loop duct **310** has an inlet opening **322** at its top end an outlet opening **323** at its bottom end allowing for the passage of air therethrough. Both the inlet and outlet openings **322**, **323** face into the electronics equipment compartment **200**. Like the outer loop duct **340**, the inner loop duct **310** has vertical heat radiating fins **1120** disposed therein and forming part of the heat exchanger core **1210** to improve heat transfer efficiency. Alternatively, the fins **1120** may be heat pipes, corrugated surfaces, or other heat exchanging elements known in the art. In addition, the inner loop duct **310** has one or more fans **321** mounted at the bottom outlet opening **323** for drawing air in the electronics equipment compartment **200** over the electronics equipment **210**, through the top inlet opening **322** in the inner loop duct **310**, over the fins **1120** of the heat exchanger core **1210** disposed in the inner loop duct **310**, and out through the bottom outlet opening **323** of the inner loop duct **310**. This air flow will be referred to as the inner loop air flow **1910** below. According to an alternate embodiment, the fans **321** may be located at the top inlet opening **322**.

According to one embodiment, the fins **1120**, **1220** may represent opposite sides of a corrugated surface forming the heater exchanger core **1210**.

An outer loop fan module **330** is mounted above the top outlet opening **341** of the outer loop duct **340** on the outer surface **912** of the inner door **910**. The outer loop fan module **330** is mounted over an opening **301** in the inner door **910** which, when the front door **120** is in a closed position, is aligned with the front inlet opening **390** of the exhaust duct **300**. The outer loop fan module **330** is elbow-duct shaped having a bottom inlet opening **334** aligned with the top outlet opening **341** of the outer loop duct **340** and having a top outlet opening **335** aligned with the opening **301** in the inner door **910**. In addition, the outer loop fan module **330** has one or more fans **331** mounted therein for drawing air from the external environment through the ventilation openings **121** in the front door **120**, through the door intake duct **360**, through the bottom inlet opening **342** of the outer loop duct **340**, over the fins **1220** of the heat exchanger core **1210** disposed in the outer loop duct **340**, through the top outlet opening **341** in the outer loop duct **310**, through the bottom inlet opening **334** of the outer loop fan module **330**, through the outer loop fan module **330**, through the top outlet opening **335** of the outer loop fan module **330**, through the opening **301** in the inner door **910**, through the front inlet opening **390** of the exhaust duct **300**, through the exhaust duct **300**, through the rear outlet opening **395** of the exhaust duct **300**, and out through the ventilation openings **501** in the rear panel **500**. This air flow will be referred to as the outer loop air flow **1920** below.

Of course, rather than a separate outer loop fan module **330**, the outer loop fan module **330** and the outer loop duct **340** may be a single unit.

FIG. **17** is a front perspective view of the electronics equipment cabinet **100** of FIG. **1** (doors **120**, **140** and panels **130** removed) illustrating the application of sound insulation **1710** and/or thermal insulation **1720**. And, FIG. **18** a rear perspective view of the cabinet **100** (doors **120**, **140** and panels **130** removed) illustrating the application of sound insulation **1710** and/or thermal insulation **1720**. To improve the thermal performance of the cabinet **100** and to reduce noise emissions, optional thermal insulation **1720** and/or sound insulation **1710** may be applied to the inner surface **901** of the front door **900**, to the inner surface **151** of the top panel **150**, and to the inner surfaces of exterior facing walls of the electronics equipment and splice compartments **200**, **600**. The sound insulation **1710** functions to reduce noise emissions generated by the fans **321**, **331** and/or electronic equipment **210**. The thermal insulation **1720** functions to reduce solar/thermal loading from the sun and/or the external environment.

FIG. **19** is a section view (along line A-A in FIG. **1**) illustrating air flows **1910**, **1920** through the electronics equipment cabinet **100**. In operation, with the front door **120** closed, inner loop air flow **1910** circulates warm interior air from the top of the electronics equipment compartment **200** through the inner loop duct **310** of the heat exchanger **320** where heat is transferred to cool exterior air being circulated through the outer loop duct **340** of the heat exchanger **320**. The two air flows **1910** and **1920** are isolated and do not mix (i.e., exterior air does not enter the electronics equipment compartment **200**). The interior air flows in a direction from top to bottom of the inner loop duct **310** while the exterior air flows in a direction from bottom to top of the outer loop duct **340**. Thus, the heat exchanger **320** may be referred to as a "counterflow" heat exchanger. These opposite air flow directions improve the heat transfer efficiency of the heat exchanger **320**. The cooled interior air exits the inner loop duct **310** into the bottom of the electronics equipment compartment **200** where it absorbs heat from the electronics equipment **210** and is warmed as it rises to the top of the compartment **200**. One or more vertical baffles **380** may be provided at the bottom of the electronics equipment compartment **200**, extending from the front to the back of the compartment **200**, to distribute and direct the cooled air over the electronics equipment **210**. The cool exterior air in the outer loop duct **340** absorbs heat from the interior air, is warmed, and is expelled through the exhaust duct **300**. The top panel **150**, being located on the top of the cabinet **100**, absorbs heat from the sun (i.e., solar thermal loading) when the cabinet **100** is located outdoors. This heat is transferred from the inner surface **151** of the top panel **150** to the exterior air flowing through the exhaust duct **300** further warming this air before it is expelled through the ventilation openings **501** at the rear of the cabinet **100**.

According to one embodiment, the air flows **1910**, **1920** are facilitated by natural convection rather than by one or more of the inner loop and outer loop fans **321**, **331**. According to one embodiment, the cabinet **100** is primarily constructed from sheet metal.

Advantageously, the cabinet **100** and its front door **120** allows for the ducting **300**, **360** of the outer loop air flow

1920 both before and after the fans 331 and heat exchanger 230. This ducting 300, 360 may have sound absorbing/attenuating material 1710 added to the walls thereof to create sound deadening spaces. This ducting 300, 360 also serves to insulate the electronics compartment 200 from solar loading on the corresponding external surfaces. The placement of the outer loop fan module 330 between the outer loop duct 340 and the exhaust duct 300, well away from the ventilation openings 121, 501 in the front door 120 and rear panel 500, reduces fan 331 noise emitted by the cabinet 100. In addition, this placement improves fan 331 life as the fans 331, being remote from the ventilation openings 121, 501, are protected from the elements (i.e., rain, snow, dust, etc.). Furthermore, the reduction in solar loading on the top panel 150 by the exhaust duct 300 allows for a smaller capacity heat exchanger 320 and fans 321, 331 further enhancing the efficiency of the cabinet 100. In addition, the baffling 380 provided in the electronics equipment compartment 200 improves circulation of cooled interior air over the heat producing electronics equipment 210 hence increasing heat transfer from this equipment. Moreover, the location of the ventilation openings 121, 501 on opposite sides (i.e., front and back) of the cabinet 100 helps to prevent re-circulation of exterior air hence improving the thermal efficiency of the cabinet.

The embodiments of the invention described above are intended to be exemplary only. Those skilled in this art will understand that various modifications of detail may be made to these embodiments, all of which come within the scope of the invention.

What is claimed is:

1. A cabinet for electronics equipment, comprising:
a compartment for installing the electronics equipment;
a door for accessing the compartment;
an outer duct mounted on an outer surface of the door for directing exterior air around a heat exchanger core mounted in the door, the heat exchanger core for transferring heat from interior air in the compartment to the exterior air to thereby cool the interior air;
an exhaust duct extending over a top surface of the compartment and pneumatically coupling with the outer duct when the door is in a closed position, the exhaust duct for exhausting the exterior air and for reducing solar loading on the top surface by transferring heat absorbed by the exhaust duct to the exterior air passing therethrough; and,
one or more fans for forcing the exterior air in through the outer duct, around the heat exchanger core, and out through the exhaust duct, the one or more fans being mounted between the outer duct and the exhaust duct to thereby attenuate noise emitted by the one or more fans.

2. The cabinet of claim 1 and further comprising an inner duct mounted on an inner surface of the door for circulating the interior air over the heat exchanger core.

3. The cabinet of claim 2 and further comprising one or more fans for forcing the interior air through the inner duct.

4. The cabinet of claim 3 wherein the one or more fans are disposed at least one of a lower outlet opening in the inner duct and an upper inlet opening of the inner duct.

5. The cabinet of claim 1 wherein the outer duct has a lower inlet opening and an upper outlet opening, wherein the exhaust duct has a front inlet opening and a rear outlet opening, and wherein the one or more fans are disposed between the upper outlet opening and the front inlet opening.

6. The cabinet of claim 2 wherein the heater exchanger core, the inner duct, and the outer duct comprise a heat exchanger.

7. The cabinet of claim 6 wherein the heat exchanger core has at least one of fins disposed thereon and corrugations formed therein to improve thermal efficiency by increasing surface area.

8. The cabinet of claim 1 wherein the door is hinge mounted to the compartment.

9. The cabinet of claim 1 wherein the door is an inner door and further comprising an outer door mounted over the inner door and spaced therefrom to form a door intake duct, a lower inlet opening of the outer duct opening into the door intake duct, the outer door having at least one ventilation opening to allow entry of the exterior air into the door intake duct.

10. The cabinet of claim 9 and further comprising at least one of sound insulation and thermal insulation applied to an inner surface of the outer door.

11. The cabinet of claim 1 and further comprising at least one of sound insulation and thermal insulation applied to an inner surface of the exhaust duct.

12. The cabinet of claim 1 and further comprising at least one of sound insulation and thermal insulation applied to at least one inner surface of the compartment.

13. The cabinet of claim 9 wherein the inner door extends over a front inlet opening of the exhaust duct and wherein an opening is provided in the inner door to allow for pneumatic coupling of the outer duct to the front inlet opening of the exhaust duct.

14. The cabinet of claim 1 and further comprising a battery compartment for installing batteries to supply DC power to the electronics equipment.

15. The cabinet of claim 1 and further comprising a splice compartment for installing terminal blocks for terminating cables to be accessed by the electronics equipment.

16. The cabinet of claim 1 and further comprising a cable entry compartment for receiving cables to be terminated and to be accessed by the electronics equipment.

17. The cabinet of claim 1 wherein the electronics equipment is telecommunications electronics equipment.

18. The cabinet of claim 1 wherein the cabinet is a weatherproofed cabinet.

19. The cabinet of claim 6 wherein the heat exchanger is a counterflow heat exchanger.

20. The cabinet of claim 9 wherein the lower inlet opening of the outer duct is spaced from the at least one ventilation opening in the outer door.

21. The cabinet of claim 1 wherein the outer duct has a lower inlet opening and the exhaust duct has a rear outlet opening and wherein the lower inlet opening and the rear outlet opening are located on opposite sides of the cabinet.

22. The cabinet of claim 1 wherein the one or more fans are disposed in a fan module coupled between the outer duct and the exhaust duct.

23. The cabinet of claim 2 and further comprising at least one baffle mounted in the compartment to distribute the interior air from a lower outlet opening of the inner duct over the electronic equipment.

24. The cabinet of claim 1 wherein the door is essentially vertical and the exhaust duct is essentially horizontal.

25. The cabinet of claim 1 wherein the compartment is formed in the cabinet.

26. A cabinet for electronics equipment, comprising:
a compartment for installing the electronics equipment;
an exhaust duct extending over a top surface of the compartment;
a door having an open position for providing access to the compartment and a closed position for separating interior air in the compartment from exterior air without,

the door having an inner surface facing the interior of the compartment when the door is in the closed position and an outer surface;

a heat exchanger core mounted in the door for transferring heat from the interior air to the exterior air;

an inner duct mounted on the inner surface for circulating the interior air over an inner surface of the heat exchanger core; and,

an outer duct mounted on the outer surface and pneumatically coupled to the exhaust duct when the door is in the closed position, the outer duct and the exhaust duct for passing the exterior air over an outer surface of the heat exchanger core and over an inner surface of the exhaust duct to absorb heat therefrom to thereby cool the interior air.

27. The cabinet of claim **26** and further comprising one or more fans for forcing the interior air through the inner duct.

28. The cabinet of claim **27** wherein the one or more fans are disposed in the inner duct.

29. The cabinet of claim **27** wherein the inner duct has an upper inlet opening and a lower outlet opening and wherein the one or more fans are disposed at least one of the upper inlet opening and the lower outlet opening.

30. The cabinet of claim **26** and further comprising one or more fans for forcing the exterior air through the outer duct and exhaust duct.

31. The cabinet of claim **30** wherein the one or more fans are disposed in the outer duct.

32. The cabinet of claim **30** wherein the outer duct has a lower inlet opening and an upper outlet opening, wherein the exhaust duct has a front inlet opening and a rear outlet opening, and wherein the one or more fans are disposed between the upper outlet opening and the front inlet opening.

33. The cabinet of claim **26** wherein the heater exchanger core, the inner duct, and the outer duct comprise a heat exchanger.

34. The cabinet of claim **26** wherein at least one of the inner and outer surfaces of the heat exchanger core has at least one of fins disposed thereon and corrugations formed therein to improve thermal efficiency by increasing surface area.

35. The cabinet of claim **26** wherein the door is hinge mounted to the compartment.

36. The cabinet of claim **35** wherein the door is an inner door and further comprising an outer door mounted over the inner door and spaced therefrom to form a door intake duct, a lower inlet opening of the outer duct opening into the door intake duct, the outer door having at least one ventilation opening to allow entry of the exterior air into the door intake duct.

37. The cabinet of claim **36** and further comprising at least one of sound insulation and thermal insulation applied to an inner surface of the outer door.

38. The cabinet of claim **26** and further comprising at least one of sound insulation and thermal insulation applied to the inner surface of the exhaust duct.

39. The cabinet of claim **26** and further comprising at least one of sound insulation and thermal insulation applied to at least one inner surface of the compartment.

40. The cabinet of claim **36** wherein the inner door extends over a front inlet opening of the exhaust duct and wherein an opening is provided in the inner door to allow for the pneumatic coupling of the outer duct to the front inlet opening of the exhaust duct.

41. The cabinet of claim **26** and further comprising a battery compartment for installing batteries to supply DC power to the electronics equipment.

42. The cabinet of claim **26** and further comprising a splice compartment for installing terminal blocks for terminating cables to be accessed by the electronics equipment.

43. The cabinet of claim **26** and further comprising a cable entry compartment for receiving cables to be terminated and to be accessed by the electronics equipment.

44. The cabinet of claim **26** wherein the electronics equipment is telecommunications electronics equipment.

45. The cabinet of claim **26** wherein the cabinet is a weatherproofed cabinet.

46. The cabinet of claim **33** wherein the heat exchanger is a counterflow heat exchanger.

47. The cabinet of claim **36** wherein the lower inlet opening of the outer duct is spaced from the at least one ventilation opening in the outer door.

48. The cabinet of claim **26** wherein the outer duct has a lower inlet opening and the exhaust duct has a rear outlet opening and wherein the lower inlet opening and the rear outlet opening are located on opposite sides of the cabinet.

49. The cabinet of claim **30** wherein the one or more fans are disposed in a fan module coupled between the outer duct and the exhaust duct.

50. The cabinet of claim **26** and further comprising at least one baffle mounted in the compartment to distribute the interior air from a lower outlet opening of the inner duct over the electronic equipment.

51. The cabinet of claim **26** wherein the door is essentially vertical and the exhaust duct is essentially horizontal.

52. The cabinet of claim **26** wherein the compartment is formed in the cabinet.

* * * * *