UNITED STATES PATENT AND TRADEMARK OFFICE

BEFORE THE PATENT TRIAL AND APPEAL BOARD

SAMSUNG ELECTRONICS CO., LTD. AND SAMSUNG ELECTRONICS AMERICA, INC.
Petitioners v.

MANUFACTURING RESOURCES INTERNATIONAL, INC.
Patent Owner

Case IPR2023-00254
Patent 10,506,740

PATENT OWNER'S RESPONSE

TABLE OF CONTENTS

I. INTRODUCTION 1

II. MRI'S INNOVATIVE THERMAL MANAGEMENT SYSTEM AND SAMSUNG'S FAILURES 2

A. Background of the Technology 2

B. The '740 Patent's Innovative Cooling System 4

III. LEVEL OF SKILL IN THE ART 6

IV. PETITIONER'S EXPERT TESTIMONY SHOULD BE GIVEN LITTLE WEIGHT 7

V. CLAIM CONSTRUCTION 9

VI. PETITIONER MISREADS THE CHALLENGED PATENT 10

A. The proper plain and ordinary meaning of "heat exchanger" is the known device in the art of thermal management referred to as a "heat exchanger" 10

B. Petitioner improperly attempts to transform a heat exchanger into anything that exchanges heat in order to sweep in prior art 15

VII. PETITIONER FAILS TO SHOW THE ASSERTED PATENTS ARE OBVIOUS 18

A. Karppanen in view of the knowledge of a POSITA does not render the Challenged Claims obvious. 19

1. Claims 1, 8, and 17: Karppanen does not render obvious a "closed loop" under Petitioner's Proposed Construction 19

2. Claims 1, 8, and 17: Karppanen does not render obvious a "heat exchanger" 22

i. Karppanen does not describe a heat exchanger 22

ii. Petitioner and Its Expert Argue for an Insupportably Broad Meaning of Heat Exchanger 26

3. Claims 1, 11, and 17: Karppanen does not render obvious "a gas circulation" or an "air circulation device" positioned to force ambient air or circulating gas "through the common heat exchanger" 28

4. Claims 2, 8, 13, and 17: Karppanen does not render obvious "a space defined between the rear portion of the electronic image assembly and the substantially planar surface, wherein the space is in gaseous communication with the open loop ambient air flow path" 31

B. Yare in view of the knowledge of a POSITA does not render the Challenged Claims obvious.....37

1. Claim 1, 8, and 17: Yare does not render obvious a "a closed loop gas circulation path about the electronic image assembly" 37

i. Yare Is Silent as to the Form of Electronic Image Assembly Cooling System Within the Electronic Display 38

ii. Petitioner and Its Expert Misread Yare 41

2. Claim 1, 11, and 17: Yare does not render obvious "a gas circulation" or an "air circulation device" positioned to force ambient air or circulating gas through the common heat exchanger.....44

3. Claims 5 and 17: Yare does not render obvious "a front display surface spaced apart from the front potion of the electronic image assembly" and a "front channel defined by [that] channel' that "form[s] part of the closed loop gas circulation path".....47

4. Claims 2, 8, 13, and 17: Yare does not render obvious "a space defined between the rear portion of the electronic image assembly and the substantially planar surface, wherein the space is in gaseous communication with the open loop ambient air flow path" 49

VIII. OBJECTIVE INDICIA SHOW THE NON-OBVIOUSNESS OF THE CHALLENGED CLAIMS. 54

A. There is a Nexus to Both Samsung and MRI Products 55

B. Samsung's Long Felt Need, Failure, and Copying 56

C. Commercial Success 61

D. Industry Praise and Willingness of Others to License the '740 Patent 63

IX. CONCLUSION 67

EXHIBIT LIST

Exhibit	Description	Confidentiality Designation
2001	MRI-ITC-1331_0000435123-24 (4/24/2020 Romulus Stoain email to Dunn)	Filed Publicly
2002	MRI-ITC-1331_0000435125-27, Mutual Non-Disclosure Agreement	Filed Publicly
2003	MRI-ITC-1331_0000435133-34 (5/4/2020 Romulus Stoain email to Dunn)	Filed Publicly
2004	Response to Office Action filed December 18, 2020	Filed Publicly
2005	Office Action mailed April 11, 2018, in Application No. 12/234,360	Filed Publicly
2006	Office Action mailed August 11, 2011, in Application No. 12/237,365	Filed Publicly
2007	Office Action mailed November 24, 2020, in Application No. 16/983,842	Filed Publicly
2008	Decision Denying Institution of *Inter Partes* Review of U.S. Patent No. 8,854,572 in *Civiq Smartscapes LLC v. Manufacturing Resources International, Inc.*, IPR2018-00774, Paper 6 (PTAB Sep. 25, 2018)	Filed Publicly
2009	Curriculum Vitae of Dr. Himanshu Pokharna	Filed Publicly
2010	U.S. Provisional Application No. 61/138,736 (the "'736 Application")	Filed Publicly
2011	U.S. Provisional Application 61/033,064 (the "'064 Application")	Filed Publicly
2012	MRI-ITC-1331_0000092739	Filed Publicly
2013	*Certain Outdoor and Semi-Outdoor Electronic Displays*, Inv. No. 337-TA-1331, Day 1 Public Hearing Tr. (June 26, 2023)	Filed Publicly
2014	*Certain Outdoor and Semi-Outdoor Electronic Displays*, Inv. No. 337-TA-1331, Day 4 Public Hearing Tr. (June 29, 2023)	Filed Publicly
2015	*Certain Outdoor and Semi-Outdoor Electronic Displays*, Inv. No. 337-TA-1331, Day 5 Public Hearing Tr. (June 30, 2023)	Filed Publicly

Exhibit	Description	Confidentiality Designation
2016	*Certain Outdoor and Semi-Outdoor Electronic Displays*, Inv. No. 337-TA-1331, Transcript, Deposition of Chris Bolton (Feb. 23, 2023)	Filed Sealed in Its Entirety, Parties and Board Only
2017	Frank Incropera et al., FUNDAMENTALS OF HEAT AND MASS TRANSFER, at 670 (2006).	Filed Publicly
2018	European Patent Application No. 1 951 020 A210("Wellhofer")	Filed Publicly
2019	Certified translation of Japanese Patent No. 3118907 to Ohta ("Ohta")	Filed Publicly
2020	U.S. Patent No. 6,798,655 to Nagashima, et al. ("Nagashima")	Filed Publicly
2021	*Certain Outdoor and Semi-Outdoor Electronic Displays*, Inv. No. 337-TA-1331, Transcript, Deposition of Robert Smith-Gillespie (April 26, 2023)	Filed Publicly
2022	*Certain Outdoor and Semi-Outdoor Electronic Displays*, Inv. No. 337-TA-1331, Transcript, Deposition of Robert Smith-Gillespie (Feb. 20, 2023)	Filed Publicly
2023	*IP ratings*, *Int'l Electrotechnical Comm'n*, https://www.iec.ch/ip-ratings (last visited Aug. 29, 2023) ("IEC Standards")	Filed Publicly
2024	Declaration of Dr. Himanshu Pokharna ("Pokharna Dec.")	Filed Publicly
2025	Samsung White Paper: Taking the Message Outdoors (Dec. 4, 2015)	Filed Publicly
2026	Website - Samsung White Paper: Taking the Message Outdoors (Dec. 4, 2015) https://insights.samsung.com/2015/12/04/taking-the-message-outdoors-with-high-brightness-display-tech-white-paper/ (last visited Sept. 26, 2023)	Filed Publicly
2027	Respondents' Notice of Prior Art, *Certain Outdoor and Semi-Outdoor Electronic Displays*, Inv. No. 337-TA-1331 (Jan. 4, 2023).	Filed Publicly
2028	Digital Solutions for Convenience Stores, Samsung, dated 2021	Filed Publicly

Exhibit	Description	Confidentiality Designation
2029	Sung Ki Kim deposition transcript excerpts, *Certain Outdoor and Semi-Outdoor Electronic Displays*, Inv. No. 337-TA-1331 (Mar. 31, 2023)	Filed Sealed in Its Entirety, Parties and Board Only
2030	Sungsu Lee deposition transcript excerpts, *Certain Outdoor and Semi-Outdoor Electronic Displays*, Inv. No. 337-TA-1331 (Mar. 20, 2023)	Filed Sealed in Its Entirety, Parties and Board Only
2031	Wunkil Lee deposition transcript exerpts, *Certain Outdoor and Semi-Outdoor Electronic Displays*, Inv. No. 337-TA-1331 (Mar. 21, 2023)	Filed Sealed in Its Entirety, Parties and Board Only
2032	John Palmer deposition transcript excerpts, *Certain Outdoor and Semi-Outdoor Electronic Displays*, Inv. No. 337-TA-1331 (Mar. 16, 2023)	Filed Sealed in Its Entirety, Parties and Board Only
2033	U.S. Patent Application Publication No. 2006/0077636 A1 to Kim, dated Apr. 13, 2006	Filed Publicly
2034	U.S. Patent Application Publication No. 2006/0132699 A1 to Cho et al., dated Jun. 22, 2006	Filed Publicly
2035	U.S. Patent No. 7,948,575 to Oh et al., dated May 24, 2011	Filed Publicly
2036	Certified translation of Korean Unexamined Patent Application KR 10-2006-0016469 to Na, dated Feb. 22, 2006 ("Na")	Filed Publicly
2037	U.S. Patent No. 7,800,706 B2 to Kim et al., dated Sep. 21, 2010)	Filed Publicly
2038	SEITC0027754 McDonald's Outdoor DMB presentation, dated Mar. 2017	Filed Sealed in Its Entirety, Parties and Board Only
2039	Infringement Claim Chart for U.S. Patent No. 10,506,740, Samsung OH75 / OH85	Filed Publicly
2040	Samsung OH product sales spreadsheet, CX-1728C	Filed Sealed in Its Entirety, Parties and Board Only

Exhibit	Description	Confidentiality Designation
2041	SEITC0028579 Samsung Market Requirements Document, Outdoor LCD Signage, dated Apr. 23, 2021, and English translation	Filed Sealed in Its Entirety, Parties and Board Only
2042	SEITC0035224 Samsung teardown of [redacted] Outdoor 86" product, dated Mar. 24, 2016, and English translation	Filed Sealed in Its Entirety, Parties and Board Only
2043	SEITC0035259 Samsung teardown photos of [redacted] 55" product	Filed Sealed in Its Entirety, Parties and Board Only
2044	MRI-ITC-1331_0000046205 MRI Sales Detail	Filed Sealed in Its Entirety, Parties and Board Only
2045	Declaration of Alan Brand, *Certain Outdoor and Semi-Outdoor Electronic Displays*, Inv. No. 337-TA-1331 (Aug. 19, 2022)	Filed Sealed in Its Entirety, Parties and Board Only
2046	MRI-ITC-1331_0000444713 MRI Sales Detail	Filed Sealed in Its Entirety, Parties and Board Only
2047	Article – Sunlight and Solar Clearing, https://lg-mri.com/sunlight-and-solar-clearing/ (last visited Sept. 26, 2023)	Filed Publicly
2048	Letter from Chris Bolton (Vertigo Group) to Bill Dunn (MRI), dated Apr. 6, 2009	Filed Sealed in Its Entirety, Parties and Board Only
2049	Trademark and Technology License Agreement, dated Feb. 18, 2014	Filed Sealed in Its Entirety, Parties and Board Only

Exhibit	Description	Confidentiality Designation
2050	Joint Venture and Limited Liability Company Agreement, dated Jan. 8, 2014	Filed Sealed in Its Entirety, Parties and Board Only
2051	License Agreement, dated Aug. 27, 2008	Filed Sealed in Its Entirety, Parties and Board Only
2052	Confidential Agreement, dated Jan. 22, 2020	Filed Sealed in Its Entirety, Parties and Board Only
2053	Samsung Outdoor Installation Guide	Filed Publicly
2054	Claim Chart for U.S. Patent No. 10,506,740, MRI 75" & 86" Units	Filed Publicly

I. INTRODUCTION

Petitioner fails to meet its burden of establishing that claims 1-3, 5-9, 11-13, 15-18, and 20 (collectively the "Challenged Claims") of U.S. Patent No. 10,506,740 (the "'740 Patent" or "Challenged Patent") are obvious in view of the cited prior art.

Petitioner, and its expert, misread the '740 Patent and the prior art—ignoring clear disclosures of the patent, the understanding of a person of ordinary skill in the art ("POSITA"), and the basic teachings of the prior art. The Challenged Patent concerns thermal management systems for large format electronic display boards that are placed in direct sunlight or areas of high thermal load. Prior to the inventions disclosed in the Challenged Patent, existing thermal management schemes for electronic displays were either not sufficient to adequately cool the electronic display in outdoor and direct sunlight environments, or utilized air conditioning units that generated excess noise and condensation that threatened the long-term viability of the system. The Challenged Patent disclosed and claimed novel airflows and pathways, and the integration of specific thermal management devices. The combination of these elements enabled, for the first time, large format displays to be used outside in prolonged direct sunlight.

Petitioner also failed to rebut the substantial objective *indicia* of non-obviousness in its petition or in its expert's declaration, evidence of which

Samsung was indisputably aware. Using the inventions disclosed in the ’740 Patent, MRI created a novel market for outdoor electronic displays that led to MRI’s commercial success. Even Samsung recognized MRI’s thermal management systems as a “unique and impressive” solution for companies desiring to replace outdoor static poster displays with electronic display panels. After Samsung worked for over a decade to develop a successful outdoor electronic display product, Samsung obtained and tore down [redacted] integrated its features into its own product, and released a new product line that led to a dramatic increase in sales.

Collectively, the secondary considerations are entitled to substantial weight and strongly corroborate the absence of obviousness. That is particularly true here where Petitioner’s proposed combination relied on multiple modifications, all of which are undercut by operability problems they create. For at least these reasons, all Challenged Claims are patentable.

II. MRI’S INNOVATIVE THERMAL MANAGEMENT SYSTEM AND SAMSUNG’S FAILURES

A. Background of the Technology

The Challenged Patent generally describes cooling systems and methods for electronic displays that are located in areas where thermal stability of the electronic display is at risk. ’740 Patent, 1:55-57, 9:29-33. Often, such displays are located in outdoor environments, where high ambient heat and radiation from the sun create

temperatures in excess of the electronic display's normal operating range. *Id.*, 2:6-9, 2:15-16, 7:27-29. In addition to stress created by solar loading, electronic displays operating in outdoor environments must also be able to function in the areas with high pollution, dust, and humidity. *Id.*, 2:21-25.

Such outdoor and semi-outdoor electronic display systems generally comprise four main elements: structural support components, the electronic image assembly, electrical components for operating the various devices in the display system, and a thermal management system. The structural support components comprise both the external housing of the display system and the internal support elements that secure and enclose the electronic display.

Electronic image assemblies are devices that visually present static or moving images. The electronic display can consist of many different forms of electronic image assemblies, including plasma, LEDs, and LCD modules, among others. *Id.*, 5:51-57. In the case of an LCD module, an LCD stack is located forward from a backlight. Though the liquid crystal material itself can modulate light to create different images, but the liquid crystal material itself does not produce light. Instead, the liquid crystal material must be illuminated using a light source. That light source is termed the backlight. The light from the backlight is modulated pixel-by-pixel in the LCD panel to provide a color image to the viewer.

B. The ’740 Patent’s Innovative Cooling System

The ’740 Patent claims an electronic image assembly within a housing that is cooled by the flow of two separate airflows—an open loop ambient air pathway behind (and sometimes along) the rear surface of the electronic image assembly and a closed loop gas pathway around the electronic image assembly—that both pass through and exchange energy at a heat exchanger. *See* ’740 Patent at Abstract, Claim 1.

Figure 2B of the ’740 Patent shows an exemplary embodiment claimed in the ’740 Patent, with the rear surface of the electronic display housing removed and a horizontal cross-section through the product.

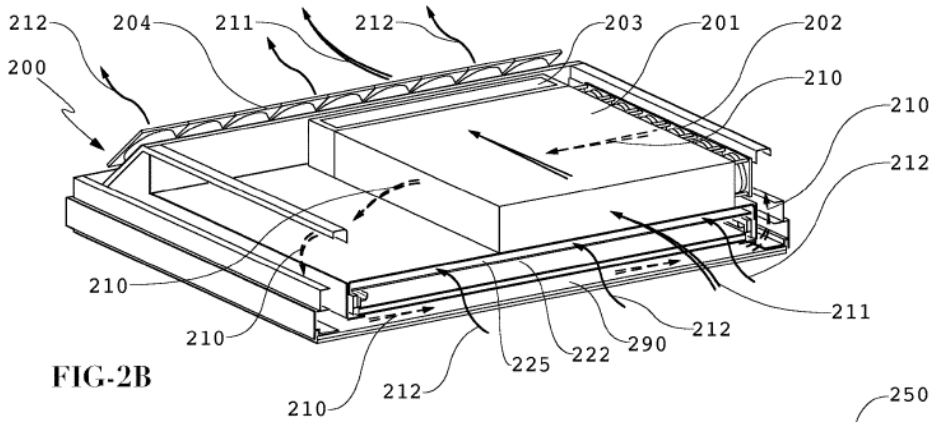

FIG-2B

As seen in Figure 2B, the cooling system includes a closed loop gas path shown by dotted lines flowing around the electronic display 220. *Id.*, 6:34-35. The closed loop gas path extends between the front surface of the electronic display and the front surface of the overall display housing. *Id.*, 7:21-34. As explained by the

’740 Patent, “[s]olar loading (radiative heat transfer from the sun[)] through the front display surface 221 may result in a heat buildup on the image assembly 80 (ex. OLED or LCD assembly).” *Id*. 7:27-30. By facilitating the airflow of circulating cooling gas through a space defined between the front glass of the electronic display and the front surface of the electronic image assembly, radiant heat incident on the face of the display is transferred by the circulated cooling gas before rather than heating the electronic image assembly. *Id.* 7:30-38.

The open loop air path shown in solid lines flows through two possible pathways: (1) through the heat exchanger 201, or (2) through a channel 225 created by the backlight assembly 222 (or rear of the electronic image assembly 220) and another surface. *Id.*, 6:35-44. The channel is created by placing a second surface 224 behind the rear surface 223 of the backlight assembly 222 (or rear surface of the electronic image assembly 220 if no backlight is used). *Id.* 6:23-30. The purpose of this “additional optional open loop channel 225” in the “space defined by the rear surface 223 of the backlight and the second surface 224” is to provide direct cooling of the backlight assembly—a significant heat source in LCD modules specifically. *Id.*

A heat exchanger is a thermal management device that facilitates increased heat transfer between the two airflows passing through the heat exchanger. *Id.*, 4:18-38. The ’740 Patent describes “many types” of fluid-to-fluid heat exchangers

that use multiple alternative channels for two different air flows (an open loop and a closed loop). *Id.* As the two air pathways flow through the alternating channels, the heat is transferred through the walls of the channels from one air system to the other. *Id.*, 4:22-38. The channels may be arranged to facilitate the airflow travelling in multiple directions: (1) parallel in the same direction ("parallel flow heat exchanger"); (2) parallel but in opposite directions ("counter-flow heat exchanger"); and (3) perpendicular direction ("cross-flow heat exchanger"). *Id.*, 4:20-23.

III. LEVEL OF SKILL IN THE ART

A POSITA would possess a bachelor's degree in a pertinent discipline, such as mechanical or electrical engineering, physics, applied physics, or a related field. Such a person would also have had 2-4 years of experience in working with electronic displays including thermal management associated with electronic displays. Alternatively, a POSITA would have had 4-6 years of experience in the field and would have developed a similar understanding of thermal management associated with electronic displays.

Petitioner proposes a POSITA definition that includes "industrial designers" as persons with ordinary skill and does not require any special experience or knowledge of a thermal management of the electronic displays. Petition at 11. Instead, under Petitioner's definition, it is sufficient that a POSITA have a

generalized knowledge of "product design issues and failure modes associate with electronic displays." *Id.* This definition is overly inclusive, and sweeps in individuals who clearly fall short of the ordinary skill necessary to ascertain the thermal management systems disclosed in the '740 Patent, including individuals who design the external housing of displays (e.g. bus shelters), electrical outlet of the display, or computer hardware. Such mechanisms are not components of the cooling system for electronic displays, which is the subject matter of the '740 Patent. '740 Patent, 1:55-57.

IV. PETITIONER'S EXPERT TESTIMONY SHOULD BE GIVEN LITTLE WEIGHT

Petitioner's expert, Smith-Gillespie, should be given little weight as his analysis contains plain errors in thermal physics and was later contradicted during deposition and at trial in the 1331 Investigation. *See Fanduel, Inc. v. Interactive Games LLC*, 966 F.3d 1334, 1343-44 (Fed. Cir. 2020); *Yorkey v. Diab*, 601 F.3d 1279, 1284 (Fed. Cir. 2010).

First, Smith-Gillespie makes basic scientific errors in his declaration. In paragraphs 186 of his Declaration, Smith-Gillespie explains that claim 7 of the '740 Patent recites "a cooling device placed near an entrance to the open loop ambient air flow path for reducing the temperature of ambient air entering the open loop ambient air flow path." Smith-Gillespie then opines that the fans 36 placed in the cooling space 20 of Karppanen are a ***cooling device for reducing the***

temperature of ambient air entering the open loop. Ex. 1002 (Smith-Gillespie Dec.), ¶189 ("The cooling fans 34 can reduce the temperature of ambient air entering the open loop ambient air flow path."). However, it is well known that a fan does not ***reduce the temperature of ambient air***. *See* Ex. 2024 at ¶¶112-13. Instead, fans merely move air within an area. If persons are standing in the pathway of air flowing out of the fan, they will feel cooler because additional air is passing by the person and convecting away heat. *Id.* The fan itself, however, does not ***reduce*** the temperature of the air that reaches the person within the fan's pathway. This simple error in physics highlights Petitioner's improper level of skill in the art and demonstrates Smith-Gillespie's lack of knowledge and experience in thermal management—especially thermal management of electronic displays.

Second, Smith-Gillespie's testimony should be given less weight because he directly contradicted himself when pressed during deposition. In his declaration, Smith-Gillespie opines that the definition of a POSITA includes an industrial designer. *See* Ex. 1002 (Smith-Gillespie Dec.) ¶39. However, when deposed in February, two months after submitting his declaration, Smith-Gillespie stated that he no longer believed that an industrial designer fell within the scope of an ordinarily skilled artisan in the field of art. *See* Ex. 2022 (Smith-Gillespie Tr. (Feb. 10, 2023)) at 73:3-7 ("Q. Okay. So an industrial designer, as we just described, would not qualify based on that educational background as a person of ordinary

skill in the art, under your definition; is that right? A. That's correct.”).

Accordingly, it is unclear what standard of a POSITA Smith-Gillespie applied in the declaration submitted with this Petition, and whether Smith-Gillespie accounted for the additional creativity needed for the lower level of skill needed by an industrial designer to satisfy the motivation to combine element of an obviousness claim. Accordingly, Smith-Gillespie’s testimony is not reliable.

V. CLAIM CONSTRUCTION

The ITC construed certain relevant terms recited by the claims of the ’740 Patent. *See* Exhibit 1028 (*Certain Outdoor and Semi-Outdoor Electronic Displays*, Inv. No. 337-TA-1331, Order 13 (May 15, 2023) (“ITC Markman Order”)). The ITC construed the claim term: “closed loop.” *Id.* at 42. There, Petitioner argued for the same construction as it argues for here “gas pathway within a display housing containing gas that is essentially isolated from external air.” *Id.* The Patent owner argued for a plain and ordinary meaning of the term.

The ITC rejected the Petitioner’s proposed construction, noting that the ’740 Patent specification specifically states that the closed loop and open loop need not be isolated from each other. *Id.* at 48. The ITC went on to “tentatively” construe “closed loop” to mean “a gas pathway forming a complete loop, within a display housing.” *Id.* at 45.

In this Response, Patent Owner has analyzed Petitioner's arguments based on the ITC construction. As the construction is "tentative," Patent Owner has also applied Petitioner's proposed construction in the alternative.

VI. PETITIONER MISREADS THE CHALLENGED PATENT

Petitioner and its expert misread the disclosures of the '740 Patent and apply an overly broad interpretation of "heat exchanger" that conflicts with the plain and ordinary meaning of that term to a POSITA. Petitioner attempts to invalidate the '740 Patent by pointing to ***any*** thermal management device that transfers heat from one source to another. However, as Dr. Pokharna testified, a "heat exchanger" is a term of art that POSITA would recognize refers to a known type of thermal management device. Ex. 2024, ¶¶61-64.

A POSITA in 2008 would read the '740 Patent claims and specification and understand that the patentee was not trying to claim ***anything that exchanges heat.*** Rather, a POSITA would understand "heat exchanger" refers to the "heat exchangers" used in thermal management schemes.

A. The proper plain and ordinary meaning of "heat exchanger" is the known device in the art of thermal management referred to as a "heat exchanger"

"Heat exchanger" has its plain and ordinary meaning. Petitioner does not offer the term "heat exchanger" for construction, and instead states that it applies the plain and ordinary meaning of that term. Petition at 17 ("[F]or the purposes of

this Petition, all other claim terms for the ’740 patent should be given their plain and ordinary meaning.”). Patent Owner agrees with the Petitioner that the term “heat exchanger” should be given its plain and ordinary meaning. The plain and ordinary meaning of heat exchanger as understood by one skilled in the art is the specific type of thermal management devices referred to as a “heat exchanger.” Ex. 2024, ¶¶61-64. *Norian Corp. v. Stryker Corp*., 363 F.3d 1321, 1326 (Fed. Cir. 2004).

The ’740 Patent specification describes a heat exchanger consistent with the understanding of a POSITA as a device that uses alternating, enclosed channels or tubes of fluid. ’740 Patent, 4:23-38. One fluid stream contains hotter fluid, and the other fluid stream contains cooler fluid. *Id.*, 4:54-56. As the fluids pass through the channels of the heat exchanger, heat is conducted from the hotter fluid stream through the channel walls to the cooler fluid stream. *Id.* These devices are described in the ’740 Patent specification and the U.S. Provisional Application No. 61/138,736 (the “’736 Provisional”), incorporated by reference. *Id.* 4:23-5:11; Ex. 2010 (’736 Provisional) at [0017]-[0018], Ex. 2024, ¶¶44-46, 61-64.

The ’736 Provisional is entitled “Heat Exchanger for an Electronic Display,” and is the first application in the ’740 Patent’s chain of priority to disclose and teach the integration of a heat exchanger. The ’736 Provisional describes the materials that the heat exchanger may be constructed from, and includes images of

its configuration to form part of the pathway of the closed and open loops. *See* Ex. 2010 ('736 Provisional), [0017]-[0018], page 4 and 5 of the images.

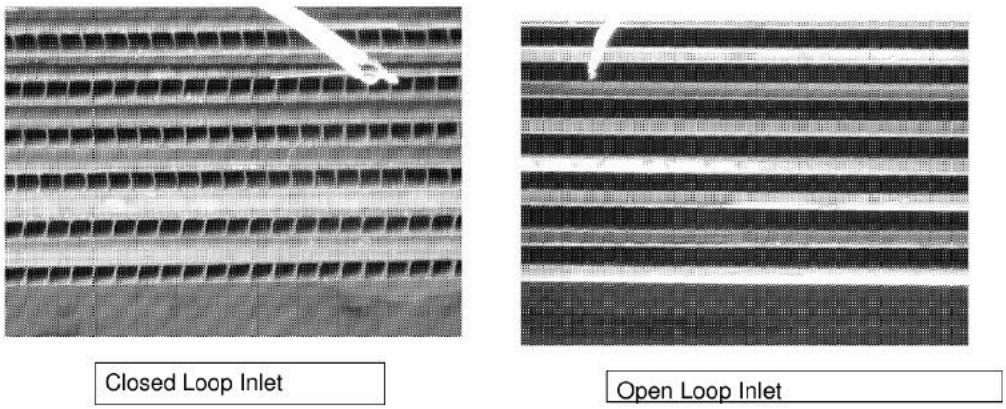

See also Ex. 2024 at ¶¶44-46.

The '736 Provisional's disclosure of a heat exchanger provides extra cooling from the finned plates described in U.S. Provisional Application No. 61/033,064 (the "'064 Provisional")—the first provisional application in the '740 Patent chain of priority. The '064 Provisional teaches transferring heat from the closed loop to the open loop with a finned wall that it refers to as "surface features 150." Ex. 2011 ('064 Provisional), [0042], Fig. 7,

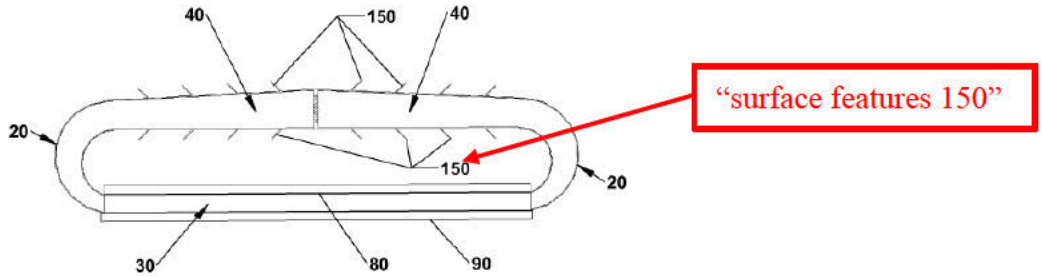

Fig. 7

The ’064 Provisional does not mention the word “heat exchanger” or anywhere describe a structure that resembles the heat exchanger device. Petitioner’s expert agrees that the ’064 Provisional Application does not describe a heat exchanger. *See* Ex. 2021 (Smith-Gillespie Tr. (April 26, 2023)) at 73:13-74:8 (explaining the surface features 150 in the ’064 Provisional “[m]ore likely, defines a heat sink,” not a heat exchanger).

In its overview of the prior art, the ’740 Patent makes it clear that the plain and ordinary meaning of “heat exchanger” does not sweep in every thermal management device that transfers heat. Ex. 2024, ¶¶60-61. In the Background section, the ’740 Patent describes prior electronic image assembly cooling systems transferred heat through walls of the enclosure using conduction and convection. ’740 Patent, 1:50-67. Such systems may have moved “heated air … into convectively thermal communication with fins.” *Id.* 2:1-2. In other words, these systems were able to transfer heat. These systems, however, could not sufficiently cool the electronic image assembly as the size of the assembly increased and the assembly was placed outdoors in direct sunlight. *Id.* 2:3-25. As part of the solution, the ’740 Patent describes the integration of a heat exchanger, a known thermal management device. *Id.*, 2:40-42, 4:23-5:11.

As Dr. Pokharna testifies, the plain meaning of “heat exchanger” to a POSITA is confirmed by thermal management texts from the time of the invention.

See generally Ex. 1020 (Dave S. Steinberg, COOLING TECHNIQUES FOR ELECTRONIC EQUIPMENT (2d ed. 1991) (distinguishing a heat sink (chapter 3 on conduction) and plates with fins (chapter 5) from a heat exchanger which contains channels for airflow (chapter 6)); Ex. 1019 (Allan W. Scott, COOLING ELECTRONIC EQUIPMENT (1974) (distinguishing forced air cooling over fins in chapter four from heat exchangers in chapter 5)); Ex. 2024, ¶¶61-64, 96. Heat exchangers are more specifically described in the dominant thermal management text used at the time of the invention. *See* Ex. 2017 (Frank Incropera et al., *Chapter 11 Heat Exchangers*, FUNDAMENTALS OF HEAT AND MASS TRANSFER, at 669-707 (2006)); Ex. 2015 (Hearing Tr. 1251:7-23) (Dr. Pokharna explaining that Incropera—the most popular thermal management text at the time of the invention—confirmed heat exchangers were known thermal management devices that had specific structural features of closed tubes or channels).

> So the heat exchanger it describes first as exchanging heat between two fluid streams that are not mixed together. And it goes on to explain various kinds of heat exchangers in the introduction itself. That is what is called a shell-and-tube heat exchanger. \
>
> You have a bank of tubes that have one fluid going through it, something, let's say, that you need to cool. And around there is the other fluid that is going around it to enhance the heat transfer without mixing these two fluids.
>
> But of particular interest here I want to mention are these two kinds of configurations that are shown here at the bottom, which are curiously similar to the structures that we saw in the '740 and '142 application.

Finally, Dr. Pokharna explained that commercial sources for thermal management devices also classify heat exchangers separately from other devices such as heat sinks, heat pipes and finned surfaces. Ex. 2024, ¶61.

B. Petitioner improperly attempts to transform a heat exchanger into anything that exchanges heat in order to sweep in prior art

Petitioner attempts to expand the meaning of "heat exchanger" to sweep in every thermal management device in existence at the time of the invention. In so doing, Petitioner ignores the disclosures of the '740 Patent specification and incorporated applications. In its overview of the '740 Patent, Petitioner states that "[a] heat exchanger can be used to 'transfer heat' from the closed loop to the open loop" and points to the rectangular casing of the heat exchanger 201 in Figure 2b and the internal multiple channel structure of the heat exchanger in Figure 4. Petition at 12-14. Petitioner entirely omits the discussion of the heat exchanger in the '740 Patent specification. *See* '740 Patent at 4:18-5:11. Nor does Petitioner address any disclosure of heat exchanger in the applications cited to and incorporated by reference in the '740 Patent—including the '736 Provisional. By ignoring these additional disclosures, Petitioner introduces ambiguity to the term where none exists.

In his Declaration, Petitioner's expert appears to understand the plain and ordinary meaning of "heat exchanger" in his overview of the field. *See* Ex. 1002 (Smith-Gillespie Dec.), ¶60-61. There, Smith-Gillespie states that "[a]ir-to-air heat

exchangers are well known both for their use in heat recovery systems in process industries and heating and cooling systems." *Id.*, ¶60. Smith-Gillespie describes heat exchangers as "devices [that] pass two separate air streams across opposite sides of a convoluted set of plates formed of thermally conductive material so that heat from the high-temperature air stream may be conducted across the separator material and absorbed by the lower temperature air stream on the other side of the separator." *Id.*, ¶61. Smith-Gillespie then goes on to identify three references that each describe heat exchangers that make use of alternating channels or tubes of fluids to transfer heat from one fluid to another. *Id.*, ¶60 (citing Ex. 1023 (Muellegeans), Ex. 1024 (Olmstead), and Ex. 1025 (Bergh)).

Despite this understanding of heat exchanger, Petitioner and its expert then assert that ***any*** device that transfers heat from one body of air to another body is a "heat exchanger" as recited in the claims. In his Declaration, Smith-Gillespie maps a heat exchanger to heat sinks (Horng and Hoffman), finned plates (Karppanen), and Peltier elements (Karpannen). Ex. 1002 (Smith-Gillespie Dec.) at ¶¶138-139, 143-44, 131-36; *see* Ex. 2024, ¶¶84-97. At one point, in an apparent attempt to reconcile his testimony regarding the prior art with his testimony of how one of skill in the art would understand the term "heat exchanger," Smith-Gillespie simply changes the definition of a heat exchanger to include ***anything*** that exchanges heat. *See also id.*, ¶123 ("The cooling element 32 is a '*common heat*

exchanger' because it is located in both the closed loop air path inside the display casing 10 … and also in the open cooling space 20 …, ***and transfers heat from the closed loop to the open loop.***") (emphasis added). This is similar to the testimony Smith-Gillespie offered at the 1331 Investigation hearing. Ex. 2014 (Hearing Tr.), 998:12-18 ("Q. What would a person of ordinary skill in the art in the 2008 time frame have understood the '740 patent to mean by 'heat exchanger'? A. I would understand it to mean a device that transfers heat from a hot source to another cold sink, if you will.").

As Patent Owner's expert, Dr. Pokharna, explained during that hearing, this interpretation is overly broad and would improperly sweep in items such as windows within the scope of a "heat exchanger." *See* Ex. 2015 (Hearing Tr.) 1252:4-18; Ex. 2024, ¶94.

Essentially, Petitioner and its expert treat "heat exchanger" as a means-plus-function limitation—a means for transferring heat—which would be governed by Section 112(6) of the Patent Act. However, Petitioner and its expert ignore the presumption that absent the language—"means for"—Paragraph 6 of Section 112 does not apply. *Williamson v. Citrix Online, LLC*, 792 F.3d 1339, 1348 (Fed. Cir. 2015). Even ***if*** Paragraph 6 applies, the Board's rules require that Petitioner say so and "identify the specific portions of the specification that describe the structure, material, or acts corresponding to each claimed function." 37 C.F.R. §

42.104(b)(3). Petitioner provided no such analysis. And even if Petitioner had, the structure for "heat exchanger" would be limited to the structures described in the specification. *Lockheed Martin Corp. v. Space Sys./Loral, Inc.*, 324 F.3d 1308, 1319 (Fed. Cir. 2003). As described above, the specification only describes the structure of the specific thermal management device referred to as a "heat exchanger," which is absent from the cited prior art.

Petitioner misreads the Challenged Patent and redefines the terms in an attempt to find and apply prior art. As a result, Petitioner fails to properly analyze the differences between the claimed invention and the prior art. Petitioner's attempt to broaden the term "heat exchanger" should be rejected, and the understanding of "heat exchanger" as confirmed by the intrinsic evidence demonstrates that "heat exchanger" refers to a specific device as explained above.

VII. PETITIONER FAILS TO SHOW THE ASSERTED PATENTS ARE OBVIOUS

The burden remains on Petitioner to demonstrate unpatentability. Petitioner fails to meet this burden because several claim elements are not obvious in view of either Karppanen or Yare, alone or in combination with the knowledge of a POSITA.

A. Karppanen in view of the knowledge of a POSITA does not render the Challenged Claims obvious.

1. Claims 1, 8, and 17: Karppanen does not render obvious a "closed loop" under Petitioner's Proposed Construction

Each challenged independent claim requires a "closed loop." Petitioner proposes a construction that "closed loop" means "essentially isolated from ambient air." The '740 Patent describes the closed loop gas is "isolated" to the extent that the "gas which travels through the closed loop" is "substantially free of contaminates and/or particulate (ex. dust, dirt, pollen, water vapor, smoke, etc.) in order to prevent an adverse effect on the image quality and damages to the internal electrical components." '740 Patent at 5:25-30. Karpannen does not teach a closed loop about the display that is essentially isolated from ambient air—or substantially free of contaminates and/or particulate. Ex. 2024, ¶¶77-83.

Karppanen is silent as to the extent to which the display casing 12—which contains the display—must be sealed against particulates and water. *Id.*, ¶¶79-82. A POSITA would look to the Ingress Protection ("IP") rating of an outdoor enclosure to understand the extent to which it is—or should be—isolated from dust and water. *Id.*, ¶78. *See* Ex. 2023 (*IP ratings*, *Int'l Electrotechnical Comm'n*, https://www.iec.ch/ip-ratings (last visited Aug. 29, 2023)). IP ratings are the industry standard for measuring and determining the amount of seal in a system. *Id.*, ¶78; Ex. 2023, IEC Standards.

The IP rating is comprised of two numbers. Ex. 2024, ¶78; Ex. 2023 (IEC Standards). The first number represents the extent to which dust can enter the system, and the second number represents the extent to which water can enter the system. Ex. 2024, ¶78; Ex. 2023 (IEC Standards). A POSITA would look to an enclosure that meets at least the level 5 for the first and second digits to know it is sealed to the extent that it is "substantially free" of dust and contaminates. Ex. 2024, ¶78; Ex. 2023 (IEC Standards). Absent a disclosure that an enclosure is rated to a level 5 IP rating, a POSITA would look for explicit statements that the enclosure is sealed from dust or sealed from water. Ex. 2024, ¶78.

Karppanen is silent as to the IP rating of the enclosure or whether dust and water can enter the system. *Id*., ¶79. At most, Karppanen makes reference to a "waterproof" display casing. *Id*., ¶79; Karppanen at Abstract. However, this disclosure alone is not sufficient as "waterproof" merely refers to the lower scale of the IP rating system (levels 2-3). Ex. 2024, ¶¶79-80. In fact, there are "weatherproof" rated devices—such as outdoor outlet protectors—that only protect against falling rain and are designed to be opened to the atmosphere, dust, and particulates. *Id*.

In one sentence, Karppanen states that the transparent front plate may be fastened to the rest of the housing by a "vibration attenuating sealing elements 50." *Id*., ¶81; Ex. 1004 (Karppanen) at 7:35-39. However, as a POSITA would know,

this is material used to protect the front transparent plate (glass) from physical force that it may encounter in outdoor settings, e.g., vibrations. Ex. 2024, ¶81. The vibration attenuating elements do not, by themself, indicate whether or to what extent the display enclosure in Karppanen is sealed against, for example, dust or ambient air.

Petitioner again misreads the prior art and states that Karppanen discloses a "closed" display casing. Petition at 30. When Karppanen uses the term "closed," it refers to the position of the casing being shut, i.e., not open for maintenance. *See, e.g.*, *id.* 7:7-11 ("In normal use, the display casing and the device are turning against each other to a ***closed*** position and locked to each other by locking means 18 on one side of the casings. In the ***closed*** position, there remains a cooling space 20 ….").

Petitioner fails to address the extent to which Karppanen's enclosure is sealed against dust or contaminates. Further, Petitioner fails to address their construction of "essentially isolated from ambient air" with regards to Karppanen at all. For this reason alone, Petitioner's analysis of its own prior art reference under its own construction fails. Further, because Karppanen does not discuss the extent to which the display casing 10 is sealed from external air, Karppanen does not teach a closed loop under Petitioner's construction of "closed loop." Thus, the Petition fails with respect to each of the Challenged Claims.

2. Claims 1, 8, and 17: Karppanen does not render obvious a "heat exchanger"

Each challenged independent claim requires a "heat exchanger." This claim element is not disclosed by Karppanen. Ex. 2024, ¶¶84-97. As explained above, the claim language and specification of the '740 Patent confirms that a POSITA would understand that the term "heat exchanger" refers to a specific device that one of skill in the art termed a "heat exchanger" and does not encompass ***any*** device that moves heat.

i. Karppanen does not describe a heat exchanger

Karppanen provides three possible thermal management devices that may be used within its enclosure to facilitate cooling: (1) a finned plate, (2) a heat sink, or (3) a thermoelectric device called a "Peltier element." *Id.*, ¶¶85-93. Karppanen generally refers to these three options as the "cooling elements 32" that span the wall 22 that separates display casing 10 from the cooling space 20. *See* Ex. 1004 (Karppanen) at Fig. 2; Ex. 2024, ¶¶85-93. The cooling elements 32 have two ends, one extending into the display casing (first heat transfer part 60) and one end extending into the cooling space 20 (second transfer part 62). Ex. 1004 (Karppanen) at Fig. 2; Ex. 2024, ¶68.

a) Cooling Elements Are a Finned Wall

Karppanen suggests that one such configuration of the cooling elements 32 is to have two sets of fins extending into each space. Ex. 1004 (Karppanen) at

8:16-22; Ex. 2024, ¶¶86-88. This configuration is seen in the top portion of Figure 2, excerpted below.

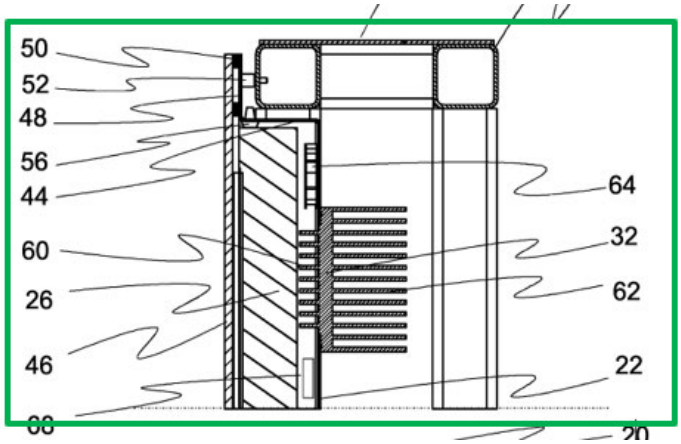

This wall with fins closely resembles the finned wall of the ’064 Provisional to which the application that led to the ’740 Patent claims priority. In particular, as shown below in Figure 7 of the ’064 Patent side by side with Figure 2 from Karppanen, the Karppanen finned wall is the same thermal transfer mechanism as the finned plate separating the closed and open loops in the ’064 Provisional. Ex. 2024, ¶¶87-88.

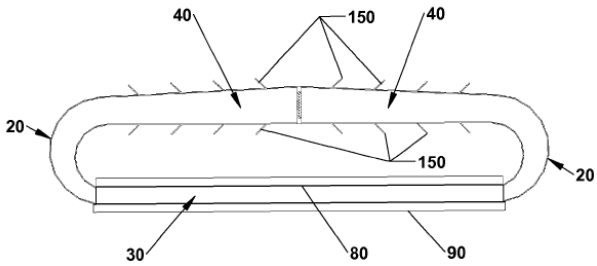

Fig. 7

Ex. 2011 (’064 Provisional)

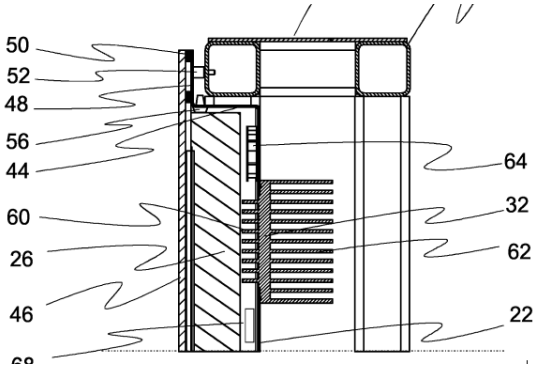

Ex. 1004 (Karppanen) at Figure 2

Petitioner's expert agrees that the finned plate at 150 in the '064 Provisional is not a heat exchanger. *See* Part VI, Ex. 2021 (Smith-Gillespie Tr. (Apr. 26, 2020)), 73:13-74:11. When confronted with the similarity between the finned wall in Karppanen with the finned wall in the '064 Provisional, Petitioner's expert attempted to explain away the difference—saying that because there are not fins on both sides of the '064 Patent plate dividing the open loop (found in the space between the backlight 80 and wall of rear cooling chamber 40) and closed loop (found in rear cooling chamber 40) shown above, there is no heat exchanger. *Id.* 74:13-3. This arbitrary distinction, which is not supported by any intrinsic evidence, is not how a POSITA would understand a heat exchanger. Instead, a POSITA would understand that Karpannen's disclosure to be similar to the finned walls described in the Background section of the '740 Patent. However, this is not a heat exchanger device as is made clear in both the specification and claim language.

b) Cooling Elements 32 Are a Heat Sink

Karppanen describes a second embodiment where the cooling elements 32 are a heat sink. Ex. 2024, ¶¶89-90. In this embodiment, the first heat transfer part 60 is attached to rear portion of the display, directly conducting heat from the display to the cooling space 20. *Id.*, ¶90; Ex. 1004 (Karppanen) at 8:30-32. This embodiment is depicted in the bottom portion of Figure 2, excerpted below.

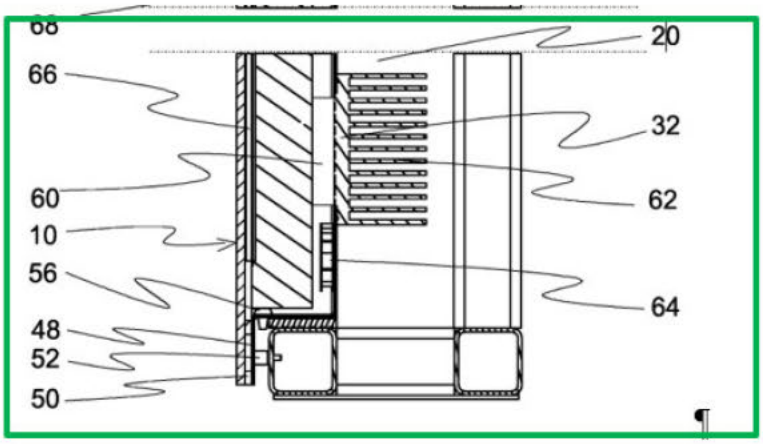

Heat sinks are thermal management devices that are distinct from heat exchangers. These two separate types of devices operate according to different principles, and have different manufacturing considerations. Ex. 2024 at ¶¶52, 61-62,103, *see also* Ex. 1020 (Steinberg) (distinguishing a heat sink (chapter 3 on conduction) and plates with fins (chapter 5) from a heat exchanger which contains channels for airflow (chapter 6)); Ex. 1019 (Scott) (distinguishing forced air cooling over fins in chapter four from heat exchangers in chapter 5). Even Petitioner's expert believes that a heat sink and heat exchanger are different devices within the understanding of the '740 Patent. Smith-Gillespie Tr. (Apr. 26, 2020), 73:22-74:4 ("Does this paragraph 42 [of the '064 Provisional] describe a heat exchanger? … A. More likely, defines a heat sink."). Thus, this embodiment of Karppanen is not a heat exchanger.

c) Cooling Elements 32 Are a Peltier Device

Karppanen describes a third embodiment where the cooling elements 32 are Peltier devices. Ex. 2024, ¶91. A Peltier device is an active heat transfer device

that pumps heat from lower temperatures to higher temperatures. *Id.* A heat exchanger, by contrast, is a passive device that conducts heat from a hotter fluid stream to a cooler fluid stream. *Id.*

Because none of the embodiments disclosed in Karpannen describe a heat exchanger device, Karppanen fails to teach a heat exchanger.

ii. Petitioner and Its Expert Argue for an Insupportably Broad Meaning of Heat Exchanger

Petitioner and its expert ask the Board to conclude that any device which transfers heat constitutes a heat exchanger. *See* Part VI; Petition at 31 ("Karppanen discloses a cooling element 32, which is a '*common heat exchanger*' because it is located in both the closed loop air path ("*the closed loop gas circulation path*') and also in the open cooling space 20 ('*the open loop ambient air flow path*'), ***and transfers heat from the closed loop to the open loop***.") (emphasis added and in original). As explained by Dr. Pokharna, skilled artisans may colloquially refer to an object that is exchanging heat as a heat exchanger. Ex. 2024, ¶96. However, the patent specification, claim language, and description of failed devices from the past make it clear that the heat exchanger claimed by the patent is more specific than a device that simply moves heat.

Faced with the reality that the heat sinks of Karppanen are not heat exchangers, Petitioner attempts to point to the Challenged Patent's prosecution history where the applicant did not critique the examiner's mapping "heat

exchanger" to a "heat sink 22" in Thielemans. Petition at 34. This silence is response to the examiner's analysis, and decision to focus on other flaws of Thielemans, would not lead a POSITA to ignore the '740 Patent specification and claim language. *Biogen, Inc. v. Berlex Labs., Inc.*, 318 F.3d 1132, 1139 (Fed. Cir. 2003) ("Representations during prosecution cannot enlarge the content of the specification, and the district court was correct in relying on the specification in analyzing the claims."); Ex. 2024, ¶96 n.1. Instead, a POSITA would conclude this was the ordinary strategic choice of an applicant in responding to a rejection, and is no way indicative that anything which exchanges heat is a heat exchanger. *DeMarini Sports, Inc. v. Worth, Inc.*, 239 F.3d 1314, 1326 (Fed. Cir. 2001) ("[J]ust as we can draw no inference from what the examiner did not say, we can draw no inference from what [the Applicant] did not argue" in its response to a rejection.).

Further, modifying Karppanen to include a heat exchanger would neither be an obvious nor a straightforward modification—especially for an industrial designer. *Id.*, ¶97. As explained by another reference cited on the face of the '740 Patent and describing a cooling system for outdoor electronic: "[S]tandard heat exchangers that work according to the air/air principle have proven to be unsuitable [for such products] due to the inflexible design of the cooling surface."). Ex. 2018 (Wellhofer) at [0005]. Wellhofer, like Karppanen, teaches the use of a finned wall to transfer energy from a display casing to a cooling space. Ex. 2024,

¶91; Ex. 2018 (Wellhofer) at [0003], [0008]. In Wellhofer, this device is referred to not as a heat exchanger, but as a heat sink. Ex. 2018 (Wellhofer) at [0008].

Because Karppanen does not disclose heat exchangers or describe the structural aspects of a heat exchanger (requiring a complicated set of channels or tubes) to directly exchange heat from one hotter fluid stream to another, Karppanen does not teach the integration of a heat exchanger into a closed and open loop system for an electronic display. Thus, the Petition fails with respect to each of the Challenged Claims.

3. Claims 1, 11, and 17: Karppanen does not render obvious "a gas circulation" or an "air circulation device" positioned to force ambient air or circulating gas "through the common heat exchanger"

Karppanen does not disclose a [gas/air] [circulation device/fan] positioned to force [gas/air] through the heat exchanger. Independent claim 1 recites:

> " a gas circulation device positioned to force circulating gas through the common heat exchanger; and
> an air circulation device positioned to force ambient air through the common heat exchanger."

Independent claim 17 contains nearly identical language, repeated below with differences in bold:

> **"at least one fan** positioned to force circulating gas through **the closed loop gas circulation path and** the common heat exchanger; and
> **at least one fan** positioned to force ambient air through **the open loop ambient air flow path and** the common heat exchanger."

These differences are insubstantial, and both claims recite and claim the channel/tube structure of a heat exchanger which facilitates the flow of fluid between the two. Ex. 2024, ¶¶98-106, 120. Similarly, dependent claim 11, which depends from independent claim 8, claims the channel/tube structure of the heat exchanger:

"the common heat exchanger includes first and second pathways, the first and second gas pathways being isolated from each other; …."

The plain language of claim 11 makes clear that the heat exchanger itself ***includes*** multiple airflow pathways. A POSITA would understand that it is not enough that the thermal management device "heat exchanger" be located in the path of the closed and loops, but would need to ***contain*** the closed and open loop itself. *Id.*, ¶¶117-18. Karppanen does not disclose a [gas/air] [circulation device/fan] positioned to force [gas/air] through the heat exchanger—or heat exchanger that includes a first and second pathway—because Karppanen does not teach the integration of any heat exchanger with the required structures for gas/air to travel through. *Id.*, ¶¶98-106.

Petitioner attempts to cure this failing by making a grammar argument that the prepositions "between" and "through" mean the same thing. Petition at 33. However, in so doing, Petitioner again misreads the Challenged Patent and ignores

the structure through which the gas/air must pass: the channels or tubes of a heat exchanger.

Again faced with the reality that Karppanen does not disclose a heat exchanger—including the channel and tube structure for two fluid pathways—Petitioner attempts to argue the cooling elements 32 could be transformed into a heat exchanger by adding a plate to the fins. *Id.* at 35. *First*, many of the references cited by Petitioner to support this transformation do not discuss heat exchangers, they discuss heat sinks. *See, e.g.*, Ex. 1006 (Hoffman) (disclosing a heat sink for conducting heat from a solid substrate); Ex. 1008 (Horng) (disclosing a heat sink attached to the back of a backlight structure). *See also*, Ex. 2024, ¶102. Dr. Pokharna explains that this modification would not only reduce the cooling capability of the system by requiring increased force generated by the fans, but would increase the cost of material and manufacturing of the enclosures. *Id.*, ¶¶103-105.

Second, Petitioner fails to show that a POSITA would know that heat exchangers could be adapted to electronic displays in a manner that would facilitate the airflow from the display casing 10 to the cooling space 20 in Karppanen. *Id.* ¶¶105-06. Karppanen is intended to be a thinner display that is modular in formation, facilitating the opening and closing of the enclosure at the wall 22 which would need to be transformed into a heat exchanger. Ex. 2024,

¶¶105-06, Ex. 1004 (Karppanen) at Fig. 3, 3:23-28. Such a modification is beyond the skill of an ordinarily skilled artisan—especially an industrial designer who is not skilled in the art of designing thermal management systems. Ex. 2024, ¶¶105-06.

4. Claims 2, 8, 13, and 17: Karppanen does not render obvious "a space defined between the rear portion of the electronic image assembly and the substantially planar surface, wherein the space is in gaseous communication with the open loop ambient air flow path"

Karppanen does not disclose a space defined between the rear surface of the electronic image assembly and a substantially planar surface for ambient air to pass through and directly cool the display. Claims 2, 8[d] and 9, and 17[e] all claim a space or channel defined between the rear surface of an electronic image assembly and "substantially planar surface" for open loop air. The differences between these claims are insubstantial, and the claim language is listed below in the table.

Claim 2	**Claim [8d] and claim 13**	**Claim [17e]**
2. The electronic display of claim 1, further comprising: a substantially planar surface located behind and spaced apart from the rear portion of the electronic image assembly; and	[8d] a substantially planar surface located behind and spaced apart from the rear portion of the electronic image assembly, the space between the substantially planar surface and the rear portion of the electronic image	[17e] a rear channel defined by a space between the rear portion of the electronic image assembly and a substantially planar surface located behind and spaced apart from the rear portion of the electronic image assembly, the rear

a space defined between the rear portion of the electronic image assembly and the substantially planar surface; wherein the space is in gaseous communication with the open loop ambient air flow path.	assembly defining a rear channel 9. The electronic display of claim 8, wherein the open loop ambient air flow path is also in gaseous communication with the rear channel.	channel forming a part of the open loop ambient air flow path;

The language of claim 2 describes ***a (singular)*** space between the rear surface of the electronic image assembly and a planar surface through which the open loop passes. "A space defined between" does not refer to ***multiple separate spaces*** that are formed between the rear surface of the electronic image assembly and a substantially planar surface somewhere remote in the enclosure. *See also Agilent Techs., Inc. v. Affymetrix, Inc.*, 567 F.3d 1366, 1376 (Fed. Cir. 2009) (finding the plain language of a claim reciting a space "'define[d]' by 'a first substrate and a second substrate having inner surfaces'" required that the "chamber be bounded by two discrete substrates" and rejecting the district court's construction that allowed a "system of enclosures" to meet the claim language).

The doctrine of claim differentiation further supports the conclusion that the channel/space must be directly formed by the rear of the electronic image assembly

and the substantially planar surface. Claim 1 of the ’740 Patent recites an open loop pathway behind the electronic image assembly, but claim 1 does not specify which structures form that open loop pathway. *See* ’740 Patent claim 1 (“an open loop ambient air flow path ***behind*** the rear portion of the electronic image assembly;”). Claim 2, which depends on claim 1, is presumed to have a narrower definition. *American Piledriving Equip., Inc. v. Geoquip, Inc.*, 637 F.3d 1324, 1335 (Fed. Cir. 2011) (affirming the application of claim differentiation to conclude that a dependent claim described narrower subject matter than the independent claim describing a similar structure). Claim 2 recites that the open loop, which is behind the electronic image assembly, must be found in ***the space*** defined between the rear surface of the electronic image assembly and a substantially planar surface. To meet claim 2’s narrower limitation, it is not sufficient that there is ***some*** space ***somewhere*** between the rear of the electronic display surface and a substantially planar surface. Otherwise, claim 2 would merely recite the same structure as claim 1’s broader “behind” language.

The ’740 Patent specification confirms that claim 2 refers to the “additional optional” open loop pathway described in the ’740 Patent as passing along the backlight of the electronic image assembly in order to directly cool the backlight. *See* ’740 Patent at 6:23-30 (“A second surface 224 may be placed behind the rear surface 223 of the backlight assembly 22. The space between the rear surface 223

of the backlight and the second surface 24 may define an additional optional open loop channel 225 through which ambient gas may travel in order to cool the backlight assembly 22 (or image assembly 220 if no backlight is used."). The second surface 224 is the "substantially planar surface" of claim 2, the rear surface 223 is the "rear portion of the electronic image assemble" of claim 2, and space between them for the additional open loop pathway is "a space defined between" the for the open loop air flow pathway of claim 2. Ex. 2024, ¶109.

Petitioner attempts to map this claim element to ***any*** space that may be located ***somewhere*** in between the rear electronic image assembly and a planar surface—regardless of how many spaces may be defined between by other more intermediate planar surfaces. For example, in its annotation of Figure 2, Petitioners map the ***cooling space 20*** to the space defined between the rear surface of the electronic image assembly and a substantially planar surface. Petition at 40.

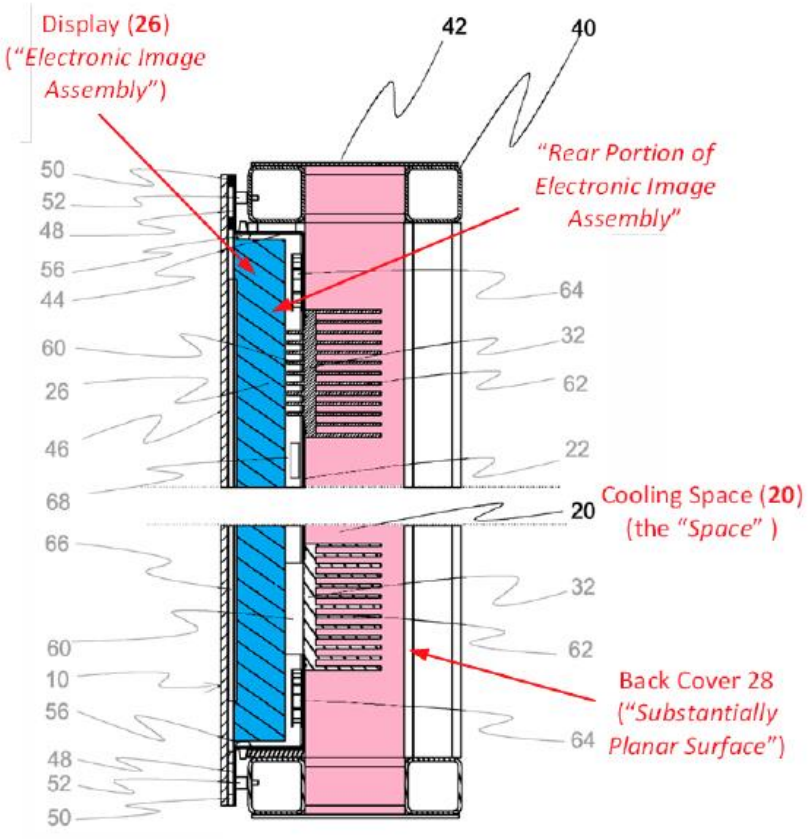

However, cooling space 20 is defined between wall 22 and back cover 28—***not*** any portion of the display (including its rear surface). In another area, Petitioner points to the Figure 1 and indicates that it believes that the entire display casing 10 is the rear portion of the electronic image assembly. *Id.* at 39.

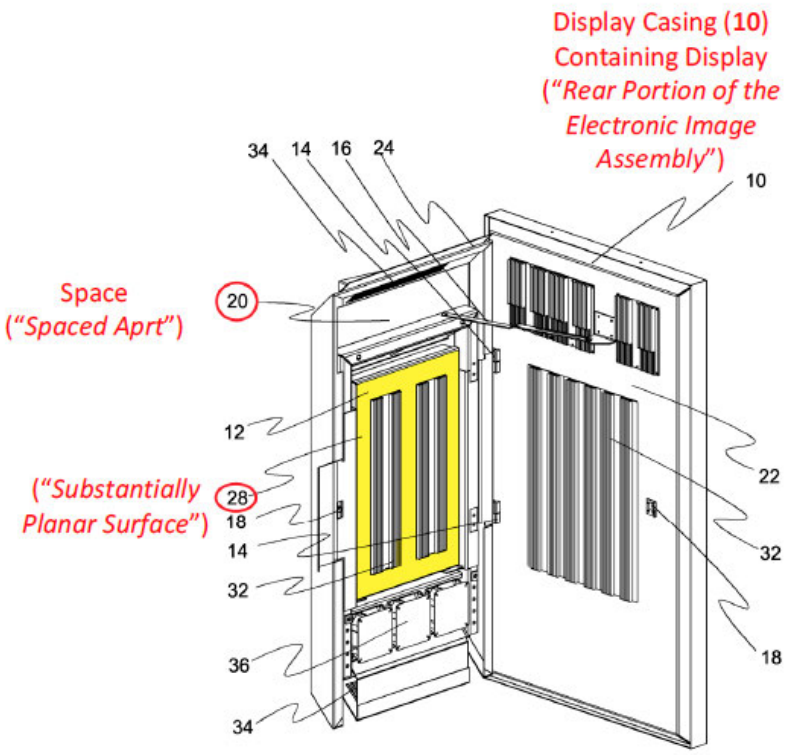

This analysis is inconsistent with Petitioner's arguments throughout the Petition that the display is ***within*** the display casing 10 and the closed loop air surrounds the display within that casing—not open loop ambient air. *See id.* at 29-30. Petitioner's analysis of this claim makes it clear that it misreads not only the Challenged Patent, but also misreads Karppanen, and makes inconsistent statements in order to meet the claim limitations. Petitioner, and its expert, thus fail to meet their burden to show this claim is met. Further, the inconsistent positions and misreading of the art also demonstrate that Petitioner has failed to meet the burden of showing other claim limitations—whose analysis is contradictory to claims 2, 9, and 17[e]—have been met.

B. Yare in view of the knowledge of a POSITA does not render the Challenged Claims obvious.

1. Claim 1, 8, and 17: Yare does not render obvious a "a closed loop gas circulation path about the electronic image assembly"

Independent claim 1 recites a "a closed loop gas circulation path above the electronic image assembly." Independent claims 8 and 17 recite the same limitation using substantially similar language: "a closed loop gas circulation path encircling the electronic image assembly." In all three limitations, the claim requires that the closed loop pathway travel around the electronic image assembly.

Yare does not disclose any information regarding the electronic display from which a POSITA could conclude there is an airflow pathway within the product that travels fully around the electronic image assembly. Further, in all Figures, Yare shows the electronic display abutting the front cover of cabinet 10. Thus, there ***cannot*** be airflow traveling around the electronic display itself. Accordingly, Yare fails to disclose a closed loop gas circulation path ***about/encircling*** the electronic image assembly. In an attempt to reach the claim limitations of the '740 Patent, Petitioner misreads Yare and draws in missing elements in self-serving locations. The Board should reject Petitioner's interpretation as it is based on a faulty analysis of Yare and hindsight rationalization.

i. Yare Is Silent as to the Form of Electronic Image Assembly Cooling System Within the Electronic Display

The ’740 Patent refers to a fully formed display product—including its housing and internal cooling system as an “electronic display.” *See, e.g.*, ’740 Patent at 3:16-18 (“FIG. 1 shows the rear of an embodiment for an electronic display 100, where the rear cover for the display housing has been removed in order to show the internal components.”). The ’740 Patent refers to the flat panel within the electronic display and the “electronic image assembly.” *Id.*, 5:51-57 (“As discussed above, the image assembly 220 may comprise any form of electronic image assembly for generating an image, including but not limited to: LCD, light emitting diode (LED), organic light emitting polymers (OLED), field emitting diode (LED), light emitting polymers (LEP), plasma displays, and any other flat/thin panel displays.”). This hierarchy of structure—electronic display being the entire product and electronic image assembly being the panel—is recited in the claims of the ’740 Patent. *See, e.g.*, claim 1 (“An ***electronic display*** comprising: an ***electronic image assembly*** having a front portion and a rear portion; ….”) (emphasis added).

The Yare cabinet is intended to hold a fully configured electronic display 20 product in a manner that would allow that display to survive in public locations without being harmed by dust or contaminates. Ex. 2024, ¶69, Ex. 1005 (Yare) 1:8-23; 5:17-27. Yare is not specific as to what kind of electronic display is to be

used in the cabinet—and states it could be any form of electronic display. *Id.*, 3:17-20 (naming as examples "a plasma display, an LCD, a TFT display, a CRT display, a LED display, a projector or a rear projection display"). Each of the kinds of electronic display products named by Yare contain a different and unique configuration and cooling system. Ex. 2024, ¶130. In fact, the configuration of just one type of display, such as an LCD display, can vary from brand to brand, and even model to model within that brand. *Id*. Yare is silent as to the electronic display product configuration, or whether that display has a front cover glass, or whether that cover glass is located forward of the display panel in order to facilitate air flow between the two. *Id*.

Further, in all Figures, Yare shows that electronic display 20 (shown in green) abuts the front of cabinet 10 (shown in blue). *See, e.g.*, Ex. 1005 (Yare), Fig. 4 (annotated).

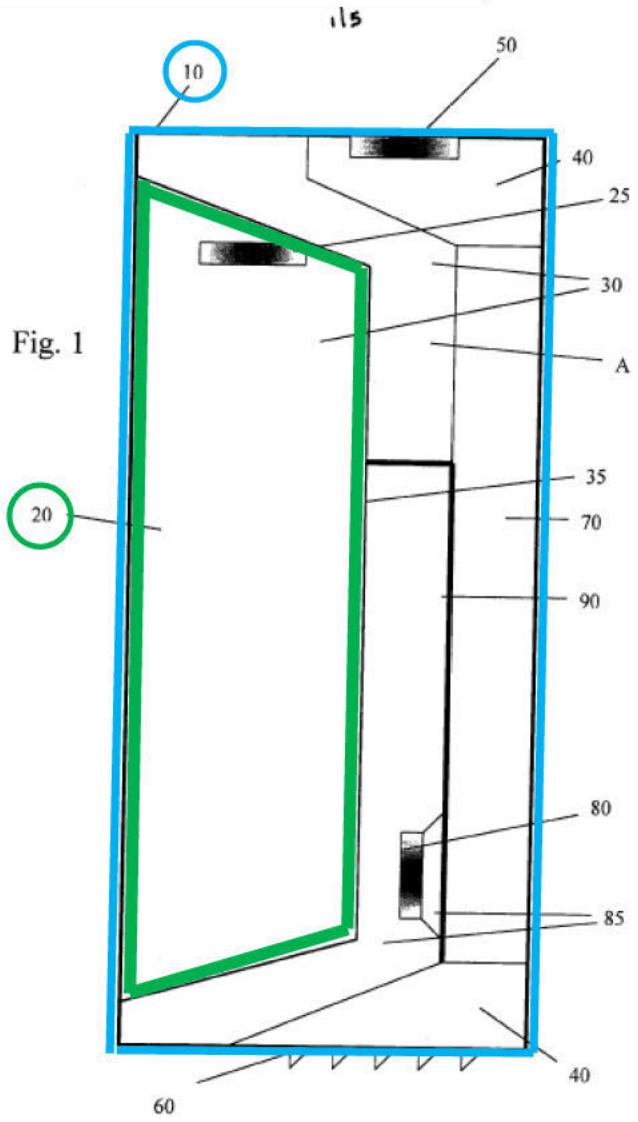

Fig. 1

See also id. Figs. 2-4, 6 (Figure 5 does not depict the display 20 or cabinet 10, and only depicts a zoomed depiction of heat exchanger 70). Thus, cooling closed loop air cannot be traveling between the front of the electronic display and the front of cabinet 10. Ex. 2024, ¶¶127-29. Further, the claim language requires the closed loop to be traveling around the **electronic image assembly**, not the **electronic display.**

Yare does not describe any details regarding where the electronic image assembly may be located within the display 20, if an electronic image assembly is present at all (Yare describes the display may also be electronic products that do not contain an electronic image assembly—such as a light projector). Ex. 1005 (Yare), 3:17-20; Ex. 2024, ¶¶129-32. As discussed above, the location of the electronic image assembly, and its orientation to the front of the display, will be different from panel type to panel type, brand to brand, and model to model. Ex. 2024, ¶130. Yare does not concern or describe the unique cooling systems for any of those displays. *Id.* Instead, Yare merely states that the display 20 is located within the sealed zone 30, and that air within the sealed zone cools the display 20 by "[v]ents or other ventilation means (not shown) [that] allow air to travel through the rear portion 35 o the display 30." Ex. 1005 (Yare) at 4:4-9.

ii. Petitioner and Its Expert Misread Yare

Petitioner and its expert confuse the display system 20—which is an electronic display—with an electronic image assembly. Both Petitioner and its expert arbitrarily add a blue rectangle to the images of Yare, which purport to show a position of the display 20. But no such rectangle is found in Yare's figures.

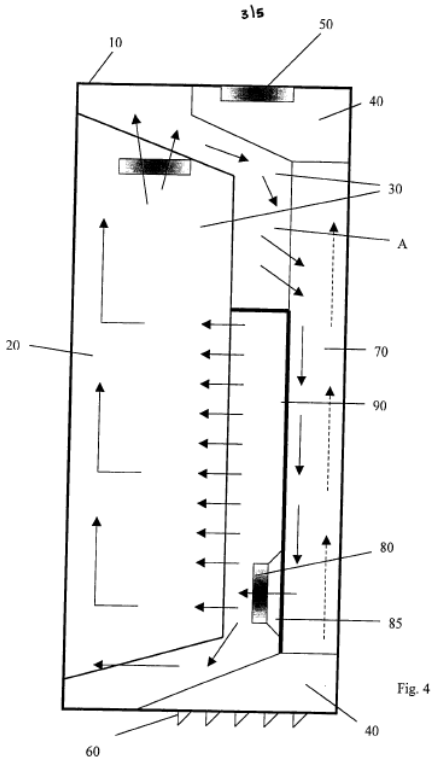

Figure 4 in Yare

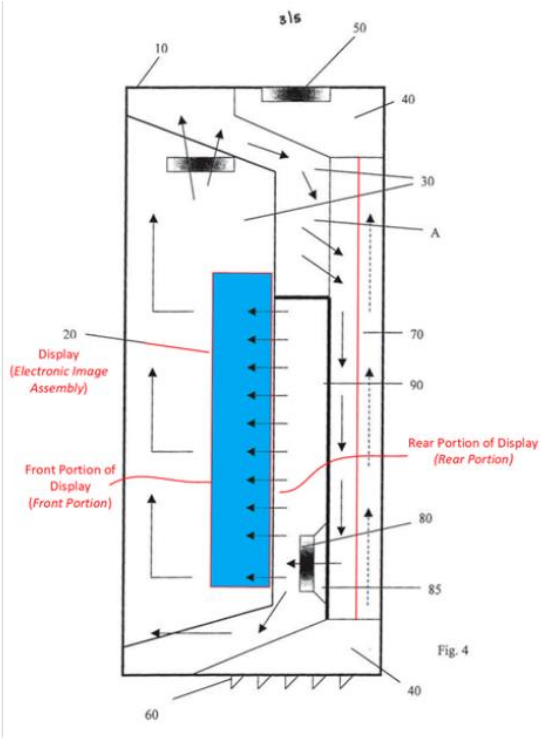

Figure 4 as Annotated by Petitioner

There is thus no support for Petitioner's faulty conclusion that the arrows show a closed loop channel between a front glass surface and the electronic image assembly. Petition at 81, Smith-Gillespie Dec., ¶272. Yare itself shows no such front panel, and to place one in Petitioner's self-serving location, the Petitioner is forced to modify Yare without any support or explanation for why a POSITA would place the display in that position.

Petitioner's statement that display 20 "is not actually illustrated in Figure 4" is incorrect. *See* Petition at 81. All Figures, except for Figure 5 which only shows a zoomed in perspective of the heat exchanger, show the display 20 with an arrow indicated that area that it occupies within sealed zone 30. *See* Ex. 1005 (Yare),

Figs. 1-4, 6. Petitioner misreads Yare, confusing display 20 with an LCD—a form of electronic image assembly—and draws in an electronic image assembly in self-serving location. Petition at 81. Petitioner then argues that this is "seemingly the best, if not the only" place where the LCD module would be located. *Id.* To support this statement, Petitioner points to the L-shaped arrows, the possibility of fog, Larson, and the conclusion that this would facilitate cooling of the electronic image assembly. *Id.* at 81-82.

First, the L-shaped arrows only show that the sealed zone air is forced by fans and pressure gradients through the electronic display 20's built in cooling system. Ex. 2024, ¶129; Ex. 1005 (Yare), 4:24-27. The L-shaped arrows do not convey any information regarding the actual cooling system's configuration, or whether air travels around the electronic display in that system.

Second, fog is an issue *created* by placing a hot panel spaced apart from a front cover glass. It is not a problem *solved* by such configuration. For example, Wellhofer—another reference discussing electronic display products—discusses the issue with fog generated by a gap between the front cover glass and hot display surface. Ex. 2018 (Wellhofer) at [0033] (stating the solution was to add an additional plate 31 rear of the backlight in order to create a uniform flow of air that prevents fogging on the front surface); Ex. 2024, ¶135.

Third, Larson describes multiple "conventional" configurations of an LCD stack and front cover glass—some of which have the LCD stack bonded to the front cover glass or configured to have an index matching medium—such as oils—in the space between the front glass and the LCD stack. *See Id*., ¶133, Ex. 1010 (Larson), 1:39-46; 3:61-4:8.

Finally, Petitioner's assertion that allowing airflow between the electronic image assembly and the front of the electronic display is nothing more than hindsight—citing the benefits disclosed in the '740 Patent as a motivation to arrive at the claimed configuration. '740 Patent, 7:27-34.

Petitioner's confused analysis of Yare renders its analysis of this claim limitation, and all other analysis of airflows within the cabinet 10, flawed and unreliable. A proper reading of Yare makes it clear that there is no information regarding how air flows within the electronic display 20 in the sealed zone, and whether the display 20 is configured to allow sealed zone 30 air from traveling "around" the front electronic image assembly within the display.

2. Claim 1, 11, and 17: Yare does not render obvious "a gas circulation" or an "air circulation device" positioned to force ambient air or circulating gas through the common heat exchanger.

Yare does not disclose a gas/air circulation device/fan positioned to force gas/air through the heat exchanger. As explained above with reference to Karppanen, independent claim 1 recites:

> "a gas circulation device positioned to force circulating gas through the common heat exchanger; and
> and an air circulation device positioned to force ambient air through the common heat exchanger."

Independent claim 17 contains nearly identical language, repeated below with differences in bold:

> **"at least one fan** positioned to force circulating gas through **the closed loop gas circulation path and** the common heat exchanger; and
> **at least one fan** positioned to force ambient air through **the open loop ambient air flow path and** the common heat exchanger."

These differences are insubstantial, and both claims recite and claim the channel/tube structure of a heat exchanger which facilitates the flow of fluid between the two. Ex. 2024, ¶¶137, 159. Dependent claim 11, which depends from independent claim 8, similarly claims the channel/tube structure of the heat exchanger:

"the common heat exchanger includes first and second pathways, the first and second gas pathways being isolated from each other; …."

The plain language of claim 11 makes it clear that the heat exchanger itself ***includes*** the multiple airflow pathways. A POSITA would understand that it is not enough that the thermal management device "heat exchanger" be located in the path of the closed and loops, but would need to ***contain*** the closed and open loop itself. *Id.*, ¶118. Further, a POSITA would understand that this language refers to the tube and channel structure created by the integration of a heat exchanger into

airflow pathways. At most, Yare only discloses a heat exchanger forming part of the sealed zone 30 pathway. *Id.*, ¶¶137-142. Accordingly, Yare does not disclosed a heat exchanger that forms part of ***both*** the open loop and closed loop pathway. *Id*.

Yare discusses a heat exchanger 70 located at the boundary of the sealed zone 30 and atmospheric zone 40. *Id.*, ¶138; Ex. 1005 (Yare), at Fig. 6. That heat exchanger is a corrugated structure that is mounted to a baffle plate 90. *See* Ex. 1005 (Yare) at Fig. 6.

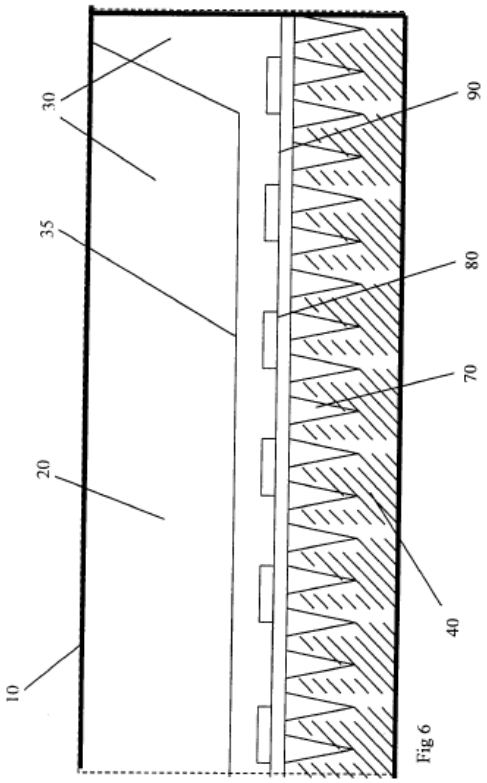

Baffle plates are structures typically found in heat exchangers that hold channels of tubes together. Ex. 2024, ¶140. Baffle plates do not by themselves

constitute a heat exchanger; they do not create the channels or tubes of the heat exchanger. *Id*. Even *if* the baffle plate 90 was coextensive with the entire sealed zone 30, creating channels with the corrugated structure of heat exchanger 70, the channels are only on the sealed zone 40 side of the heat exchanger. *Id.* ¶¶138-39. There are no channels or pipes created on the atmospheric size of the heat exchanger—as required by the claim language. *Id.* ¶¶137-39.

Faced with this inadequacy of Yare, Petitioner argues that a POSITA would know that adding a heat exchanger with multiple channels would be a straightforward modification and would be motivated to make the modification. Petition at 90-92. In support of this contention, Petitioners point to Bundza as evidence of the knowledge of a POSITA. *Id.* However, Bundza does not represent the understanding of a POSITA because it is a reference from an entirely different field—telecommunications units. Ex. 2024, ¶141; Ex. 1011 (Bundza) at 1:10-13. Further, the evidence shows that such modifications were not simple, and required re-working of the electronic display that would have been beyond the skill of a POSITA. *See* Ex. 2024, ¶¶141-42; Ex. 2018 (Wellhofer) at [0005]. ("[S]tandard heat exchangers that work according to the air/air principle have proven to be unsuitable due to the inflexible design of the cooling surface.").

3. Claims 5 and 17: Yare does not render obvious "a front display surface spaced apart from the front potion of the electronic image assembly" and a "front channel defined by

[that] channel' that "form[s] part of the closed loop gas circulation path"

Yare is silent as to airflow between the front glass surface of an electronic display and an electronic image assembly. Claim 5 recites:

> a front display surface spaced apart from the front portion of the electronic image assembly; and
>
> a front channel defined by the space between the front display surface and the front portion of the electronic image assembly, the front channel forming part of the closed loop gas circulation path.

Claim 17[d] recites the same limitation using substantially similar language:

> a front channel defined by a space between a front portion of the electronic image assembly and a front display surface located forward of and spaced apart from the front portion of the electronic image assembly, the front channel forming a part of the closed loop gas circulation path; ….

As discussed above in Part VII.B.1, Yare does not disclose any information regarding the electronic display from which a POSITA could conclude there is an airflow pathway within the product that travels between any front display surface and the front of the electronic image assembly surface. The only instruction provided by Yare is that the air within the sealed zone should be pressurized before entering the display 20's built in cooling system in order to promote the efficiency of whatever built in cooling system is located within that product. *See* Ex. 1005 (Yare) at 5:15-16 ("[E]xisting air in the pressure zone 85 is forced through vents in the rear portion 35 of the display 20. The air circulates around the display 20, aided by a standard internal cooling system of the display 20…. The air heated by hot

components as it circulates, and is drawn upwards by the fans 25 within the display unit and blown out of the rear portion 35 [of display 20] for the cycle to continue.”).

Further, in all Figures, Yare shows the electronic display abutting the front cover of cabinet 10. Thus, there ***cannot*** be airflow traveling between the front of the electronic display 20 and the front cover of cabinet 10. Accordingly, Yare fails to disclose and front channel defined between the front portion of the electronic image assembly and the front electronic display surface and cannot render the claims obvious.

4. Claims 2, 8, 13, and 17: Yare does not render obvious “a space defined between the rear portion of the electronic image assembly and the substantially planar surface, wherein the space is in gaseous communication with the open loop ambient air flow path”

Yare does not disclose a space defined between the rear surface of the electronic image assembly and a substantially planar surface for ambient air to pass through and directly cool the display. Claims 2, 8[d] and 9, and 17[e] all claim a space or channel defined between the rear surface of an electronic image assembly and “substantially planar surface” for open loop air. The differences between these claims are insubstantial, and the claim language is listed below in the table.

Claim 2	Claim [8d] and claim 13	Claim [17e]

2. The electronic display of claim 1, further comprising: a substantially planar surface located behind and spaced apart from the rear portion of the electronic image assembly; and a space defined between the rear portion of the electronic image assembly and the substantially planar surface; wherein the space is in gaseous communication with the open loop ambient air flow path.	[8d] a substantially planar surface located behind and spaced apart from the rear portion of the electronic image assembly, the space between the substantially planar surface and the rear portion of the electronic image assembly defining a rear channel 9. The electronic display of claim 8, wherein the open loop ambient air flow path is also in gaseous communication with the rear channel.	[17e] a rear channel defined by a space between the rear portion of the electronic image assembly and a substantially planar surface located behind and spaced apart from the rear portion of the electronic image assembly, the rear channel forming a part of the open loop ambient air flow path;

As explained above in Part VII.A.4 (repeated here to avoid the need to refer back), the language of claim 2 describes ***a (singular)*** space between the rear surface of the electronic image assembly and a planar surface through which the open loop passes. "A space defined between" does not refer to ***multiple separate spaces*** that are formed between the rear surface of the electronic image assembly and a substantially planar surface somewhere remote in the enclosure. *See also Agilent Techs., Inc. v. Affymetrix, Inc.*, 567 F.3d 1366, 1376 (Fed. Cir. 2009)

(finding the plain language of a claim reciting a space "'define[d]' by 'a first substrate and a second substrate having inner surfaces'" required that the "chamber be bounded by two discrete substrates" and rejecting the district court's construction that allowed a "system of enclosures" to meet the claim language).

The doctrine of claim differentiation further supports the conclusion that the channel/space must be directly formed by the rear of the electronic image assembly and the substantially planar surface. Claim 1 of the '740 Patent recites an open loop pathway behind the electronic image assembly, but claim 1 does not specify which structures form that open loop pathway. *See* '740 Patent claim 1 ("an open loop ambient air flow path ***behind*** the rear portion of the electronic image assembly;"). Claim 2, which depends on claim 1, is presumed to have a narrower definition. *American Piledriving Equip., Inc. v. Geoquip, Inc.*, 637 F.3d 1324, 1335 (Fed. Cir. 2011) (affirming the application of claim differentiation to conclude that a dependent claim described narrower subject matter than the independent claim describing a similar structure). Claim 2 states that the open loop, which is behind the electronic image assembly, must be found in ***the space*** defined between the rear surface of the electronic image assembly and a substantially planar surface. To meet claim 2's narrower limitation, it is not sufficient that there is ***some*** space ***somewhere*** between the rear of the electronic display surface and a substantially

planar surface. Otherwise, claim 2 would merely recite the same structure as claim 1's broader "behind" language.

The '740 Patent specification confirms that claim 2 refers to the "additional optional" open loop pathway described in the '740 Patent as passing along the backlight of the electronic image assembly in order to directly cool the backlight. *See* '740 Patent at 6:23-30 ("A second surface 224 may be placed behind the rear surface 223 of the backlight assembly 22. The space between the rear surface 223 of the backlight and the second surface 24 may define an additional optional open loop channel 225 through which ambient gas may travel in order to cool the backlight assembly 22 (or image assembly 220 if no backlight is used."). The second surface 224 is the "substantially planar surface" of claim 2, the rear surface 223 is the "rear portion of the electronic image assemble" of claim 2, and space between them for the additional open loop pathway is "a space defined between" the for the open loop air flow pathway of claim 2. Ex. 2024, ¶145.

Petitioner attempts to map this claim element to ***any*** space that may be located somewhere in between the rear electronic image assembly and a planar surface—regardless of how many spaces may be defined between by other more intermediate planar surfaces. For example, Petitioner maps the rear most surface of cabinet 10 to the "substantially planar surface." *See* Petition at 95 (annotating Fig. 4 of Yare).

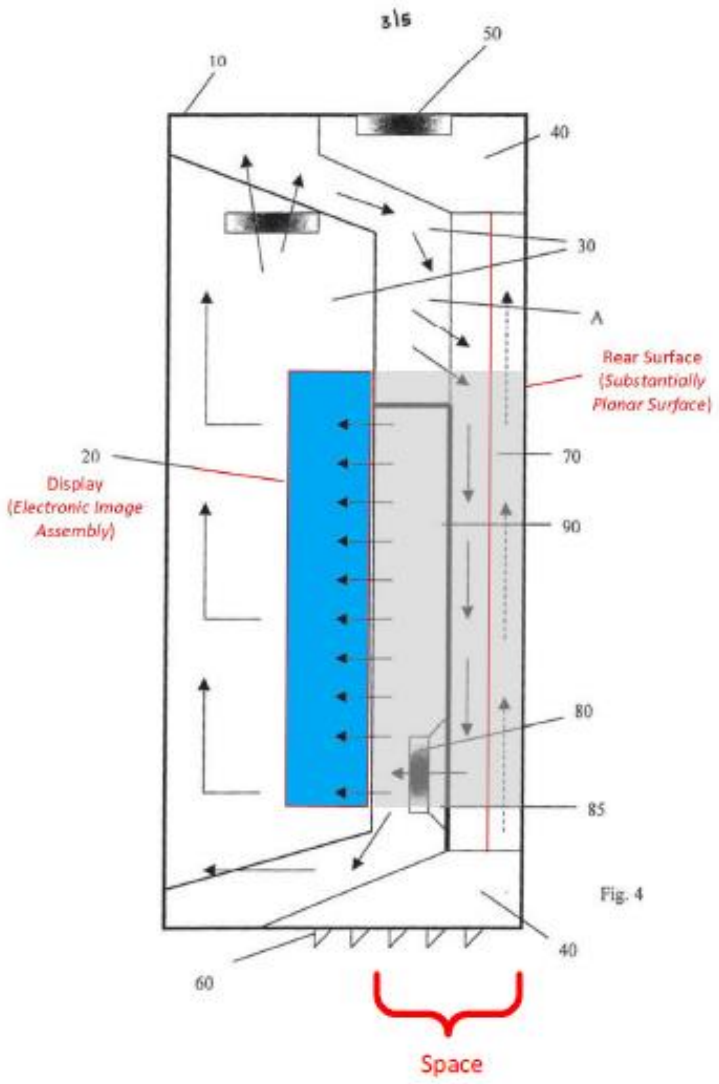

Petitioner then points to the rear surface of the electronic image assembly that it self-servingly drew in to the Figure. *Id.* Petitioner then states that all of the spaces that exist behind that electronic image assembly constitute ***the*** space defined between that electronic image assembly and the substantially planar surface. *Id.* As explained before, this is not how a POSITA would understand the language describing a space defined between the rear electronic display image and a substantially planar surface.

Further, as explained before, Yare does not disclose any information regarding the electronic image assembly—if any—within electronic display 20, and what structures that may be located immediately behind that display to form a channel. Regardless, that electronic image assembly would be located entirely within the display 20, which is located entirely within the sealed zone 30, and any open loop or ambient air would not be able to travel in a channel defined by the rear surface of the electronic image assembly. Ex. 2024, ¶¶146-47.

Petitioner's analysis of this claim makes it clear that it misreads not only the Challenged Patent, but also misreads Yare, and makes inconsistent statements in order to meet the claim limitations. Petitioner, and its expert, thus fail to meet their burden to show this claim is met. Further, the inconsistent positions and misreading of the art also show Petitioner has failed to meet the burden of showing other claim limitations—whose analysis is contradictory to claims 2, 9, and 17[e]—has been met.

VIII. OBJECTIVE INDICIA SHOW THE NON-OBVIOUSNESS OF THE CHALLENGED CLAIMS.

"The objective indicia analysis is … a fundamental part of the overall § 103 inquiry." *Liqwd, Inc*., 941 F.3d at 1137 (Fed. Cir. 2019) (citation omitted). It is an essential safeguard that protects against hindsight bias. *In re Cyclobenzaprine Hydrochloride Extended-Release Capsule Pat. Litig*., 676 F.3d at 1079. Objective evidence "may often establish that an invention appearing to have been obvious in

light of the prior art was not." *Transocean Offshore Deepwater Drilling, Inc. v. Maersk Drilling USA, Inc*., 699 F.3d 1340, 1349 (Fed. Cir. 2012). In fact, "[i]t is the secondary considerations that are often most probative and determinative of the ultimate conclusion of obviousness or nonobviousness." *Pro-Mold & Tool Co. v. Great Lakes Plastics, Inc*., 75 F.3d 1568, 1573 (Fed. Cir. 1996).

Samsung asserts that the challenged claims would have been obvious in 2008, but the real-world evidence shows that, despite its expertise and enormous resources, Samsung was not able to develop a successful outdoor LCD display for over ***ten years*** and then achieved remarkable commercial success immediately after adopting MRI's innovative approach.

A. There is a Nexus to Both Samsung and MRI Products

"For objective evidence ... to be accorded substantial weight, its proponent must establish a nexus between the evidence and the merits of the claimed invention." *In re Kao*, 639 F.3d 1057, 1068 (Fed. Cir. 2011) (emphasis & citation omitted). In an *inter partes* review, when the patent owner shows the claimed invention is embodied in a particular product, nexus between the secondary considerations associated with that product and the patent claims is presumed. *PPC Broadband, Inc. v. Corning Optical Commc'ns RF, LLC*, 815 F.3d 734, 747 (Fed. Cir. 2016); *see also Omron Oilfield & Marine Inc. v. MD/TOTCO*, IPR2013–00265, Paper 11 at 12 (PTAB Oct. 31, 2013).

Such nexus is established here, as discussed below, because both the MRI displays and the Samsung's copy-cat design, practice the claims of the '740 Patent.

B. Samsung's Long Felt Need, Failure, and Copying

Around the early 2000s, larger LCDs of 32-inches and above began to appear in the market. Those larger display screens faced new thermal challenges, particularly when used in an outdoor environment. *See, e.g.*, Exs. 2025-2026, 2038, 2047. Samsung itself explains that companies had "wanted their messages outdoors" but "were challenged by a variety of issues during the early years." Ex. 2025, at 3, 6 (touting the benefits of digital outdoor displays); *see* Ex. 2026 (publication of white paper in 2015). "The biggest obstacle was heat—from inside and from the sun. Direct sunlight and its amplified heat could alter the properties of LCD crystals—the display layer of screens—and discolor or cause black blotches." Ex. 2025, at 3. Samsung admits that the harsh outdoor environment posed "***enormous engineering challenges***." Ex. 2025, at 2 (emphasis added).

Years of research efforts were undertaken by Samsung and others in the electronic display industry to address the enormous thermal challenge. Despite these efforts, Samsung failed to identify an effective solution. Samsung holds itself out as a "Leader in Innovation," with "$15.6B Invested in R&D" and as the "#2 Patent Holder in US." Ex. 2028, at 4 (Samsung marketing touting its "History of Success" manufacturing "top-of-the-line" displays and expertise in advancing the

field of digital signage). Samsung is undoubtedly an industry leader, yet failed repeatedly in its effort to develop outdoor LCD displays. *See In re Cyclobenzaprine Hydrochloride Extended-Release Capsule Patent Litig*., 676 F.3d 1063, 1081 (Fed. Cir. 2012).

Samsung began its outdoor LCD display development starting at least by 2005—three years before MRI's priority date—and filed numerous patent applications on thermal management systems between 2004 and 2008. Ex. 2029 (Sung Ki Kim Dep. Tr.), 45:22-46:11; Ex. 2033; Ex. 2034; Ex. 2035; Ex. 2036; Ex. 2037; *see* Ex. 2027 (Samsung's ITC listing of 13 pages of prior art). Despite its extensive R&D efforts at the time of MRI's invention, Samsung was not able to introduce an actual display product to the market. Ex. 2029 (Sung Ki Kim Dep. Tr.), 46:7-15.

Former Samsung engineer Sung Ki Kim testified that Samsung's first outdoor display was not launched until the 2010 to 2012 timeframe, and even then, Samsung resorted to using air-conditioning to provide cooling. Ex. 2029 (Sung Ki Kim Dep. Tr.), 46:16-47:22. Samsung continued to try to develop effective convective cooling systems and finally introduced its OHD product in 2013-2015. Ex. 2029 (Sung Ki Kim Dep. Tr.), 49:9-17. The OHD product also proved to be a failure because the "generated heat, was not being taken out well" resulting in a rise in temperature and "[redacted]." Ex. 2029 (Sung Ki

Kim Dep. Tr.), 51:1-9. It was not until after a ***decade of failures*** between 2005 and 2015 that Samsung finally launched its OHF product line that MRI accused of infringement in the co-pending ITC investigation. Ex. 2029 (Sung Ki Kim Dep. Tr.), 53:1-4.

Samsung's 75- and 85-inch OHF and subsequent products practice claims 1, 5, and 6 of the '740 Patent. Ex. 2024, ¶¶186-87. These Large-Sized Products were shown to infringe in the co-pending ITC investigation, as set forth in the claim charts. Ex. 2039. The schematic below shows the configuration and air flow paths of Samsung's Large-Format products. The products include an electronic image assembly (an LCD) having a front and a rear side. An open loop of ambient air passes through a heat exchanger located behind the rear of the display. A closed loop of gas circulates around the display, passing through the heat exchanger, then over the top of the display, then through a channel between the front of the display and the cover glass, then around the bottom of the LCD, and finally along the rear surface of the display back to the heat exchanger. A common heat exchanger is located in the pathway of both the closed and open loops. The heat exchanger has fans (including motors) that force the open loop and the closed loop through the heat exchanger where the ambient air in the open loop cools the heated air in the closed loop. Ex. 2024, ¶¶186-87. Accordingly, the Large-Format Displays both practice and are coextensive with the claims of the '740 Patent .

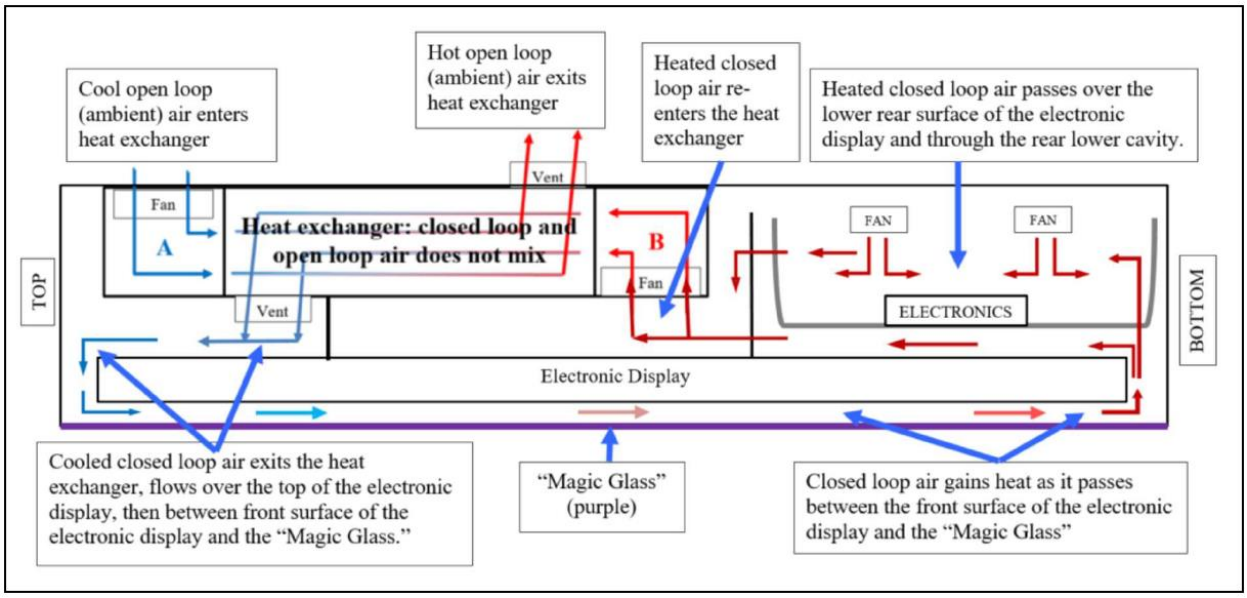

Samsung's manuals confirm the ambient air flow through the heat exchangers, entering at the top of the unit and exiting near the center of the unit. Ex. 2053 (Samsung Outdoor Installation Guide) ("The outdoor unit uses cooling fans to take in outside air to lower the internal temperature and discharge the hot air").

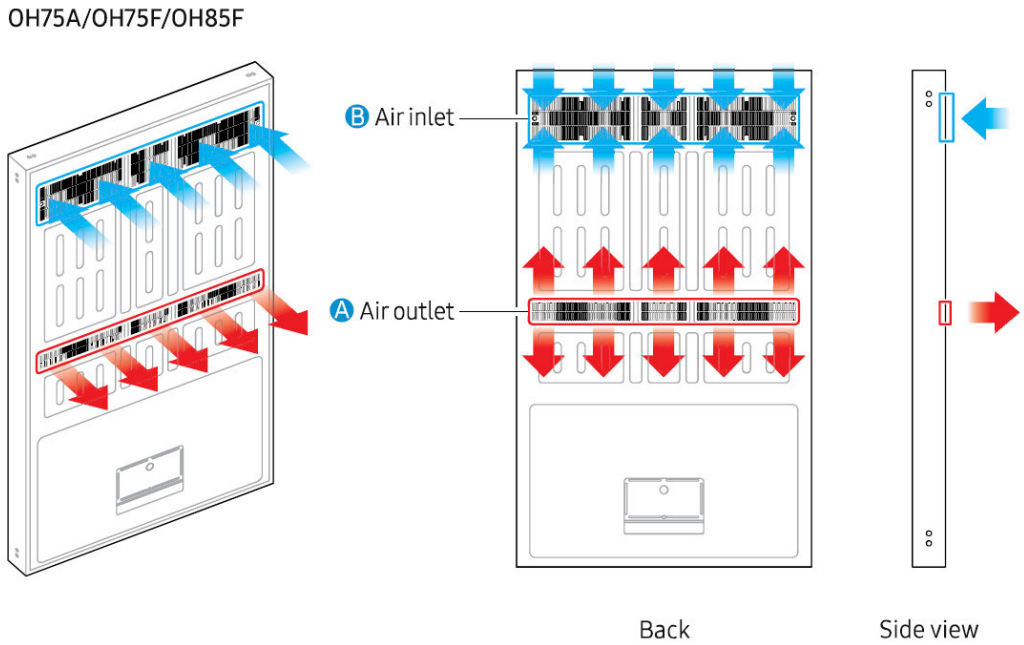

MRI's 75- and 86-inch large-format displays likewise practice and are coextensive with the '740 Patent. As set forth in MRI's domestic industry claim charts in the ITC investigation, MRI's products contain the recited closed loop airflow pathway and open loop of ambient air, both of which are forced by fans through a common heat exchanger in which the open loop air cools the heated closed loop air. Ex. 2054. The open and closed loops and heat exchanger are labeled in the schematic below. Samsung did not dispute that MRI's products practice the '740 Patent during the ITC hearing.

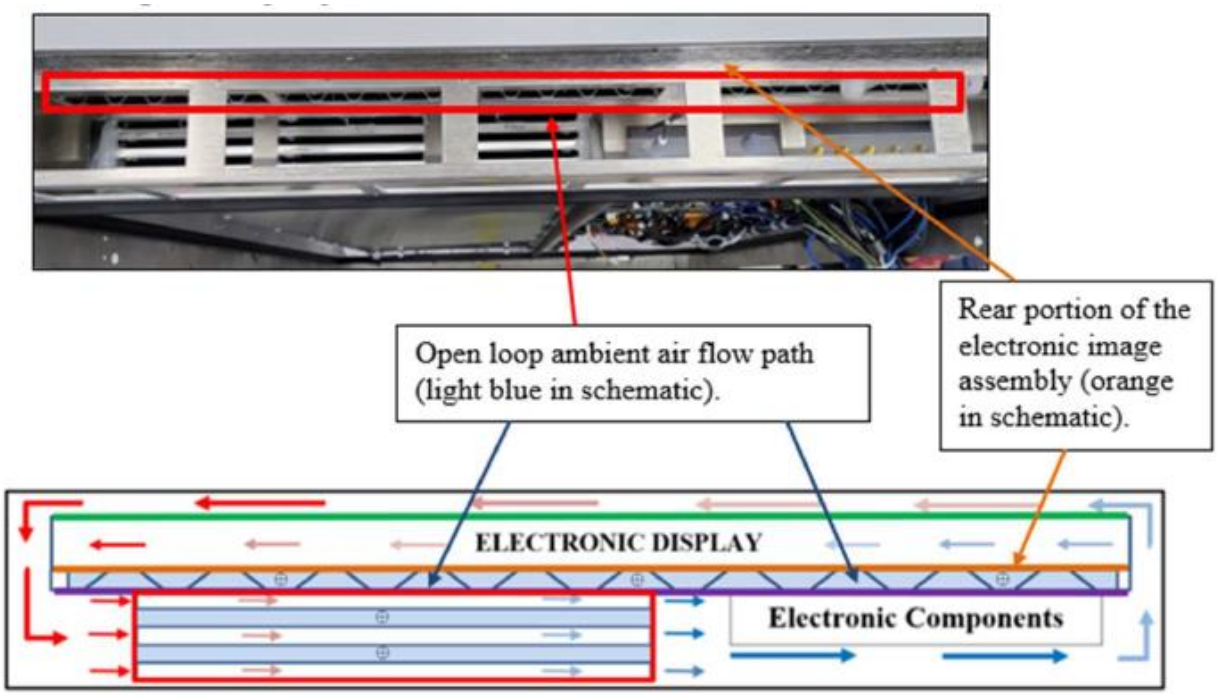

Revealingly, during its development of these copycat OHF products, Samsung performed extraordinarily detailed teardowns and analyses of [redacted] products. "[C]opying the claimed invention … is indicative of non-obviousness." *Windsurfing Int'l Inc. v. AMF, Inc.*, 782 F.2d 995, 1000 (Fed. Cir. 1986). A team of

Samsung engineers obtained and tore down two of [redacted] products: a large format product and a mid-sized product. Exs. 2042, 2043; *see* Ex. 2030 (Sungsu Lee transcript), at 184:15-191:8; Ex. 2031 (Wunkil Lee transcript), 77:13-81:16 (discussing how Samsung disassembled [redacted] products and studied them in early [redacted]; Ex. 2029, 139:7-16; Ex. 2042 (analyzing, specifically, the [redacted] and [redacted] of the Samsung and [redacted] outdoor displays). Thereafter, Samsung released these new versions of its outdoor displays, the OHF series. The OHF series infringes the challenged claims, and are able to function outside and in full sunlight because of their cooling system. Indeed, but for their effective cooling system, these products would not be capable of outdoor use.

C. Commercial Success

MRI's pioneering invention established the market for outdoor LCD displays and MRI has achieved significant success. Indeed, MRI's own sales increased in mid- to late-2008—shortly after the claimed priority date of the '740 Patent—confirming the commercial success is tied to the novel aspects of the '740 Patent. Ex. 2044. MRI's commercial success has continued to the present, with sales of its large-format products alone totaling over [redacted] between 2018 and 2022. Exs. 2045, 2046. Federal Circuit precedent holds sales of this magnitude alone show commercial success. *See e.g.*, *J.T. Eaton & Co. v. Atlantic Paste & Glue Co.*, 106 F.3d 1563, 1566, 1572, (Fed. Cir. 1997) (affirming a finding that

"sales evidence…shows [strong commercial] success," where the "sales evidence" consisted solely of the patentee's "$17 million of sales from 1979 through 1984, and its $4 million of annual sales from 1985 through 1989.")

Samsung also has achieved significant success with its outdoor electronic displays. The integration of the effective cooling system first developed by [redacted]—which was available to Samsung through a tear down of [redacted] technology and disclosures in patents named on the [redacted] on the product Samsung tore down—led to success of the OHF series. All other models of Samsung's outdoor displays also use the same cooling system copied from [redacted] and claimed in the '740 Patent. Ex. 2039. Samsung's market share grew from [redacted] (before entering the outdoor display market) to [redacted] (in 2017 after launch of the Accused Products) to [redacted] (by 2020). Ex. 2041, at 29-30. But for the effective thermal management system invented by MRI, there would be no outdoor LCD market, and Samsung thus would not have achieved its commercial success. Exs. 2001, 2025.

[redacted]

The fact that Samsung developed its commercially successful designs only after experiencing failures with other designs—despite extensive research efforts—and only after MRI's own successful product was in the market, is compelling real-world evidence that MRI's design was not obvious at the time.

D. Industry Praise and Willingness of Others to License the '740 Patent

MRI departed from the established approaches taken by others. Proceeding against the prevailing wisdom, Bill Dunn and Tim Hubbard were able to achieve what others were not by providing a closed loop gas circulation path about the electronic display, an open loop ambient air flow path, and a common heat exchanger in the pathway of both the closed loop and the open loop. This innovative design in which the inventors directed flow paths through a common heat exchanger allowed for greater cooling than the conventional approaches. This

innovative solution enabled the use of large format displays in full sun and high ambient temperatures. *See supra* Part II.

Mr. Dunn's background made him uniquely qualified to make this advancement in the art. After receiving an electrical engineering degree from Georgia Tech, Mr. Dunn embarked on a career dedicated to pioneering display technologies in challenging environments. Ex. 2013, 44:8-13. By 2004 when he founded MRI, Mr. Dunn had over a decade of experience focused on developing LCD technology for use in harsh environments, including developing LCD displays for military aircraft and ground vehicles through his prior companies, Avionic Displays Corporation and American Panel Corporation. Ex. 2013, 42:24-46:14. Mr. Dunn recognized the demand for digital outdoor signage and founded MRI to pursue that opportunity. Ex. 2013, 47:1-14. Direct sunlight proved to be a formidable challenge, as Mr. Dunn learned by observing thermal failures of outdoor LCD displays even in freezing temperatures. Ex. 2013, 58:14-60:25. Mr. Dunn's engineering advances, as claimed in his patent, made it possible to effectively use LCD displays outdoors in the elements.

Samsung itself has recognized these advances. Ex. 2025, at 2. In its 2015 white paper, Samsung observed that "[t]he many barriers that limited how digital screens could be used outdoors and in direct sunlight have all come down." *Id*. "Many early adopters" saw failures "because the components and

engineering…weren't up to the task of working in heat and blazing sun." *Id*. But "years of insights and experience" and "engineering advances" made putting screens in the elements "entirely possible." *Id*.

"[I]f there is evidence of industry praise of the claimed invention in the record, it weighs in favor of the non-obviousness of the claimed invention." *Apple Inc. v. Samsung Electronics Co., Ltd*., 839 F.3d 1034, 1053-54 (Fed. Cir. 2016). Samsung recognized that it was MRI that conquered the "enormous engineering challenges of keeping displays running no matter what Mother Nature threw at them." *Id*.; *see also id*., 3 (acknowledging that "outdoor displays reflect ***years of engineering*** designed to make running an LCD in harsh environments as crisp and reliable as running an LCD on the reception wall of a law office"). In correspondence to Mr. Dunn from Romulus Stoian, Samsung's DOOH Leader (i.e., digital out-of home leader), Samsung sought to "embrace the MRI technology," calling it "impressive and unique." Ex. 2001. Samsung praised Mr. Dunn for "entering into a virgin space" and "pioneer[ing] a new business model." *Id, see also* Ex. 2048 (Vertigo, a competitor, calling MRI a "technology leader").

Bill,

Good afternoon and many thanks for taking the time talking to me.
What you've done at MRI it's impressive and unique; I bet was not easy entering into a virgin space and then shortly after being able to pioneer a new business model based on turnkey solutions for DOOH, raising the bar for high quality standards.

Per our conversation, I see loads of opportunities for collaboration in the outdoor space (smart city, transit, rail, etc) where we can embrace the MRI technology and blended in with Samsung displays. Our customers will benefit from quality products and executions.

See attached our MNDA. Kindly review and add comments if needed too.
Thank you. Again, a real pleasure talking to you Sir.

Romulus Stoian
Director, DOOH Leader
Digital Innovation Solutions
Display B2B Team

Samsung SDS America

Other third parties have also recognized MRI's innovations by licensing the '740 Patent and paying royalties for use of the claimed inventions. Indeed, Samsung's primary competitor LG has acknowledged MRI's innovations by not only licensing MRI's patents but also has entering a joint venture with MRI for marketing MRI's products. Ex. 2049 (LG license); Ex. 2050 (LG-MRI joint venture agreement). Others in addition to LG have taken licenses. Ex. 2051 (Megatech); 2052 ([redacted]). The willingness of others to license the patent is additional evidence that others in the industry appreciated the validity and value of MRI's '740 patent, thereby supporting the non-obviousness of the invention.

MRI's patented cooling technology is also a critical feature of Samsung's products that Samsung uses as a key selling point of its products in its marketing to its customers and without which the products would not work. Ex. 2038, at 99-102 (focusing on the thermal management system, and explaining the primary

considerations of an outdoor display enclosure is the heat dissipation for components, cooling from solar radiation, and sealing of the enclosure from dust and water). John Palmer, who is a Samsung customer and integrator of the Samsung OH displays for end users, testified that Samsung's products were requested by customers (and believed by Palmer to be superior) because of their built-in cooling systems. Ex. 2032 (Palmer transcript), 118:6-119:8.

The foregoing real-world facts show that the claimed inventions would not have been obvious to a person of ordinary skill in the art in 2008. Despite the demand for outdoor displays, no one (including Samsung, despite having begun attempting to develop outdoor displays at least by 2005) was successful until Mr. Dunn and Mr. Hubbard conceived of their invention. Only after MRI's pioneering design and Samsung's own failures with other designs, was Samsung ultimately able to achieve success by infringing.

IX. CONCLUSION

Patent Owner respectfully asserts that the Petition fails to establish by a preponderance of evidence that any of the Challenged Claims is obvious.

Dated: September 26, 2023

/s/ John C. Alemanni
John C. Alemanni
Reg. No. 47,384
Counsel for Patent Owner

CERTIFICATE OF WORD COUNT

Pursuant to 37 C.F.R. § 42.24(d), the undersigned certifies that this Preliminary Response contains 13,913 words according to the word-processing program used to prepare this paper. The foregoing word count complies with the 14,000 word type-volume limit specified by 37 C.F.R. § 42.24(b)(2).

Dated: September 26, 2023

Respectfully submitted,

/s/ John C. Alemanni
John C. Alemanni
Reg. No. 47,384
Counsel for Patent Owner

CERTIFICATE OF SERVICE

The undersigned hereby certifies that a copy of the foregoing **PATENT OWNER'S RESPONSE** has been served electronically via email upon the following:

Sanjeet Dutta – sdutta@goodwinlaw.com
Douglas J. Kline – dkline@goodwinlaw.com
Srikanth Reedy – sreddy@goodwinlaw.com
Naomi L. Birbach – nbirbach@goodwinlaw.com

Dated: September 26, 2023

By: */s/ John C. Alemanni*
John C. Alemanni
Reg. No. 47,384
Counsel for Patent Owner