SAMSUNG

Samsung Electronics Co. Ltd. and Samsung Electronics America, Inc.
v.
Manufacturing Resources International, Inc.

IPR2023-00221
IPR2023-00254

Petitioners' Hearing Demonstratives

March 20, 2024

The Challenged Claims of the ’740 and ‘142 Patents Are Unpatentable

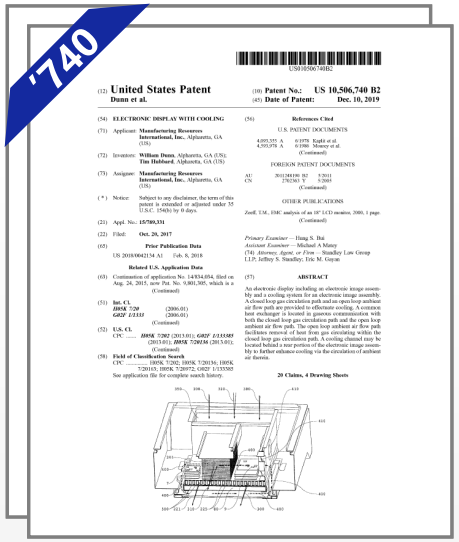

IPR254, Ex. 1001 (’740 Patent)

Ground 1: Claims 1–3, 5–9, 11–13, 15–18, and 20 are obvious in view of Karppanen (Ex. 1004)

Ground 2: Claims 1–3, 5, 6, 8, 9, 11–13, 15–18, and 20 are obvious in view of Yare (Ex. 1005)

IPR254, Pet. (Paper 9), 5

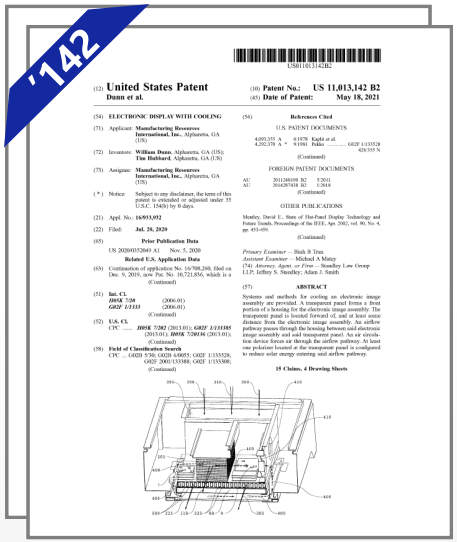

IPR221, Ex. 1001 (’142 Patent)

Ground 1: Claims 1–15 are obvious in view of Karppanen and Larson (Exs. 1004, 1005)

Ground 2: Claims 1–15 are obvious in view of Yare and Larson (Exs. 1006, 1005)

IPR221, Pet. (Paper 9), 5

Overview of the ’740 and ‘142 Patents

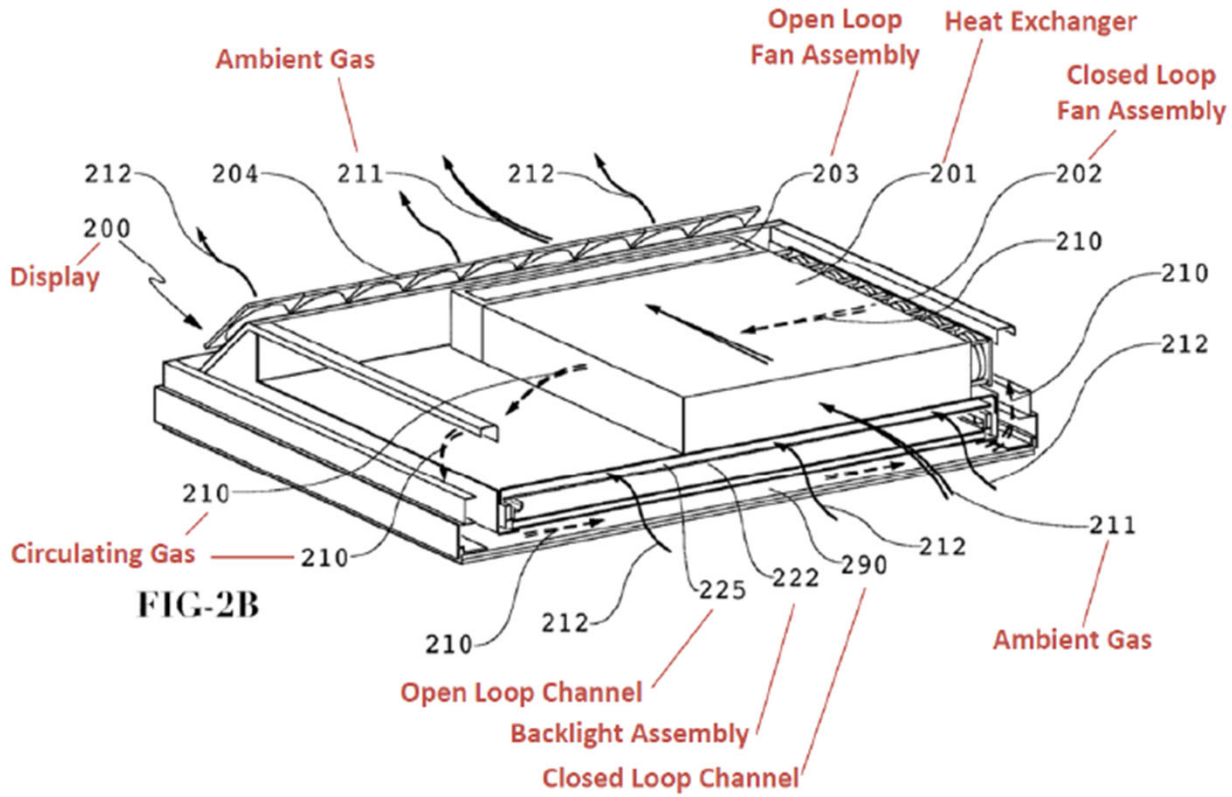

FIG-2B

IPR254, Ex. 1001 (’740 Patent), Fig. 2B (annotated); IPR221, Ex. 1001 (’142 patent), Fig. 2B (annotated)

IPR254, Pet. (Paper 9), 6-9; IPR221, Pet. (Paper 9), 6-11

Person of Ordinary Skill in the Art

Bachelor's degree in a pertinent discipline, such as mechanical engineering, physics, product design, or a related field. Such a person would also have 2-4 years of experience in working with electronic displays and have an understanding of product design issues and failure modes associated with electronic displays.

OR

5-7 years of experience in the field working with electronic displays and have a similar understanding of product design issues and failure modes associated with electronic displays.

IPR254: Paper 9 (Pet.), 6; Ex. 1002 (Smith-Gillespie Decl.), ¶ 39; Inst. Dec. (Paper 11), 11

IPR221: Paper 9 (Pet.), 6; Ex. 1002 (Smith-Gillespie Decl.) ¶ 39; Inst. Dec. (Paper 11), 12

Challenged Claims of the ‘740 and ‘142 Patents

	‘740 Patent	’142 Patent
Open Loop	✓	✓
Closed Loop	✓	✓
Heat Exchanger	✓	✓*
Solar Energy Reduction Layer		✓

IPR254, Ex. 1001 (‘740 Patent), cls. 1-3, 5-9, 11-13, 15-18, 20

IPR221, Ex. 1001 (‘142 Patent), cls. 1-15

Claim Construction

Claim Term	Samsung's Construction	MRI's Construction
"closed loop" ['740 Patent, Claims 1, 5, 6, 8, 11, 15-17, 20] ['142 Patent, Claims 1, 3, 6, 12, 15]	"gas pathway within a display housing containing gas that is essentially isolated from external air"	"a gas pathway forming a complete loop within a display housing"
"heat exchanger" ['740 Patent, Claims 1, 8, 11, 17] ['142 Patent, Claims 3, 6, 15]	Plain and ordinary meaning – i.e., a device used to transfer heat from the closed loop pathway to the open loop pathway	Plain and ordinary meaning – i.e., a device that uses alternating enclosed channels or tubes of fluid

IPR254: Pet. (Paper 9), 10-12; POR (Paper 17), 9-18; Reply (Paper 28), 4-12; Sur-Reply (Paper 37), 6-12; Ex. 1002 (Smith-Gillespie Decl.), ¶¶ 78-95, 123, 135

IPR221: Pet. (Paper 9), 12-14; POR (Paper 17), 18-27; Reply (Paper 28), 4-11; Sur-Reply (Paper 37), 6-12; Ex. 1002 (Smith-Gillespie Decl.), ¶¶ 90-103, 61-64, 76

Heat Exchanger Meaning: Relevant Evidence

Claims

Specification

Prosecution History

- Thielmans

IPR254, Ex. 1030 (Thielemans); IPR221, Ex. 1034 (Thielemans)

Dr. Pokharna's Testimony and Positions on Prior Art Disclosures

- Williams
- Yare
- Nagashima

IPR254, Ex. 1007 (Williams)
IPR254, Ex. 1005 (Yare); IPR221, Ex. 1006 (Yare)
IPR254, Ex. 2020 (Nagashima) IPR221, Ex. 2020 (Nagashima)

Heat Exchanger: The Claim Language Supports the Broad Plain and Ordinary Meaning

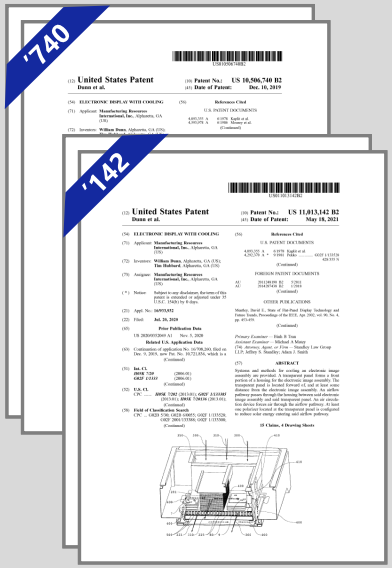

- Claims refer broadly to a "heat exchanger"
- Claim limitations in the '740 Patent requiring air travel "through" the heat exchanger or in the '142 Patent requiring the heat exchanger "forms part of [the open or closed loop] pathway" do not change the broad interpretation

What is claimed is:

1. An electronic display comprising:

an electronic image assembly having a front portion and a rear portion;

an open loop ambient air flow path behind the rear portion of the electronic image assembly;

a closed loop gas circulation path about the electronic image assembly;

a common heat exchanger located in the pathway of both the closed loop gas circulation path and the open loop ambient air flow path;

a gas circulation device positioned to force circulating gas through the common heat exchanger; and

an air circulation device positioned to force ambient air through the common heat exchanger.

IPR254, Ex. 1001 ('740 Patent), cl. 1

6. A cooling system for an electronic image assembly, the cooling system comprising:

an open loop airflow pathway passing through the housing behind the electronic image assembly;

a closed loop gas circulation pathway contained within the housing, wherein a portion of said closed loop gas circulation pathway passes between said transparent cover panel and said electronic image assembly;

a heat exchanger located rearward of the electronic image assembly, wherein a first portion of said heat exchanger forms part of said open loop airflow pathway, and wherein a second portion of said heat exchanger forms part of said closed loop gas circulation pathway; and

IPR221, Ex. 1001 ('142 Patent), cl. 6

IPR254, Ex. 1001 ('740 Patent), cls. 1, 8, 17; IPR221, Ex. 1001 ('142 Patent), cls. 3, 6, 15

Heat Exchanger: The Specification Supports the Broad Plain and Ordinary Meaning

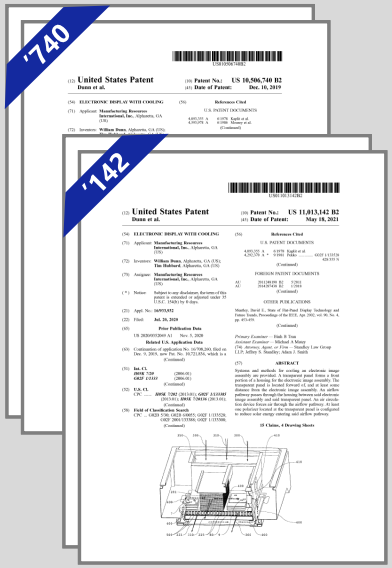

display housing. A heat exchanger may be used to transfer heat from the circulating gas to the ambient gas. In alterna-

IPR254: Ex. 1001 ('740 Patent), 2:47-48; Reply (Paper 28), 7; IPR221: Ex. 1001 ('142 Patent), 2:51-52; Reply (Paper 28), 7

assembly or image assembly (see FIGS. **2A-2B**). By using the heat exchanger **101**, heat may be transferred from the circulating gas to the ambient gas. The heated ambient gas

IPR254: Ex. 1001 ('740 Patent), 4:11-13; Reply (Paper 28), 7; IPR221: Ex. 1001 ('142 Patent), 4:14-16; Reply (Paper 28), 7

ambient gas from harming the interior of the display. In a preferred embodiment, the heat exchanger **101** would be a cross-flow heat exchanger. However, many types of heat exchangers are known and can be used with any of the embodiments herein. The heat exchanger **101** may be a

IPR254: Ex. 1001 ('740 Patent), 4:18-22; Reply (Paper 28), 7; IPR221: Ex. 1001 ('142 Patent), 4:21-25; Reply (Paper 28), 7

Heat Exchanger: The Prosecution History Supports the Broad Plain and Ordinary Meaning

- During prosecution, MRI did not disagree with Examiner's finding that prior art reference Thielemans discloses a "heat exchanger"

Fig.1a

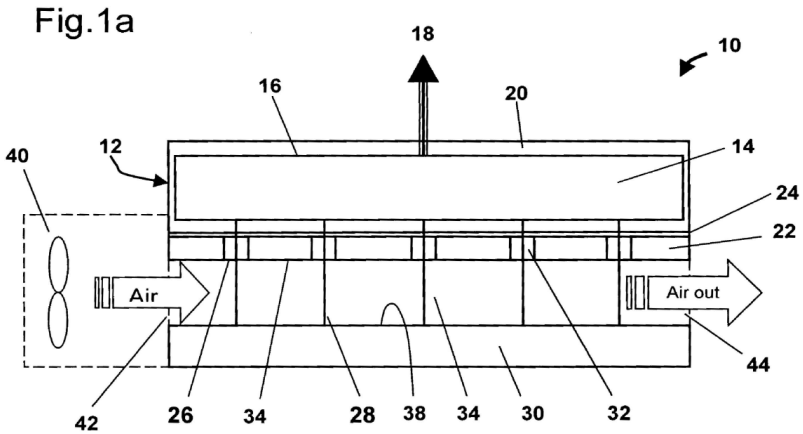

IPR254, Ex. 1030 (Thielemans), Fig. 1a.

Per claim 1 Thielemans et al. teaches an electronic display (10, see fig.1a-1b) comprising: an electronic image assembly ((12, 28), (22, 24) & 30, see fig.1a-1b) having a front portion (22 & 24, see fig.1b) and a rear portion (30); an open loop ambient air flow path ((42, 44) & 34) behind the rear portion (see fig.1b, "38 is the behind portion") of the electronic image assembly ([0051]-[0053] & [0056]); a closed loop gas circulation path (22 & 34; [0051] & [0052], line 7-9) about the electronic image assembly ([0051]-[0053] & [0054]); a common heat exchanger (22) located in the pathway of both the closed loop gas circulation path and the open loop ambient air flow path ([0051]-[0053]); a gas circulation device positioned to force circulating gas through the common heat exchanger ([0053]); and an air circulation device positioned to force ambient air through the common heat exchanger ([0055]).

IPR254: Pet. (Paper 9), 10, 28-29; Reply (Paper 28), 9-10; Ex. 1031.0238-9 ('740 File History); Ex. 1030 (Thielemans), ¶ 39; Ex. 1002 (Smith-Gillespie Decl.), ¶ 135; *see also* IPR221, Reply (Paper 28), 8-9

Dr. Pokharna Has Confirmed that a POSITA Understands the Term "Heat Exchanger" Broadly

of high temperature to low temperature) as a "heat exchanger." Though persons of skill in the art will sometimes refer to a device that moves heat as a heat exchanger,

IPR254, Ex. 2024 (Pokharna Decl.), ¶ 96

20 removing heat from surface to a fluid stream. It's a
21 pretty broad term that is used in -- in context it
22 may -- there are literally hundreds of kinds of heat
23 exchangers. And to define it broadly is not possible
24 in a deposition, but it's broadly used for exchanging
25 heat from one fluid stream to other fluid stream.

IPR254, Ex. 1036 (Pokharna Dep. Tr.), 19:8–25

Heat Exchanger: Dr. Pokharna's ITC Position on Williams is Consistent With the Broad Plain and Ordinary Meaning

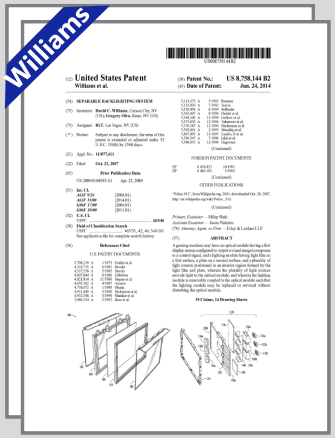

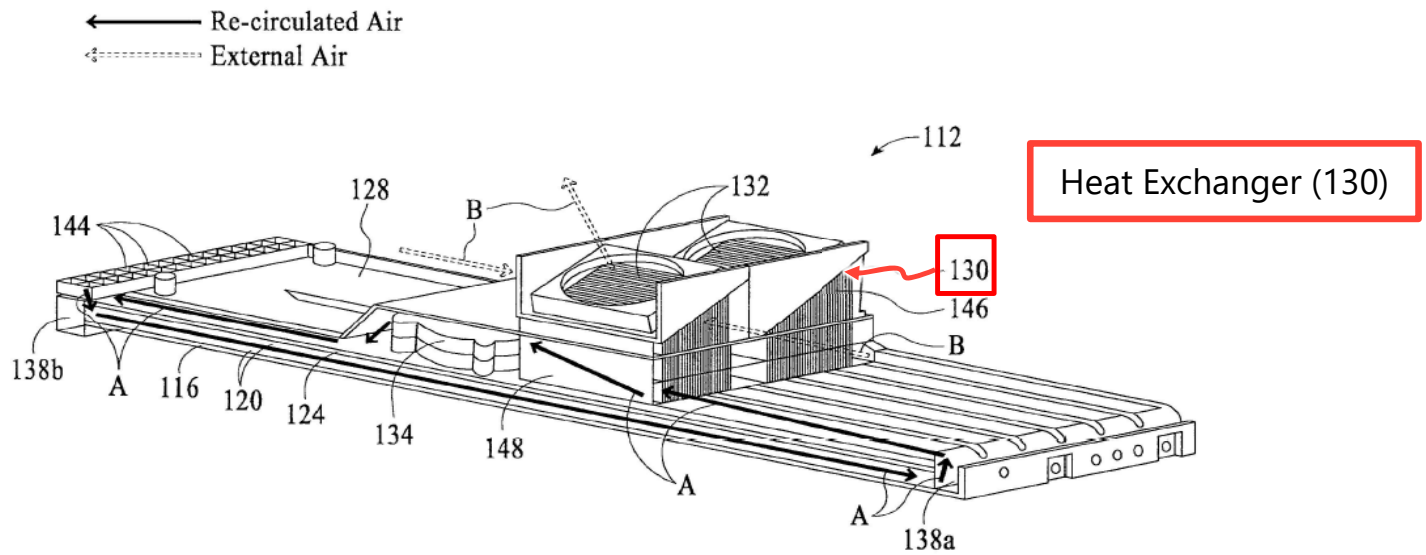

IPR254, Ex. 1007 (Williams), Fig. 1D

FIG.1D

IPR254, Reply (Paper 28), 12; Ex. 1035 (FID), 254-54; *see also* Ex. 1002 (Smith-Gillespie Decl.) ¶¶ 140-42

Heat Exchanger: Dr. Pokharna's Position on Yare is Consistent With the Broad Plain and Ordinary Meaning

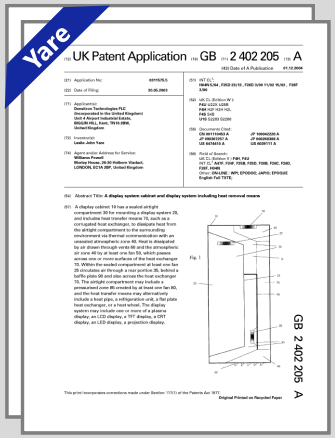

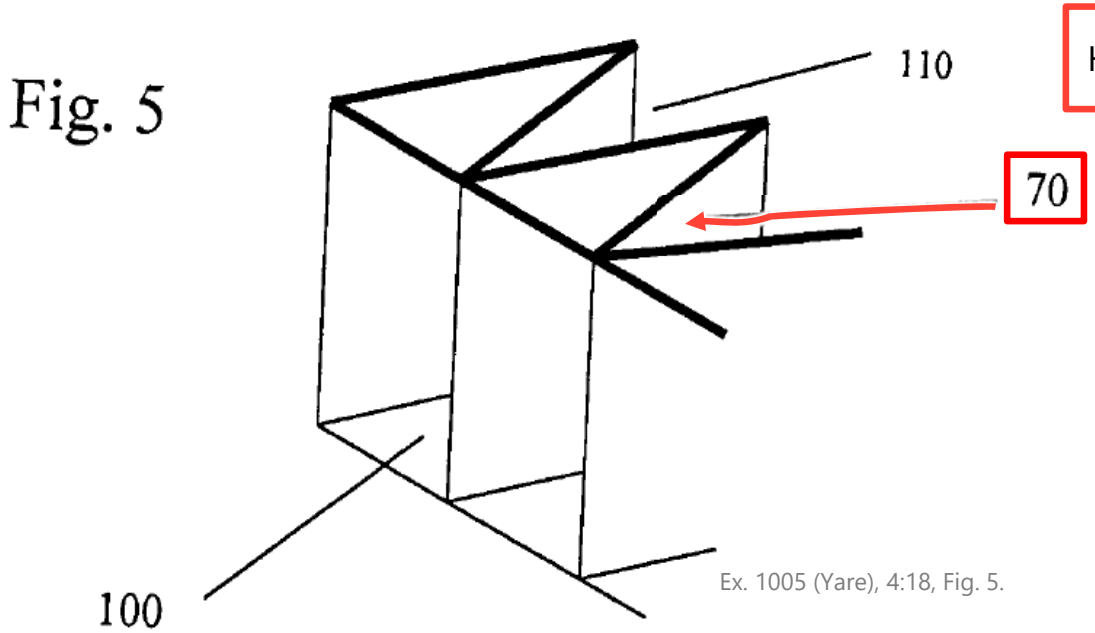

Heat Exchanger (70)

Ex. 1005 (Yare), 4:18, Fig. 5.

IPR254, Ex. 2024 (Pokharna Decl.), ¶ 138; POR (Paper 17), 44-47; Reply (Paper 28), 17 n. 2; Ex. 1035 (FID), 255 n. 102; *see also* Ex. 1002 (Smith-Gillespie Decl.), ¶¶ 287-89

Heat Exchanger: Dr. Pokharna's Position on Nagashima is Consistent With the Broad Plain and Ordinary Meaning

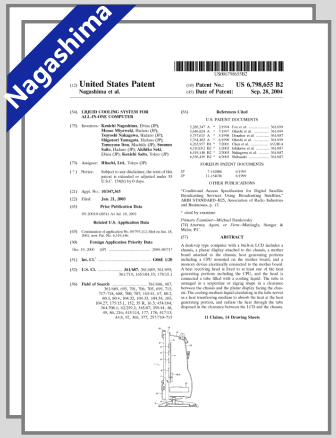

FIG. 6B

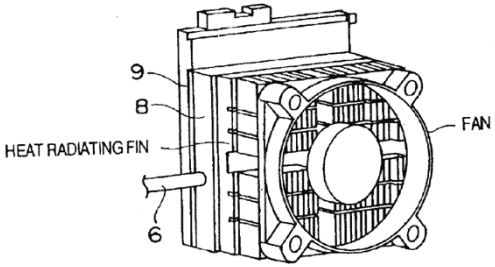

IPR254: Paper 28, 6-7; Ex. 2020 (Nagashima), 4:18, Fig. 5

IPR221: Paper 28, 6; Ex. 2020 (Naghisma), 4:18, Fig. 5

23 Q. So in your opinion, how would a person
24 skilled in the art understand the direction of the
25 airflow generated by the fan located on the heat
1 receiving head?
2 A. So when it blows air, it could be -- I
3 mean, this is something that would require me to draw
4 certain things on this. But it could be taking in air
5 from the inlet or through various inlets, and it will
6 go through the heat exchanger and then find its way out
7 of the chassis through the holes that are existent on
8 the chassis 3. It will also go through some other
9 holes.

IPR254, Ex. 1037 (Pokharna Dep.), 41:23-42:9; IPR221, Ex. 1032 (Pokharna Dep.), 41:23-42:9

The Claims Should Not be Limited to a Preferred Embodiment

VLSI Tech. LLC v. Intel Corp.

Claims "should not be limited 'to preferred embodiments or specific examples in the specification.'"

53 F.4th 646, 652 (Fed. Cir. 2022)

ambient gas from harming the interior of the display. In a preferred embodiment, the heat exchanger **101** would be a cross-flow heat exchanger. However, many types of heat exchangers are known and can be used with any of the embodiments herein. The heat exchanger **101** may be a

IPR254, Reply (Paper 28), 7-8, Ex. 1001 ('740 Patent), 4:18-22

IPR221, Reply (Paper 28), 7; Ex. 1001 ('142 Patent), 4:22-25

’740 Patent, Ground 1: Obvious in View of Karppanen

Ground 1: Karppanen in View of the Knowledge of a POSITA

Claim Element	Claim Language
1[pre]	An electronic display comprising:
1[a]	an electronic image assembly having a front portion and a rear portion;
1[b]	an open loop ambient air flow path behind the rear portion of the electronic image assembly;
1[c]	a **closed loop** gas circulation path about the electronic image assembly;
1[d]	a common **heat exchanger** located in the pathway of both the closed loop gas circulation path and the open loop ambient air flow path;
1[e]	a gas circulation device positioned to force circulating gas **through the common heat exchanger**; and
1[f]	an air circulation device positioned to force ambient air **through the common heat exchanger**.

IPR0254, Ex. 1001 ('740 Patent), Claim 1

Karppanen (Ex. 1004)

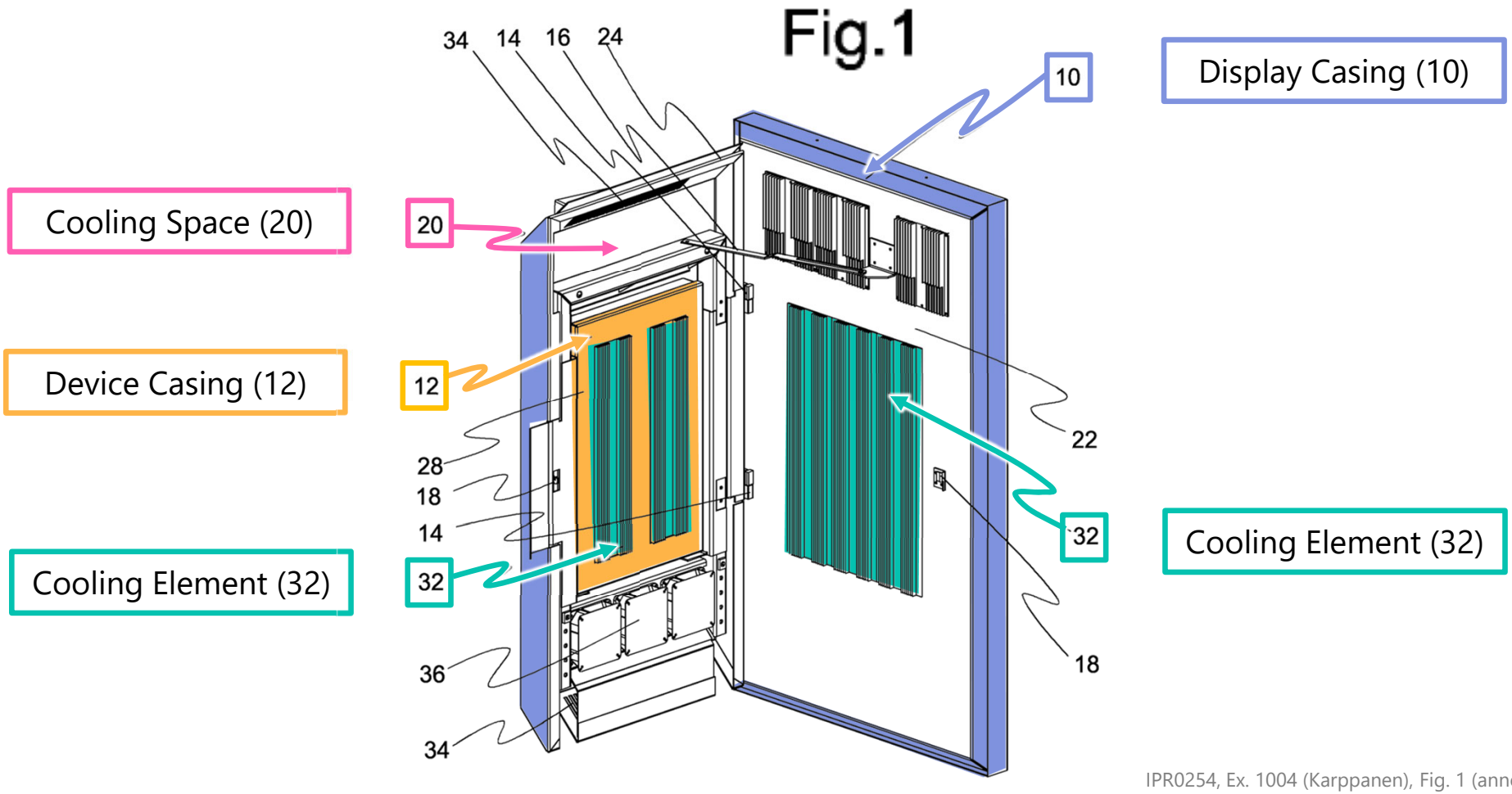

IPR0254, Ex. 1004 (Karppanen), Fig. 1 (annotated)

Karppanen Discloses a Closed Loop Under Samsung's Construction

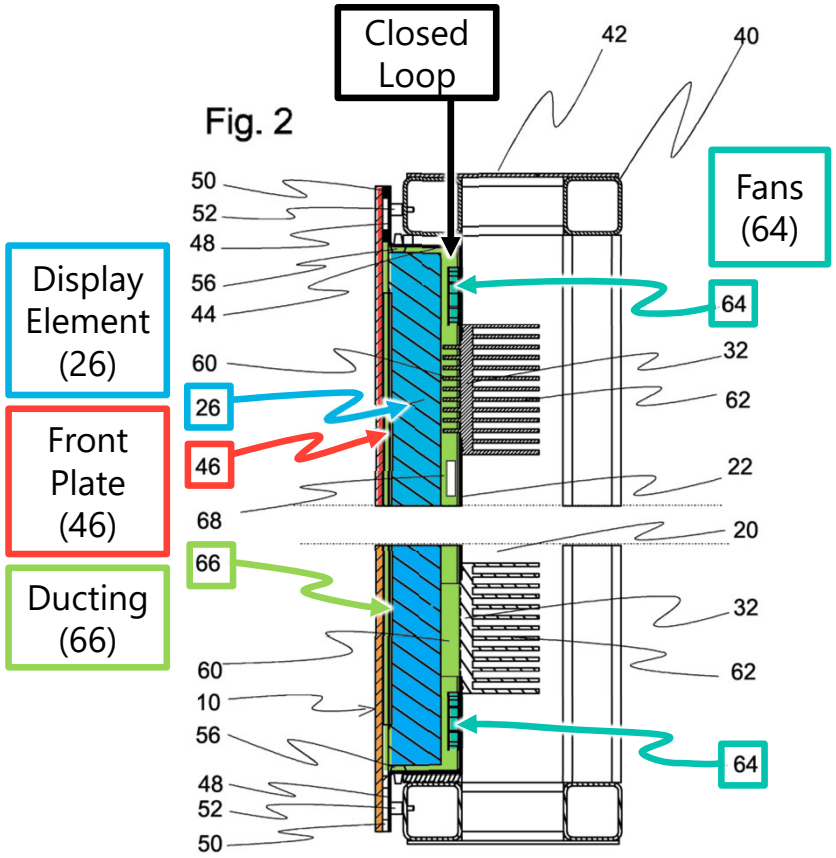

IPR254, Ex. 1004 (Karppanen), Fig. 2 (annotated)

ment and the display casing, and ducting has been arranged between the walls of the casing and the display element for directing the circulation of air around the display element. There may also be electrically operated warming elements in the

IPR254, Ex. 1004 (Karppanen), 4:34-36

In another preferred embodiment of the invention, the display casing and the device casing have been made weatherproof for enabling the performance of updating and maintenance measures outdoors.

IPR254, Ex. 1004 (Karppanen), 4:6-8

example, as depicted obliquely from behind. The information board has a closed display casing 10, to the back wall 22 of which a cover 24 opening on hinges 14 has been connected. The cover is trough-shaped, i.e. it has a flat bottom and

IPR254, Ex. 1004 (Karppanen), 6:17-21

IPR254, Pet. (Paper 9), 23-25; Reply (Paper 28), 2-4; Ex. 1002 (Smith-Gillespie Decl.), ¶ 122

Karppanen Discloses a Heat Exchanger to Transfer Heat Between the Open and Closed Loop Pathways

In the back wall of the display casing there are cooling elements 32, which have a first heat transfer part 60 extending to the inside of the display casing and a second heat transfer part 62 extending to the cooling space 20 outside the display casing. The second heat transfer part comprises a number of plate-like cooling fins placed side by side. The operation of the cooling fins is based on the phenomenon that when the cooling air flows between the fins, heat is transferred from the cooling fins to the air of the cooling space. The task of the cooling elements is to transfer excess thermal energy from the display casing to the cooling space, from which it is further conducted by the air flow produced by the cooling fans 36 out from the entire device. Instead of the cooling fins or in addition to them, the second heat

IPR254, Ex. 1004 (Karppanen), 8:13-22

The first cooling element 32, in which the first heat transfer part 60 extending to the display casing comprises cooling fins, is shown in the upper part of Fig. 2 by way of example. Inside the display casing on the back wall 22 there are fans 64,

IPR254, Ex. 1004 (Karppanen), 9:1-3

Fig. 2

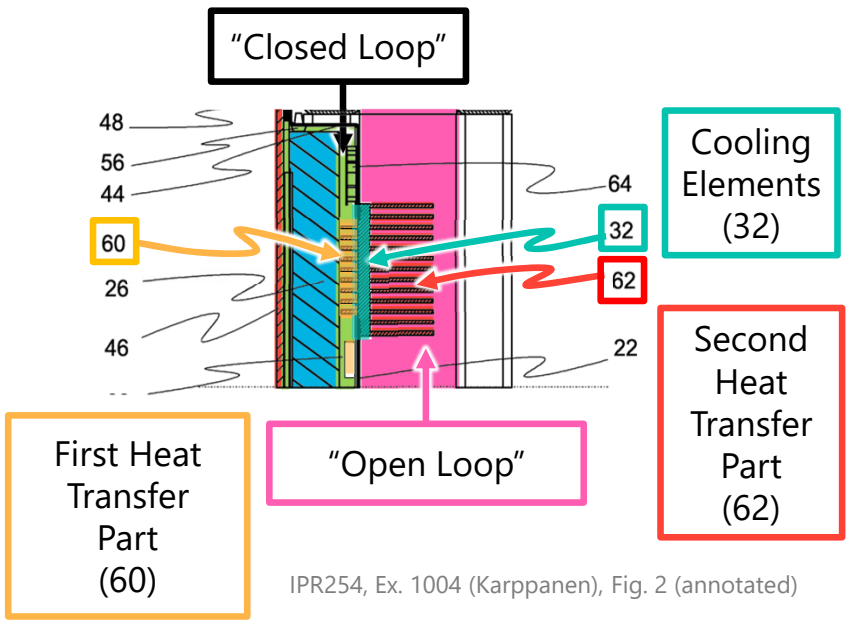

IPR254, Ex. 1004 (Karppanen), Fig. 2 (annotated)

IPR254, Pet. (Paper 9), 25-27; Ex. 1002 (Smith-Gillespie Decl.), ¶¶ 123-30

Karppanen Discloses a Gas Circulation Device Forcing Gas Through the Heat Exchanger

way of example. Inside the display casing on the back wall 22 there are fans 64, which circulate air in the space between the display element and the walls of the display casing. Suitable ducting 66 has been arranged between the display casing and the display element so that an air flow circulating the display element and equalizing the temperatures can be arranged by means of the fans. The fans 64 force the air of the inner casing to flow past the front plate 46 of the device. In cool

IPR254, Ex. 1004 (Karppanen), 9:3-8

placed side by side. The operation of the cooling fins is based on the phenomenon that when the cooling air flows between the fins, heat is transferred from the cooling fins to the air of the cooling space. The task of the cooling elements is to trans-

IPR254, Ex. 1004 (Karppanen), 8:17-19

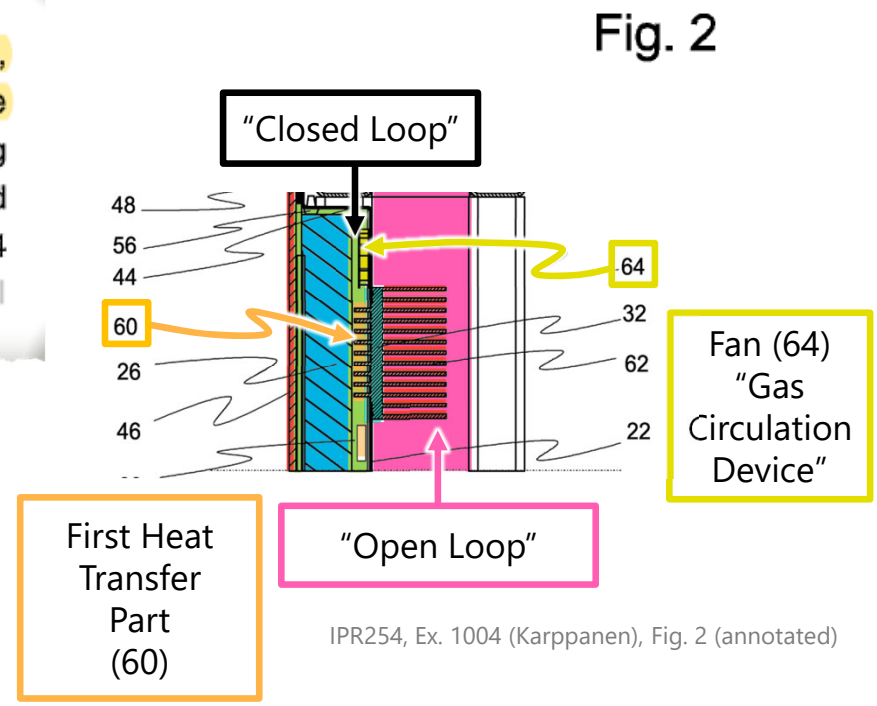

IPR254, Ex. 1004 (Karppanen), Fig. 2 (annotated)

IPR254, Pet. (Paper 9), 27-29; Ex. 1002 (Smith-Gillespie Decl.), ¶¶ 131-35

Karppanen Discloses an Air Circulation Device Forcing Air Through the Heat Exchanger

ventilation space. In the cover 24 there are cooling fans 36, by which the circulation of air through the cooling space is regulated. The temperature and speed of

IPR254, Pet. (Paper 9), 30-32; Ex. 1004 (Karppanen), 7:21-22

placed side by side. The operation of the cooling fins is based on the phenomenon that when the cooling air flows between the fins, heat is transferred from the cooling fins to the air of the cooling space. The task of the cooling elements is to trans-

IPR254, Pet. (Paper 9), 30-32; Ex. 1004 (Karppanen), 8:17-19

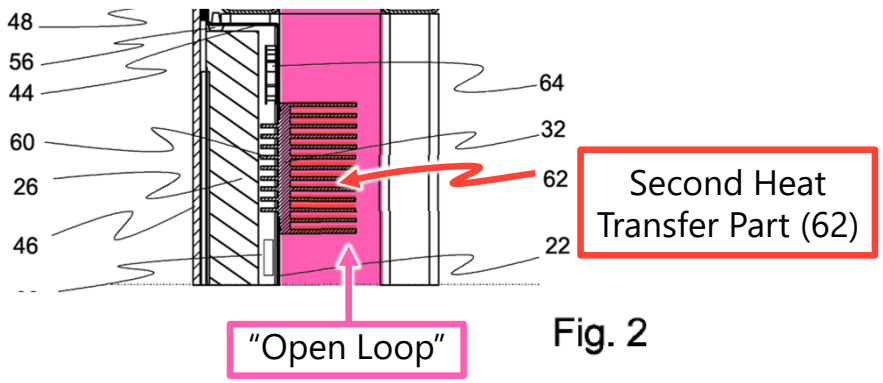

Fig. 2

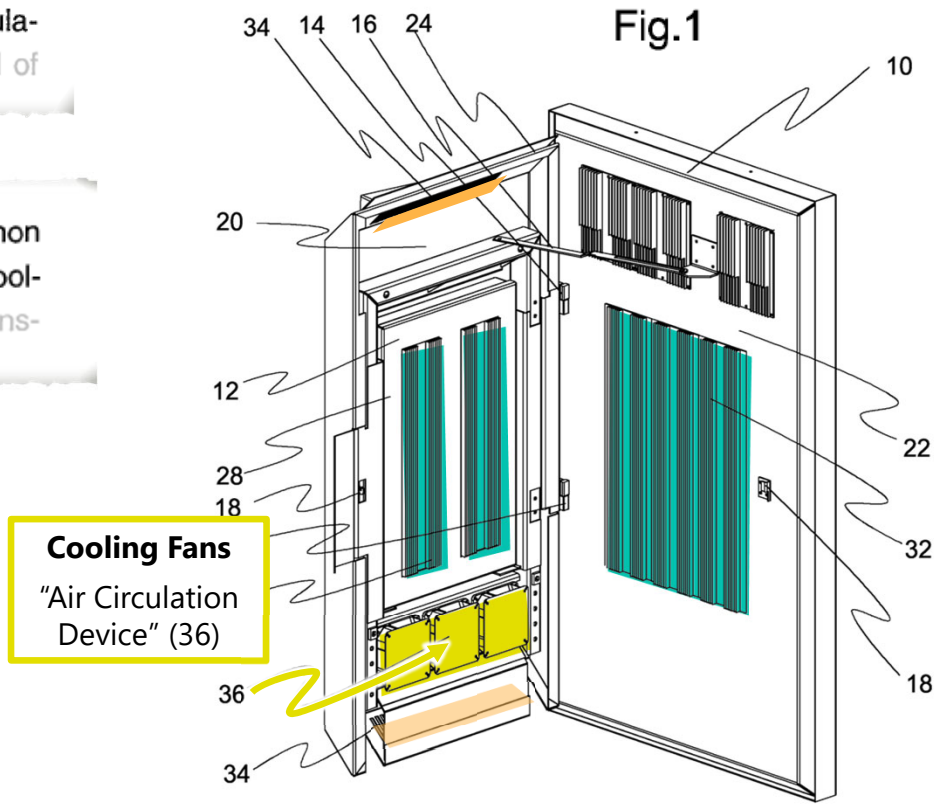

IPR254, Ex. 1004 (Karppanen), Figs. 1 and 2 (annotated)

IPR254, Pet. (Paper 9), 30–32; Ex. 1002 (Smith-Gillespie Decl.), ¶¶ 155-57

It Would Have Been Obvious to Modify Karppanen's Heat Exchanger in View of Knowledge in the Art

- Evidence shows that it would have been within the skill of a POSITA to modify Karppanen's heat exchanger

KSR Int'l Co. v. Teleflex Inc.

"if a technique has been used to improve one device, and a [POSITA] would recognize that it would improve similar devices in the same way, using the technique is obvious unless its actual application is beyond his or her skill."

550 U.S. 398, 401 (2007)

Williams (Ex. 1007)

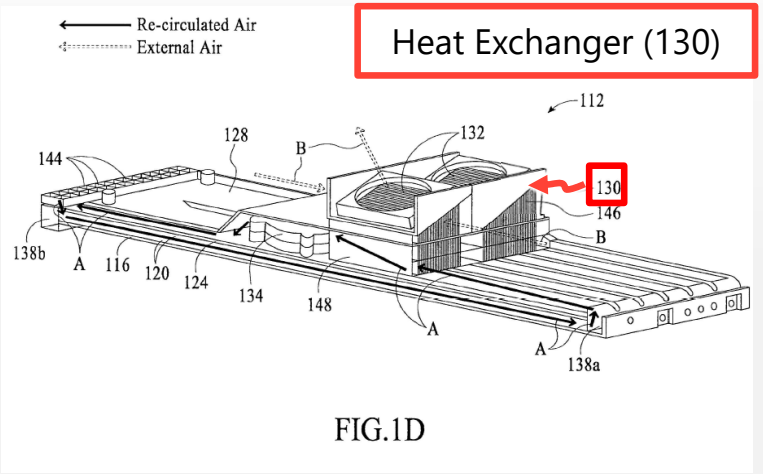

IPR254, Ex. 1007 (Williams), 1:40-41,1:12-14, Fig. 1D

IPR254, Pet. (Paper 9), 29-30; Reply (Paper 28), 14-15; Ex. 1002 (Smith-Gillespie Decl.), ¶¶ 136-53

’142 Patent, Ground 1: Obvious in View of Karppanen and Larson

’142 Patent, Ground 1: Karppanen and Larson

Claim Element	Claim Language
6[pre]	A cooling system for an electronic image assembly, the cooling system comprising:
6[a]	a housing for the electronic image assembly;
6[b]	a transparent cover panel forming a front portion of the housing, the transparent cover panel located forward of, and at least some distance from, the electronic image assembly;
6[c]	an open loop airflow pathway passing through the housing behind the electronic image assembly;
6[d]	a **closed loop** gas circulation pathway contained within the housing, wherein a portion of said closed loop gas circulation pathway passes between said transparent cover panel and said electronic image assembly;
6[e]	an inlet located at a first portion of said housing for ingesting ambient air into said open loop airflow pathway;
6[f]	an exhaust located at a second portion of said housing for exhausting said ambient air from said open loop airflow pathway;
6[g]	an air circulation device positioned along said open loop airflow pathway between said inlet and said exhaust, wherein said air circulation device is configured to force said ambient air through the open loop airflow pathway when activated;
6[h]	a gas circulation device positioned along said closed loop gas circulation pathway to force circulating gas around the closed loop gas circulation pathway when activated;
6[i]	a **heat exchanger** located rearward of the electronic image assembly, wherein a first portion of said heat exchanger forms part of said open loop airflow pathway, and wherein a second portion of said heat exchanger forms part of said closed loop gas circulation pathway; and
6[j]	one or more **solar energy reduction layers** located at said transparent cover panel, wherein each of said one or more solar energy reduction layers is configured to prevent a portion of solar energy entering said transparent cover panel from thermally interacting with the circulating gas at said portion of said closed loop gas circulation pathway passing between said transparent cover panel and said electronic image assembly or thermally interacting with said electronic image assembly.

IPR221, Ex. 1001 (’142 Patent), Cl. 6

Karppanen Discloses the Closed Loop Under Samsung's Construction

'142 Patent, Claim 6[d]	'740 Patent, Claim 1[c], Claim 5	Karppanen
"a closed loop gas circulation pathway contained within the housing, wherein a portion of said closed loop gas circulation pathway passes between said transparent cover panel and said electronic image assembly"	1[c]: "a closed loop gas circulation path about the electronic image assembly" "5: a front channel defined by the space between the front display surface and the front portion of the electronic image assembly, the front channel forming part of the closed loop gas circulation path.	✓

Display Element (26)

Front Plate (46)
"Front Display Surface"

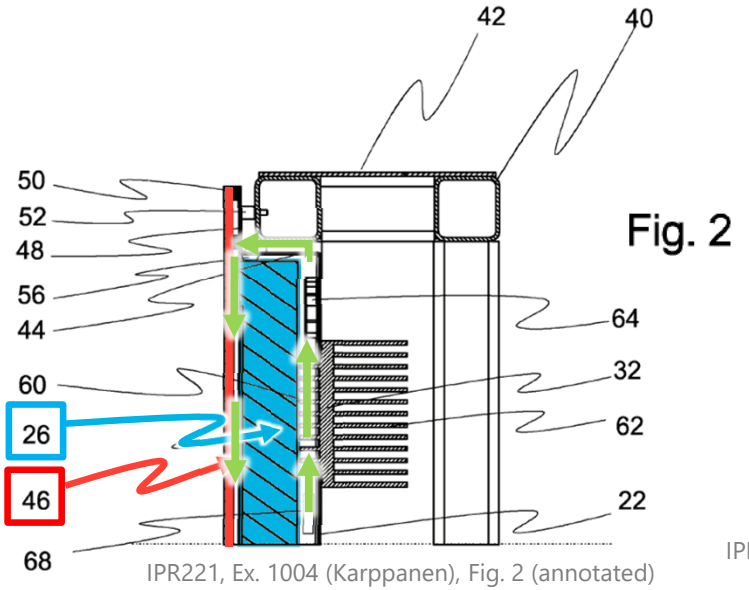

IPR221, Ex. 1004 (Karppanen), Fig. 2 (annotated)

IPR221, Pet. (Paper 9), 45-46; Reply (Paper 28), 2-4

Karppanen Discloses the Claimed Heat Exchanger

’142 Patent, Claim 6[i]	’740 Patent, Claim 1[d]	Karppanen
“a heat exchanger located rearward of the electronic image assembly, wherein a first portion of said heat exchanger forms part of said open loop airflow pathway, and wherein a second portion of said heat exchanger forms part of said closed loop gas circulation pathway”	“a common heat exchanger located in the pathway of both the closed loop gas circulation path and the open loop ambient air flow path”	✓

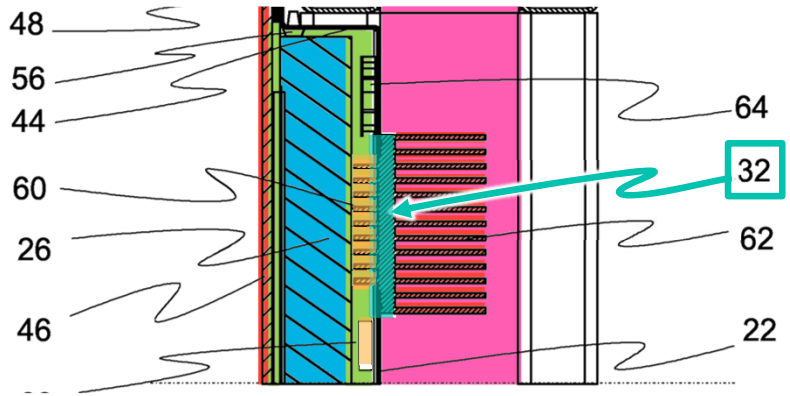

Cooling Elements (32)
“Heat Exchanger”

Fig. 2

IPR221, Ex. 1004 (Karppanen), Fig. 2 (annotated)

IPR221, Pet. (Paper 9), 37-41, 49-50; Reply (Paper 28), 4-12

Karppanen and Larson in Combination Disclose a "Solar Energy Reduction Layer"

'142 Patent, claim 6[j]

"one or more solar energy reduction layers located at said transparent cover panel, wherein each of said one or more solar energy reduction layers is configured to prevent a portion of solar energy entering said transparent cover panel from thermally interacting with the circulating gas at said portion of said closed loop gas circulation pathway passing between said transparent cover panel and said electronic image assembly or thermally interacting with said electronic image assembly"

or both surfaces. The auxiliary polarizer **20** is an absorbing polarizer, preferably of a similar type as the front polarizer, and is preferably aligned in the same direction as the front polarizer **8**. Alignment of the polarizers **8**, **20** in the same direction minimizes the attenuation of light coming from the backlight **18**. This allows maximum transmission of the light with little to no attenuation of the light. Reflected light, however, initially passes through the cover glass and is polarized by the auxiliary polarizer **20**. By removing one of the polarizations before it reaches the gap **9**, the reflections from each of the interfaces between the auxiliary polarizer **20** and front polarizer **8** are reduced by around 50%. This allows for reduced overall reflections, or can be used to reduce the reflectance requirements for any antireflection coatings which may be applied to the front and auxiliary polarizers **8**, **20**.

IPR221, Ex. 1005 (Larson), 3:19-34

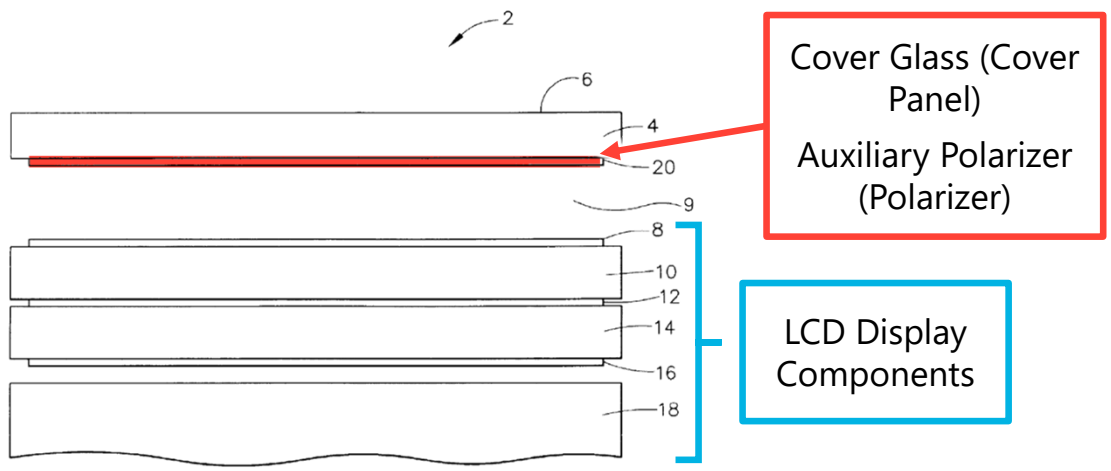

IPR221, Ex. 1005 (Larson), Fig. 2 (annotated)

IPR221, Pet. (Paper 9), 50-52; Ex. 1002 (Smith-Gillespie Decl.), ¶¶ 229-34

Karppanen and Larson in Combination Disclose "a Film Having Anti-Reflection Properties"

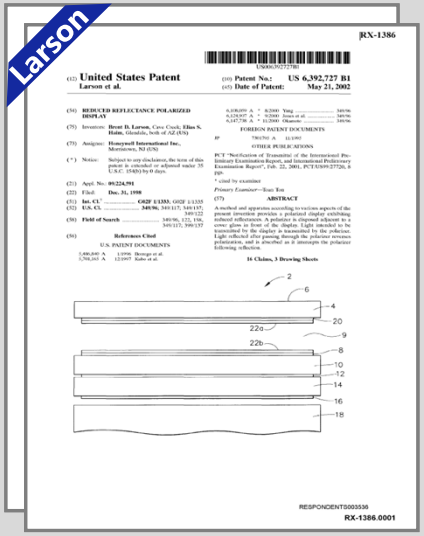

The front polarizer **8**, the rear polarizer **16**, and/or the auxiliary polarizer **20** may also include antireflection material to reduce reflectance. For example, any or all of the polarizers may be coated, plated, or otherwise integrated with or adjacent to an antireflection material. In one

IPR221, Ex. 1005 (Larson), 4:9-13

tances. For example, antireflection coatings **6** may be added to one or both sides of the cover glass **4**, which tends to reduce the reflection from the front of the cover glass **4**.

IPR221, Ex. 1005 (Larson), 1:34-36

A POSITA Would Have Been Motivated to Combine Karppanen and Larson

- ✓ Directed to same field of art: electronic displays
- ✓ Widely known benefits of using solar energy reduction layers, including improving the contrast of the display
- ✓ Not beyond the skill of a POSITA to add a solar energy reduction layer, polarizer, or anti-reflective film
- ✓ Larson does not teach away from using a solar energy reduction layer

IPR221, Pet. (Paper 9), 57-63; Reply (Paper 28), 57-63; Ex. 1002 (Smith-Gillespie Decl.) ¶¶ 126-38

’740 Patent, Ground 2: Obvious in View of Yare

Yare

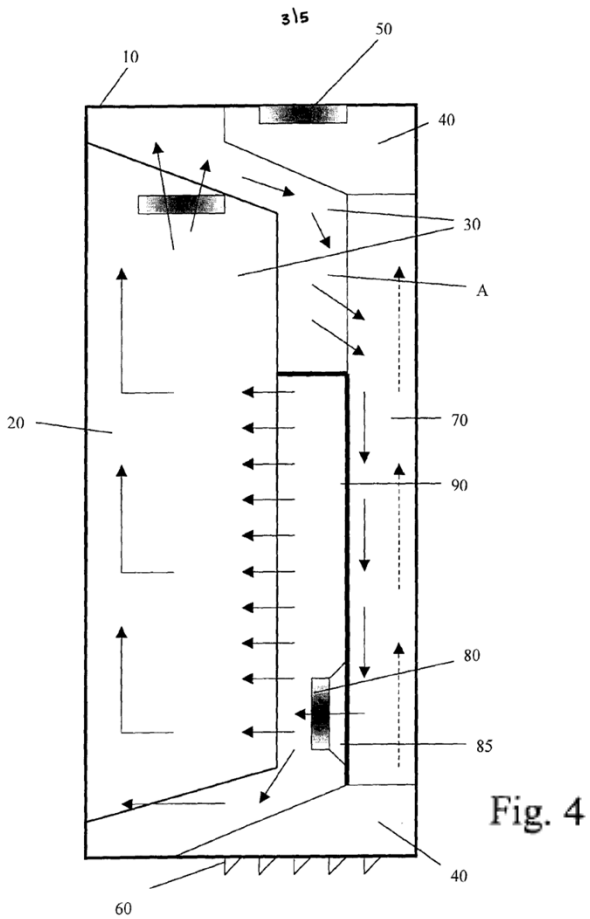

Fig. 4

IPR254, Ex. 1005 (Yare), Fig. 4

In order to provide large display screens, plasma, LCD or rear projection technologies are commonly used. However, such screens can generate a lot of heat and it is therefore essential for them to have an efficient cooling system to remove the heat from the display in order for it to function normally.

Unfortunately, in many public places where there is a large quantity of human or vehicle traffic the cooling system can become clogged with dust, dirt and general pollution. In this situation, the cooling system becomes inefficient and may compromise the functionality of the display by causing it to overheat, resulting in temporary or permanent failure of the display system.

IPR254, Ex. 1005 (Yare), 1:14-17, 19-23

’740 Patent, Ground 2: Yare in View of the Knowledge of a POSITA

Claim Element	Claim Language
1[pre]	An electronic display comprising:
1[a]	an electronic image assembly having a front portion and a rear portion;
1[b]	an open loop ambient air flow path behind the rear portion of the electronic image assembly;
1[c]	a **closed loop gas circulation path about the electronic image assembly**;
1[d]	a common heat exchanger located in the pathway of both the closed loop gas circulation path and the open loop ambient air flow path;
1[e]	a gas circulation device positioned to force circulating gas **through the common heat exchanger**; and
1[f]	an air circulation device positioned to force ambient air **through the common heat exchanger**.

IPR0254, Ex. 1001 (’740 Patent), Claim 1

Yare Discloses a Closed Loop "About the Electronic Image Assembly" and a Front Channel Containing the Closed Loop

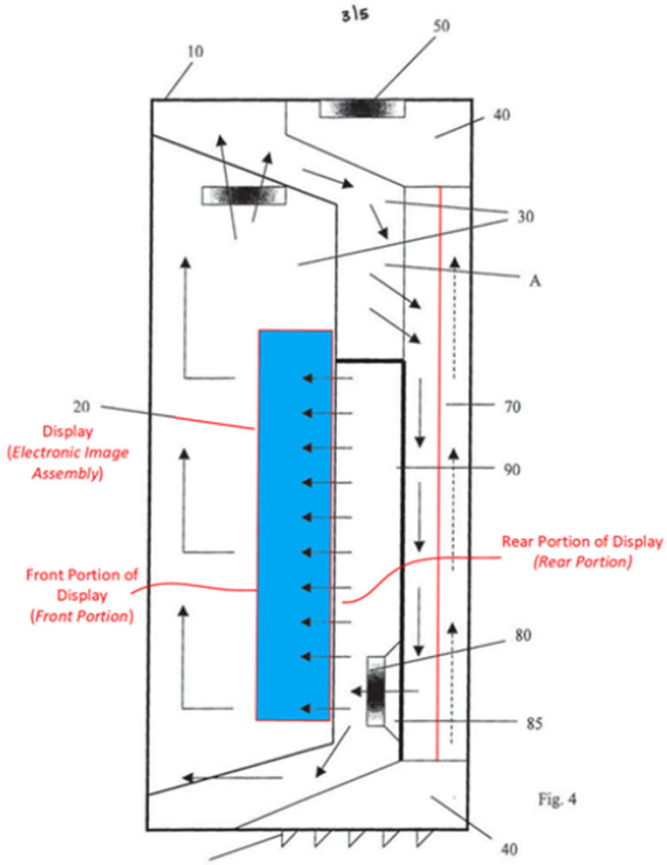

IPR254, Ex. 1005 (Yare), Fig. 4 (annotated)

A cabinet 10 is arranged to contain a display 20 for displaying information, advertisements or other visual media. The display is sealed within the cabinet in a sealed zone 30. In operation, the components of the display 20 create heat inside the display 20 in the sealed zone 30. Vents and other venting means (not shown) allow

IPR254, Ex. 1005 (Yare), 4:4-7

In this manner, the sealed zone 30 is cooled without the ingress of atmospheric air.

IPR254, Ex. 1005 (Yare), 6:1-2

Arrows in Figure 4 illustrate the movement of air in both the atmospheric air zone 40 and in the sealed zone 30 of the cabinet 10 in more detail. Dotted arrows show movement of air in the atmospheric air zone 40 whilst solid arrows show movement of air in the sealed zone 30.

IPR254, Ex. 1005 (Yare), 4:24-27

IPR254, Pet. (Paper 9), 67-70; Reply (Paper 28), 16-17; Ex. 1002 (Smith-Gillespie Decl.) ¶¶ 278-86

It Would Have Been Obvious in View of Knowledge in the Art to Space Yare's Display 20 Back From the Front Cabinet

Referring to FIG. **1**, a conventional polarized display **2**, such as a liquid crystal display (LCD), includes a cover glass **4** having an antireflective coating **6**. A front polarizer **8**, a first substrate **10**, a liquid crystal layer **12**, a second substrate **14**, and a rear polarizer **16** are sandwiched between the cover glass **4** and a backlight **18**. The cover glass **4** is separated from the front polarizer **8** by a gap **9**, typically filled with air. The reflectance at each boundary between the layers adds to the overall reflectance of the display. Reflectances associated with the boundaries between the cover glass **4**, the gap **9**, and the front polarizer **8** are especially pronounced.

IPR254, Ex. 1010 (Larson), 1:22-32

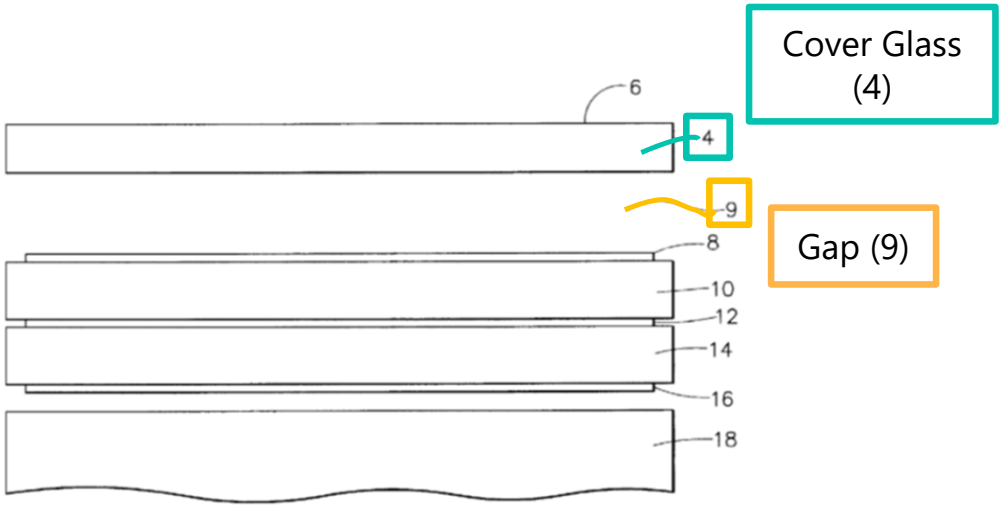

IPR254, Ex. 1010 (Larson), Fig. 1 (annotated)

IPR254, Pet. (Paper 9), 67-70; Reply (Paper 28), 16-17; Ex. 1002 (Smith-Gillespie Decl.) ¶¶ 278-86, 326

It Would Have Been Obvious in View of Knowledge in the Art to Space Yare's Display 20 Back From the Front Cabinet

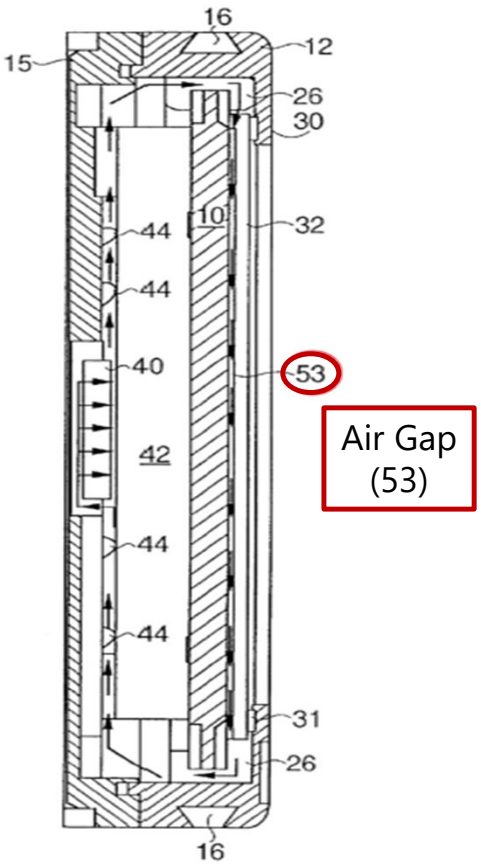

trademark Sorbothane and available from Sorbothane, Inc. A number of discrete, resilient stand-offs **31** mount a touch screen panel **32** in front of the display panel **10**, forming an air gap **53** between the front surface of the display panel and the rear surface of the touch screen panel **32** through which air can be circulated. Preferably, an Electro Magnetic Inter-

Ex. 1012 (Pandolfi), Fig. 3 (annotated), 2:42-47; Ex. 1002 (Smith-Gillespie Decl.) ¶ 327

It Would Have Been Obvious in View of Knowledge in the Art to Space Yare's Display 20 Back From the Front Cabinet

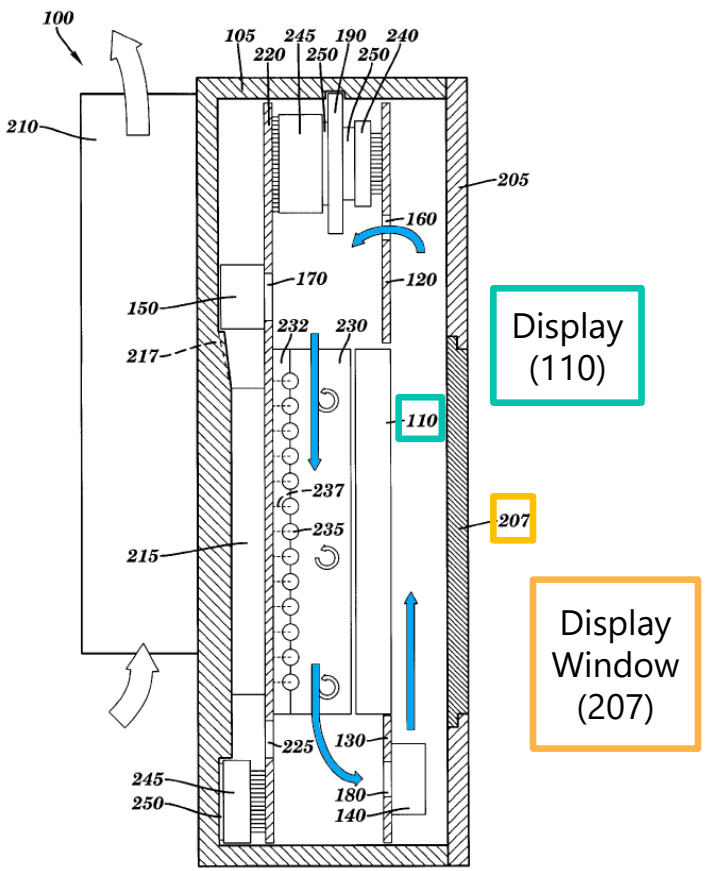

IPR254, Ex. 1013 (Heady), Fig. 3 (annotated)

front fan **140** and each such fan in the set of front fans. Front intake **180** allows front fan **140** when activated to withdraw air from behind lower circuit board **130** and blow it upward in front of electronic display **110**. Front exhaust **160** is

IPR254, Ex. 1013 (Heady), 5:30-33

When face plate **205** not shown in FIG. **1** is secured in place on display housing **105**, a display window **207** (shown in FIG. **2**) will allow viewing of electronic display **110**, while generally obscuring view of the other elements of display unit **100** shown in FIG. **1**. At least, such is the case

IPR254, Ex. 1013 (Heady), 5:49-53

IPR254, Ex. 1002 (Smith-Gillespie Decl.), ¶ 328

To the Extent Yare Does Not Disclose Airflow in the Front of the Display, a POSITA Would Have Been Motivated to Modify Yare

- A POSITA would have known that Yare's display 20 would typically not be in contact with the outer surface of the cabinet 10 to minimize the risk of damage to the display 20 and prevent overheating
- A POSITA would have understood the screen could fog if placed directly adjacent to the front of the cabinet
- Displays with front covers spaced apart from the LCD were well known and conventional

IPR254, Ex. 1002 (Smith-Gillespie Decl.), ¶¶ 283-86; Pet. (Paper 9), 68-69; Reply (Paper 28), 16-17

Yare Discloses the Claimed Heat Exchanger

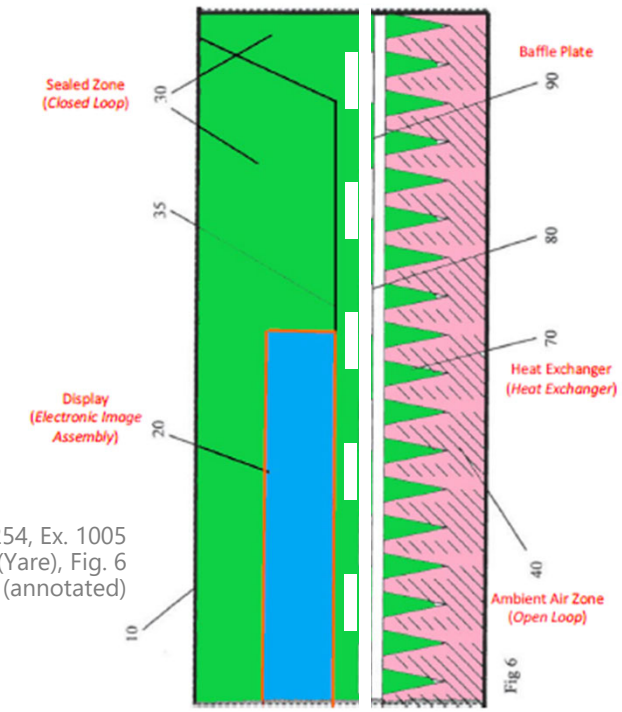

IPR254, Ex. 1005 (Yare), Fig. 6 (annotated)

In the illustrated embodiment of the present invention, the heat exchanger 70 is formed from corrugated metal, thereby increasing the surface area in contact with both the atmospheric air zone 40 and the sealed zone 30. The heat exchanger is sealed at the top and the bottom on the inner side to prevent atmospheric air 110 and the re-circulating air 100 within the sealed zone from mixing.

IPR254, Ex. 1005 (Yare), 6:7-11

Fig. 5

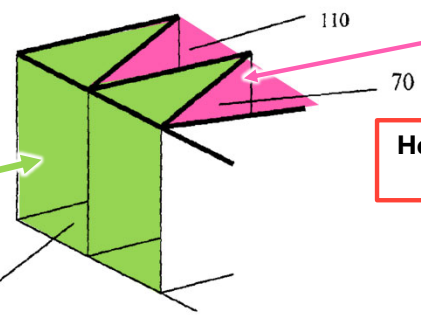

Atmospheric Zone (40)
"Open loop"

Sealed Zone (30)
"Closed loop"

Heat Exchanger (70)

IPR254, Ex. 1005 (Yare), Fig. 5 (annotated)

IPR254, Pet. (Paper 9), 70-73; Reply (Paper 28), 17-18; Ex. 1002 (Smith-Gillespie Decl.) ¶¶ 287-89

Yare Discloses a Gas Circulation Device Forcing Gas Through the Heat Exchanger

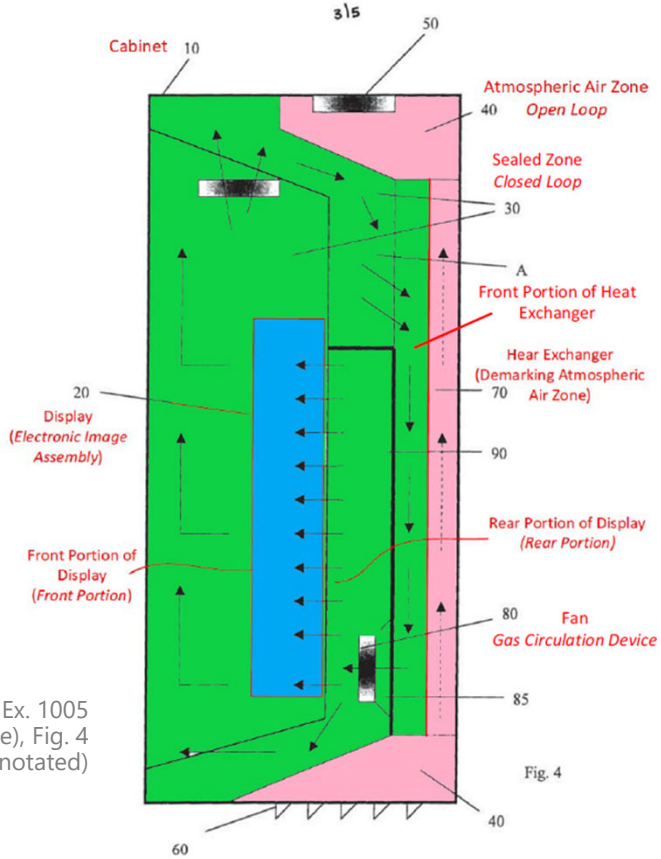

IPR254, Ex. 1005 (Yare), Fig. 4 (annotated)

Air is circulated within the sealed zone 30 due to operation of the fans 80 within the cabinet and fans 25 within the display 20. Air coming into contact with hot components of the display 20 absorbs some of the heat. Due to operation of the fans 25 and 80 and orientation of the baffle plate 90, air within the sealed zone 30 is directed along one or more surfaces of the heat exchanger 70 around the baffle plate 90. Heat is transferred by the heat exchanger 70 from hot air in the sealed zone 30 to cooler atmospheric air within the atmospheric air zone 40. Heated air in the atmospheric air zone 40 is eventually ejected from the cabinet via exhausts in the fans 50.

IPR254, Ex. 1005 (Yare), 5:1-10

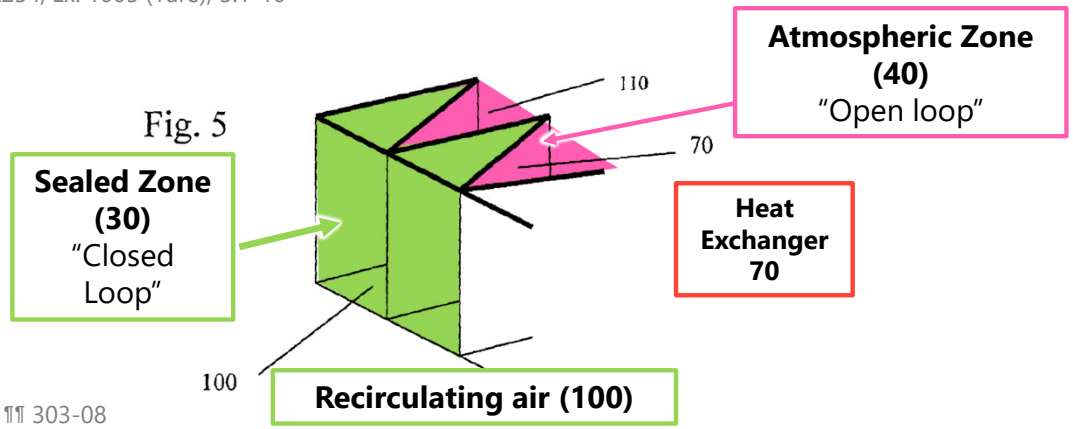

IPR254, Pet. (Paper 9), 73-76; Reply (Paper 28), 17-18; Ex. 1002 (Smith-Gillespie Decl.) ¶¶ 303-08

Yare Discloses an Air Circulation Device Forcing Air Through the Heat Exchanger

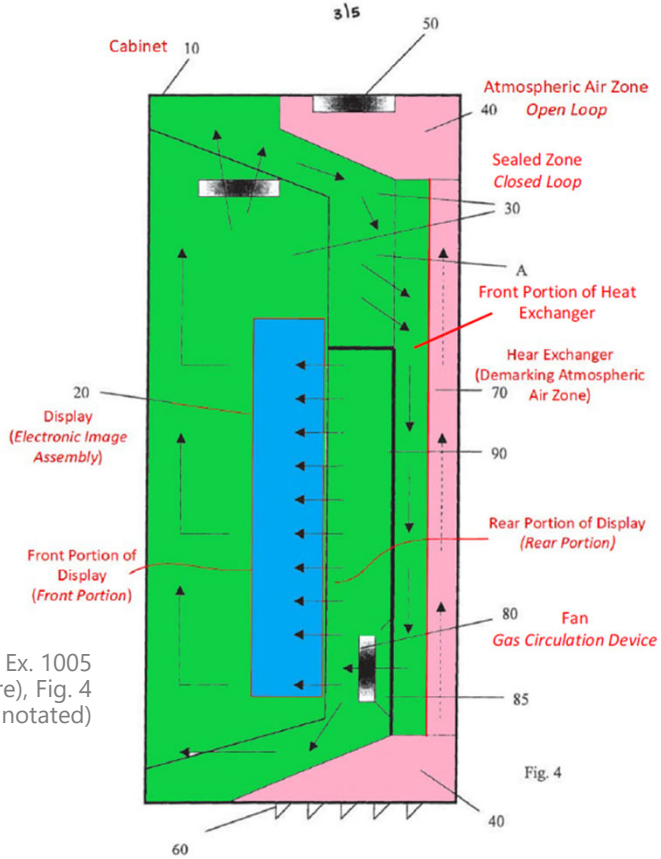

IPR254, Ex. 1005 (Yare), Fig. 4 (annotated)

The cabinet 10 also includes an atmospheric air zone 40. Air from the outside of the cabinet 10 is drawn through vents 60 into the atmospheric air zone 40 by fans 50. The fans 50 draw the air up through the atmospheric air zone 40. The air is then expelled from the cabinet 10 through the fans 50. Arrows in figures 2 and 3 show the passage of air through the vents 60 into the atmospheric air zone 40 and out through the fans 50, respectively.

IPR254, Ex. 1005 (Yare), 4:11-16

Fig. 5

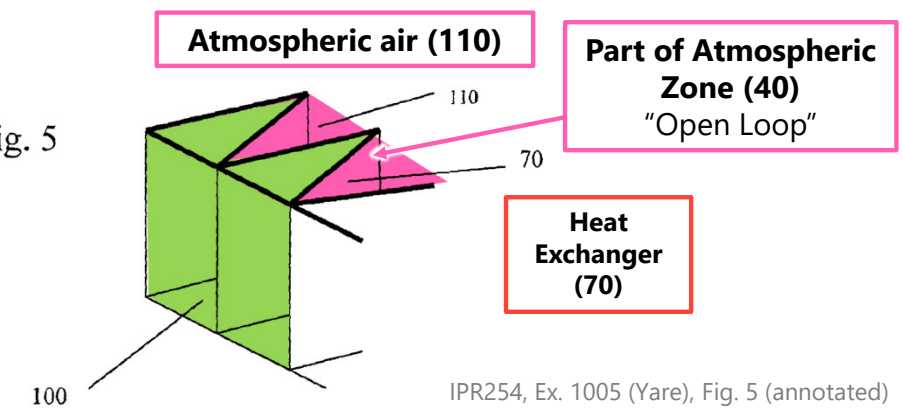

IPR254, Ex. 1005 (Yare), Fig. 5 (annotated)

IPR254, Pet. (Paper 9), 76-80; Reply (Paper 28), 17-18; Ex. 1002 (Smith-Gillespie Decl.) ¶¶ 303-08

It Would Have Been Obvious in View of Knowledge in the Art to Modify Yare's Heat Exchanger

The evidence shows it would have been obvious to modify Yare's heat exchanger in view of knowledge in the art

- MRI briefly argues it would have been beyond the skill of a POSITA to modify Yare's heat exchanger (IPR254, Paper 17 (POR), 47)
  - MRI's citation to Wellhöfer's vague disclosure that "standard heat exchangers" have "proven to be unsuitable" due to "inflexible design" does not support its contention

IPR254, Pet. (Paper 9), 75-76, 78-80; Ex. 1002 (Smith-Gillespie Decl.) ¶¶ 296-302, 307-08

’142 Patent, Ground 2: Obvious in View of Yare and Larson

’142 Patent, Ground 2: Yare and Larson

Claim Element	Claim Language
6[pre]	A cooling system for an electronic image assembly, the cooling system comprising:
6[a]	a housing for the electronic image assembly;
6[b]	a transparent cover panel forming a front portion of the housing, the transparent cover panel located forward of, and at least some distance from, the electronic image assembly;
6[c]	an open loop airflow pathway passing through the housing behind the electronic image assembly;
6[d]	a closed loop gas circulation pathway contained within the housing, **wherein a portion of said closed loop gas circulation pathway passes between said transparent cover panel and said electronic image assembly**;
6[e]	an inlet located at a first portion of said housing for ingesting ambient air into said open loop airflow pathway;
6[f]	an exhaust located at a second portion of said housing for exhausting said ambient air from said open loop airflow pathway;
6[g]	an air circulation device positioned along said open loop airflow pathway between said inlet and said exhaust, wherein said air circulation device is configured to force said ambient air through the open loop airflow pathway when activated;
6[h]	a gas circulation device positioned along said closed loop gas circulation pathway to force circulating gas around the closed loop gas circulation pathway when activated;
6[i]	a heat exchanger located rearward of the electronic image assembly, **wherein a first portion of said heat exchanger forms part of said open loop airflow pathway, and wherein a second portion of said heat exchanger forms part of said closed loop gas circulation pathway; and**
6[j]	one or more **solar energy reduction layers** located at said transparent cover panel, wherein each of said one or more solar energy reduction layers is configured to prevent a portion of solar energy entering said transparent cover panel from thermally interacting with the circulating gas at said portion of said closed loop gas circulation pathway passing between said transparent cover panel and said electronic image assembly or thermally interacting with said electronic image assembly.

IPR221, Ex. 1001 (’142 Patent), Cl. 6

Yare Discloses the Claimed Closed Loop

’142 Patent, Claim 6[d]	’740 Patent, Claim 1[c], Claim 5	Yare in view of Knowledge of a POSITA
“a closed loop gas circulation pathway contained within the housing, wherein a portion of said closed loop gas circulation pathway passes between said transparent cover panel and said electronic image assembly”	1[c]: “a closed loop gas circulation path about the electronic image assembly” 5: “a front channel defined by the space between the front display surface and the front portion of the electronic image assembly, the front channel forming part of the closed loop gas circulation path”	✓

IPR221, Pet. (Paper 9), 91-93; Reply (Paper 28), 15-16; Ex. 1002 (Smith-Gillespie Decl.) ¶¶ 356-62

Yare Discloses the Claimed Heat Exchanger

’142 Patent	’740 Patent, Claim 1[d]	Yare in view of Larson
Claim 6[i]: “a heat exchanger located rearward of the electronic image assembly, wherein a first portion of said heat exchanger forms part of said open loop airflow pathway, and wherein a second portion of said heat exchanger forms part of said closed loop gas circulation pathway”	“a common heat exchanger located in the pathway of both the closed loop gas circulation path and the open loop ambient air flow path”	✓

IPR221, Pet. (Paper 9), 80-82, 96; Reply (Paper 28), 16-17; Ex. 1002 (Smith-Gillespie Decl.) ¶¶ 328-38, 375-76

Yare in Combination With Larson Discloses A "Solar Energy Reduction Layer" and "Film Having Anti-Reflection Properties"

'142 Patent, claim 6[j]
"one or more solar energy reduction layers located at said transparent cover panel, wherein each of said one or more solar energy reduction layers is configured to prevent a portion of solar energy entering said transparent cover panel from thermally interacting with the circulating gas at said portion of said closed loop gas circulation pathway passing between said transparent cover panel and said electronic image assembly or thermally interacting with said electronic image assembly"

'142 Patent, claim 10
"at least one of said one or more solar energy reduction layers comprise a film having anti-reflection properties"

IPR221, Pet. (Paper 9), 96-98; Ex. 1002 (Smith-Gillespie Decl.) ¶¶ 377-84

A POSITA Would Have Been Motivated to Combine Yare and Larson

- ✓ Directed to same field of art: electronic displays
- ✓ Widely known benefits of using solar energy reduction layers, including improving the contrast of the display
- ✓ Not beyond the skill of a POSITA to add a solar energy reduction layer, polarizer, or anti-reflective film
- ✓ Larson does not teach away from using a solar energy reduction layer

IPR221, Pet. (Paper 9), 101-05; Reply (Paper 28), 18; Ex. 1002 (Smith-Gillespie Decl.), ¶¶ 266-79

Secondary Considerations

No Secondary Considerations of Nonobviousness

Long-Felt but Unmet Need

Failure of Others

Copying

Commercial Success

Industry Praise and Licensing

No Long-Felt but Unmet Need

- No evidence exists that MRI's alleged invention met any long-felt need for outdoor displays
- Prior art such as Karppanen and Yare already disclosed cooling systems for outdoor displays
- Samsung's 2015 White Paper does not evidence an unmet need met by MRI's alleged invention:

> "I think we'll see the day, pretty quickly, where even Mom and Pop stores are replacing the printed posters with digital posters in their windows, because the prices and ease of doing it will reach that point," says Nick Lee, Experimental Engineer with Yesco, a Las Vegas-based specialty display company that has, for years, been designing and building screens built to run and last outdoors.

IPR254, Ex. 2025 (Samsung White Paper), 2

> Understanding, from experience and advice, the many challenges of outdoor displays has limited the number of companies that have chosen to focus on this specialized integration work. There's now a short list of top tier integrators, like Yesco and Vertigo, delivering products and services around the globe.

IPR254, Ex. 2025 (Samsung White Paper), 6

IPR254, Reply (Paper 28), 19; IPR221, Reply (Paper 28), 19

No Failure of Others

- No evidence of Samsung's failure
  - Development timeline alone insufficient to prove "failure"
- No evidence that any products "failed" because they lacked the claimed features
  - *Ormco Corp. v. Align Tech., Inc.*, 463 F.3d 1299, 1313 (Fed. Cir. 2006) ("With respect to 'failures of others,' Align has submitted evidence that, prior to the introduction of the successful Invisalign and RW & B products, other orthodontists had tried and failed to develop a functional, invisible orthodontic system. Again, the evidence does not suggest that these prior attempts failed because the devices lacked the claimed features.")
- Prior art disclosed cooling systems for outdoor displays

IPR254, Reply (Paper 28), 19-20; IPR221, Reply (Paper 28), 19-20

No Copying

- Samsung did not do any competitive analysis until after its products had already been developed
- No evidence that Samsung ever sought to replicate any MRI product features
- Infringement is not copying
  - *Iron Grip Barbell Co., Inc. v. USA Sports, Inc.*, 392 F.3d 1317, 1325 (Fed. Cir. 2004) ("Not every competing product that arguably falls within the scope of a patent is evidence of copying. Otherwise every infringement suit would automatically confirm the nonobviousness of the patent. Rather, copying requires the replication of a specific product").

IPR254, Reply (Paper 28), 20-21; IPR221, Reply (Paper 28), 20-21

No Commercial Success

- Presumption of nexus does not apply
  - Coextensiveness requires more than a showing that claims cover a product that practices the patent
- No evidence that cooling systems drive sales

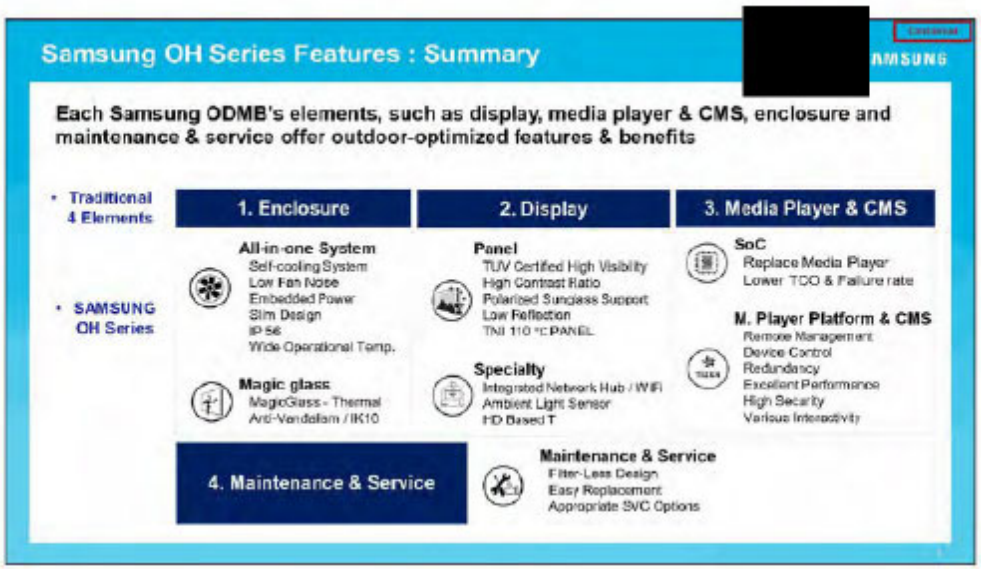

IPR254, Reply (Paper 28), 21-23; IPR221, Reply (Paper 28), 21-23

No Industry Praise or Licensing

- None of MRI's cited evidence establishes industry praise
  - Romulus Stoain of SDS's generic email (Ex. 2001) does not identify any specific MRI product, let alone one coextensive with the Challenged Claims
  - Samsung's 2015 White Paper (Ex. 2025) does not even mention MRI, despite identifying other "top tier" companies in the industry producing outdoor displays
  - Palmer testimony (Ex. 2032) does not indicate whether it is features of Samsung's cooling system, as opposed to other aspects, that leads customers to request Samsung displays
  - As to licensing, MRI fails to establish a nexus between any of its licenses (Exs. 2049, 2051-52) and the Challenged Claims

IPR254, Reply (Paper 28), 23-24; IPR221, Reply (Paper 28), 23-24

’740 Patent: Challenged Claims

Independent Claim 1

What is claimed is:

1. An electronic display comprising:

an electronic image assembly having a front portion and a rear portion;

an open loop ambient air flow path behind the rear portion of the electronic image assembly;

a closed loop gas circulation path about the electronic image assembly;

a common heat exchanger located in the pathway of both the closed loop gas circulation path and the open loop ambient air flow path;

a gas circulation device positioned to force circulating gas through the common heat exchanger; and

an air circulation device positioned to force ambient air through the common heat exchanger.

Claim 2

2. The electronic display of claim **1**, further comprising:

a substantially planar surface located behind and spaced apart from the rear portion of the electronic image assembly; and

a space defined between the rear portion of the electronic image assembly and the substantially planar surface;

wherein the space is in gaseous communication with the open loop ambient air flow path.

Claim 3

3. The electronic display of claim **2**, wherein the substantially planar surface is a plate.

Claim 5

5. The electronic display of claim **1**, further comprising:

a front display surface spaced apart from the front portion of the electronic image assembly; and

a front channel defined by the space between the front display surface and the front portion of the electronic image assembly, the front channel forming part of the closed loop gas circulation path.

Claim 6

6. The electronic display of claim **1**, further comprising at least one electronic component located in the pathway of the closed loop gas circulation path, the at least one electronic component selected from the group consisting of transformers, circuit boards, resistors, capacitors, batteries, power modules, motors, inductors, illumination devices, wiring, wiring harnesses, lights, thermo-electric devices, and switches.

Claim 7

7. The electronic display of claim **1**, further comprising a cooling device placed near an entrance to the open loop ambient air flow path for reducing the temperature of ambient air entering the open loop ambient air flow path.

’740 Patent: Challenged Claims

Independent Claim 8

8. An electronic display comprising:

an electronic image assembly having a front portion and a rear portion;

a closed loop gas circulation path encircling the electronic image assembly;

an open loop ambient air flow path behind the rear portion of the electronic image assembly;

a substantially planar surface located behind and spaced apart from the rear portion of the electronic image assembly, the space between the substantially planar surface and the rear portion of the electronic image assembly defining a rear channel;

a common heat exchanger in gaseous communication with both the closed loop gas circulation path and the open loop ambient air flow path;

at least one fan positioned to force circulating gas through the closed loop gas circulation path;

at least one fan positioned to force ambient air through the open loop ambient air flow path.

Claim 9

9. The electronic display of claim **8**, wherein the open loop ambient air flow path is also in gaseous communication with the rear channel.

Claim 11

11. The electronic display of claim **8**, wherein:

the common heat exchanger includes first and second gas pathways, the first and second gas pathways being

Claim 12

12. The electronic display of claim **11**, wherein the first gas pathway is also in gaseous communication with the rear channel.

Claim 13

13. The electronic display of claim **8**, wherein the substantially planar surface is a plate.

Claim 15

15. The electronic display of claim **8**, further comprising:

a front display surface spaced apart from the front portion of the electronic image assembly; and

a front channel defined by a space between the front display surface and the front portion of the electronic image assembly, the front channel forming part of the closed loop gas circulation path.

Claim 16

16. The electronic display of claim **8**, further comprising at least one electronic component located in the pathway of the closed loop gas circulation path, the at least one electronic component selected from the group consisting of transformers, circuit boards, resistors, capacitors, batteries, power modules, motors, inductors, illumination devices, wiring, wiring harnesses, lights, thermo-electric devices, and switches.

’740 Patent: Challenged Claims

Independent Claim 17

17. A cooling system for an electronic image assembly, comprising:

an open loop ambient air flow path at a rear portion of the electronic image assembly;

a closed loop gas circulation path encircling the electronic image assembly;

a common heat exchanger in gaseous communication with both the closed loop gas circulation path and the open loop ambient air flow path;

a front channel defined by a space between a front portion of the electronic image assembly and a front display surface located forward of and spaced apart from the front portion of the electronic image assembly, the front channel forming a part of the closed loop gas circulation path;

a rear channel defined by a space between the rear portion of the electronic image assembly and a substantially planar surface located behind and spaced apart from the rear portion of the electronic image assembly, the rear channel forming a part of the open loop ambient air flow path;

at least one fan positioned to force circulating gas through the closed loop gas circulation path and the common heat exchanger; and

at least one fan positioned to force ambient air through the open loop ambient air flow path and the common heat exchanger.

Claim 18

18. The cooling system of claim **17**, wherein the substantially planar surface is a plate.

Claim 20

20. The cooling system of claim **17**, further comprising at least one electronic component located in the pathway of the closed loop gas circulation path, the at least one electronic component selected from the group consisting of transformers, circuit boards, resistors, capacitors, batteries, power modules, motors, inductors, illumination devices, wiring, wiring harnesses, lights, thermo-electric devices, and switches.

’142 Patent: Challenged Claims

Independent Claim 1

What is claimed is:

1. A cooling system for an electronic image assembly, the cooling system comprising:

a housing for the electronic image assembly;

a cover panel forming a forward portion of the housing, wherein the cover panel is located forward of, and at least some distance from, the electronic image assembly and is configured to permit viewing of images displayed at the electronic image assembly through said cover panel;

a closed loop airflow pathway passing through the housing, wherein said closed loop airflow passes around said electronic image assembly and is configured to accommodate circulating gas, and wherein at least a portion of said closed loop airflow pathway extends between said electronic image assembly and said cover panel;

an open loop airflow pathway for ambient air passing through said housing and behind said electronic image assembly;

at least one air circulation device positioned to force the circulating gas through the closed loop airflow pathway when activated; and

at least one polarizer located at an inward facing surface of said cover panel and configured to prevent at least some sunlight striking said cover panel from traveling beyond said at least one polarizer.

Claim 2

2. The cooling system of claim **1** further comprising:

at least one film having anti-reflection properties located at said cover panel.

Claim 3

3. The cooling system of claim **1** further comprising:

a heat exchanger located rearward of the electronic image assembly, wherein a first portion of said heat exchanger forms part of said open loop airflow pathway, and wherein a second portion of said heat exchanger forms part of said closed loop airflow pathway.

Claim 4

4. The cooling system of claim **3** further comprising:

an inlet located at a first portion of said housing for ingesting said ambient air into said open loop airflow pathway; and

an exhaust located at a second portion of said housing for exhausting said ambient air from said open loop airflow pathway.

Claim 5

5. The cooling system of claim **1** wherein:

said at least one polarizer comprises a linear polarizer.

’142 Patent: Challenged Claims

Independent Claim 6

6. A cooling system for an electronic image assembly, the cooling system comprising:

a housing for the electronic image assembly;

a transparent cover panel forming a front portion of the housing, the transparent cover panel located forward of, and at least some distance from, the electronic image assembly;

an open loop airflow pathway passing through the housing behind the electronic image assembly;

a closed loop gas circulation pathway contained within the housing, wherein a portion of said closed loop gas circulation pathway passes between said transparent cover panel and said electronic image assembly;

an inlet located at a first portion of said housing for ingesting ambient air into said open loop airflow pathway;

an exhaust located at a second portion of said housing for exhausting said ambient air from said open loop airflow pathway;

an air circulation device positioned along said open loop airflow pathway between said inlet and said exhaust, wherein said air circulation device is configured to force said ambient air through the open loop airflow pathway when activated;

a gas circulation device positioned along said closed loop gas circulation pathway to force circulating gas around the closed loop gas circulation pathway when activated;

a heat exchanger located rearward of the electronic image assembly, wherein a first portion of said heat exchanger forms part of said open loop airflow pathway, and wherein a second portion of said heat exchanger forms part of said closed loop gas circulation pathway; and

one or more solar energy reduction layers located at said transparent cover panel, wherein each of said one or more solar energy reduction layers is configured to prevent a portion of solar energy entering said transparent cover panel from thermally interacting with the circulating gas at said portion of said closed loop gas circulation pathway passing between said transparent cover panel and said electronic image assembly or thermally interacting with said electronic image assembly.

Claim 7

7. The cooling system of claim **6** wherein:

said air circulation device comprises one or more fan assemblies; and

said gas circulation device comprises one or more fan assemblies.

Claim 8

8. The cooling system of claim **6** wherein:

at least one of said one or more solar energy reduction layers comprise a polarizer.

Claim 9

9. The cooling system of claim **8** wherein:

said polarizer comprises a linear polarizer.

Claim 10

10. The cooling system of claim **6** wherein:

at least one of said one or more solar energy reduction layers comprise a film having anti-reflection properties.

Claim 11

11. The cooling system of claim **6** wherein:

at least a first one of said one or more solar energy reduction layers comprise a polarizer; and

at least a second one of said one or more solar energy reduction layers comprise a film having anti-reflection properties.

’142 Patent: Challenged Claims

Independent Claim 12

12. A method for cooling an electronic image assembly, said method comprising the steps of:

placing said the electronic image assembly within a housing;

forcing circulating air through a closed loop airflow pathway within said housing, wherein at least a portion of said closed loop airflow pathway extends between an electronic image assembly and a cover panel forming a front portion of said housing and spaced apart from said electronic image assembly, wherein said cover panel is configured to permit viewing of images displayed at the electronic image assembly through said cover panel;

forcing ambient air through a second airflow pathway within said housing, wherein said second airflow pathway extends behind said electronic image assembly; and

providing one or more solar energy reduction layers at an inward facing surface of said cover panel, wherein each of said one or more solar energy reduction layers is configured to reduce an amount of solar energy transferred to said circulating air in at least said portion of said closed loop airflow pathway.

Claim 13

13. The cooling method of claim 12 wherein:

at least one of said one or more solar energy reduction layers comprise a polarizer.

Claim 14

14. The cooling method of claim 13 wherein:

at least one of said one or more solar energy reduction layers comprise a film having anti-reflection properties.

Claim 15

15. The cooling method of claim 12 further comprising the steps of:

thermally transferring heat between said circulating air in said closed loop airflow pathway and said ambient air in said second airflow pathway at a heat exchanger common to said closed loop airflow pathway and said second airflow pathway.

CERTIFICATE OF SERVICE

Pursuant to 37 C.F.R. §§ 42.6(e) the undersigned hereby certifies that on March 13, 2024 (per party agreement) and March 15, 2024 **"PETITIONERS' HEARING DEMONSTRATIVES"** were served upon lead counsel for Patent Owner, pursuant to Patent Owner's agreement to accept such service by email as set forth in Patent Owner's Mandatory Notices.

John C. Alemanni – jalemanni@kilpatricktownsend.com

Carl Sanders – csanders@kilpatricktownsend.com

Michael T. Morlock – mmorlock@kilpatricktownsend.com

Courtney Dabbiere – cdabbiere@kilpatricktownsend.com

David A. Reed – dreed@kilpatricktownsend.com

Andrea A. Anderson – andie.anderson@ktslaw.com

Dated: March 15, 2024

/*Sanjeet K. Dutta*/

Sanjeet K. Dutta (Reg. No. 46,145)
GOODWIN PROCTER LLP
601 Marshall Street
Redwood City, California 94063
Email: sdutta@goodwinlaw.com
Tel.: +1 (650) 752-3100
Fax: +1 (650) 853-1038

Lead Counsel for Petitioner