UNITED STATES PATENT AND TRADEMARK OFFICE

BEFORE THE PATENT TRIAL AND APPEAL BOARD

SAMSUNG ELECTRONICS CO., LTD. AND SAMSUNG ELECTRONICS AMERICA, INC.

Petitioner

v.

MANUFACTURING RESOURCES INTERNATIONAL, INC.,

Patent Owner

U.S. Patent No. 10,506,740

Filing Date: October 20, 2017
Issue Date: December 10, 2019

Title: Electronic Display with Cooling

Inter Partes Review No. IPR2023-00254

PATENT OWNER'S NOTICE OF APPEAL

Pursuant to 35 U.S.C. §§ 141, 142, and 319; 28 U.S.C. § 1295; 37 C.F.R. §§ 90.2–90.3; Federal Rule of Appellate Procedure 15; and Federal Circuit Rule 15, Patent Owner Manufacturing Resources International, Inc ("Patent Owner") hereby gives notice that it appeals to the United States Court of Appeals for the Federal Circuit from the Patent Trial and Appeal Board's Final Written Decision dated June 18, 2024 (Paper 52), and from all underlying findings, orders, decisions, rulings, and opinions adverse to Patent Owner, including, without limitation, those underlying the Final Written Decision. A copy of the public Final Written Decision is attached to this Notice.

In accordance with 37 C.F.R. 90.2(a)(3)(ii), Patent Owner further notes that the issues on appeal include all issues decided adversely to Patent Owner in any orders, decisions, rulings, and opinions. This will likely include, but is not limited to:

1. The Board's determination that Petitioner established that claims 1-3, 5-9, 11-13, 15-18, and 20 of U.S. Patent No. 10,506,740 are unpatentable under 35 U.S.C. § 103, and any finding or determination (factual or legal) supporting that determination;
2. The Board's claim constructions, including but not limited to its constructions of "closed loop" and "heat exchanger";
3. Whether the Board erred in its consideration of objective indicia of

nonobviousness, including without limitation its determination of insufficient nexus between the challenged claims and Patent Owner's evidence of secondary considerations; and

4. Whether the Board erred in any finding or determination supporting or relating to the above-referenced issues and any other issues decided adversely to Patent Owner in any orders, decisions, rulings, or opinions of the Board.

In accordance with 37 C.F.R. 90.2(a)(1), copies of this Notice of Appeal are being filed simultaneously with the Patent Trial and Appeal Board and with the Director of the United States Patent and Trademark Office. In addition, this Notice of Appeal, along with the required docketing fees, is being filed electronically with the Clerk of the United States Court of Appeals for the Federal Circuit.

Dated: August 15, 2024

By: */John C. Alemanni/*
John C. Alemanni
Reg. No. 47,384
Lead Counsel for Patent Owner

CERTIFICATE OF FILING AND SERVICE

I hereby certify that, in addition to being filed electronically through the Patent Trial and Appeal Board's P-TACTS System, the original version of the foregoing **PATENT OWNER'S NOTICE OF APPEAL** was filed on this 15th day of August, 2024, with the Director of the United States Patent and Trademark Office, by emailing the email address indicated on United States Patent and Trademark Office's web page for the Office of the General Counsel, and by Express Mail at the following address:

Director of the United States Patent and Trademark Office
c/o Office of the General Counsel
United States Patent and Trademark Office
P.O. Box 1450
Alexandria, Virginia 22313-1450.

The undersigned also hereby certifies that a true and correct copy of the foregoing **PATENT OWNER'S NOTICE OF APPEAL** and the filing fee is being filed via the electronic filing system, CM/ECF, with the United States Court of Appeals for the Federal Circuit on August 15, 2024, and one true and correct copy of the foregoing was sent by Express Mail on this 15th day of August, 2024 to the Clerk's Office of the United States Court of Appeals for the Federal Circuit, at the following address:

Office of the Clerk
United States Court of Appeals for the Federal Circuit
717 Madison Place, N.W., Suite 401
Washington, DC 20439

The undersigned hereby certifies that on the date below a copy of this **PATENT OWNER'S NOTICE OF APPEAL** was served on Petitioners by filing through the P-TACTS System and by electronic delivery via email to the following:

Sanjeet Dutta – sdutta@goodwinlaw.com
Douglas J. Kline – dkline@goodwinlaw.com
Srikanth Reddy – sreddy@goodwinlaw.com
Naomi L. Birbach – nbirbach@goodwinlaw.com

Dated: August 15, 2024

/ John C. Alemanni /
John C. Alemanni
Reg. No. 47,384
Counsel for Patent Owner

Trials@uspto.gov
571-272-7822

Paper 52
Entered: June 18, 2024

UNITED STATES PATENT AND TRADEMARK OFFICE

BEFORE THE PATENT TRIAL AND APPEAL BOARD

SAMSUNG ELECTRONICS CO., LTD. and SAMSUNG ELECTRONICS AMERICA, INC.,
Petitioner,

v.

MANUFACTURING RESOURCES INTERNATIONAL, INC.
Patent Owner.

IPR2023-00254
Patent 10,506,740 B2

Before JAMESON LEE, JO-ANNE M. KOKOSKI, and JOHN A. HUDALLA, *Administrative Patent Judges.*

LEE, *Administrative Patent Judge*.

JUDGMENT
Final Written Decision
Determining All Challenged Claims Unpatentable
35 U.S.C. § 318(a)

I. INTRODUCTION

We instituted an *inter partes* review of claims 1–3, 5–9, 11–13, 15–18, and 20 ("challenged claims") of U.S. Patent No. 10,506,740 B2 (Ex. 1001, "the '740 patent") owned by Manufacturing Resources International, Inc. ("Patent Owner"). Paper 11 ("Decision to Institute" or "Inst. Dec."). We have authority to conduct this *inter partes* review under 35 U.S.C. § 6. This Final Written Decision is issued pursuant to 35 U.S.C. § 318(a) and 37 C.F.R. § 42.73. We determine that Samsung Electronics Co., Ltd. and Samsung Electronics America Inc. ("Petitioner") have proven by a preponderance of the evidence that claims 1–3, 5–9, 11–13, 15–18, and 20 of the '740 patent are unpatentable.

A. Background

Petitioner filed a Petition requesting an *inter partes* review of the challenged claims pursuant to 35 U.S.C. §§ 311–319. Paper 3. Patent Owner filed a Preliminary Response. Paper 7 ("Prelim. Resp."). With authorization from the Board, and as agreed to by Patent Owner, Petitioner filed a Corrected Petition (Paper 9) that does not change the substance of what was initially filed, without need for Patent Owner to file any revision to the Preliminary Response. The Corrected Petition substitutes for and replaces the initially filed petition. Hereinafter, we refer to the Corrected Petition as "Petition" or "Pet."

The Decision to Institute was entered on June 20, 2023. Paper 11. Thereafter, Patent Owner filed a confidential Response (Paper 17, "PO Resp."), and Petitioner filed a confidential Reply (Paper 28, "Reply"). These papers are sealed because we granted respective motion to seal by the parties directed to portions of Patent Owner's Response, portions of

Petitioner's Reply, and certain exhibits relied on in the Patent Owner Response and/or Petitioner's Reply. Paper 45. The public redacted version of the Patent Owner Response is Paper 33, and the public redacted version of Petitioner's Reply is Paper 35. Patent Owner filed a public Sur-reply. Paper 37. We also granted the parties' joint motion for entry of a stipulated protective order to govern the handling of confidential information. Paper 45. A copy of the entered protective order is Paper 46.

Additionally, we granted Petitioner's Motion to Submit Supplemental Information that is U.S. International Trade Commission ("ITC")'s "Notice of a Commission Determination Not to Review a Final Initial Determination Finding No Violation of Section 337; Termination of the Investigation" in related proceeding before the ITC, i.e., ITC Inv. No. 337-TA-1331. Paper 47. The Notice has been entered as Exhibit 1045.

A consolidated oral hearing was held on March 20, 2024, for this proceeding and related proceeding IPR2023-00221. The hearing transcript has been entered as Paper 51.

B. Real Parties in Interest

Petitioner identifies Samsung Electronics Co., Ltd, Samsung Electronics America, Inc., Samsung SDS Co., Ltd., Samsung SDS America, Inc., Coates Signco Pty Limited, Coates US Inc., and Industrial Enclosure Corporation d/b/a Palmer Digital Group as the real parties in interest. Pet. 2. Patent Owner identifies itself as the real party in interest. Paper 5, 2.

C. Related Matters

Each party identifies the following district court litigation involving the '740 patent as a related matter: *Manufacturing Resources, Inc. v.*

Samsung Electronics Co., Ltd. et al., No. 2:22-cv-00320 (E.D. Tex.). Pet. 2; Paper 5, 2. Each party identifies the following proceeding before the ITC involving the '740 patent as a related matter: *In re Certain Outdoor and Semi-Outdoor Electronic Displays, Products Containing Same, and Components Thereof*, Investigation No. 337-TA-1331. Pet. 2; Paper 5, 2.

Petitioner also refers to a district court proceeding involving related patents: *Manufacturing Resources, Inc. v. Civiq Smartscapes, LLC. et al.*, No. 17-269-RGA (D. Del.) ("the Delaware action"). Pet. 11 (citing Ex. 1026[1], 1).

Petitioner and Patent Owner both identify the following *inter partes* review proceedings before the Board as being directed to related patents: IPR2023-00199, IPR2023-00220, and IPR2023-00221. Pet. 2–3; Paper 5, 2. Patent Owner additionally identifies IPR2023-00255 as being directed to a related patent. Paper 5, 2.

D. The '740 Patent

The '740 patent relates to an electronic display including an electronic image assembly and a cooling system for electronic displays. Ex. 1001, code (57); 1:55–57. The disclosed embodiments include two separate flow paths for gas through an electronic display. *Id.* at 2:37–38. The first flow path is a closed loop and the second flow path is an open loop. *Id.* at 2:38–40. The '740 patent describes:

> The closed loop path travels across the front surface of the image assembly, continues to the rear of the display where it may enter a heat exchanger, finally returning to the front surface of the image assembly. The open loop path may draw ambient gas (ex.

[1] Petitioner mistakenly cites to Exhibit 1023, but the context makes clear that Petitioner intended to cite Exhibit 1026.

> ambient air) through the rear of the display (sometimes through a heat exchanger, behind an image assembly, or both) and then exhausts it out of display housing. A heat exchanger may be used to transfer heat from the circulating gas to the ambient gas. In alternative embodiments, the ambient gas may also be forced behind the image assembly (sometimes a backlight), in order to cool the image assembly and/or backlight assembly (if a backlight is necessary for the particular type of display being used).

Id. at 2:40–53. Figure 2A is reproduced below:

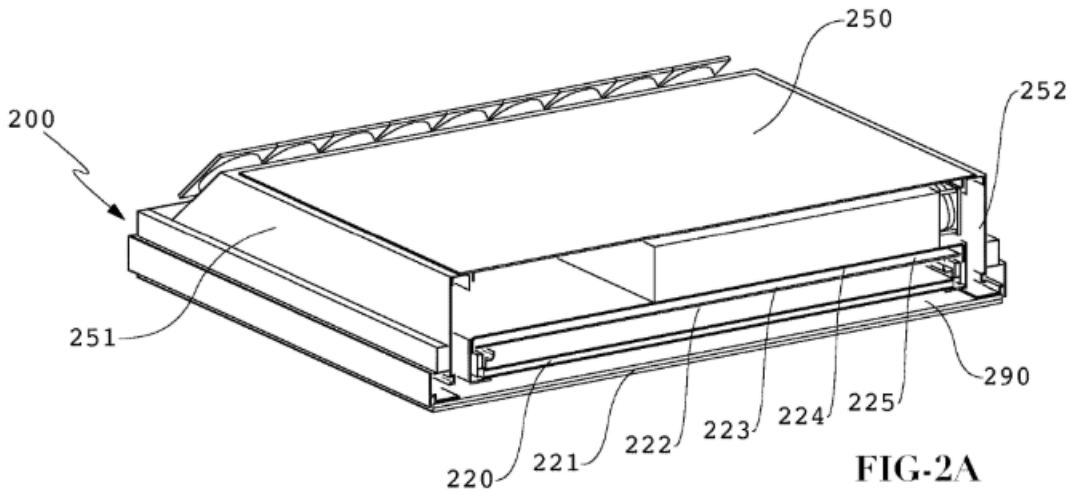

Figure 2A is a perspective sectional view of an embodiment showing the closed loop and open loop channels in a cooling system for an electronic display. Ex. 1001, 3:1–2.

Rear cover 250 and side covers 251 and 252 together seal overall display 200. *Id.* at 5:48–50. Image assembly 220 is near the front of display 200. *Id.* at 5:50–51. Image assembly 220 may be an LCD, light emitting diode (LED), organic light emitting diode (OLED), field emitting displays (FED), light emitting polymers (LEP), plasma displays, or any other flat/thin display. *Id.* at 5:5–57. Front display surface 221, optionally comprising several layers for polarizing light to reduce glare or reflections, may be made of any transparent material and is placed in front of image

assembly 220, defining channel 290 through which a circulating gas may flow. *Id.* at 5:57–64. The '740 patent refers to channel 290 as a "*closed loop channel.*" *Id.* at 6:4–5 (emphasis added).

Figure 2B is reproduced below:

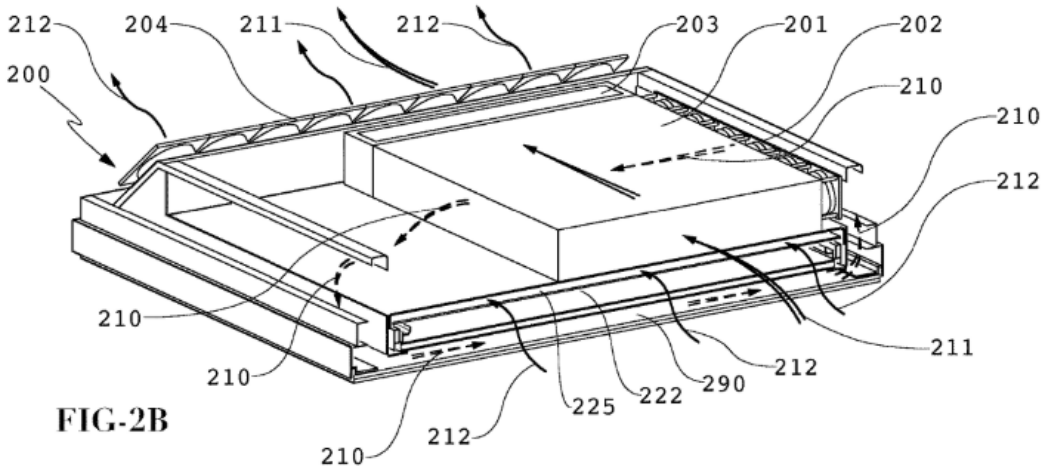

Figure 2B is a perspective sectional view similar to Figure 2A but with rear and side covers removed. Ex. 1001, 3:3–5.

The '740 patent describes that closed loop fan assembly 202 may be used to propel circulating gas 210 around the closed loop. Ex. 1001, 6:34–35. The '740 patent explains: "The closed loop path travels across the front surface of the image assembly, continues to the rear of the display where it may enter a heat exchanger, finally returning to the front surface of the image assembly." *Id.* at 2:40–43.

The '740 patent describes that open loop fan assembly 203 may be used to draw ambient gas 211 through heat exchanger 201 and exhaust ambient gas 211 that has traveled through heat exchanger 201. Ex. 1001, 6:35–37, 6:46–48. It explains:

> The open loop path may draw ambient gas (ex. ambient air) through the rear of the display (sometimes through a heat exchanger, behind an image assembly, or both) and then exhausts it out of the display housing. A heat exchanger may be used to transfer heat from the circulating gas to the ambient gas.

Id. at 2:43–48. The '740 patent states that "[a] cross-flow heat exchanger may be used in an exemplary embodiment." *Id*. at 2:53–54.

There may be an optional additional open channel 225. *Id.* at 6:37–41. Image assembly 220 may be an LCD stack with backlight assembly 222 which has rear surface 223. *Id.* at 6:10–22. A second surface 224 may be placed behind rear surface 223. *Id.* at 6:23–25. "The space between the rear surface 223 of the backlight and the second surface 224 may define an additional optional *open loop channel 225* through which ambient gas may travel in order to cool the backlight assembly 222 (or image assembly 220 if no backlight is used)." *Id.* at 6:25–30 (emphasis added). An additional optional open loop fan assembly may be used to exhaust ambient gas which has traveled through optional open channel 225. *Id.* at 6:37–41. The '740 patent describes that ambient gas 211 and 212 do not mix with circulating gas 210. *Id.* at 6:49–50.

Figure 3 is reproduced below:

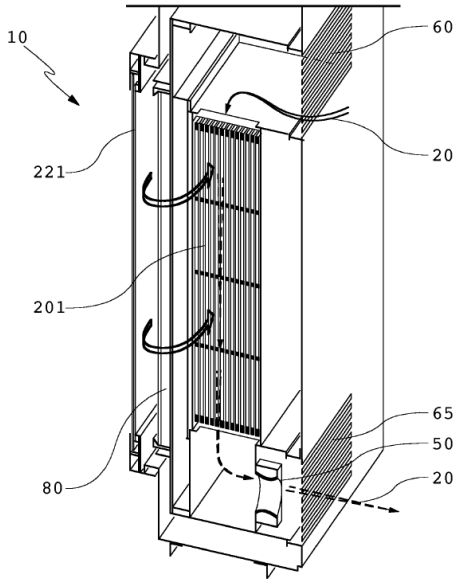

Figure 3 is a perspective sectional view of an embodiment where ambient gas is ingested only into the heat exchanger and not other channels. Ex. 1001, 3:6–8.

Figure 3 shows inlet 60 and exhaust apertures 65 for ambient gas 20. *Id.* at 6:60–62. Fans 50 draw ambient gas 20 into inlet aperture 60 and through heat exchanger 201. *Id.* at 6:65–67. In this embodiment, the image assembly is designated by reference numeral 80 rather than reference numeral 220 as in Figures 2A and 2B. *Id.* at 7:2–7. The '740 patent describes: "This heat may be transferred to the circulating gas as it passes through the channel between the front display surface 221 and the image assembly 80, where this heat may then be transferred to the ambient gas 20 and expelled from the display." *Id.* at 7:30–34.

Claims 1, 8, and 17 are independent and reproduced below:[2]

[1pre] An electronic display, comprising:

[1a] an electronic image assembly having a front portion and a rear portion;

[1b] an open loop ambient air flow path behind the rear portion of the electronic image assembly;

[1c] a closed loop gas circulation path about the electronic image assembly;

[1d] a common heat exchanger located in the pathway of both the closed loop gas circulation path and the open loop ambient air flow path;

[1e] a gas circulation device positioned to force circulating gas through the common heat exchanger; and

[1f] an air circulation device positioned to force ambient air through the common heat exchanger.

Ex. 1001, 9:54–67.

[8pre] An electronic display, comprising:

[8a] an electronic image assembly having a front portion and a rear portion;

[8b] a closed loop gas circulation path encircling the electronic image device;

[8c] an open loop ambient air flow path behind the rear portion of the electronic image assembly;

[8d] a substantial planar surface located behind and spaced apart from the rear portion of the electronic image assembly, the space between the substantial planar surface and the rear portion of the electronic image assembly defining a rear channel;

[2] The bracketed captions correspond to those used by Petitioner to reference the claim elements. *See* Pet. 112–117. We use them here for ease of reference, understanding, and consistency.

[8e] a common heat exchanger in gaseous communication with both the closed loop gas circulation path and the open loop ambient air flow path;

[8f] at least one fan positioned to force gas through the closed loop gas circulation path;

[8g] at least one fan positioned to force air through the open loop ambient air flow path.

Id. at 10:32–50.

[17pre] A cooling system for an electronic image assembly, comprising;

[17a] an open loop ambient air flow path at a rear portion of the electronic image assembly;

[17b] a closed loop gas circulation path encircling the electronic image assembly;

[17c] a common heat exchanger in gaseous communication with both the closed loop gas circulation path and the open loop ambient air flow path; and

[17d] a front channel defined by a space between a front portion of the electronic image assembly and a front display surface located forward of and spaced apart from the front portion of the electronic image assembly, the front channel forming a part of the closed loop gas circulation path;

[17e] a rear channel defined by a space between the rear portion of the electronic image assembly and a substantially planar surface located behind and spaced apart from the rear portion of the electronic image assembly, the rear channel forming a part of the open loop ambient air flow path;

[17f] at least one fan positioned to force circulating gas through the closed loop gas circulation path and the common heat exchanger;

[17g] at least one fan positioned to force ambient air through the open loop ambient air flow path and the common heat exchanger.

Id. at 11:20–12:16.

E. References relied on by Petitioner and Declarations

Petitioner relies on the following references:[3]

Name	Patent Document	Exhibit
Karppanen[4]	WO 2007/116116 A1	1004
Yare[5]	UK 2,402,205 A	1005

In citing to Karppanen and Yare, we refer to the actual page numbers of the references rather than the Bates numbers added by Petitioner.

Petitioner also relies on the Declaration of Robert Smith-Gillespie. Ex. 1002. Patent Owner relies on the Declaration of Himanshu Pokharna, Ph.D. Ex. 2024.

F. Asserted Grounds of Unpatentability

Petitioner asserts that the challenged claims of the '740 patent are unpatentable based on the following grounds:

[3] The '740 patent issued from Application No. 15/789,331, filed Oct. 20, 2017, which claims priority to a long chain of ancestral applications including, *inter alia*, Provisional Application No. 61/138,736, filed Dec. 18, 2008, Provisional Application No. 61/033,064, filed Mar. 3, 2008, and Provisional Application No. 61/095,616, filed Sept. 9. 2008. *Id.*, codes (21), (22), (60). Petitioner has not challenged the '740 patent's entitlement to the earlier filing date of any ancestral application.
[4] Published October 18, 2007. Ex. 1004, code (43).
[5] Application published December 1, 2004. Ex. 1005, code (43).

Claims Challenged	35 U.S.C. §[6]	Reference(s)/Basis
1–3, 5–9, 11–13, 15–18, 20	103	Karppanen
1–3, 5, 6, 8, 9, 11–13, 15–18, 20	103	Yare

Pet. 5.

II. ANALYSIS

A. Level of Ordinary Skill in the Art

Petitioner asserts that a person of ordinary skill in the art ("POSITA") as of March 3, 2008,

> would have possessed a bachelor's degree in a pertinent discipline, such as mechanical engineering, physics, product design, or a related field. (Ex. 1002, ¶ 39.) Such a person would also have 2–4 years of experience in working with electronic displays and have an understanding of product design issues and failure modes associated with electronic displays. (*Id.*) Alternatively, a POSITA would have had 5–7 years of experience in the field working with electronic displays and have a similar understanding of product design issues and failure modes associated with electronic displays. (*Id.*)

Pet. 6 (citing Ex. 1002 ¶ 39).

Patent Owner asserts its understanding of the level of ordinary skill:

> A POSITA would possess a bachelor's degree in a pertinent discipline, such as mechanical or electrical engineering, physics, applied physics, or a related field. Such a person would also have had 2–4 years of experience in working with electronic

[6] The Leahy-Smith America Invents Act, Pub. L. No. 112–29, 125 Stat. 284 (2011) ("AIA"), amended 35 U.S.C. §§ 102 and 103. Based on the record before us, the '740 patent has an effective filing date prior to the effective date of the applicable AIA amendments (March 16, 2013). Therefore, we refer to the pre-AIA version of 35 U.S.C. § 103.

> displays including thermal management associated with electronic displays. Alternatively, a POSITA would have had 4–6 years of experience in the field and would have developed a similar understanding of thermal management associated with electronic displays.

PO Resp. 6.

Patent Owner argues:

> Petitioner proposes a POSITA definition that includes "industrial designers" as persons with ordinary skill and does not require any special experience or knowledge of a thermal management of the electronic displays. Petition at 11. Instead, under Petitioner's definition, it is sufficient that a POSITA have a generalized knowledge of "product design issues and failure modes associate[d] with electronic displays." *Id*. This definition is overly inclusive, and sweeps in individuals who clearly fall short of the ordinary skill necessary to ascertain the thermal management systems disclosed in the '740 Patent, including individuals who design the external housing of displays (e.g. bus shelters), electrical outlet of the display, or computer hardware. Such mechanisms are not components of the cooling system for electronic displays, which is the subject matter of the '740 Patent. '740 Patent, 1:55-57.

PO Resp. 7. We do not discern a meaningful difference between the definitions of Petitioner and Patent Owner. In a deposition in the related ITC proceeding, Mr. Smith-Gillespie was asked the following question by Patent Owner's counsel:

> When you refer to a degree in product design, are you referring to a degree in industrial design, or are you referring to some type of engineering degree?

Ex. 2022, 72:2–5.

Mr. Smith-Gillespie answered as follows:

> I would say product design is more of an engineering-type discipline, which would be inclusive of mechanical and electrical design. There are degree programs like that.

Ex. 2022, 72:6–9. With that understanding of "product design," the two definitions, insofar as formal education is concerned, are essentially the same.

With regard to experience, the suggested distinction between Patent Owner's language "thermal management associated with electronic displays" and Petitioner's language "failure modes associated with electronic displays" is not supported by meaningful explanation and is at best inconclusive.

Patent Owner also argues that Mr. Smith-Gillespie contradicted himself regarding his alleged inclusion of "industrial design" as a suitable education background:

> In his declaration, Smith-Gillespie opines that the definition of a POSITA includes an industrial designer. *See* Ex. 1002 (Smith-Gillespie Dec.) ¶39. However, when deposed in February, two months after submitting his declaration, Smith-Gillespie stated that he no longer believed that an industrial designer fell within the scope of an ordinarily skilled artisan in the field of art. *See* Ex 2022 (Smith-Gillespie Tr. (Feb. 10, 2023)) at 73:3–7 ("Q. Okay. So an industrial designer, as we just described, would not qualify based on that educational background as a person of ordinary skill in the art, under your definition; is that right? A. That's correct.").

PO Resp. 8–9. The problem with Patent Owner's argument is that in his declaration Mr. Smith Gillespie refers to a degree in "product design," not "industrial design." Ex. 1002 ¶ 39. Thus, there is no inconsistency.

We adopt Petitioner's articulation of the level of ordinary skill in the art. This determination of the level of ordinary skill in the art is consistent with what is reflected by the content of the applied prior art references. *Cf. Okajima v. Bourdeau*, 261 F.3d 1350, 1354–55 (Fed. Cir. 2001) (the applied prior art may reflect an appropriate level of skill). Further, our obviousness conclusions would be no different even if Patent Owner's articulation of the level of ordinary skill in the art is adopted.

B. Claim Construction

We use the same claim construction standard that would be used to construe a claim in a civil action under 35 U.S.C. § 282(b), including construing the claim in accordance with the ordinary and customary meaning of such claim as understood by one of ordinary skill in the art and the prosecution history pertaining to the patent. 37 C.F.R. § 42.100(b) (2022). The claim construction standard set forth in *Phillips v. AWH Corp.*, 415 F.3d 1303 (Fed. Cir. 2005) (en banc) is applicable.

Claim terms are generally given their ordinary and customary meaning as would be understood by one with ordinary skill in the art in the context of the specification, the prosecution history, other claims, and extrinsic evidence including expert and inventor testimony, dictionaries, and learned treatises, although extrinsic evidence is less significant than the intrinsic record. *Phillips*, 415 F.3d at 1312–17. Usually, the specification is dispositive, and it is the single best guide to the meaning of a disputed term. *Id.* at 1315.

The specification may reveal a special definition given to a claim term by the patentee, or the specification or prosecution history may reveal an intentional disclaimer or disavowal of claim scope by the inventor. *Id.*

at 1316. If an inventor acts as his or her own lexicographer, the definition must be set forth in the specification with reasonable clarity, deliberateness, and precision. *Renishaw PLC v. Marposs Societa' per Azioni*, 158 F.3d 1243, 1249 (Fed. Cir. 1998). The disavowal, if any, can be effectuated by language in the specification or the prosecution history. *Poly-Am., L.P. v. API Indus., Inc.*, 839 F.3d 1131, 1136 (Fed. Cir. 2016).

Only those claim terms that are in controversy need to be construed, and only to the extent necessary to resolve the controversy. *Realtime Data, LLC v. Iancu*, 912 F.3d 1368, 1375 (Fed. Cir. 2019) ("The Board is required to construe 'only those terms . . . that are in controversy, and only to the extent necessary to resolve the controversy.'" (quoting *Vivid Techs., Inc. v. Am. Sci. & Eng'g, Inc.*, 200 F.3d 795, 803 (Fed. Cir. 1999))).

The parties put forth arguments related to the claim terms "closed loop" and "heat exchanger," as we discuss below. Neither party has proposed an express construction for any other term. We find that no express claim construction of any other claim term is necessary to reach our decision in this proceeding.

1. "closed loop"

The term "closed loop" is recited in each independent claim. Petitioner asserts that in the Delaware action , the district court construed "closed loop" as "gas pathway within a display housing containing gas that is essentially isolated from external air." Pet. 11 (citing Ex. 1026, 1). Petitioner asserts that the district court's construction is the proper construction, in light of the specification and the prosecution history of the '740 patent. *Id.* at 11–12.

Petitioner explains:

> The '740 patent refers to the gas/air, circulating through a closed loop as the circulating gas/air and also as the "isolated gas." (Ex. 1001, 9:64–10:3, 10:7–9, 10:56–58, 11:30–12:6 (claims reciting circulating gas/air), 3:30–[39], 3:50–52 (specification referring to gas in the closed loop as "circulating gas" and "isolated gas"), FIG. 1.)
>
> Moreover, as noted above, the Applicant distinguished the claims from the Thielemans prior art based on the argument that the closed loop must be separate from and in addition to the open loop. (Ex. [1031], pp. 44-45, 160 (Responses filed on 01/07/2019 and 08/15/2019).) The Court's "closed loop" construction should apply here, though Applicant notes that this claim construction does not affect the applicability of the prior art in this Petition because the art teaches the separate loops.

Id. at 12.

Petitioner's characterization of the prosecution history with respect to the Thielemans reference is inaccurate. Our review of the cited portions of the prosecution history reveals that the Applicants did not argue to the Examiner that the closed loop and the open loop must be isolated from each other and cannot mix. Rather, the Applicants argued that Thielemans discloses having an open loop or a closed loop, not both an open loop and a closed loop. Ex. 1031, 44–45, 160. The Applicants also argued that Thielemans's closed loop is not "about" and is not "encircling" the electronic image assembly. *Id.* at 160. The cited prosecution history does not support Petitioner's assertion.

Patent Owner explains that the ITC in the related investigation rejected Petitioner's proposed construction and noted that the '740 patent specification specifically states that the closed loop and open loop need not be isolated from each other. PO Resp. 9 (citing Ex. 1033, 48). Indeed, the

'740 patent states: "Although not required, it is preferable that the circulating gas and ambient gas do not mix." Ex. 1001, 4:15–16. The '740 patent also states: "Since gas for the open loop may contain various contaminants, a *preferable* embodiment should be adequately sealed to prevent the gas from the two loops from mixing." *Id*. at 6:53–56 (emphasis added). The '740 patent additionally explains that keeping the gas from the two loops from mixing "is not necessary however, as filters (either removable or permanent) may be used to minimize the effect of particulate for both the open and closed loops." *Id*. at 6:56–59. Thus, we determine that isolation of the closed loop and the open loop is preferable, not mandatory.

For the foregoing reasons, Petitioner's arguments regarding "closed loop" are not persuasive. We reject Petitioner's contention that a "closed loop" must be essentially isolated from external air. As explained above, that construction is contrary to the express disclosures of the specification of the '740 patent and not required by any of Applicants' representation during prosecution noted by Petitioner. We need not express any further view on the meaning of "closed loop." We apply the plain and ordinary meaning for "closed loop."

2. "heat exchanger"

The term "heat exchanger" is recited in each of independent claims 1, 8, and 17. Petitioner in its Petition did not construe the term and states that aside from the term "closed loop," all other terms from the '740 patent should be given their plain and ordinary meaning. Pet. 12.

Patent Owner states that it agrees with Petitioner that "heat exchanger" should be given its plain and ordinary meaning, but asserts that

the plain and ordinary meaning of "heat exchanger" as would have been understood by one of ordinary skill in the art "is the specific type of thermal management devices referred to as a 'heat exchanger.'" PO Resp. 11. In particular, Patent Owner states: "The '740 Patent specification describes a heat exchanger consistent with the understanding of a POSITA as *a device that uses alternating, enclosed channels or tubes of fluid*." PO Resp. 11 (emphasis added). Thus, according to Patent Owner, whatever Petitioner relies on to meet "heat exchanger" must include alternating, enclosed channels or tubes. Petitioner disagrees. Reply 5–12. For reasons discussed below, we are persuaded by Petitioner that a heat exchanger may, but does not have to, include enclosed channels or tubes. Patent Owner's construction is too narrow and not supported by the record evidence.[7]

a) Patent Owner's Construction is Against Usage in the Art

U.S. Patent 8,758,144 B2 (Ex. 1007, "Williams") was introduced by Petitioner's expert, Mr. Smith-Gillespie, in his declaration in a paragraph about what heat exchangers were known in connection with cooling displays, and noted in Petitioner's Reply. Reply 12; Ex. 1002 ¶ 140.

[7] Patent Owner also asserts that Petitioner attempts to read "heat exchanger" as anything that exchanges heat. PO Resp. 15 (citing Pet. 12–14). We disagree. We find no such assertion on the cited portion of the Petition. During the oral hearing, counsel for Petitioner stated, consistent with the Petition: "We actually do not take the position that a heat exchanger is anything under the sun." Paper 51, 12:4–5; *see id*. at 17:12–16.

Figure 1C of Williams is reproduced below:

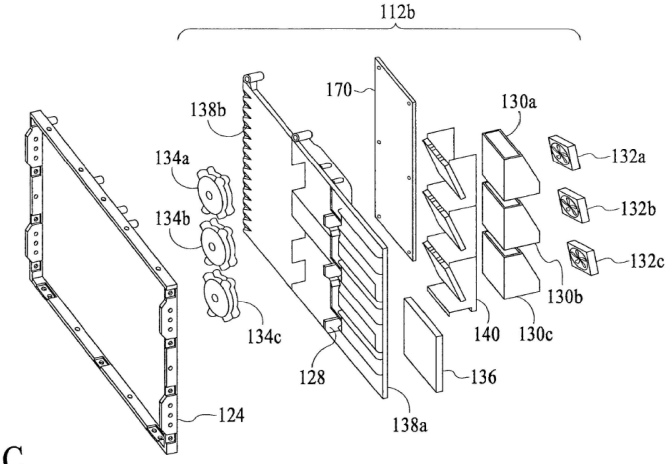

FIG.1C

Figure 1C is an exploded perspective view of various components within Williams's backlighting system. Ex. 1007, 2:50–52.

Williams expressly refers to elements 130a, 130b, and 130c, coupled to heat "exchange bracket 140," as "heat exchangers" even though they are without enclosed channels or tubes. Ex. 1007, 6:29–30. We note further that according to the Final Initial Determination of the ITC in the related proceeding before the ITC, Patent Owner's expert, Dr. Pokharna, "agreed" before the ITC that Williams "uses a heat exchanger." Ex. 1035, 253. However, whether Dr. Pokharna agreed that Williams discloses a heat exchanger is inconsequential, because it is indisputable that Williams describes elements 130a, 130b, and 130c, which are clearly without enclosed channels or tubes, as "heat exchangers." *Id*. at 6:29–30.

Yare is a prior art reference asserted by Petitioner in the instant case. Ex. 1005. Figure 5 of Yare is reproduced below:

Fig. 5

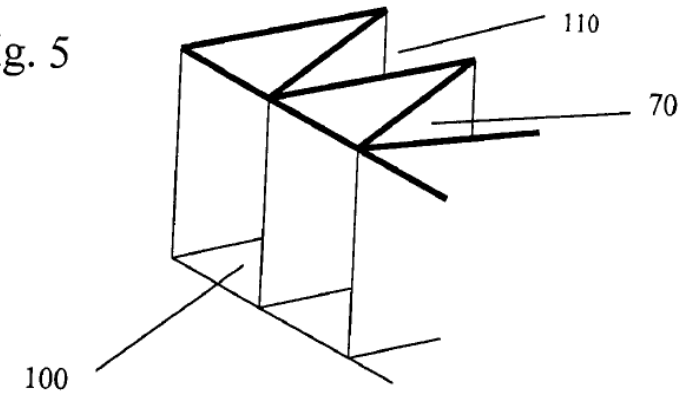

Figure 5 is a perspective view of a part of Yare's heat exchanger. Ex. 1005, 3:28–29.

Despite the fact that illustrated component 70, made of corrugated metal, is without an enclosed channel or tube, Yare refers to it as "heat exchanger." Ex. 1005, 6:7–11. Yare further states that heat exchanger 70 could be flat plates. *Id*. at 6:14–16. Patent Owner has not disputed that Yare refers to its element 70 as "heat exchanger."

Nagashima (U.S. Patent No. 6,789,655 B2 (Ex. 2020)) is a reference shown to Dr. Pokharna during cross-examination. Reply 6. Figure 6A of Nagashima is reproduced below:

FIG. 6A

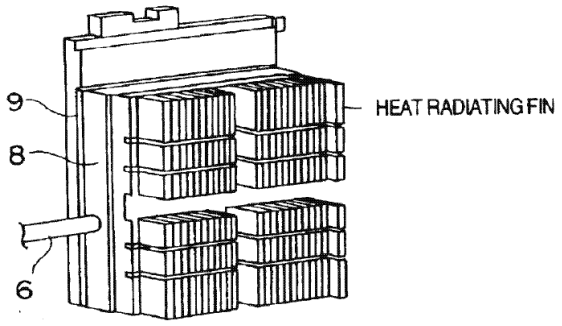

Figure 6A illustrates a sample configuration for cooling a central processing unit (CPU). Ex. 2020, 3:8–10.

Nagashima states that "the embodiment shown in FIG. 6 aims at radiating by liquid cooling an extra heat that cannot be radiated from the heat radiating fin provided on the heat receiving head." Ex. 2020, 7:9–12.

Figure 6B of Nagashima is reproduced below:

FIG. 6B

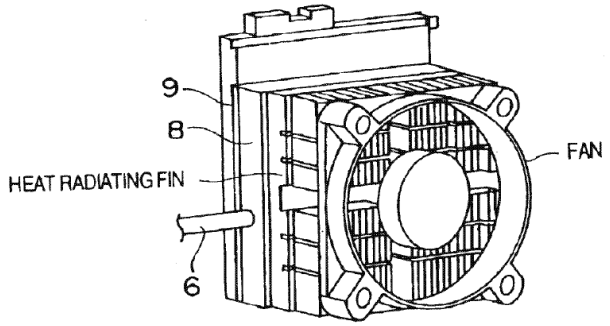

Figure 6B illustrates a sample configuration, including a fan, for air cooling a central processing unit (CPU). Ex. 2020, 3:8–10.

Nagashima states that "FIG. 6B shows a construction in which a fan is further provided on the heat radiating fin on the heat receiving head. The provision of the ventilating fan realizes the effective and rapid radiation of heat from the heat radiating fin." Ex. 2020, 7:16–19.

Patent Owner's expert, Dr. Pokharna, was asked on cross examination how one of ordinary skill would have understood the direction of airflow generated by the fan in Nagashima's Figure 6B. Dr. Pokharna answered that the direction of airflow "will go through *the heat exchanger* and then [it] finds its way out of the chassis" even though the radiating fin of Nagashima does not include any enclosed channel or tube. Ex. 1037, 41:23–42:9 (emphasis added). Dr. Pokharna's acknowledgment that Nagashima's radiating fin is a "heat exchanger" undermines Patent Owner's suggestion that a heat exchanger must include enclosed channels or tubes.

Equally significant, if not more, is Patent Owner's express acknowledgement that "skilled artisans may colloquially refer to an object that is exchanging heat as a heat exchanger." PO Resp. 26 (citing Ex. 2024 ¶ 96). Dr. Pokharna acknowledges that, as used in the art, the term "heat exchanger" sometimes has a meaning broader than systems that utilize channels of flowing fluid to transfer heat between two fluid streams, and that "persons of skill in the art will sometimes refer to a device that moves heat as a heat exchanger." Ex. 2024 ¶ 96. These acknowledgements by Patent Owner and Patent Owner's expert support Petitioner's position that a "heat exchanger" does not have to have enclosed channels or tubes.

Petitioner further relies on the prosecution history of the '740 patent, noting that the Examiner had applied heat sink element 22 in the form of a heat transporting plate, which did not have enclosed channels or tubes, in U.S. Pat. Pub. No. 2004/0135482 ("Thielemans" (Ex. 1030)) as the claimed "common heat exchanger," and the Applicants did not dispute that characterization by the Examiner. Reply 9 (citing Ex. 1031, 237–47; Ex. 1030 ¶ 49). Figure 1a of Thielemans is reproduced below:

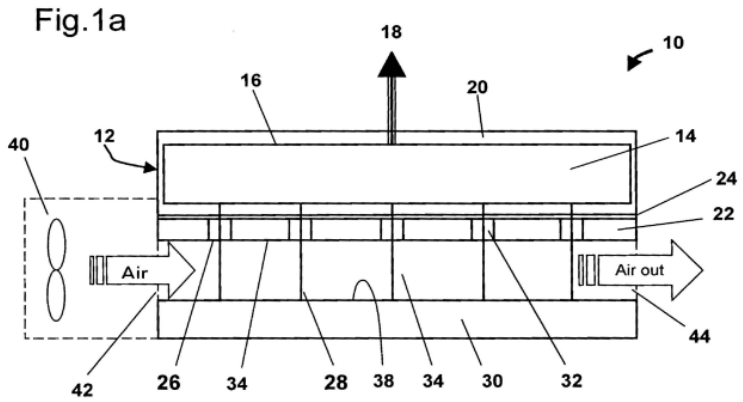

Figure 1a is a schematic diagram of a section through a flat panel display of Thielemans. Ex. 1030 ¶ 33.

Patent Owner explains that Applicants' decision not to address the Examiner's analysis merely reflected Applicants' decision to focus on other deficiencies of Thielemans. PO Resp. 27. We agree with Patent Owner that Applicants' actions (or inactions) do not substantiate Applicants' agreement with the Examiner in that regard. However, the Examiner's application of element 22, disposed adjacent a forced air flow and without an enclosed channel or tube, as a heat exchanger, still undermines Patent Owner's assertion that a heat exchanger must have enclosed channels or tubes. This position of the Examiner is consistent with the usage shown above in the context of Williams, Yare, and Nagashima.

Patent Owner also cites to several printed publications in support of its contention that a "heat exchanger" must have closed tubes or channels: (1) Dave S. Steinberg, COOLING TECHNIQUES FOR ELECTRONIC EQUIPMENT (2d ed. 1991) (Ex. 1020, "Steinberg"); (2) Allan W. Scott, COOLING ELECTRONIC EQUIPMENT (1974) (Ex. 1019, "Scott"); and (3) Frank Incropera et al., *Chapter 11 Heat Exchangers*, FUNDAMENTALS OF HEAT AND MASS TRANSFER, at 669–707 (2006) (Ex. 2017, "Incropera"). PO Resp. 14. Patent Owner alleges that Steinberg "distinguish[es] a heat sink (chapter 3 on conduction) and plates with fins (chapter 5) from a heat exchanger which contains channels for airflow (chapter 6)." *Id*. Patent Owner also alleges that Scott "distinguish[es] forced air cooling over fins in chapter four from heat exchangers in chapter 5." *Id*. With respect to Incropera, Patent Owner asserts that it "confirmed heat exchangers were known thermal management devices that had specific structural features of closed tubes or channels" (PO Resp. 14), but justifies the assertion only by noting the following testimony of Dr. Pokharna before the ITC:

> So the heat exchanger [Incropera] describes first as exchanging heat between two fluid streams that are not mixed together. And it goes on to explain various kinds of heat exchangers in the introduction itself. That is what is called a shell-and-tube heat exchanger. []
>
> You have a bank of tubes that have one fluid going through it, something, let's say, that you need to cool. And around there is the other fluid that is going around it to enhance the heat transfer without mixing these two fluids.
>
> But of particular interest here I want to mention are these two kinds of configurations that are shown here at the bottom, which are curiously similar to the structures that we saw in the '740 and '142 application.

Ex. 2015, 1251:7–23 (cited at PO Resp. 14).

These assertions of Patent Owner are unavailing. They are overly general and lack meaningful explanation.

For instance, Incropera describes: "The process of heat exchange between two fluids that are at different temperatures and separated by a solid wall occurs in many engineering applications. The device used to implement this exchange is termed a heat exchanger . . . ." Ex. 2017, 670. Incropera continues to describe that a "common configuration" for a heat exchanger, is "the *shell-and-tube* heat exchanger" *Id*. at 676. That, however, does not mean a shell-and-tube configuration is the only configuration for a heat exchanger. Patent Owner has not identified any part of Incropera which clearly conveys that a "heat exchanger" must have or must be formed of enclosed channels or tubes.

Patent Owner also provides no explanation or analysis as to how Scott allegedly "distinguish[es] forced air cooling over fins in chapter four from heat exchangers in chapter 5." PO Resp. 14. In fact, the excerpt of Scott

cited by Patent Owner (Ex. 1019) does not even include Chapter 5. Thus, the record does not support Patent Owner's assertions regarding Scott.

As for Steinberg, Patent Owner has not articulated why or how the subject matter covered in Steinberg's different chapters is delineated in the mutually exclusive manner suggested by Patent Owner. For example, in subsection 6.23, Steinberg refers to "multiple fin heat exchangers, as shown in Figure 4.2," contained within the sidewalls of a chassis. Ex. 1020, 220. Figure 4.2 of Steinberg is reproduced below:

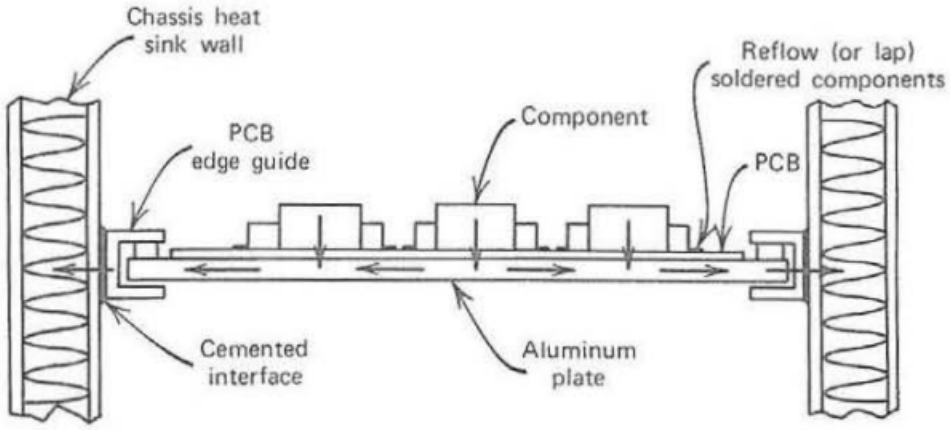

Figure 4.2 Conduction heat flow path from component to heat sink.

Figure 4.2 shows heat flow path to a heat sink (Ex. 1020, 79).

Steinberg describes: "The heat can then flow along the PCBs [printed circuit boards] to the air cooled side walls of the chassis, which *contain* multiple fin heat exchangers, as shown in Figure 4.2." Ex. 1020, 220 (emphasis added). Thus, the side walls are not a part of the heat exchanger. The fins do not have enclosed channels or tubes and, yet, Steinberg refers to the fins as "multiple fin heat exchangers." Such disclosure shows that there may be overlap between fins and heat exchangers, and that a heat exchanger

need not have enclosed channels or tubes but may consist solely of fins, so long as there is air flow across the fins.

We note further that Patent Owner's expert, Dr. Pokharna, testifies that "[h]eat exchangers are *typically* enclosed in a casing and contain separate channels for multiple fluid pathways." Ex. 2024 ¶ 62. But what is typical, by definition, is not always the case, as is exemplified by the disclosed structures discussed above in Williams, Yare, Nagashima, Thielemans, and Steinberg.

b) The Specification Shows No Special Definition or Disavowal and Does not Support Patent Owner's Construction

In support of its arguments regarding the construction of "heat exchanger," Patent Owner cites certain evidence in the specification and prosecution history of the '740 patent. *See* PO Resp. 11–13. But Patent Owner has not alleged that the inventors of the '740 patent acted as their own lexicographer and conveyed their own definition of "heat exchanger" in the specification of the '740 patent, and there is no such special definition in the specification of the '740 patent.

Patent Owner identifies two provisional applications in the ancestral history of the '740 patent: (1) Provisional Application No. 61/138,736 ("'736 Provisional"), filed December 18, 2008; and (2) Provisional Application No. 61/033,064 ("'064 Provisional"), filed March 3, 2008. PO Resp. 11–12. Patent Owner asserts that the '736 Provisional is the first application in the chain of priority of the '740 patent "to disclose and teach the integration of a heat exchanger." *Id.* at 11.

We agree that the '736 Provisional is the first application in the chain of priority of the '740 patent to use the words "heat exchanger," but that

does not necessarily mean the '736 Provisional is the first application in the priority chain to disclose use of a heat exchanger. It also does not rise to the level of clarity needed for a disavowal, i.e., that only the specifically disclosed structures in the '736 Provisional or the '740 patent specification, with enclosed channels or tubes, are heat exchangers and that all other structures are not a heat exchanger.

Disavowal can be effectuated by language in the specification or the prosecution history. *Poly-America, L.P. v. API Indus., Inc.*, 839 F.3d 1131, 1136 (Fed. Cir. 2016). "In either case, the standard for disavowal is exacting, requiring clear and unequivocal evidence that the claimed invention includes or does not include a particular feature." *Id.* There is no such clarity in the circumstances here. Neither the '736 Provisional nor the '740 patent conveys with clarity that structures without enclosed channels or tubes are not heat exchangers.

Patent Owner produces an annotated version of Figure 7 of the '064 Provisional, reproduced below (PO Resp. 12):

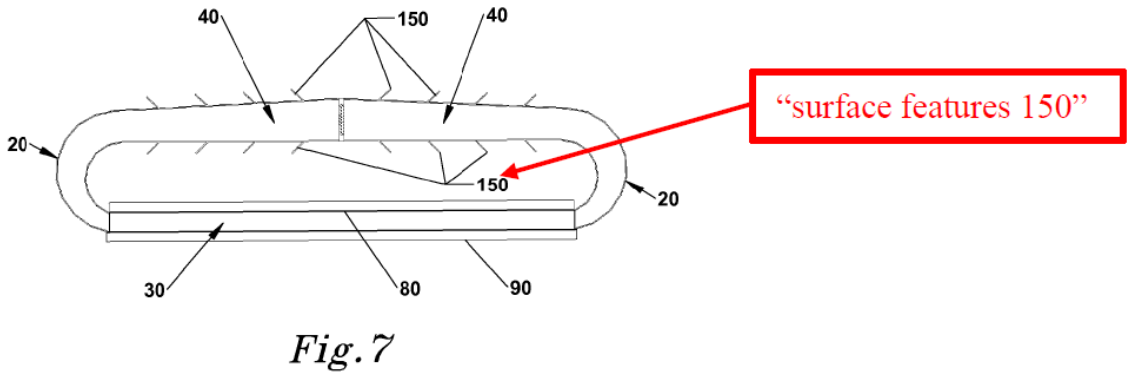

Figure 7 is a top plan view of an exemplary embodiment illustrating surface features that may be included on a plenum. Ex. 2011 ¶ 18. Patent Owner has identified "surface features 150" with a red call-out box.

Patent Owner asserts: "Petitioner's expert agrees that the '064 Provisional Application does not describe a heat exchanger." PO Resp. 13 (citing Ex. 2021, 73:13–74:8). We disagree with that characterization of Mr. Smith-Gillespie's testimony. That characterization, for reasons discussed below, is distorted.

Mr. Smith-Gillespie was asked a question about paragraph 42 of the '064 Provisional: "Does this paragraph 42 describe a heat exchanger?" Ex. 2021, 73–74. Paragraph 42 of the '064 Provisional is reproduced below:

> As can be discerned in Figs. 6 and 7, various surface features 150 may be added to improve heat dissipation from the plenum 45. These surface features 150 provide more surface area to radiate heat away from the gas within the second gas chamber 40. These features 150 may be positioned at numerous locations on the surface of the plenum 45.

Ex. 2011 ¶ 42. Mr. Smith-Gillespie answered as follows:

> More likely, defines a heat sink. There's fins on the outsides of this cooling chamber, 40, and it's just flat plate on the other side. So the typical usage of – of the term "heat sink."
>
> So what I'm seeing is 50 is – 150, item 150 is an array of heat sinks affixed to the surface of rear cooling chamber, 40.

Ex. 2021, 74:4–12.

We disagree with Patent Owner's characterizations of Mr. Smith-Gillespie's testimony. Mr. Smith-Gillespie testified that paragraph 42 of the '064 Provisional describes a "heat sink," which is not the same thing as denying that it describes a "heat exchanger." *See* Ex. 2021, 73–74. Indeed, Patent Owner's characterizations of Mr. Smith-Gillespie's testimony are tied to its argument (addressed below) that a heat sink cannot be a "heat exchanger." We do not agree with that argument, as discussed in further detail below.

Patent Owner additionally asserts that commercial sources for thermal management devices "classify heat exchangers separately from other devices such as heat sinks, heat pipes and finned surfaces." PO Resp. 15 (citing Ex. 2024 ¶ 61). The argument is unavailing, because Dr. Pokharna does not cite to supporting evidence for his testimony that "companies that sell thermal management devices categorize heat exchangers separately from other devices." Ex. 2024 ¶ 61. Also, the argument is unavailing because Patent Owner has not shown that heat sinks or finned surfaces are mutually exclusive from or without overlap with heat exchangers. Note, for example, Figure 4.2 of Steinberg, reproduced above and again here:

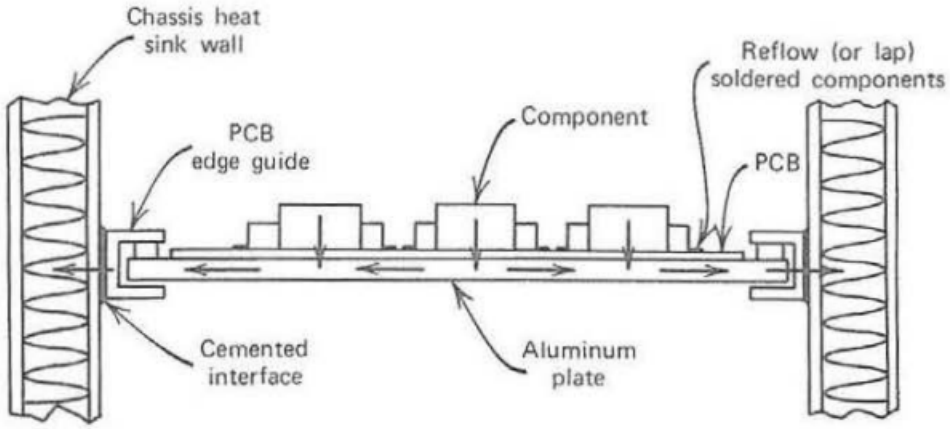

Figure 4.2 Conduction heat flow path from component to heat sink.

Figure 4.2 shows heat flow path to a heat sink. Ex. 1020, 79.

Steinberg describes: "The heat can then flow along the PCBs [printed circuit boards] to the air cooled side walls of the chassis, which contain multiple *fin heat exchangers*, as shown in Figure 4.2." Ex. 1020, 79 (emphasis added). The fins as heat sinks are also "fin heat exchangers." *Id.* This example undermines Patent Owner's argument that a "heat sink" is always mutually exclusive from a "heat exchanger."

Patent Owner argues that Petitioner's position on what constitutes a "heat exchanger" is inconsistently applied and ever-shifting. Sur-reply 11–12. Patent Owner asserts that while Petitioner regards Thielemans and Nagashima both as disclosing a heat exchanger, Petitioner regards the similar structure disclosed in the '064 Provisional as a heat sink rather than a heat exchanger. *Id*. This argument depends on Patent Owner's characterization of Petitioner's expert, Mr. Smith-Gillespie, as agreeing on cross-examination that the '064 Provisional does not disclose a heat exchanger. PO Resp. 13 (citing Ex. 2021, 73:13–74:8).

We have already discussed that testimony above and find that Patent Owner presents a distorted view of the testimony. Also, we discussed above how the record does not establish absolute mutual exclusivity between heat sinks and heat exchangers. Thus, we find no real inconsistency.

Patent Owner further asserts:

> In the Background section, the '740 Patent describes prior electronic image assembly cooling systems transferred heat through walls of the enclosure using conduction and convection. '740 Patent, 1:50–67. Such systems may have moved "heated air . . . into convectively thermal communication with fins." *Id.* 2:1–2.

PO Resp. 13. Essentially the same description of preexisting cooling systems, however, appears in the Background of the Art portion of the '064 Provisional. Ex. 2011 ¶ 3. Thus, the '064 Provisional distinguishes from preexisting art in similar manner as does the '740 patent, and the quoted language does not serve to distinguish the '740 patent from the '064 Provisional. Neither conclusively disavows claim scope for heat exchangers without enclosed channels or tubes.

Finally, while it is true that the '740 patent discloses only heat exchangers with enclosed channels or tubes, it is improper to read limitations from a preferred embodiment described in the specification, even if it is the only embodiment, into the claims absent a clear indication in the intrinsic record that the patentee intended the claims to be so limited. *EPOS Techs. Ltd. v. Pegasus Techs. Ltd.*, 766 F.3d 1338, 1341 (Fed. Cir. 2014); *Liebel–Flarsheim v. Medrad, Inc.,* 358 F.3d 898, 913 (Fed. Cir. 2004); *Teleflex, Inc. v. Ficosa N. Am. Corp.*, 299 F.3d 1313, 1327 (Fed. Cir. 2002). Patent Owner has shown no such clear indication.

Patent Owner asserts that the following sentence in the specification of the '740 patent refers only to heat exchangers which include enclosed channels or tubes, because the remainder of the specification consistently describes all of these heat exchangers as having channels or tubes: "However, many types of heat exchangers are known and can be used with any of the embodiments herein." Ex. 1001, 4:20–22 (cited at Sur-reply 8–9). We disagree. The immediately following sentence in the specification reads: "The heat exchanger 101 *may be* a cross-flow, parallel flow, or counter-flow heat exchanger." *Id*. at 4:22–23 (emphasis added). The key words here are "may be," which are different from "must be."

Further, although all of the described cross-flow, parallel flow, and counter-flow heat exchangers have enclosed channels or tubes, the specification does not clearly convey that only structures with enclosed channels or tubes can be heat exchangers. Based on the description given in the specification, it is more reasonable to regard heat exchangers having enclosed channels or tubes to be one of "many types" of heat exchangers not all of which have been specifically described in the specification.

c) Conclusion

For reasons discussed above, we determine that a heat exchanger may, but does not have to, include enclosed channels or tubes. No additional construction of "heat exchanger" is necessary to resolve the controversy between the parties.

C. Patent Owner's Assertion that the Testimony of Petitioner's Expert Should be Given Little Weight

Patent Owner asserts that "Petitioner's expert, Smith-Gillespie, should be given little weight as his analysis contains plain errors in thermal physics and was later contradicted during deposition and at trial in the 1331 Investigation." PO Resp. 7. The assertion is without merit.

Patent Owner asserts that Mr. Smith-Gillespie made a basic scientific error when providing testimony regarding claim 7 PO Resp. 7. We address this assertion in our discussion of claim 7 in Section II.D.8. below and do not agree with Patent Owner that Mr. Smith-Gillespie made a basic scientific error.

Patent Owner asserts that Mr. Smith-Gillespie "directly contradicted himself when pressed during deposition" with regard to the level of ordinary skill in the art. PO Resp. 8–9. We addressed this assertion in our discussion above in Section II.A. and do not agree with Patent Owner that Mr. Smith-Gillespie contradicted himself.

Accordingly, we do not discount Mr. Smith-Gillespie's testimony based on Patent Owner's assertions.

D. Alleged Obviousness of Claims 1–3 5–9, 11–13, 15–18, and 20 over Karppanen

1. The Law on Obviousness

A claim is unpatentable under 35 U.S.C. § 103 if the differences between the claimed subject matter and the prior art are such that the subject matter, as a whole, would have been obvious to a person having ordinary skill in the art to which said subject matter pertains. *See KSR Int'l Co. v. Teleflex Inc.*, 550 U.S. 398, 406 (2007). The question of obviousness is resolved on the basis of underlying factual determinations, including (1) the scope and content of the prior art; (2) any differences between the claimed subject matter and the prior art; (3) the level of skill in the art; and (4) where in evidence, so-called secondary considerations, including commercial success, long-felt but unsolved needs, failure of others, and unexpected results. *Graham v. John Deere Co. of Kansas City*, 383 U.S. 1, 17–18 (1966).

When evaluating a combination of teachings, we must also "determine whether there was an apparent reason to combine the known elements in the fashion claimed by the patent at issue." *KSR*, 550 U.S. at 418 (citing *In re Kahn*, 441 F.3d 977, 988 (Fed. Cir. 2006)). "[T]here must be some articulated reasoning with some rational underpinning to support the legal conclusion of obviousness." *Kahn*, 441 F.3d at 988.

2. Overview of Karppanen

Karppanen is an international patent application titled "Electronic Information Board." Ex. 1004, code (54). It relates to an electronic information board comprising a frame, a flat display element for presenting information, and electronic equipment for controlling the display element.

Id. at 1:3–5. The flat display element can be a TFT LCD (thin film transistor liquid crystal display) or plasma display. *Id.* at 3:21–23. The information board has a display casing for the display element and a device casing for the electronic equipment needed for controlling the display element. *Id.* at 3:28–30. "Cooling elements have also been arranged in the display casing for transferring heat from the display casing to the outside of the display casing." *Id.* at 3:30–32. Karppanen describes:

> TFT LCD displays are used to some extent in the implementation of public electronic bulletin boards. The problem is that when used in environments having high temperatures, the temperature of the display devices easily rise too high. On the other hand, in cold environments there is the danger that the temperatures of the display devices fall too low. In both situations it is important that the temperatures at different points inside the display device can be kept as constant as possible. Then the display device operates in the widest possible range of operating temperatures, and local temperatures do not cause exceeding of the specifications given to the display element.

Id. at 1:24–32. Figure 2 of Karppanen is reproduced below:

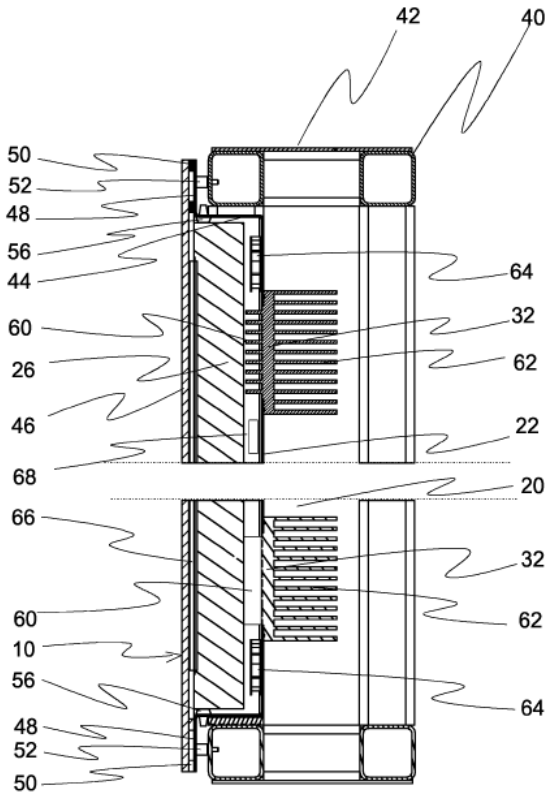

Fig. 2

Figure 2 is a cross-sectional view of one embodiment of Karppanen's electronic information board. Ex. 1004, 6:7–8.

The information board has frame 40 to an edge of which is fastened lining plate 42. Ex. 1004, 7:27–30. Display casing 10 comprises backwall 22, transparent front plate 46, and edge part 44. *Id.* at 7:31–32. Edge part 44 has flange-like fastening collar 48 running in the direction of the front plate and is fastened to the frame by fastening means 52. *Id.* at 7:32–34. Transparent front plate 46 is fastened to the fastening collar of the edge parts by means of sealing elements 50 so that the edge parts of the front plate and the back wall form a closed display casing. *Id.* at 7:35–38.

Inside the display casing is display element 26. Ex. 1004, 8:4. In the backwall of the display casing, there are cooling elements 32 which have

first heat transfer part 60 extending to the inside of the display casing and second heat transfer part 62 extending to cooling space 20 outside the display casing. *Id.* at 8:13–16. The cooling elements transfer excess thermal energy from the display casing to the cooling space, from which space it is further conducted by air flow produced by cooling fans 36 out of the entire device. *Id.* at 8:19–22. First cooling element 32 in the upper half of Figure 2 is in the form of cooling fins. *Id.* at 9:1–3. Second cooling element 32 in the lower half of Figure 2 has first heat transfer part 60 not of fins but a conduction element set against the surface of display element 26. *Id.* at 9:13–16. Karppanen states: "A conduction element is a fixed body conducting heat well, which is placed so that it touches the heat source, whereby the heat is transferred from the heat source to the cooling element by conduction." *Id.* at 8:30–32. Karppanen describes that either fins or conduction element, or both, can be used. *Id.* at 9:17–19.

Inside the display casing on back wall 22 are fans 64 which circulate air in the space between display element 26 and the walls of display casing 10. *Id.* at 9:3–5. Ducting 66 are arranged between display casing 10 and display element 26 so that air flow circulating the display element and equalizing the temperatures can be effected by fans 64 which force the air of the inner casing to flow past front plate 46 of the device. *Id.* at 9:5–8.

Karppanen describes that from cooling space 20 thermal energy is conducted by air flow produced by cooling fans out of the entire device. Ex. 1004, 8:19–22. In one embodiment, "there are ventilator slots or holes on the opposite sides of the cooling space for enabling air flow from the outside of the information board to the cooling space and from the cooling space back to the outside of the information board." *Id.* at 4:19–22.

Karppanen describes that "[i]n the cooling space there is preferably at least one cooling fan for circulating air through the cooling space." *Id.* at 4:22–23.

3. Independent Claim 1

a) Recitation [1 pre]

In its preamble, claim 1 recites: "An electronic display, comprising." Ex. 1001, 9:54. Petitioner asserts that Karppanen discloses such an electronic display. Pet. 18 (citing Ex. 1002 ¶¶ 109–111). Petitioner cites (*id.*) to Karppanen's Abstract, which describes an "electronic information board" (the claimed electronic display) having display element 26 and electronic equipment for controlling the display element. Ex. 1004, code (57). Petitioner also asserts that Karppanen describes that the information board includes closed display casing 10 and closed device casing 12, and that display element 26 is placed inside display casing 10. Pet. 18 (citing Ex. 1004, 6:16–24, Figs. 1, 2).

Petitioner's assertions are supported by the cited evidence. Patent Owner does not present counter-argument in this regard. We are persuaded that Karppanen's information board is "[a]n electronic display."[8]

b) Limitation [1a]

Claim 1 recites: "an electronic image assembly having a front portion and a rear portion." Ex. 1001, 9:55–56. Petitioner identifies Karppanen's display element 26 as the claimed electronic image assembly, and notes that Karppanen describes that its display "is preferably a TFT **LCD display**." Pet. 20 (citing Ex. 1002 ¶¶ 112–116; Ex. 1004, 8:5–9, Fig. 2). On page 20

[8] It is not necessary to determine whether the preamble recitation is limiting. *See Realtime Data*, 912 F.3d at 1375.

of the Petition, Petitioner produces a color-annotated version of Figure 4 of Karppanen, reproduced below:

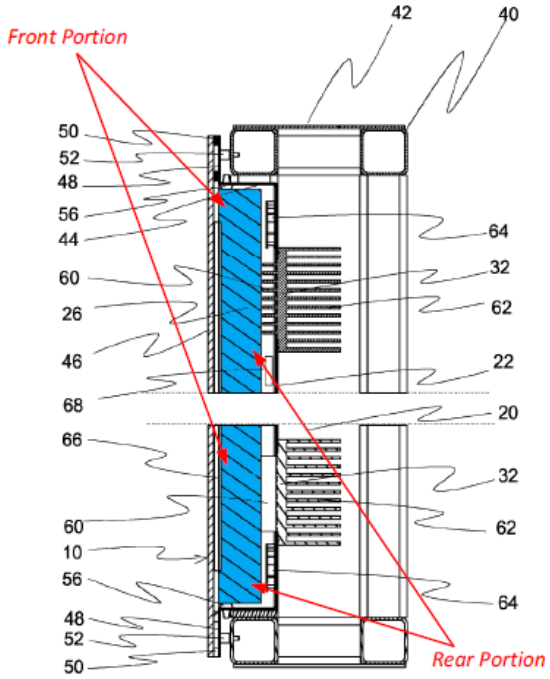

Figure 4 is a cross-sectional view of one embodiment of Karppanen's electronic information board. Ex. 1004, 6:13–14.

Petitioner asserts: "As shown, the display element 26 (highlighted blue) has a front portion and a rear portion." Pet. 20 (citing Ex. 1002 ¶ 114). The labels with arrows, in red, are added by Petitioner. Petitioner further asserts "the display element 26 individually, and also in combination with the background light, is 'an electronic image assembly having a front portion and a rear portion." *Id.* at 21 (citing Ex. 1002 ¶ 116). Mr. Smith-Gillespie testifies that Karppanen discloses that there is a background light or backlight in LCD display 26. Ex. 1002 ¶ 113 (citing Ex. 1004, 6:21–26).

Patent Owner does not present counter-argument in this regard. We are persuaded that Karppanen's display element 26 is an electronic image

assembly having a front portion and a rear portion as is recited in claim 1. Thus, Karppanen discloses limitation [1a].

c) Limitation [1b]

Claim 1 recites "an open loop ambient air flow path behind the rear portion of the electronic image assembly." Ex. 1001, 9:57–58. On page 22 of the Petition, Petitioner produces a color-annotated version of Figure 2 of Karppanen, reproduced below:

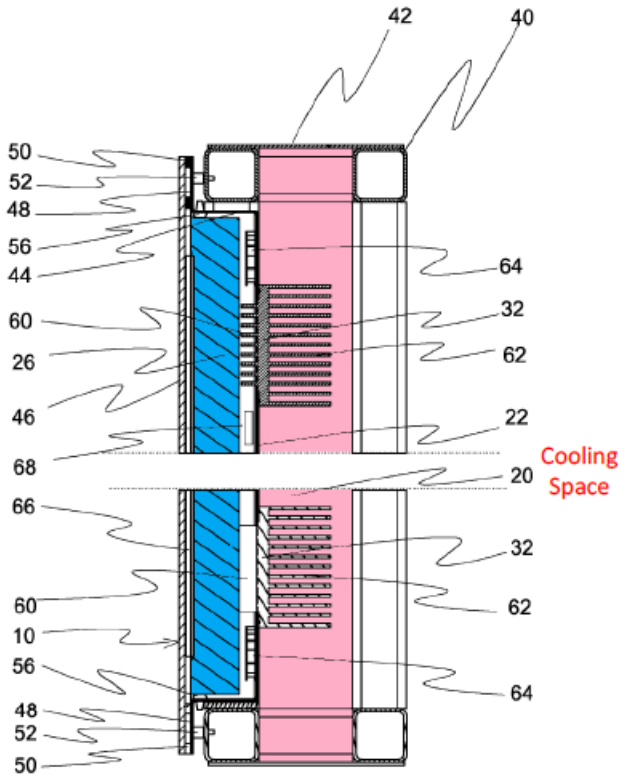

Figure 2 is a cross-section of an embodiment of Karppanen's electronic information board. Ex. 1004, 6:7–8 (color annotations by Petitioner).

Petitioner explains that Karppanen discloses limitation 1[b] "because Karppanen's system provides an open 'cooling space 20' for the flow of ambient air." Pet. 21 (citing Ex. 1002 ¶¶ 117–119). Petitioner identifies Karppanen's disclosure that cooling space 20 is between display casing 10 and device casing 12. *Id.* (citing Ex. 1004, 7:7–11).

Petitioner further explains:

> The cooling space 20 (highlighted pink) is behind the display element 26 (highlighted blue). (Ex. 1002, ¶118.) Karppanen states that "[i]n the back wall 22 of the display casing and the back cover 28 of the device casing there are cooling elements 32, by which heat is transferred from the inside of the device casing and the display casing to the cooling air in the cooling space 20." (Ex. 1004, 7:11–14.) Karppanen further discloses "ventilator slots 34, which enable the movement of air from the outside of the device to the cooling space [20] and from the cooling space back to the outside of the device." (*Id.*, 7:16–22, Fig. 1)

Id. at 22. On that basis, Petitioner asserts "the cooling space [20] is an open flow path for ambient air, where the path is behind the display element 26." *Id.* at 23 (citing Ex. 1002 ¶ 119),

With regard to these assertions, Patent Owner does not present counter-arguments. Petitioner's assertions are supported by the cited evidence. We are persuaded that Karppanen discloses limitation [1b].

d) Limitation [1c]

Claim 1 further recites: "a closed loop gas circulation path about the electronic image assembly." Ex. 1001, 9:59–60. Petitioner asserts Karppanen discloses this closed loop gas circulation path "because Karppanen's system includes a closed loop cooling path formed in part by ducting 66 within the display casing 10." Pet. 23 (citing Ex. 1002 ¶¶ 120–122). On page 24 of the Petition, Petitioner produces a color-annotated version of Figure 2 of Karppanen, reproduced below:

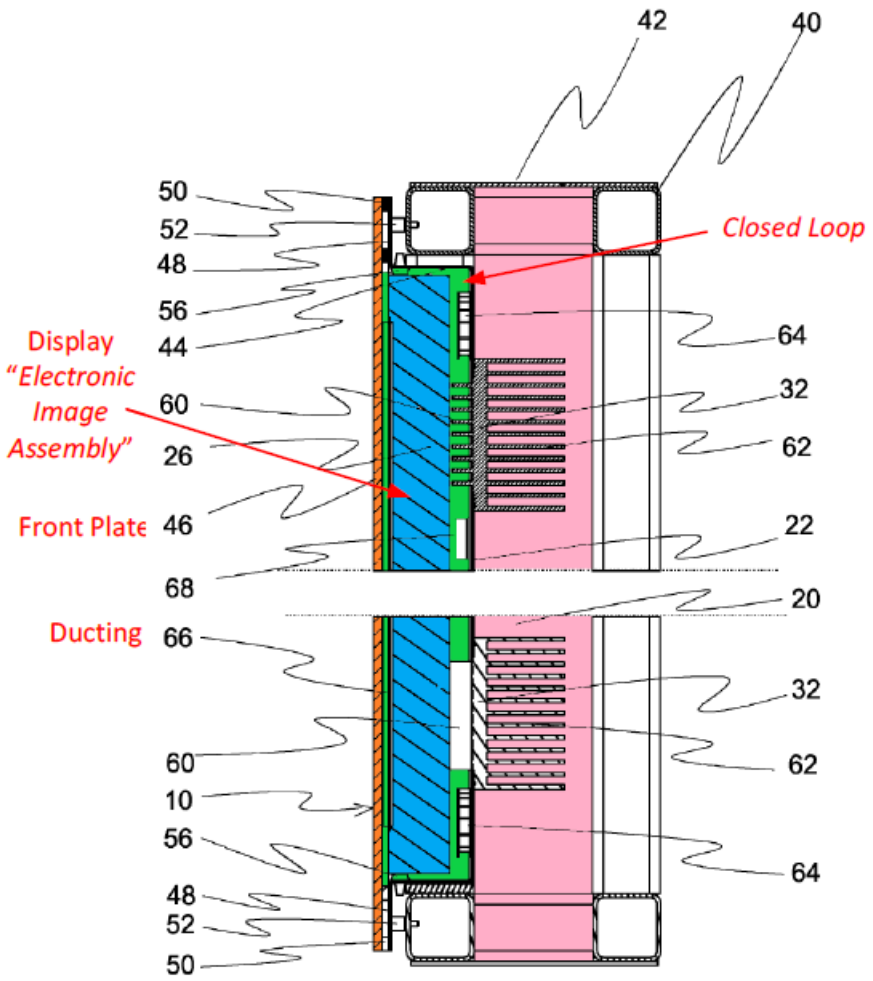

Figure 2 is a cross-section of an embodiment of Karppanen's electronic information board. Ex. 1004, 6:7–8 (color annotations by Petitioner).

Petitioner identifies closed display casing 10 having back wall 22 and transparent front plate 46. *Id.* at 23–24. Petitioner also identifies ducting 66 between the display casing and the display element, and fans 64 which facilitate an air flow circulating display element 26 and past front plate 46 of the device. *Id.* at 24. Petitioner explains:

> Thus, within the closed display casing 10, there is a closed loop airflow path (highlighted green) that "circulat[es]" around the display screen 26 (highlighted blue) just as in the '740 patent's closed loop. The closed loop pathway is formed

> around the display element 26 and is thus "*a closed loop gas circulation path about the electronic image assembly*." (Ex. 1002, ¶122.)

Id. at 25.

With regard to these assertions, Patent Owner only argues that in Karppanen the closed loop is not essentially isolated from ambient air as Petitioner asserts "closed loop" requires. PO Resp. 19–21. However, as we discussed above in Section II.B.1., the term "closed loop" does not require essential isolation from ambient air. Given that understanding of "closed loop," we are persuaded that Karppanen discloses limitation [1c].

e) Limitation [1d]

Claim 1 recites: "a common heat exchanger located in the pathway of both the closed loop gas circulation path and the open loop ambient air flow path." Ex. 1001, 9:61–63.

Petitioner identifies Karppanen's cooling element 32 as the claimed common heat exchanger. Pet. 25. The closed loop gas circulation path and the open loop ambient air flow path are identified by Petitioner in its discussion of limitations [1b] and [1c]. Petitioner asserts that cooling element 32 is located in both the closed loop gas circulation path and the open loop ambient air flow path and transfers heat from the closed loop to the open loop. *Id.* (citing Ex. 1002 ¶¶ 123–130). Petitioner explains that cooling element 32 has first heat transfer part 60 extending to the inside of the display casing and second heat transfer part 62 extending to cooling space 20. *Id.* (citing Ex. 1004, 8:13–16, 8:29–30, 9:1–5, Fig. 2).

On page 27 of the Petition, Petitioner produces a color-annotated partial version of Figure 2 of Karppanen, reproduced below:

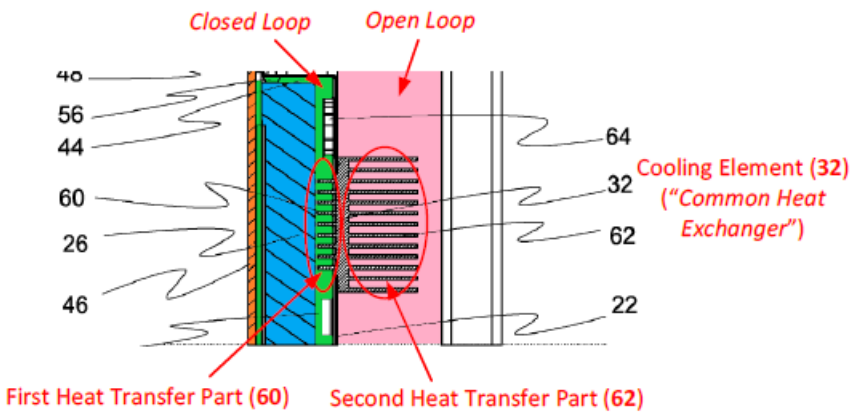

Figure 2 is a cross-section of an embodiment of Karppanen's electronic information board. Ex. 1004, 6:7–8 (color annotations by Petitioner).

Petitioner explains that, as shown, there is a closed loop gas circulation path (highlighted green) through which air is circulated by fans 64. Pet. 26. Mr. Smith-Gillespie provides supporting testimony in that regard. Ex. 1002 ¶ 126. Petitioner explains that first heat transfer part 60 (fins) of cooling element 32 is within that closed loop pathway. Pet. 26 (citing Ex. 1002 ¶ 128). Petitioner explains that second heat transfer part 62 comprises a number of plate-like cooling fins and that when cooling air flows between those fins, heat is transferred from those fins to the air within cooling space 20. *Id.* (citing Ex. 1004, 8:16–22). Petitioner explains that cooling space 20, together with ventilator slots 34 in that cooling space, form the open loop ambient air flow path, and second heat transfer part 62 is within that open loop path. *Id.* at 27.

Petitioner summarizes as follows: "Accordingly, the cooling element 32 ('*common heat exchanger*') has two parts – one in the closed loop path and the other in the open loop path. Therefore, Karppanen teaches this claim element." Pet. 27 (citing Ex. 1002 ¶ 130). Notwithstanding Patent Owner's arguments to the contrary, discussed below, Petitioner's

assertions are supported by the cited evidence and persuade us that Karppanen discloses element [1d].

Patent Owner contends that a "heat exchanger" must be a device that includes enclosed channels or tubes. PO Resp. 11; Sur-reply 13–14. In Section II.B.2 above, we analyzed and rejected Patent Owner's arguments regarding the construction of the term "heat exchanger." Our reasoning need not be repeated here. Patent Owner also suggests that the claim language recites that the heat exchanger must "form" the loop pathways and allow the pathways to pass through the heat exchanger. Sur-reply 7. That is incorrect. There is no claim language requiring the heat exchanger to "form" the loop pathways. Limitation [1d] only requires the heat exchanger to be "located in the pathway of both the closed loop gas circulation path and the open loop ambient air flow path," and limitations [1e] and [1f] require only that circulating gas and ambient air pass through the heat exchanger, as discussed below.

Patent Owner argues that Karppanen's cooling element 32 is a finned wall or a heat sink. PO Resp. 22–24. The argument is unavailing. Also as discussed above in Section II.B.2, we do not agree with Patent Owner's suggestion that a heat sink and a heat exchanger are mutually exclusive, i.e., that a heat sink or finned wall cannot be a "heat exchanger" as that term would have been understood by a person of ordinary skill in the art. The issue is whether element 32 is a heat exchanger, not whether element 32 is a finned wall or a heat sink. Mr. Smith-Gillespie testifies that Karppanen's cooling element 32 is located in both the closed loop gas circulation path and the open loop ambient air flow path, and "transfers heat from the closed loop to the open loop." Ex. 1002 ¶ 123. Karppanen also describes that "by

[cooling elements 32] heat is transferred from the inside of the device casing and the display casing to the cooling air in the cooling space 20." Ex. 1004, 7:12–14. As such, we are persuaded that Karppanen's cooling element 32 teaches the recited "heat exchanger." Ex. 1004, 7:12–14, 8:13–16, 8:29–30, 9:1–5, Fig. 2; Ex. 1002 ¶¶ 123–130). Patent Owner further notes that in one embodiment Karppanen's element 32 is a Peltier device, which is an active device that pumps heat and thus is not a heat exchanger. PO Resp. 25–26. Petitioner, however, has not relied on that embodiment of element 32 to meet limitation [1d].

For the foregoing reasons, Petitioner persuades us that Karppanen discloses limitation [1d].

f) Limitation [1e]

Claim 1 recites: "a gas circulation device positioned to force circulating gas through the common heat exchanger." Ex. 1001, 9:64–65. On page 28 of the Petition, Petitioner produces a color-annotated partial version of Figure 2 of Karppanen, reproduced below:

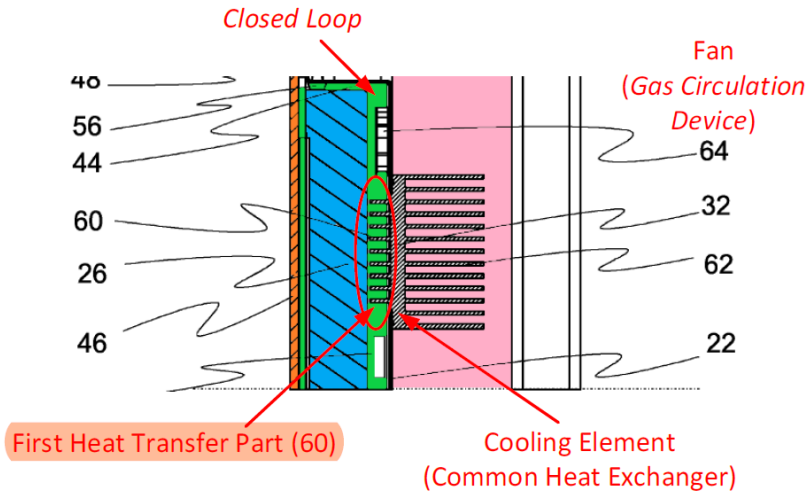

Figure 2 is a cross-section of an embodiment of Karppanen's electronic information board. Ex. 1004, 6:7–8 (color annotations by Petitioner).

Petitioner asserts that Karppanen discloses limitation 1[e] because Karppanen's system includes fans 64 that force the air circulating in the closed pathway. Pet. 27–28. Petitioner asserts that first heat transfer part 60 of cooling element 32, which is the common heat exchanger, is located within the closed pathway (highlighted in green) and fans 64 force air between fins of heat transfer part 60. *Id.* at 28 (citing Ex. 1002 ¶ 131). Petitioner asserts: "Forcing air between the fins is forcing air through the fins under the plain meaning of 'through the common heat exchanger' because the air flows over and between the heat exchanger elements." *Id.* (citing Ex. 1002 ¶ 135). Petitioner asserts that as shown in the above-reproduced figure, "the fans [64] force closed loop air through part 60 (cooling fins) of the cooling element 32 ('common heat exchanger')." *Id.* (citing Ex. 1002 ¶ 135).

With regard to these assertions, Patent Owner essentially reiterates its argument presented for limitation [1d], that a heat exchanger must have enclosed channels or tubes. PO Resp. 29–30. On that basis, Patent Owner asserts that to pass "through" a heat exchanger, the heat exchanger must "contain" the fluid flow path, i.e., that it is not enough for the heat exchanger merely to be located in the path of fluid flow. *Id.* at 29. The argument that a heat exchanger must include enclosed channels or tubes which contain fluid flow has already been discussed and rejected above in Section II.B.2. and need not be repeated here. Because enclosed channels or tubes are not required for a heat exchanger, Patent Owner's argument that Karppanen does not disclose limitation [1e] is unavailing. We find that because air flow is passing through the fins of the heat exchanger, *see* Ex. 1002 ¶¶ 131, 135, gas is passing through the heat exchanger. Petitioner's assertions are

supported by the cited evidence. We are persuaded that Karppanen discloses limitation [1e].[9]

g) Limitation [1f]

Claim 1 recites: "an air circulation device positioned to force ambient air through the common heat exchanger." Ex. 1001, 9:66–67.

Petitioner explains that Karppanen discloses limitation 1[f] because its system "includes fans 36 to force ambient air through cooling space 20." Pet. 30–31. Petitioner explains that cooling element 32 is the common heat exchanger, that second heat transfer part 62 of cooling element 32 is located within cooling space 20, and that fans 36 force ambient air through second heat transfer part 62. *Id.* at 31 (citing Ex. 1002 ¶¶ 155–159).

On page 31 of the Petition, Petitioner produces a color-annotated version of Figure 1 of Karppanen, reproduced below:

[9] Petitioner presents an alternate theory that if the "through the common heat exchanger" recitation of limitation 1[e] is "interpreted to require the passage of air through the inside of a component of the heat exchanger," then such a configuration would have been obvious to one with ordinary skill in the art. Pet. 29–30. We need not reach that alternative argument.

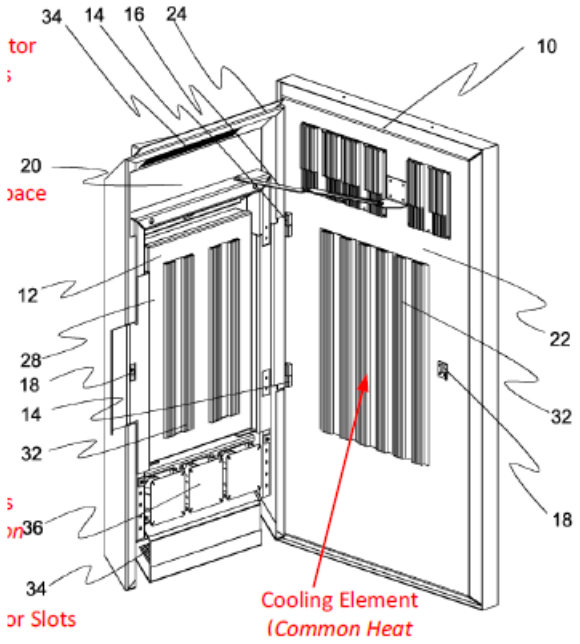

Figure 1 is a perspective view of an embodiment of Karppanen's electronic information board. Ex. 1004, 6:4–5 (color annotations by Petitioner).

Petitioner cites to the following description in Karppanen: "In the cover 24 there are cooling fans 36, by which the circulation of air through the cooling space is regulated." Ex. 1004, 7:21–22 (cited at Pet. 31). Petitioner explains that cooling space 20 is the open loop ambient air flow path, and that cooling fan 36 is an air circulation device. Pet. 31. Petitioner further explains that cooling element 32 (the common heat exchanger) has second heat transfer part 62 that is located within the cooling space 20, and that second heat transfer part 62 may be in the form of cooling fins where the cooling air flows between the fins of cooling element 32. *Id.* at 32 (citing Ex. 1004, 8:13–19). On that basis, Petitioner asserts that fans 36 force ambient air between the fins of the second heat transfer part 62, and therefore "through the common heat exchanger." *Id.* (citing Ex. 1002 ¶ 158).

With regard to these assertions, Patent Owner essentially reiterates its argument presented for limitation [1d], that a heat exchanger must have enclosed channels or tubes. PO Resp. 29–30. On that basis, Patent Owner asserts that to pass "through" a heat exchanger, the heat exchanger must "contain" the fluid flow path, i.e., that it is not enough that the heat exchanger merely to be in the path of fluid flow. *Id*. at 29. The argument that a heat exchanger must include enclosed channels or tubes which contain fluid flow has already been discussed and rejected above in Section II.B.2. and need not be repeated here. Because enclosed channels or tubes are not required for a heat exchanger, Patent Owner's argument that Karppanen does not disclose limitation [1f] is unavailing. We find that because ambient air flow is passing between the fins of the heat exchanger, *see* Ex. 1002 ¶¶ 155–157; Ex. 1004, 7:21–22, 8:13–19, ambient air is passing through the heat exchanger. Petitioner's assertions are supported by the cited evidence. We are persuaded that Karppanen discloses limitation [1f].[10]

h) Secondary Considerations of Nonobviousness

We discuss secondary considerations of nonobviousness in a separate section below, Section II.F., because the assertions of the parties and the evidence submitted are pertinent to more than just claim 1. Our conclusion of obviousness is reached after having considered all objective evidence of nonobviousness submitted by Patent Owner.

---

[10] As is the case with limitation 1[e], Petitioner presents an alternate theory, based on obviousness, in case the "through the common heat exchanger" recitation of limitation 1[f] is "interpreted to require the passage of air through the inside of a component of the heat exchanger." Pet. 32. We need not reach that alternative argument.

i) Conclusion

We have considered the totality of the evidence before us, including both the evidence of obviousness and the evidence of nonobviousness (discussed in Section II.F. below) and weighed them accordingly. We find that the evidence of obviouness substantially outweighs the evidence of nonobviousness.

Accordingly, Petitioner has proven by a preponderance of the evidence that claim 1 would have been obvious over Karppanen.

4. Dependent Claim 2

Claim 2 recites:[11]

> [2a] The electronic display of claim 1, further comprising: a substantially planar surface located behind and spaced apart from the rear portion of the electronic image assembly; and
>
> [2b] a space defined between the rear portion of the electronic image assembly and the substantially planar surface;
>
> [2c] wherein the space is in gaseous communication with the open loop ambient air flow path.

Ex. 1001, 10:1–8.

For limitation [2a], Petitioner asserts:

> Karppanen teaches this claim element because Karppanen's system includes a device casing 12 located behind the display 26 ("the electronic image assembly"), and the device casing 12 has a planar rear cover 28 ("a substantially planar surface"). (Ex. 1002, ¶¶160-163.)
>
> Karppanen states: "[t]he information board has a closed display casing 10, to the back wall 22 of which a cover 24 opening on hinges 14 has been connected." (Ex. 1004, 6:17-19,

[11] The bracketed captions correspond to those used by Petitioner to reference the claim elements. *See* Pet. 112–13. We use them here for ease of reference, understanding, and consistency.

> Fig. 1.) "A closed device casing 12 has been fastened to the bottom of the cover [24]." (*Id.*, 6:20-21, Fig. 1.) The "closed" device casing [[12]] has a "back cover 28." (*Id.*, 7:11-14, Fig. 1.)

Pet. 32–33. On page 33 of the Petition, Petitioner provides an annotated version of Karppanen's Figure 1, reproduced below:

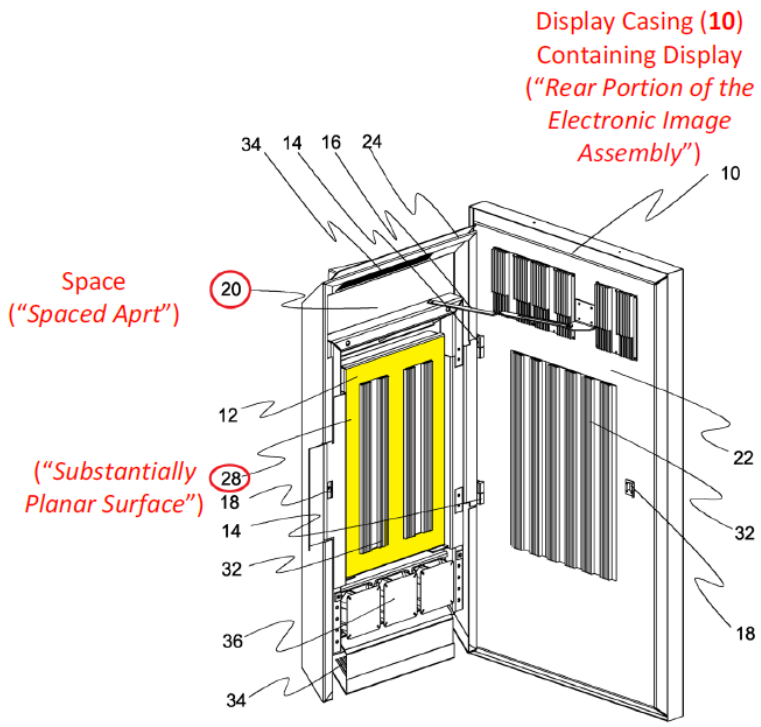

Figure 1 is a perspective view of an embodiment of Karppanen's electronic information board (Ex. 1004, 6:4–5) (color annotations by Petitioner to identify substantially planar surface 28, display casing 10 containing electronic image assembly and rear portion thereof, and space 20).

On page 34 of the Petition, Petitioner provides an annotated version of Karppanen's Figure 2, reproduced below:

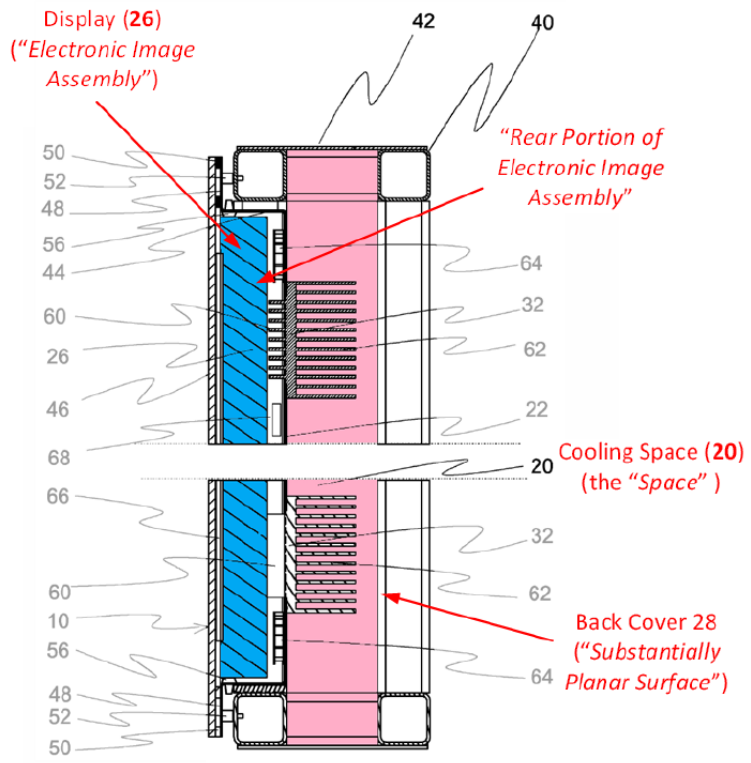

Figure 2 is a cross-section of Karppanen's electronic information board. Ex. 1004, 6:7–8 (color annotations by Petitioner to identify substantially planar surface 28, display 26 which is the electronic image assembly, rear portion of electronic image assembly, and cooling space 20).

Petitioner explains:

> The back cover 28 (highlighted yellow [annotated Figure 1]) is "*a substantially planar surface*" behind the display casing 10. (*Id.*, 7:7-9.)
>
> The display 26 ("*the electronic image assembly*") is disposed within the display casing 10. (*Supra*, § VIII.A.2.) In the closed position, the back cover 28 ("*a substantially planar surface*") of the device casing 12 is "located behind and spaced apart" by the cooling space "*from the rear portion of*" the display 26 ("*the electronic image assembly*").

Pet. 34.

For limitation [2b], Petitioner explains that Karppanen teaches this element because in the closed position, back cover 28 (i.e., the "substantially

planar surface") is spaced from display 26 (i.e., the "electronic image assembly") by cooling space 20, which defines at least a portion of the space between the rear portion of display 26 and back cover 28. Pet. 35–36. For limitation [2c], Petitioner explains that Karppanen discloses this element because the defined space includes at least a portion of cooling space 20 that constitutes the open loop ambient air flow path. *Id*. at 36–37.

We are persuaded by Petitioner's assertions and explanations, notwithstanding Patent Owner's arguments discussed below.

Patent Owner asserts:

> The language of claim 2 describes a (singular) space between the rear surface of the electronic image assembly and a planar surface through which the open loop passes. "A space defined between" does not refer to multiple separate spaces that are formed between the rear surface of the electronic image assembly and a substantially planar surface somewhere remote in the enclosure. *See also Agilent Tech., Inc. v. Affymetrix, Inc.*, 567 F.3d 1366, 1367 (Fed. Cir. 2009) (finding the plain language of a claim reciting a space "'define[d] by 'a first substrate and a second substrate having inner surfaces'" required that the "chamber be bounded by two discrete substrates" and rejecting the district court's construction that allowed a "system of enclosures" to meet the claim language).

PO Resp. 32. This argument is misplaced and unavailing.

Reciting "a" space does not preclude the presence of additional spaces. Claim 2 nowhere requires "only" a single space between the rear of the image display assembly and the substantially planar surface. Also, *Agilent Technologies*, as cited by Patent Owner, is inapposite, because the "space" of claim 2 is not defined "by" two boundaries but defined "between" the two recited boundaries. Claim 2 is broader than Patent Owner argues. The space identified by Petitioner is "between" the rear of

the image display assembly and the substantially planar surface. Claim 2 does not specify what the immediately abutting physical boundaries of the space are, much less require them to be the rear portion of the electronic image assembly and the substantially planar surface.

Patent Owner further asserts:

> The doctrine of claim differentiation further supports the conclusion that the channel/space must be directly formed by the rear of the electronic image assembly and the substantially planar surface. Claim 1 of the '740 Patent recites an open loop pathway behind the electronic image assembly, but claim 1 does not specify which structures form that open loop pathway. *See* '740 Patent claim 1 ("an open loop ambient air flow path ***behind*** the rear portion of the electronic image assembly;"). Claim 2, which depends on claim 1, is presumed to have a narrower definition. *American Piledriving Equip., Inc. v. Geoquip, Inc.*, 637 F.3d 1324, 1335 (Fed. Cir. 2011) (affirming the application of claim differentiation to conclude that a dependent claim described narrower subject matter than the independent claim describing a similar structure). Claim 2 recites that the open loop, which is behind the electronic image assembly, must be found in ***the*** **space** defined between the rear surface of the electronic image assembly and a substantially planar surface. To meet claim 2's narrower imitation, it is not sufficient that there is ***some*** space ***somewhere*** between the rear of the electronic display surface and a substantially planar surface. Otherwise, claim 2 would merely recite the same structure as claim 1's broader "behind" language.

PO. Resp. 32–33. This argument is unavailing.

Claim 2 already is narrower than claim 1 by its recitation of a substantially planar surface behind the rear portion of the electronic image assembly. No such substantially planar surface is required by claim 1. We do not agree with Patent Owner that claim 2 has the same structure as claim 1's broader "behind" language unless the defined space has its immediate physical boundaries formed by the rear portion of the electronic

image assembly and the substantially planar surface. Further, claim 2's language is "a space" defined between the rear portion of the electronic image assembly and the substantially planar surface, not "the space" defined between the rear surface of the electronic image assembly and a substantially planar surface as Patent Owner states. Thus, we do not agree that these two spaces must be coextensive.

Patent Owner additionally argues:

> The '740 Patent specification confirms that claim 2 refers to the "additional optional" open loop pathway described in the '740 Patent as passing along the backlight of the electronic image assembly in order to directly cool the backlight. *See* '740 Patent at 6:23-30 ("A second surface 224 may be placed behind the rear surface 223 of the backlight assembly 22. The space between the rear surface 223 of the backlight and the second surface 24 may define an additional optional open loop channel 225 through which ambient gas may travel in order to cool the backlight assembly 22 (or image assembly 220 if no backlight is used."). The second surface 224 is the "substantially planar surface" of claim 2, the rear surface 223 is the "rear portion of the electronic image assemble" of claim 2, and space between them for the additional open loop pathway is "a space defined between" the[m] for the open loop air flow pathway of claim 2. Ex. 2024, ¶109.

PO Resp. 33–34. This argument also is unavailing. It seeks to read into claim 2 the additional optional open loop pathway in the specification that is not required by the broader language of the claim. Although the language of claim 2 reads on the optional feature described in the specification, claim 2 does not require it.

According to Patent Owner, "Petitioner points to the Figure 1 [of Karppanen] and indicates that it believes that the entire display casing 10 is the rear portion of the electronic image assembly." PO Resp. 35 (citing

Pet. 39)[12]. Patent Owner states that that characterization "is inconsistent with Petitioner's arguments throughout the Petition that the display is within the display casing 10 and the closed loop air surrounds the display within that casing—not open loop ambient air." *Id.* at 36 (citing Pet. 29–30)[13]. In particular, Patent Owner on page 36 of the Patent Owner Response reproduces the following annotated Figure on page 33 of the Petition to illustrate its assertion that Petitioner inconsistently identifies the entire display casing 10 as the rear portion of the electronic image assembly:

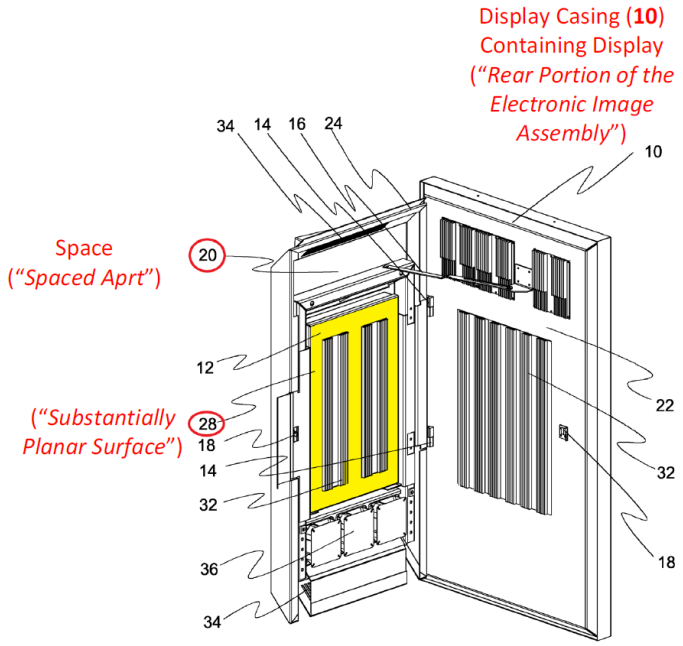

Karppanen's Figure 1 is a perspective view of Karppanen's electronic information board. Ex. 1004, 6:4–5 (color annotations by Petitioner to identify substantially planar surface 28, display casing 10 containing electronic image assembly and rear portion thereof, and space 20).

[12] Patent Owner cites to page 39 of the Petition, but the context indicates that Patent Owner appears to have intended to cite to page 33 of the Petition.
[13] Patent Owner cites to pages 29–30 of the Petition, but the context indicates that Patent Owner appears to have intended to cite to pages 23–25 of the Petition.

We disagree that Petitioner has referred to entire display casing 10 as the rear portion of the electronic image assembly. The annotation of "Display Casing 10" in the above-reproduced figure is immediately followed by the words "Containing Display ('*Rear Portion of the Electronic Image Assembly*')." Consistent with the other representations of Petitioner as identified by Patent Owner, we understand that the display as electronic image assembly is contained within display casing 10 and that the rear portion of the electronic image assembly is also within display casing 10. We see no inconsistency between this annotated Figure and Petitioner's other representations. We find Patent Owner's reading of the annotated Figure to be distorted and inaccurate.

We have considered the totality of the evidence before us, including both the evidence of obviousness and the evidence of nonobviousness (discussed in Section II.F. below) and weighed them accordingly. We find that the evidence of obviousness substantially outweighs the evidence of nonobviousness.

For the foregoing reasons, Petitioner has proven by a preponderance of the evidence that claim 2 would have been obvious over Karppanen.

5. Claim 3

Claim 3 depends from claim 2 and further recites: "wherein the substantially planar surface is a plate." Ex. 1001, 10:9–10. Petitioner notes that back cover 28 of Karppanen's device casing 12 is depicted as a plate. Pet. 37 (citing Ex. 1002 ¶¶ 169–172; Ex. 1004, Fig. 1). Patent Owner presents no counter-argument in this regard. Petitioner's assertion is supported by the cited evidence. We are persuaded that Karppanen teaches the further limitation of claim 3.

We have considered the totality of the evidence before us, including both the evidence of obviousness and the evidence of nonobviousness (discussed in Section II.F. below) and weighed them accordingly. We find that the evidence of obviousness substantially outweighs the evidence of nonobviousness. Petitioner has proven by a preponderance of the evidence that claim 3 would have been obvious over Karppanen.

6. Claim 5

Claim 5 depends from claim 1 and recites:[14]

> [5a] The electronic display of claim 1, further comprising: a front display surface spaced apart from the front portion of the electronic image assembly; and
>
> [5b] a front channel defined by the space between the front display surface and the front portion of the electronic image assembly, the front channel forming part of the closed loop gas circulation path.

Ex. 1001, 10:13–19.

Petitioner explains that Karppanen's display casing has a glass front plate in front of and spaced from display element 26. Pet. 37–38 (citing Ex. 1002 ¶¶ 173–176). Petitioner maps the glass front plate of the display casing to the claimed "front display surface" and maps display element 26 to the electronic image assembly. *Id.* Thus, Karppanen teaches a front display surface spaced apart from the front portion of the electronic image assembly.

Petitioner further explains that the gap between front plate 46 and the front of display 26 is a front channel formed at least in part of

[14] The bracketed captions correspond to those used by Petitioner to reference the claim elements. *See* Pet. 113. We use them here for ease of reference, understanding, and consistency.

ducting 66. Pet. 39–40 (citing Ex. 1002 ¶¶ 177–180; Ex. 1004, Fig. 2). Petitioner illustrates with an annotated partial Figure 2 of Karppanen how that front channel forms a part of the closed loop gas circulation path, as reproduced below:

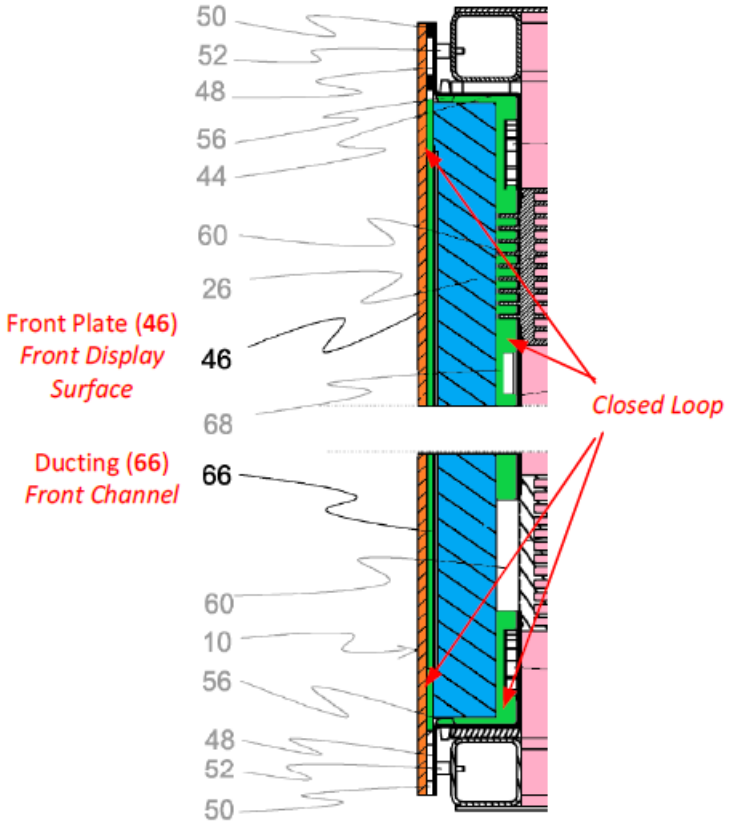

The figure is a cross-sectional view of an electronic information board according to Karppanen. Ex. 1004, 6:7–8. Petitioner has labeled the front display surface, front channel, and the closed loop.

Patent Owner presents no separate argument for claim 5. Petitioner's assertions are supported by the cited evidence. We are persuaded that Karppanen teaches the further limitations of claim 5.

We have considered the totality of the evidence before us, including both the evidence of obviousness and the evidence of nonobviousness (discussed in Section II.F. below) and weighed them accordingly. We find

that the evidence of obviousness substantially outweighs the evidence of nonobviousness. Petitioner has proven by a preponderance of the evidence that claim 5 would have been obvious over Karppanen.

7. Claim 6

Claim 6 depends from claim 1 and further recites:

> at least one electronic component located in the pathway of the closed loop gas circulation path, the at least one electronic component selected from the group consisting of transformers, circuit boards, resistors, capacitors, batteries, power modules, motors, inductors, illumination devices, wiring, wiring harnesses, lights, thermo-electric devices, and switches.

Ex. 1001, 10:20–27.

Petitioner accounts for this limitation on pages 41–42 of the Petition. In particular, Petitioner explains that "Karppanen discloses fans 64 within the closed loop pathway," and "a POSITA would have known that those fans include motors." Pet. 41 (citing Ex. 1002 ¶¶ 181–185). Petitioner also notes that "[a] POSITA would understand that fans include a wiring harness to bring power to the fan motor." *Id.* (citing Ex. 1002 ¶ 185).

Patent Owner presents no separate argument for claim 6. Petitioner's assertions are supported by the cited evidence. We are persuaded that Karppanen teaches the further limitation of claim 6.

We have considered the totality of the evidence before us, including both the evidence of obviousness and the evidence of nonobviousness (discussed in Section II.F. below) and weighed them accordingly. We find that the evidence of obviousness substantially outweighs the evidence of nonobviousness. Petitioner has proven by a preponderance of the evidence that claim 6 would have been obvious over Karppanen.

8. Claim 7

Claim 7 depends from claim 1 and further recites: "a cooling device placed near an entrance to the open loop ambient air flow path for reducing the temperature of ambient air entering the open loop ambient air flow path." Ex. 1001, 10:28–31. Petitioner accounts for claim 7 on pages 42 to 43 of the Petition. Specifically, Petitioner asserts: "Karppanen's system includes cooling fans 36 ('*a cooling device*') near ventilation slots 34 ('*an entrance*') to the cooling space 20 ('*the open loop ambient air flow path*')." Pet. 42 (citing Ex. 1002 ¶¶ 186–189). Petitioner also produces the following annotated version of Karppanen's Figure 1:

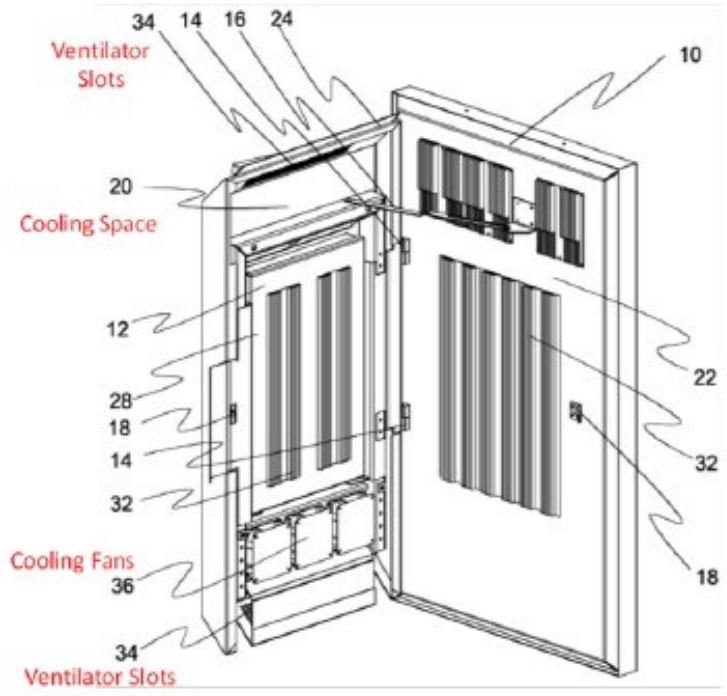

The figure is a perspective view of an electronic information board according to Karppanen. Ex. 1004, 6:4–5. Petitioner has labeled the ventilator slots, the cooling fans, and the cooling space.

Petitioner asserts:

> The cooling fans 34 are "*a cooling device*" that are placed near the ventilator slots 34 to the cooling space 20, i.e., "*an entrance to the open loop ambient air flow path*." The cooling fans 34 reduce the temperature of the ambient air entering the open loop ambient air flow path.

Pet. 43 (citing Ex. 1002 ¶ 189). Mr. Smith-Gillespie testifies that "The cooling fans 34 can reduce the temperature of ambient air entering the open loop ambient air flow path." Ex. 1002 ¶ 189.

Patent Owner asserts that Mr. Smith-Gillespie made a basic scientific error in his declaration. PO Resp. 7. Patent Owner explains:

> In [paragraph] 186 of his Declaration, Smith-Gillespie explains that claim 7 of the '740 Patent recites "a cooling device placed near an entrance to the open loop ambient air flow path for reducing the temperature of ambient air entering the open loop ambient air flow path." Smith-Gillespie then opines that the fans 36 placed in the cooling space 20 of Karppanen are a cooling device for reducing the temperature of ambient air entering the open loop. Ex. 1002 (Smith-Gillespie Dec.), ¶189 ("The cooling fans [36] can reduce the temperature of ambient air entering the open loop ambient air flow path."). However, it is well known that a fan does not reduce the temperature of ambient air. *See* Ex. 2024 at ¶¶112–13. Instead, fans merely move air within an area. If persons are standing in the pathway of air flowing out of the fan, they will feel cooler because additional air is passing by the person and convecting away heat. *Id*. The fan itself, however, does not reduce the temperature of the air that reaches the person within the fan's pathway. This simple error in physics highlights Petitioner's improper level of skill in the art and demonstrates Smith-Gillespie's lack of knowledge and experience in thermal management—especially thermal management of electronic displays.

PO Resp. 7–8. Petitioner responds: "Mr. Smith-Gillespie did not testify that fans alone reduce the temperature of ambient air. Rather, Karppanen's use of

cooling fans 36 contribute to a reduction in the temperature of the ambient air within Karppanen's system." Reply 24 (citing Ex. 1004, 7:21–25).

We agree with Petitioner that Mr. Smith-Gillespie did not testify that fans alone reduce the temperature of ambient air. Nor does the cited testimony say that the fans reduce the temperature of ambient air without providing an air flow. We do not read Mr. Smith-Gillespie's testimony as representing that the temperature of static or non-moving ambient air is reduced by fans. Rather, Mr. Smith-Gillespie simply is indicating that fans 36 can be employed to reduce the temperature of ambient air within a display system by creating an air flow that replaces higher temperature air inside the display system with lower temperature air from outside the display system. That also is what Karppanen indicates. Ex. 1004, 7:16–25 (stating that the temperature of the air in the cooling space is regulated with an air flow achieved by means of cooling fans).

Thus, Patent Owner's argument that Mr. Smith-Gillespie made a basic scientific error is unpersuasive. Patent Owner presents no additional argument for claim 7 other than what it has argued for claim 1. Petitioner's assertions are supported by the cited evidence. We are persuaded that Karppanen teaches the further limitation of claim 7.

We have considered the totality of the evidence before us, including both the evidence of obviousness and the evidence of nonobviousness (discussed in Section II.F. below) and weighed them accordingly. We find that the evidence of obviousness substantially outweighs the evidence of nonobviousness. Petitioner has proven by a preponderance of the evidence that claim 7 would have been obvious over Karppanen.

9. Independent Claim 8

Petitioner addresses claim 8 on pages 43–50 of the Petition. Petitioner notes substantial similarities between independent claims 1 and 8. Pet. 43–50. For instance, Petitioner notes that elements [8pre] and [8a] are identical to elements [1pre] and [1a]. *Id.* at 43. As another example, Petitioner notes that element 8[c] and element 1[b] are identical. *Id.* at 44.

Petitioner notes non-substantive differences. For example, where limitation [1c] recites "a closed loop gas circulation path *about* the electronic image assembly," limitation [8b] recites "a closed loop gas circulation path *encircling* the electronic image assembly" (emphasis added). As another example, where limitation [1d] recites "a common heat exchanger *located in the pathway of* both the closed loop gas circulation oath and the open loop ambient air flow path," limitation [8e] recites "a common heat exchanger *in gaseous communication with* both the closed loop gas circulation path and the open loop ambient air flow path" (emphasis added).

Petitioner explains that limitation [8b] is essentially the same as limitation [1c]. Pet. 43–44. Petitioner explains that limitation [8e] is essentially the same as limitation [1d]. *Id.* at 45–47. Patent Owner does not dispute the above-noted comparison by Petitioner of similarities between claim 1 and claim 8. We are persuaded thereby and proceed further on that basis. Thus, for reasons explained in the context of recitation [1pre] and limitations [1a], [1b], [1c], and [1d], we are persuaded that Karppanen discloses recitation [8pre] and limitations [8a], [8b], [8c], and [8e].

Petitioner specifically accounts for limitations that are present in claim 8 but not in claim 1. *Id.* at 44–50. For instance, limitation [8d] recites: "a substantial planar surface located behind and spaced apart from

the rear portion of the electronic image assembly, the space between the substantial planar surface and the rear portion of the electronic image assembly defining a rear channel." Ex. 1001, 10:39–43.

On page 45 of the Petition, Petitioner presents a color-annotated version of Karppanen's Figure 2, reproduced below:

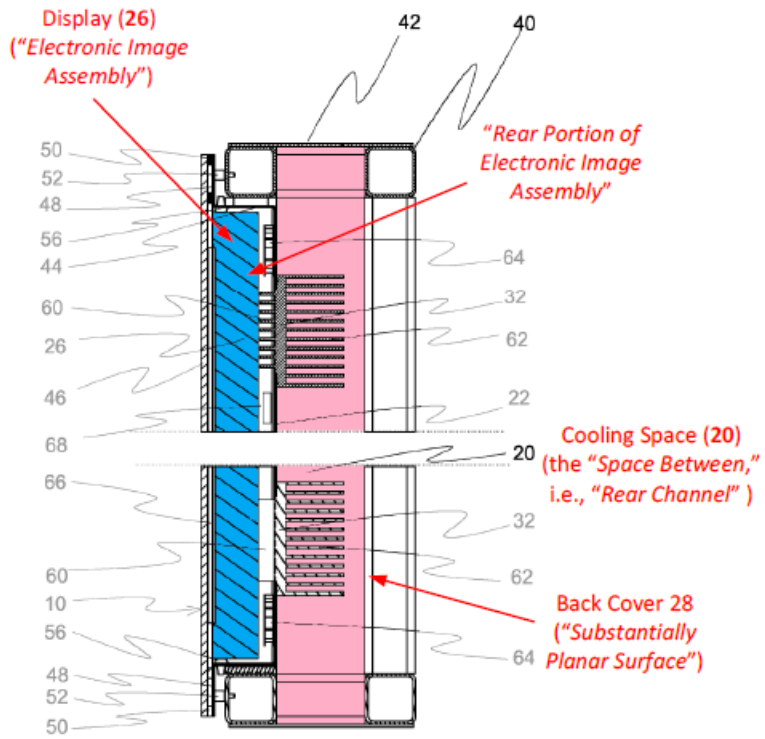

Figure 2 is a cross-section of an embodiment of Karppanen's electronic information board. Ex. 1004, 6:7–8 (color annotations by Petitioner).

Petitioner identifies cooling space 20 (highlighted pink) between the device casing's back cover 28 (a substantially planar surface) and the rear portion of display 26 (electronic image assembly (highlighted blue)) as the claimed rear channel. Pet. 44. On that basis, Petitioner asserts Karppanen discloses limitation [8d]. *Id.* at 45 (citing Ex. 1002 ¶¶ 197–200).

Petitioner's assertions are supported by the cited evidence, notwithstanding Patent Owner's arguments to the contrary.

Patent Owner equates limitation [8d] to what is recited in dependent claim 2, and asserts that the difference in the particular language used is "insubstantial." PO Resp. 31. Patent Owner lumps limitation [8d] with dependent claim 2 and presents its argument only in the specific context of claim 2. *Id*. at 32–36. We have analyzed Patent Owner's argument above in our discussion of claim 2. For the reasons explained above in discussing claim 2, Patent Owner's argument for limitation [8d] is unavailing.

We are persuaded that Karppanen discloses limitation [8d].

Limitation [8f] recites: "at least one fan positioned to force gas through the closed loop gas circulation path." Ex. 1001, 10:47–48. On page 47 of the Petition, Petitioner presents a color-annotated version of Karppanen's Figure 2, reproduced below:

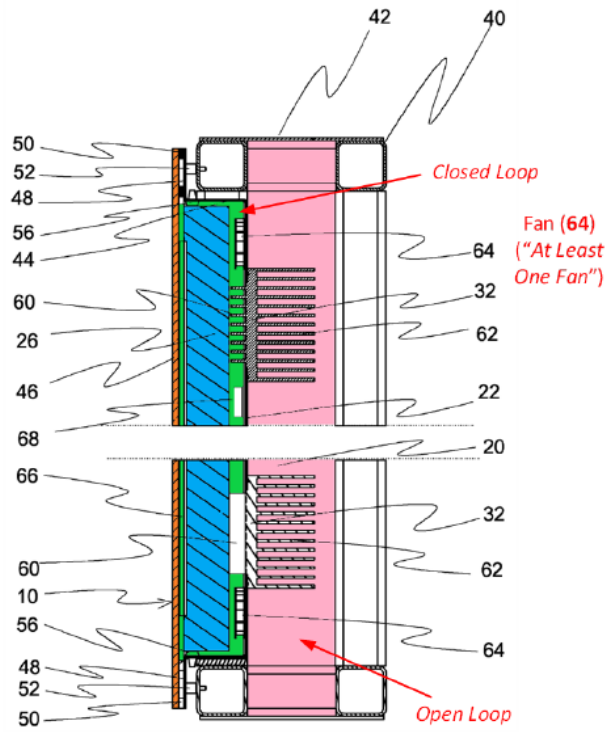

Figure 2 is a cross-section of an embodiment of Karppanen's electronic information board. Ex. 1004, 6:7–8 (color annotations by Petitioner).

Petitioner asserts that Karppanen discloses limitation [8f] "because Karppanen's system includes fans 64 that force the air circulating in the closed pathway (within the closed display casing 10)." Pet. 46 (citing Ex. 1002 ¶¶ 205–208). Petitioner explains that fans 64 circulate air in the space between display element 26 and the walls of display casing 10, and thus provide an air flow circulating the display element where fans 64 force the air to flow past front plate 46 of the device. *Id.* at 47 (citing Ex. 1004, 9:3–8). Therefore, Petitioner asserts that fans 64 are positioned to force gas through the closed loop gas circulation path (highlighted green) between display element 26 and the walls of display casing 10 including through ducting 66. *Id.* at 48 (citing Ex. 1002 ¶ 208).

With regard to these assertions, Patent Owner does not present counter-arguments. Petitioner's assertions are supported by the cited evidence. We are persuaded that Karppanen discloses limitation [8f].

Limitation [8g] recites: "at least one fan positioned to force air through the open loop ambient air flow path." Ex. 1001, 10:49–50. Petitioner asserts that Karppanen discloses limitation [8g] "because Karppanen's system includes fans 36 to force ambient air through cooling space 20." Pet. 48 (citing Ex. 1002 ¶¶ 209–213). Petitioner identifies cooling space 20 as the open loop ambient air flow path. *Id.* Petitioner also cites to the following description in Karppanen: "In the cover 24 there are cooling fans 36, by which the circulation of air through the cooling space is regulated." Ex. 1004, 7:16–22 (cited at Pet. 49).

With regard to these assertions, Patent Owner does not present counter-arguments. Petitioner's assertions are supported by the cited evidence. We are persuaded that Karppanen discloses limitation [8g].

We have considered the totality of the evidence before us, including both the evidence of obviousness and the evidence of nonobviousness (discussed in Section II.F. below) and weighed them accordingly. We find that the evidence of obviousness substantially outweighs the evidence of nonobviousness.

For the foregoing reasons, Petitioner has proven by a preponderance of the evidence that claim 8 would have been obvious over Karppanen.

10. Dependent Claim 9

Claim 9 depends from claim 8 and further recites: "wherein the open loop ambient air flow path is also in gaseous communication with the rear channel." Ex. 1001, 10:51–53.

Petitioner addresses claim 9 on page 50 of the Petition. Petitioner asserts that Karppanen teaches this further limitation and relies on its analysis for limitation [2c]. Pet. 50. Patent Owner does not provide separate argument from those it presents for claim 8 on which claim 9 depends. For the same reasons discussed above in the context of limitation [2c], Petitioner's assertions regarding the added limitation of claim 9 are persuasive. We are persuaded that Karppanen teaches the limitation of claim 9.

We have considered the totality of the evidence before us, including both the evidence of obviousness and the evidence of nonobviousness (discussed in Section II.F. below) and weighed them accordingly. We find that the evidence of obviousness substantially outweighs the evidence of nonobviousness. Petitioner has proven by a preponderance of the evidence that claim 9 would have been obvious over Karppanen.

11. Dependent Claim 11

Claim 11 depends from claim 8 and recites:[15]

> [11a] The electronic display of claim 8, wherein: the common heat exchanger includes first and second gas pathways, the first and second gas pathways being isolated from each other;
>
> [11b] where the first gas pathway is in gaseous communication with the open loop ambient air flow path; and
>
> [11c] where the second gas pathway is in gaseous communication with the closed loop gas circulation path.

Ex. 1001, 10:57–64.

Petitioner explains that Karppanen teaches limitation [11a] because "Karppanen's cooling element 32 ('the common heat exchanger') includes two parts, namely, the first and second heat transfer parts, that provide two pathways that are isolated from each other." Pet. 50. Petitioner asserts that the fins of part 62 extending into the open loop and the fins of part 60 extending into the closed loop respectively define a first air (i.e., gas) pathway, within the cooling space 20, i.e., the open loop, and a second air (i.e., gas) pathway, within the closed loop. *Id.* at 51 (citing Ex. 1002 ¶ 220).

Petitioner explains that Karppanen teaches limitation [11b] because "[t]he first gas pathway formed by the fins of the second part 62 is formed within the cooling space 20, i.e., within the "*open loop ambient air flow path*." Pet. 53 (citing Ex. 1002 ¶¶ 222–223; Ex. 1004, Fig. 2).

Petitioner explains that Karppanen teaches limitation [11c] because "[t]he second gas pathway formed by the fins of the first part 60 is formed

[15] The bracketed captions correspond to those used by Petitioner to reference the claim elements. *See* Pet. 115. We use them here for ease of reference, understanding, and consistency.

within the 'closed loop gas circulation path.'" Pet. 54 (citing Ex. 1002 ¶ 224; Ex. 1004, Fig. 2).

Patent Owner argues that Karppanen "does not disclose a [gas/air] [circulation device/fan] positioned to force [gas/air] through the heat exchanger." PO Resp. 28.[16]

Patent Owner explains:

> The plain language of claim 11 makes clear that the heat exchanger itself includes multiple airflow pathways. A POSITA would understand that it is not enough that the thermal management device "heat exchanger" be located in the path of the closed and [open] loops, but would need to **contain** the closed and open loop itself.

PO Resp. 29. The argument is without merit.

Limitation [11a] recites that the heat exchanger includes first and second pathways. But the first and second pathways are not the open loop ambient air flow path and the closed loop gas circulation path separately recited in claim 8. That the heat exchanger includes first and second pathways does not mean the heat exchanger has to contain the closed and open loops.

The distinction between first and second pathways and the closed and open loops is further confirmed by limitation [11b], which expressly recites: "where the first gas pathway is *in gaseous communication* with the open loop ambient air flow path," and limitation [11c], which expressly recites:

---

[16] Independent claim 8, from which claim 11 depends, recites "at least one fan positioned to force circulating gas through the closed loop gas circulation path," and "at least one fan positioned to force ambient air through the open loop gas circulation path." Ex. 1001, 10:47–50.

"where the second pathway is *in gaseous communication* with the closed loop gas circulation path." Ex. 1001, 10:61–62, 10:63–64 (emphasis added).

Petitioner's assertions are supported by the cited evidence. We are persuaded that Karppanen teaches the further limitations of claim 11.

We have considered the totality of the evidence before us, including both the evidence of obviousness and the evidence of nonobviousness (discussed in Section II.F. below) and weighed them accordingly. We find that the evidence of obviousness substantially outweighs the evidence of nonobviousness.

For the foregoing reasons, Petitioner has proven by a preponderance of the evidence that claims 9, 11, 12, 13, 15, and 16 would have been obvious over Karppanen.

12. Dependent Claim 12

Claim 12 depends from claim 11 and further recites: "wherein the first gas pathway is also in gaseous communication with the rear channel." Ex. 1001, 10:65–67. Petitioner asserts that Karppanen discloses this further limitation. Pet. 54 (citing Ex. 1002 ¶¶ 226–229). In particular, Petitioner explains:

> The cooling space 20 is the "*open loop ambient air flow path*," the first gas pathway defined by the fins of the part 62 is within the cooling space 20, and in gaseous communication with the "*open loop ambient air flow path*." (*Supra*, §§VII.A.3, VIII.I.2.) Thus, the cooling space 20 is part of both the "*first gas pathway*" and the "*rear channel*," and as such, "*the first gas pathway is also in gaseous communication with the rear channel*."

Pet. 55. Patent Owner does not present argument separate from those it presents for claim 11. Petitioner's assertions are supported by the cited

evidence. We are persuaded that Karppanen discloses this further limitation of claim 12.

We have considered the totality of the evidence before us, including both the evidence of obviousness and the evidence of nonobviousness (discussed in Section II.F. below) and weighed them accordingly. We find that the evidence of obviousness substantially outweighs the evidence of nonobviousness. Petitioner has proven by a preponderance of the evidence that claim 12 would have been obvious over Karppanen.

13. Dependent Claim 13

Claim 13 depends from claim 8 and further recites: "wherein the substantially planar surface is a plate." Ex. 1001, 11:1–2.

Petitioner explains: "Claim 13 is identical to claim 3. Therefore, as under this Ground for claim 3, Karppanen discloses the limitations of claim 13." Pet. 56. Patent Owner presents no counter-argument in this regard. For the same reasons discussed above in claim 3, we are persuaded that Karppanen discloses this further limitation of claim 13.

We have considered the totality of the evidence before us, including both the evidence of obviousness and the evidence of nonobviousness (discussed in Section II.F. below) and weighed them accordingly. We find that the evidence of obviousness substantially outweighs the evidence of nonobviousness. Petitioner has proven by a preponderance of the evidence that claim 13 would have been obvious over Karppanen.

14. Dependent Claim 15

Claim 15 depends from claim 8 and recites:

> [15a] The electronic display of claim 8, further comprising: a front display surface spaced apart from the front portion of the electronic image assembly; and
>
> [15b] a front channel defined by a space between the front display surface and the front portion of the electronic image assembly, the front channel forming part of the closed loop gas circulation path.

Ex. 1001, 11:5–11. Petitioner asserts that these limitations of claim 15 are identical to the limitations of claim 5. Pet. 56. Petitioner explains that Karppanen teaches these limitations the same way Karppanen teaches the corresponding limitations in claim 5. *Id.* Patent Owner presents no counter-argument in this regard. For the same reasons discussed above in claim 5, we are persuaded that Karppanen discloses these limitations of claim 15.

We have considered the totality of the evidence before us, including both the evidence of obviousness and the evidence of nonobviousness (discussed in Section II.F. below) and weighed them accordingly. We find that the evidence of obviousness substantially outweighs the evidence of nonobviousness. Petitioner has proven by a preponderance of the evidence that claim 15 would have been obvious over Karppanen.

15. Dependent Claim 16

Claim 16 depends from claim 8 and further recites:

> at least one electronic component located in the pathway of the closed loop gas circulation path, the at least one electronic component selected from the group consisting of transformers, circuit boards, resistors, capacitors, batteries, power modules, motors, inductors, illumination devices, wiring, wiring harnesses, lights, thermo-electric devices, and switches.

Ex. 1001, 11:12–19. Petitioner explains: "Claim 16 is identical to claim 6. Therefore, as under this Ground for claim 6, Karppanen discloses the limitations of claim 16." Pet. 56. Patent Owner presents no counter-argument in this regard. For the same reasons discussed above in claim 6, we are persuaded that Karppanen discloses this limitation of claim 16.

We have considered the totality of the evidence before us, including both the evidence of obviousness and the evidence of nonobviousness (discussed in Section II.F. below) and weighed them accordingly. We find that the evidence of obviousness substantially outweighs the evidence of nonobviousness. Petitioner has proven by a preponderance of the evidence that claim 16 would have been obvious over Karppanen.

16. Independent Claim 17

Petitioner addresses claim 17 on pages 56–61 of the Petition. Petitioner notes substantial similarities between independent claims 8 and 17. Pet. 57–59. For instance, Petitioner notes that elements [17b] and [17c] are identical to elements [8b] and [8e]. *Id.* at 57.

Petitioner also notes non-substantive differences between claim 17 and claims 1 and 8. For example, whereas limitation [1b] recites "an open loop ambient air flow path *behind the* rear portion of the electronic image assembly," limitation [17a] recites "an open loop ambient air flow path *at a* rear portion of the electronic image assembly" (emphasis added). Petitioner asserts that its showing for limitation [1b] also accounts for limitation [17a]. *Id.* As another example, Petitioner compares limitation [17e] and limitation [8d], and explains that except for adding a "rear channel forming a part of the open loop ambient air flow path," limitation [17e] merely reorders the sequence of the recitations in limitation [8d]. *Id.* at 58–59.

Petitioner identifies cooling space 20, already identified as the "open loop ambient airflow path," also as the "rear channel." *Id.* at 59.

Further still, Petitioner compares limitation [17f] with limitation [8f], and explains that limitation [17f] merely adds that the fan forces circulating gas through the common heat exchanger. *Id.* at 59–60. Petitioner then asserts that because limitation [1e] recites "a gas circulation device positioned to force circulating gas through the common heat exchanger," Petitioner's showings for limitation [8f] and limitation [1e] establish that Karppanen discloses limitation [17f]. *Id.* at 60.

Petitioner also compares limitation [17g] with limitation [8g], and explains that limitation [17g] merely adds that the fan forces ambient air through the common heat exchanger. *Id.* Petitioner then asserts that because limitation [1f] recites "an air circulation device positioned to force ambient air through the common heat exchanger," Petitioner's showings for limitation [8g] and limitation [1f] establish that Karppanen discloses limitation [17g]. *Id.*

Patent Owner does not dispute the above-noted comparisons by Petitioner of similarities between claim 17 and claims 1 and 8, and the resulting assertions of Petitioner. We are persuaded thereby and proceed further on that basis.

Petitioner specifically accounts for elements that are present in claim 17 but not in either claim 1 or claim 8. Pet. 56–60.

In its preamble, claim 17 recites: "A cooling system for an electronic image assembly." Ex. 1001, 11:20. Petitioner asserts that Karppanen discloses a cooling system for displays including an LCD which is an electronic image assembly. Pet. 56–57 (citing Ex. 1002 ¶¶ 235–241).

Petitioner also cites to Karppanen's description that its display element "is preferably a TFT LCD display." *Id.* at 20 (citing Ex. 1004, 8:5–9). Petitioner identifies cooling space 20 behind display element 26 and cooling elements 32 that transfer heat from inside the display casing to cooling space 20. *Id.* at 22 (citing Ex. 1002 ¶ 118, Ex. 1004, 7:11–14).

With regard to these assertions, Patent Owner does not present counter-arguments. Petitioner's assertions are supported by the cited evidence. We are persuaded that Karppanen discloses the recitation in the preamble of claim 17.[17]

Limitation [17d] recites: "a front channel defined by a space between a front portion of the electronic image assembly and a front display surface located forward of and spaced apart from the front portion of the electronic image assembly, the front channel forming a part of the closed loop gas circulation path." Ex. 1001, 11:29–12:4.

Petitioner asserts that Karppanen discloses limitation [17d]. Pet. 58 (citing Ex. 1002 ¶ 252). On page 58 of the Petition, Petitioner presents a color-annotated partial version of Karppanen's Figure 2, reproduced below:

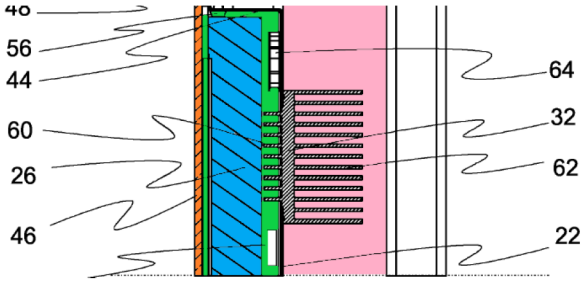

Figure 2 is a cross-section of an embodiment of Karppanen's electronic information board. Ex. 1004, 6:7–8 (color annotations by Petitioner).

[17] It is not necessary to determine whether the preamble recitation is limiting. *See Realtime Data*, 912 F.3d at 1374.

Petitioner explains that Karppanen's display casing includes transparent front plate 46 (highlighted orange) positioned in front of and spaced apart from display element 26 (highlighted blue), which is the electronic image assembly, by a gap (highlighted green). Pet. 37–39 (citing Ex. 1002 ¶¶ 173–176; Ex. 1004, 7:31–38).

On page 40 of the Petition, Petitioner presents another color-annotated partial version of Karppanen's Figure 2, reproduced below:

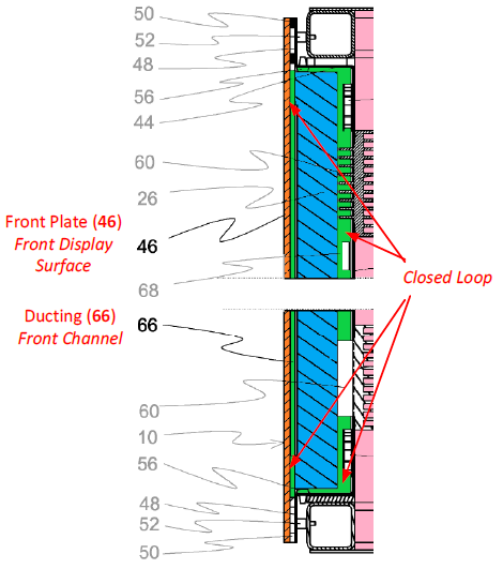

Figure 2 is a cross-section of an embodiment of Karppanen's electronic information board. Ex. 1004, 6:7–8 (color annotations by Petitioner).

Petitioner explains that Karppanen teaches the claimed front channel because the gap between front plate 46 and the front of display 26 is a front channel formed at least in part by ducting 66. Pet. 39 (citing Ex. 1002 ¶¶ 177–180), 58 (citing Ex. 1002 ¶ 252). Petitioner further explains that Karppanen describes ducting 66 as between display casing 10 and display element 26 and also as facilitating an air flow circulating display element 26, where fans 64 force the air of the inner casing to flow past front plate 46. *Id.* (citing Ex. 1004, 9:3–8).

With regard to these assertions, Patent Owner does not present counter-arguments. Petitioner's assertions are supported by the cited evidence. We are persuaded that Karppanen discloses limitation [17d].

We have considered the totality of the evidence before us, including both the evidence of obviousness and the evidence of nonobviousness (discussed in Section II.F. below) and weighed them accordingly. We find that the evidence of obviousness substantially outweighs the evidence of nonobviousness.

For the foregoing reasons, Petitioner has proven by a preponderance of the evidence that claim 17 would have been obvious over Karppanen.

17. Dependent Claims 18 and 20

Claim 18 depends from claim 17 and further recites: "wherein the substantially planar surface is a plate." Ex. 1001, 12:17–18. Claim 20 depends from claim 17 and further recites:

> at least one electronic component located in the pathway of the closed loop gas circulation path, the at least one electronic component selected from the group consisting of transformers, circuit boards, resistors, capacitors, batteries, power modules, motors, inductors, illumination devices, wiring, wiring harnesses, lights, thermo-electric devices, and switches.

Ex. 1001, 12:22–29.

Petitioner explains: "Claims 18 and 20 are identical, respectively, to claims 3 and 6. Therefore, as under this Ground for claims 3 and 6, Karppanen discloses the limitations of claims 18 and 20." Pet. 61. Patent Owner presents no counter-argument in this regard. For the same reasons discussed above for claims 3 and 6, we are persuaded that Karppanen discloses these limitations of claims 18 and 20, respectively.

We have considered the totality of the evidence before us, including both the evidence of obviousness and the evidence of nonobviousness (discussed in Section II.F. below) and weighed them accordingly. We find that the evidence of obviousness substantially outweighs the evidence of nonobviousness. Petitioner has proven by a preponderance of the evidence that claims 18 and 20 would have been obvious over Karppanen.

E. Alleged Obviousness of Claims 1–3, 5, 6, 8, 9, 11–13, 15–18, and 20 over Yare

1. Overview of Yare

Yare relates to a display cabinet including a sealed airtight compartment for mounting a display system, and a "heat transfer means" such as a corrugated "heat exchanger" to dissipate heat from the airtight compartment to the surrounding environment through thermal communication with an unsealed atmospheric zone. Ex. 1005, code (57). Yare states that "[t]he display system may include one or more of a plasma display, an LCD display, a TFT display, a CRT display, an LED display, a projection display." *Id.*; *see also id.* at 3:17–18.

Yare further states that its display cabinet has improved cooling facilities and is particularly suitable for use in providing large scale displays in public places. *Id.* at 1:4–6. Yare describes:

> In a preferred embodiment, a zone of the cabinet containing the display system is sealed to the external environment. The sealed zone includes an internal cooling system that is not open to atmospheric air. Atmospheric air is drawn into a separate zone that allows heat to be exchanged between the two zones. Heat is then removed by expulsion of the heated atmospheric air from the casing.

Id. at 2:8–12.

Regarding the zone into which atmospheric air is drawn, Yare describes:

> The display cabinet may further comprise an atmospheric zone, the heat transfer means being arranged to communicate heat from the substantially atmospherically sealed zone to the atmospheric zone.
>
> The atmospheric zone may include air transfer means arranged to draw air from outside the cabinet and expel air in the atmospheric zone heated by the heat transfer means.
>
> The air transfer means may include one or more fans.
>
> The heat transfer means may comprise a heat exchanger.

Id. at 2:19–29.

Regarding the sealed zone, Yare describes:

> The substantially atmospherically sealed zone may include air circulation means arranged to circulate air along the heat transfer means.
>
> The air circulation means may include a baffle plate.
>
> The substantially atmospherically sealed zone may include air pressurization means arranged to project air within the atmospherically sealed zone [to] circulate air along the mounted display.
>
> The air pressurisation means may include one or more fans.

Id. at 3:1–11.

Figure 4 of Yare, annotated by Petitioner and appearing on page 17 of the Petition, is reproduced below:

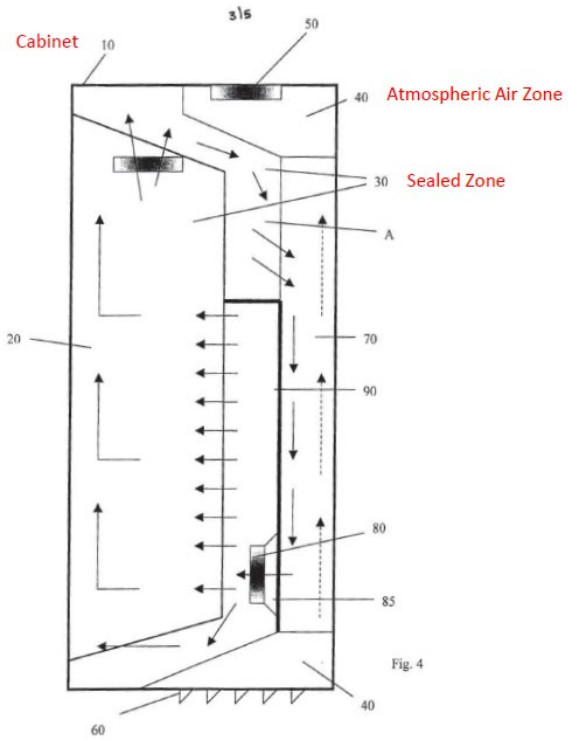

Figure 4 is a partial cross-sectional view of a system according to Yare, with color annotations by Petitioner.

In the above-reproduced Figure, "[d]otted arrows show movement of air in the atmospheric air zone 40 whilst solid arrows show movement of air in the sealed zone 30." Ex. 1005, 4:25–27.

Yare describes:

> Air is drawn through the atmospheric air zone 40 by fans 50. As the air is drawn through the atmospheric air zone 40 it passes across one or more surfaces of the heat exchanger 70. Similarly, air within the sealed zone 30 is drawn into the heat exchanger 70 behind the baffle plate 90 by the fans 80 at point A and passes across one or more other surfaces of the heat exchanger 70.
>
> Air is circulated within the sealed zone 30 due to operation of the fans 80 within the cabinet and fans 25 within the display 20. Air coming into contact with hot components of the display 20 absorbs some of the heat. Due to operation of the fans 25 and 80 and orientation of the baffle plate 90, air within the sealed zone

> 30 is directed along one or more surfaces of the heat exchanger 70 around the baffle plate 90. Heat is transferred by the heat exchanger 70 from hot air in the sealed zone 30 to cooler atmospheric air within the atmospheric air zone 40. Heated air in the atmospheric air zone 40 is eventually ejected from the cabinet via exhausts in the fans 50.
>
> The cooled air in the sealed zone is then forced through the fans 80 at the base of the heat exchanger 70 into a pressure zone 85.
>
> As air is forced into the pressure zone 85, existing air in the pressure zone 85 is forced through vents in the rear portion 35 of the display 20. The air circulates around the display 20, aided by standard internal cooling system of the display 20. In the illustrated embodiment, the internal cooling system includes the fans 25. The air is heated by hot components as it circulates, and is drawn upwards by the fans 25 within the display unit and blown out of the rear portion 35 for the cycle to continue.

Id. at 4:29–5:20.

2. Independent Claim 1

a) Recitation [1 pre]

In its preamble, claim 1 recites "[a]n electronic display." Ex. 1001, 9:54. Petitioner asserts that Yare discloses an electronic display because "Yare discloses a cabinet 10 having 'improved cooling facilities' and a display 20." Pet. 61 (citing Ex. 1002 ¶¶ 265–268).

b) Limitation [1a]

Claim 1 recites: "[An electronic display comprising:] an electronic image assembly having a front portion and a back portion." Ex. 1001, 9:55–56. Petitioner asserts that Yare discloses limitation [1a] "because Yare's system includes a display 20 that may be an LCD." Pet. 62. Petitioner identifies Yare's display system 20 as the claimed electronic image assembly and explains that "[one of ordinary skill in the art] would have known that an LCD has a liquid crystal panel ('*front portion*') and a

backlight ('*rear portion*')." *Id.* at 63 (citing Ex. 1002 ¶¶ 270–271). Petitioner states that Yare's "LCD 20" is an electronic image assembly. Pet. 62–63 (citing Ex. 1002 ¶ 269).

Petitioner's characterization of Yare is problematic. The reference numeral "20" in Yare refers to an entire "display system" which may include an LCD, and which is described as including fans. Ex. 1005, code (57), 5:1–2. Display 20 is not itself just an LCD as Petitioner asserts. Display system 20 is described as "may include one or more of a plasma display, an LCD display, a TFT display, a CRT display, an LED display, a projection display."

c) Limitation [1b]

Claim 1 recites "an open loop ambient air flow path behind the rear portion of the electronic image assembly." Ex. 1001, 9:57–58. Petitioner asserts that Yare discloses this limitation "because Yare's system includes an atmospheric air zone 40 for the flow of ambient air, which is located behind the display 20." Pet. 64–65 (citing Ex. 1002 ¶¶ 274–277). Petitioner explains:

> Yare's cabinet **10** "includes an **atmospheric air zone 40**" where "[a]ir from the outside of the cabinet **10** is drawn through vents **60** into the atmospheric air zone **40** by fans **50**" passes therethrough, and is "then expelled from the cabinet **10** through the fans **50**. (Ex. 1005, 4:11–16, FIGS. 1–4.) Thus, the atmospheric air zone **40** is "*an open loop ambient airflow path*."

Id. at 65.

On page 66 of the Petition, Petitioner presents an annotated version of Yare's Figure 4, reproduced below:

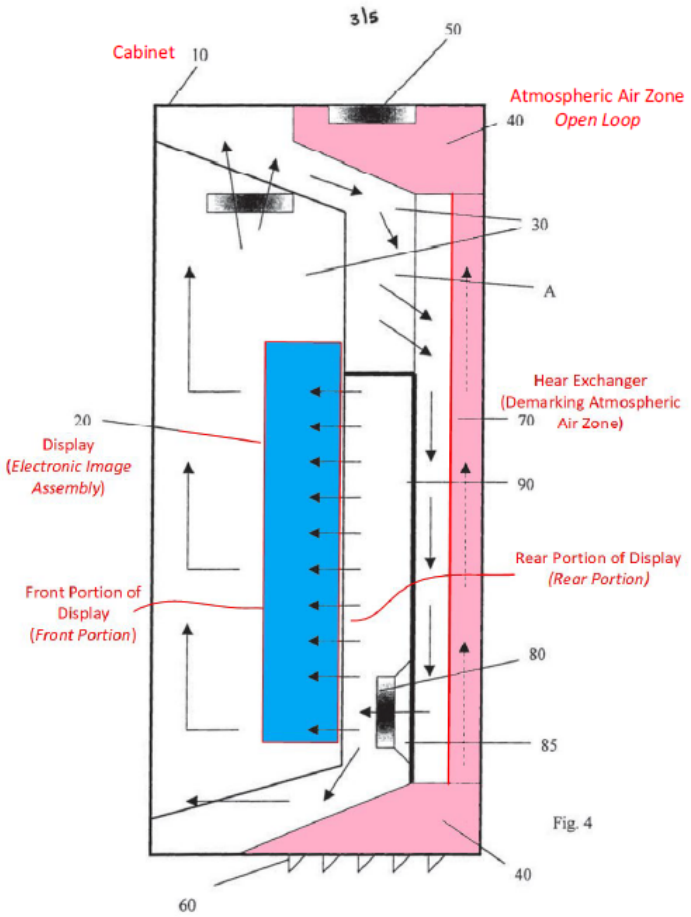

Figure 4 of Yare shows a partial cross section of Yare's display system, with color annotations by Petitioner. Ex. 1005, 3:25–27.

In this annotated figure, Petitioner highlights in blue what it regards as Yare's display 20, and highlights in pink Yare's atmospheric air zone 40, which Petitioner identifies as the claimed open loop ambient air flow path. Pet. 66. As shown in the figure, atmospheric air zone 40 is behind display 20. Petitioner asserts that in Figure 4, the dotted arrows show movement of air in atmospheric air zone 40. *Id.* at 65 (citing Ex. 1005, 4:24–27).

d) Limitation [1c]

Claim 1 further recites: "a closed loop gas circulation path about the electronic image assembly." Ex. 1001, 9:59–60. As noted above in discussing element [1a], Petitioner identifies "LCD 20" as the claimed "electronic image assembly." Pet. 62–63. Petitioner asserts Yare discloses this limitation "because Yare's system includes a sealed zone **30** wherein air is circulated within the sealed zone and around the display **20**." *Id.* at 67 (citing Ex. 1002 ¶ 278–285).

On page 68 of the Petition, Petitioner presents an annotated version of Figure 4 of Yare, reproduced below:

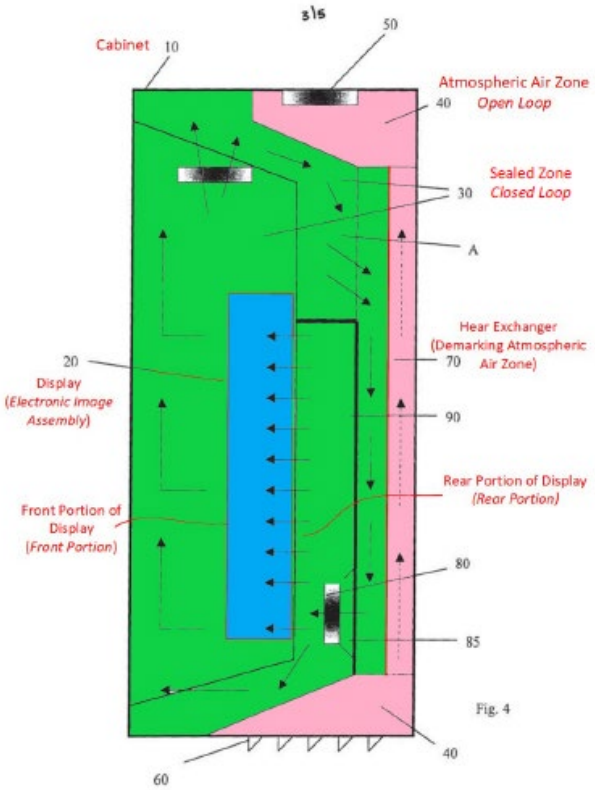

Figure 4 shows a partial cross section of Yare's display system, with color annotation by Petitioner. Ex. 1005, 3:25–27.

Petitioner explains:

> Yare discloses "[a] cabinet **10** [] arranged to contain a display **20**" that "is sealed within the cabinet in a **sealed zone 30**" where "[v]ents and other venting means (not shown) allow air to travel through a rear portion **35** of the display **20**, although **air is sealed within the sealed zone 30**." (Ex. 1005, 4:4–9, FIGS. 1, 4)
>
> "[T]he sealed zone **30** is cooled without the ingress of atmospheric air" (id., 6:1–2), and "[t]he **sealed zone 30 and atmospheric air zone 40**, **are sealed from each other** to prevent the passage of air, dirt, and the like." (*Id.*, 4:19–20, FIGs. 1, 4). Per Yare, "[a]ir is circulated within the sealed zone **30** due to operation of the fans **80** within the cabinet and fans **25** within the display **20**." (*Id.*, 5:1–2.) Yare also states that the "**solid arrows show movement of air in the sealed zone 30**." (*Id.*, 4:24–27, Figure 4.)

Pet. 67.

Petitioner further explains that in the annotated figure above, it has depicted "display 20" in blue, though "display 20" actually is not illustrated in Yare's Figure 4. *Id.* at 68. According to Petitioner, one of ordinary skill in the art in 2008 would have known "that the LCD in Yare is placed within the cabinet at least some distance away from the front of the cabinet." *Id.* at 69. Specifically, Petitioner explains that the solid arrows in Figure 4 show the flow of air in sealed zone 30 and that the "L"-shaped arrows show that the air flows in front of the display, in the space between the transparent outer surface of cabinet 10 and the front of where display 20 would be located. *Id.* (citing Ex. 1002 ¶ 284). On that basis, Petitioner asserts that "the flow of air within the sealed zone 30 encircles the display 20." *Id.*

Patent Owner disagrees that Yare's Figure 1 does not illustrate the location of display system 20. PO Resp. 37, 42. Patent Owner asserts that

in all figures of Yare, "Yare shows the electronic display abutting the front cover of cabinet 10." *Id.* at 37; *see also id.* at 49. In support of this argument, Patent Owner presents an annotated Figure 1 of Yare on page 40 of the Patent Owner Response, reproduced below:

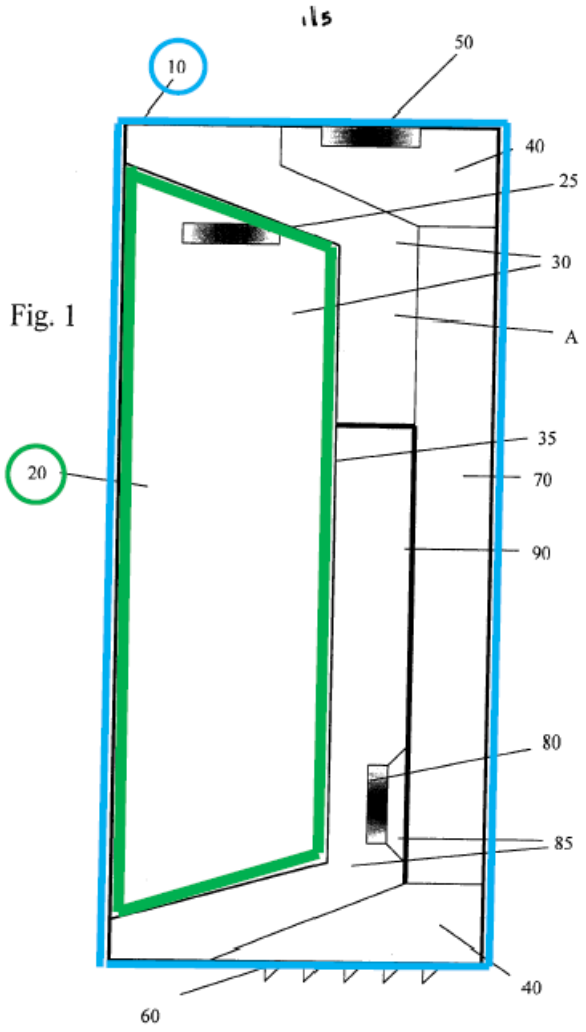

Figure 4 of Yare shows a partial cross section of Yare's display system. Ex. 1005, 3:25–27. Patent Owner has annotated cabinet 10 blue and display system 20 green.

We need not resolve the parties' dispute over the precise disposition of display system 20 within cabinet 10 in order to reach a conclusion on Petitioner's obviousness contentions. As we already noted above in

discussing limitation [1a], Petitioner misreads display system 20 in Yare as itself an LCD, rather than as a configured system containing an LCD and other parts such as a fan. *See* Ex. 1005, code (57), 5:1–2. We also need not reach Petitioner's alternative contention that placing display 20 at a location spaced apart from the front of cabinet 10 would have been obvious to one of ordinary skill in the art either over Yare alone or over Yare and the knowledge of one of ordinary skill in the art (Pet. 70), because placing display system 20 at such a location does not help Petitioner.

As discussed above, Yare teaches that display system 20 is not itself an LCD but merely contains an LCD. Regardless of the disposition of display 20 within cabinet 10, Petitioner has not persuasively shown that Yare teaches a closed loop air circulation path around the LCD within display 20. Notably, Petitioner in the Petition does not discuss air flow within display 20. During oral hearing, counsel for Petitioner expressly acknowledged that the LCD is a component within element 20 and that element 20 has its own casing. Paper 51, 30:12–14.

Patent Owner correctly asserts that "the claim language requires the closed loop to be traveling around the **electronic image assembly** [the LCD inside display system 20], not the **electronic display** [display system 20]." PO Resp. 40. Patent Owner also correctly asserts:

> *Yare does not describe any details regarding where the electronic image assembly may be located within the display 20*, if an electronic image assembly is present at all (Yare describes the display may also be electronic products that do not contain an electronic image assembly—such as a light projector). Ex. 1005 (Yare), 3:17–20; Ex. 2024, ¶¶129–32. As discussed above, the location of the electronic image assembly, and its orientation to the front of the display [display system 20], will be

> different from panel type to panel type, brand to brand, and model to model. Ex. 2024, ¶130. *Yare does not concern or describe the unique cooling systems [within display system 20] for any of those displays*. *Id*. Instead, Yare merely states that the display 20 is located within the sealed zone 30, and that air within the sealed zone cools the display 20 by "[v]ents or other ventilation means (not shown) [ ] allow air to travel through [a] rear portion 35 o[f] the display [20]." Ex. 1005 (Yare) at 4:4–9.

Id. at 41. We also agree with Patent Owner that "Petitioner and its expert confuse the display system 20—which is an electronic display—with an electronic image assembly [LCD]." *Id*.

At oral hearing, counsel for Petitioner attempted to clarify the confusion by explaining that when using the term "LCD 20" in the Petition in the context of identifying an electronic image assembly (limitation [1a]), Petitioner meant and intended it to refer "to the LCD that is inside element 20," not element 20. Paper 51, 28:24–29:4. Even if this were true, we find that the Petition does not reasonably convey such a mapping. *See, e.g.*, Pet. 67 ("Yare discloses this claim element because Yare's system includes a sealed zone 30 wherein air is circulated within the sealed zone and around the display 20."). The burden of proof is on Petitioner, and we are bound to decide the issues as they are raised in the Petition. *See SAS Inst., Inc. v. Iancu*, 138 S. Ct. 1348, 1355 (2018) ("[I]n an inter partes review the petitioner is master of its complaint and normally entitled to judgment on all of the claims it raises, not just those the decisionmaker might wish to address."). We decline to consider arguments that are not rooted in the Petition.

For the foregoing reasons, we are not persuaded that Yare teaches or would have suggested limitation [1c].

e) Limitation [1d]

Claim 1 recites: "a common heat exchanger located in the pathway of both the closed loop gas circulation path and the open loop ambient air flow path." Ex. 1001, 9:61–63. Petitioner asserts that Yare discloses this limitation "because Yare's system includes a heat exchanger 70." Pet. 70.

Because Petitioner has not persuasively accounted for the closed loop gas circulation path of limitation [1c], as discussed above, Petitioner also has not persuasively shown a common heat exchanger in the pathway of the closed loop air circulation path as is recited in limitation [1d]. We are not persuaded that Yare teaches or would have suggested limitation [1d].

f) Limitation [1e]

Claim 1 recites: "a gas circulation device positioned to force circulating gas through the common heat exchanger." Ex. 1001, 9:64–65. Petitioner asserts that Yare discloses this limitation "because Yare's system includes fans 80 that force air circulating in the closed loop pathway through the front side of the heat exchanger 70 ('*the common heat exchanger*')." Pet. 73 (citing Ex. 1002 ¶¶ 291–302).

Because Petitioner has not persuasively shown a common heat exchanger in the pathway of a closed loop air circulation path as is recited in limitation [1d], Petitioner also has not persuasively accounted for "a gas circulation device positioned to force circulating gas through the common heat exchanger" as is required by limitation [1e]. We are not persuaded that Yare teaches or would have suggested limitation [1e].

g) Limitation [1f]

Claim 1 recites: "an air circulation device positioned to force ambient air through the common heat exchanger." Ex. 1001, 9:66–67. Petitioner

asserts that Yare discloses this limitation "because Yare's system includes fans 50 to force ambient air through the atmospheric air zone 40, and through the heat exchanger 70 ('the *common heat exchanger'*)." Pet. 76 (citing Ex. 1002 ¶¶ 303–310).

Because Petitioner has not adequately shown a common heat exchanger in the pathway of a closed loop air circulation path as is recited in limitation [1d], Petitioner also has not adequately accounted for "an air circulation device positioned to force ambient air through the common heat exchanger" as is required by limitation [1f]. We are not persuaded that Yare teaches or would have suggested limitation [1f].

h) Conclusion

Even without considering the objective evidence of nonobviousness submitted by Patent Owner, we determine that for reasons discussed above, Petitioner has not shown that the teachings of Yare would have rendered obvious the subject matter of claim 1. Petitioner has not proven by a preponderance of the evidence that claim 1 would have been obvious over Yare.

3. Independent Claim 8

Petitioner relies on its analysis from limitations [1c] and [1d] for limitations [8b] and [8e], respectively. Pet. 92, 95–96.

For the same reasons discussed above as to why Petitioner has not persuasively shown limitation [1c] is taught or would have been suggested by Yare, Petitioner has not shown that limitation [8b] is taught or would have been suggested by Yare. For the same reasons discussed above as to why Petitioner has not adequately shown limitation [1d] is taught or would

have been suggested by Yare, Petitioner has not shown that limitation [8e] is taught or would have been suggested by Yare.

Even without considering the objective evidence of nonobviousness submitted by Patent Owner, we determine that for reasons discussed above, Petitioner has not shown that the teachings of Yare would have rendered obvious the subject matter of claim 8. Petitioner has not proven by a preponderance of the evidence that claim 8 would have been obvious over Yare.

4. Independent Claim 17

Petitioner relies on its analysis from limitations [8b] and [8e] for limitations [17b] and [17c], respectively. *Id.* at 104.

For the same reasons discussed above as to why Petitioner has not persuasively shown limitation [8b] is taught or would have been suggested by Yare, Petitioner has not shown that limitation [17b] is taught or would have been suggested by Yare. For the same reasons discussed above as to why Petitioner has not adequately shown limitation [8e] is taught or would have been suggested by Yare, Petitioner has not shown that limitation [17c] is taught or would have been suggested by Yare.

Even without considering the objective evidence of nonobviousness submitted by Patent Owner, we determine that for reasons discussed above, Petitioner has not shown that the teachings of Yare would have rendered obvious the subject matter of claim 17. Petitioner has not proven by a preponderance of the evidence that claim 17 would have been obvious over Yare.

5. Dependent Claims 2, 3, 5, and 6

Claims 2, 3, 5, and 6 each depend, directly or indirectly, from claim 1. Ex. 1001, 10:1–10, 10:13–27. As such, each incorporates all of the limitations from independent claim 1. The deficiency of Petitioner's analysis for limitation [1c], discussed above, equally applies to claims 2, 3, 5, and 6. Even without considering the objective evidence of nonobviousness submitted by Patent Owner, we determine that for reasons discussed above, Petitioner has not proven by a preponderance of the evidence that any of claims 2, 3, 5, and 6 would have been obvious over Yare.

6. Dependent Claims 9, 11–13, 15, and 16

Claims 9, 11–13, 15, and 16 each depend, directly or indirectly, from claim 8. Ex. 1001, 10:51–53, 10:57–11:2, 11:5–19. As such, each incorporates all of the limitations from independent claim 8. The deficiency of Petitioner's analysis for limitation [8b] and limitation [8e], discussed above, equally applies to claims 9, 11–13, 15, and 16. Even without considering the objective evidence of nonobviousness submitted by Patent Owner, we determine that for reasons discussed above, Petitioner has not proven by a preponderance of the evidence that any of claims 9, 11–13, 15, and 16 would have been obvious over Yare.

7. Dependent Claims 18 and 20

Claims 18 and 20 each depend directly from claim 17. Ex. 1001, 12:17–18, 12:22–29. As such, each incorporates all of the limitations from independent claim 17. The deficiency of Petitioner's analysis for limitation [17e], discussed above, equally applies to claims 18 and 20. Even without considering the objective evidence of nonobviousness submitted by

Patent Owner, we determine that for reasons discussed above Petitioner has not proven by a preponderance of the evidence that either claim 18 or claim 20 would have been obviousness over Yare.

F. Secondary Considerations — Objective Evidence of Nonobviousness

Patent Owner submits evidence of nonobviousness pertaining to alleged satisfaction of long-felt need, failure of others, copying by Petitioner, industry praise, commercial success, and licensing of the '740 patent. PO Resp. 56–67. It is well established that in order to be accorded substantial weight to secondary considerations in an obviousness analysis, the evidence of secondary considerations must have a nexus to the claims, i.e., there must be a legally and factually sufficient connection between the evidence and the patented invention. *Fox Factory, Inc. v. SRAM, LLC*, 944 F.3d 1366, 1373 (Fed. Cir. 2019); *Henny Penny Corp. v. Frymaster LLC*, 938 F.3d 1324, 1332 (Fed. Cir. 2019).

A patentee is entitled to a presumption of nexus "when the patentee shows that the asserted objective evidence is tied to a specific product and that product embodies the claimed features, and is coextensive with them." *Fox Factory*, 944 F.3d at 1373. Objective evidence of nonobviousness must be commensurate in scope with the claims. *In re Kulling*, 897 F.2d 1147, 1149 (Fed. Cir. 1990). Where nexus cannot be presumed, "the patent owner is still afforded an opportunity to prove nexus by showing that the evidence of secondary considerations is the 'direct result of the unique characteristics of the claimed invention.'" *Fox Factory*, 944 F.3d at 1373–74. Patent Owner bears the burden of establishing that a nexus exists between the evidence of secondary considerations and the patented invention. *Id.* at 1373.

Further, copying as an objective indicia of nonobviousness "requires evidence of *efforts to replicate a specific product*, which may be demonstrated through internal company documents, direct evidence such as disassembling a patented prototype, photographing its features, and using the photograph as a blue print to build a replica, or access to the patented product combined with substantial similarity to the patented product." *Wyers v. Master Lock Co.*, 616 F.3d 1231, 1246 (Fed. Cir. 2010) (emphasis added).

1. Alleged Failure of Others

Patent Owner argues that Samsung "failed to identify an effective solution" to the "enormous thermal challenge" for outdoor displays, and "failed repeatedly in its effort to develop outdoor LCD displays." PO Resp. 56–57. Specifically, Patent Owner asserts that Petitioner "began its outdoor LCD display development starting at least by 2005." *Id.* at 57 (citing Ex. 2029, 45:22–46:11). This assertion is not disputed by Petitioner. Patent Owner asserts that "Samsung was not able to introduce an actual display product to the market." *Id.* (citing Ex. 2029 (Petitioner's employee Sung Ki Kim's deposition transcript), 46:7–15). We see no such testimony by Mr. Sung Ki Kim in the cited deposition transcript. Mr. Sung Ki Kim actually testified that Petitioner launched an outdoor LCD display product "around 2010 through 2012." Ex. 2029, 46:16–47:2.

Patent Owner suggests that Petitioner's product in "the 2010 to 2012 timeframe" was a failure because Petitioner "resorted to using air-conditioning to provide cooling." PO Resp. 57. The assertion is not adequately supported by record evidence, because what constitutes an "effective solution" is not specified by Patent Owner. Patent Owner's

statement of Petitioner failing to identify an "effective solution" is subjective and leaves much to speculation.

Petitioner introduced another product ("OHD product") in 2013–2015. Ex. 2029, 49:9–17. Patent Owner asserts that Petitioner's OHD product was a failure because Mr. Sung Ki Kim testified that in the OHD product the generated heat "was not being taken out well" which resulted in a rise in temperature and [redacted] PO Resp. 57 (citing Ex. 2029, 51:1–9). We do not read Mr. Sung's testimony as indicating that the OHD product always produced [redacted] when used outdoors. Rather, when read in context, we understand the testimony as indicating that the OHD product may become overheated in some circumstances and produce [redacted]

As noted above, the meaning of "effective solution" is not specified by Patent Owner. Effectiveness at a particular level is not claimed. There is no showing by Patent Owner that Petitioner's products failed for lack of claimed features. Further, the introduction of the OHD product does not mean the previously introduced product in the 2010 to 2012 time frame was a failure.

We are not persuaded by Patent Owner that Petitioner had a "**decade of failures** between 2005 and 2015." *See* PO Resp. 58. Patent Owner has not shown that Petitioner experienced any "failure" in attempting to provide an "effective solution" for outdoor displays or to develop outdoor LCD displays.

2. Alleged Satisfaction of Long-Felt Need

Patent Owner asserts:

> Around the early 2000s, larger LCDs of 32-inches and above began to appear in the market. Those larger display screens faced new thermal challenges, particularly when used in an outdoor environment. *See, e.g.*, Exs. 2025-2026, 2038, 2047. Samsung itself explains that companies had "wanted their messages outdoors" but "were challenged by a variety of issues during the early years."

PO Resp. 56. Patent Owner characterizes this need as "for displays with effective cooling to enable outdoor use." Sur-reply 18.[18]

We note that the alleged need already would have been met or satisfied, when Karppanen, which discloses every element of every challenged claim, was published on October 18, 2007. Ex. 1004, code (43). Karppanen expressly states: "Another objective of the invention is to provide an electronic information board, which tolerates well external variations of temperature and is thereby suitable for installation outdoors." *Id*. at 3:10–13.

Patent Owner also fails to show how the claimed invention satisfied the alleged need for effective outdoor cooling. *See Sjolund v. Musland*,

---

[18] We find Patent Owner's articulation of the alleged long-felt need to be vague and subjective. No specific measure is indicated for determining what is or is not "effective." In addition, we note that Patent Owner acknowledges (PO Resp. 57) prior art from Samsung showing it was known to cool displays for outdoor use. *See, e.g.*, Ex. 2033 ¶ 3 (Samsung patent application directed to "a display device that is usable outdoors and prevents . . . a rise in temperature of a display part"); Ex. 2035, 1:18–20, 2:32–47 (Samsung patent directed to "a liquid crystal display device to be installed outdoors" that includes a heat radiating member and fans). This undermines Patent Owner's articulation of the alleged need.

847 F.2d 1573, 1582 (Fed. Cir. 1988) (holding that a proponent of objective evidence of long-felt need must show that "the *claimed invention* satisfied a long felt need"). Patent Owner states in conclusory fashion that "[d]espite the demand for outdoor displays, no one (including Samsung, despite having begun attempting to develop outdoor displays at least by 2005) was successful until Mr. Dunn and Mr. Hubbard conceived of their invention." PO Resp. 67. Patent Owner cites no evidence for this proposition. Thus, Patent Owner's assertions regarding Mr. Dunn's and Mr. Hubbard's invention satisfying the alleged need are based on unsupported attorney argument. Accordingly, "we conclude that the nexus between the claimed invention and the purported long-felt, unmet need is too attenuated to provide a persuasive rationale for nonobviousness." *In re Karpf*, 758 F. App'x 960, 965 (Fed. Cir. 2019).

Additionally, regarding providing a solution to an unsolved problem in the art, the Court of Customs and Patent Appeals stated: "an allegation to this effect [solving an unsolved problem] is not evidence of unobviousness unless it is shown, as was not done here, that the widespread efforts of skilled workers having knowledge of the prior art had failed to find a solution to the problem." *In re Allen*, 324 F.2d 993, 997 (CCPA 1963) (citing *Toledo Pressed Steel Co. v. Standard Parts, Inc.*, 307 U.S. 350, 356 (1939)). There has been no showing by Patent Owner that "widespread efforts" of skilled workers having knowledge of the prior art had failed to find a solution to the problem.

3. Alleged Copying by Petitioner

As further objective evidence that the challenged claims are nonobvious, Patent Owner contends that Petitioner's 75- and 85-inch OHF products copied the system of claim 1. PO Resp. 58–61; Sur-reply 21–22. Patent Owner cites two documents and testimony from Samsung employees regarding Samsung's teardown and analysis of large-format and mid-sized versions of [redacted] products. PO Resp. 60–61 (citing Ex. 2029, 139:7–16 (Sung Ki Kim); Ex. 2030 (Sungsu Lee), 184:15–191:8; Ex. 2031, 77:13–81:16 (Wunkil Lee); Exs. 2042 (slide deck for [redacted] 86-inch product teardown compared to Petitioner's 85-inch OHF product), 2043 (photos for [redacted] 55-inch product teardown).

Patent Owner also provides a claim chart (Ex. 2039) and corresponding testimony from Dr. Pokharna to show how Petitioner's 75- and 85-inch OHF products infringe or practice claims 1, 5, and 6 of the '740 patent. PO Resp. 58 (citing Ex. 2039; Ex. 2024 ¶¶ 186–187). Patent Owner puts forth evidence from a Petitioner installation guide for Petitioner's 75- and 85-inch OHF products to show how a cooling fan is used to take in outside air to lower the internal temperature and discharge the hot air. PO Resp. 58 (citing Ex. 2053).

Patent Owner also provides a claim chart to show how its own 75-inch and 86-inch display products meet all of the elements of claim 1 of the '740 patent. PO Resp. 60 (citing Ex. 2054 (claim chart)).

Patent Owner contends the evidence it presented is probative objective evidence of copying because copying merely "requires duplication of features of the patentee's work based on access to that work."

Sur-reply 21 (quoting *Institut Pasteur & Universite Pierre Et Marie Curie v. Focarino*, 738 F.3d 1337, 1347–48 (Fed. Cir. 2013)).

Petitioner counters that Petitioner had already fully designed the cooling scheme for its allegedly copied OHF products by the time of Petitioner's teardown and analysis of [redacted] products. Reply 20 (citing Ex. 1038, 612:11–13, 613:14–25, 614:1–18; Ex. 2040; Ex. 2042, 65 (showing photographs and test results of Petitioner's 85- inch product within the tear down comparison slide deck document). Petitioner also argues that Patent Owner has not identified any features of [redacted] products that Petitioner allegedly copied. *Id.* (citing *Iron Grip Barbell Co., Inc. v. USA Sports, Inc.*, 392 F.3d 1317, 1325 (Fed. Cir. 2004)). Petitioner notes that "comparative product analysis is a common industry practice." Reply 21 (citing Ex, 1038, 611:6–22; Ex. 1035, 292 n. 117; Ex. 1039, 159:10–24).

We agree with Petitioner that the evidence of record includes a comparison chart between Petitioner's products and [redacted] products—and in particular their large-size products (85-inch of Petitioner and 86-inch of [redacted])—which suggests that allegedly copied OHF products were already designed at the time of Petitioner's competitive teardown and analysis of [redacted] products. *See* Ex. 2042, 65; *cf.* Ex. 1038, 613:14–25 (Mr. Lee testifying that the same comparison chart indicates that the large-format Petitioner 85-inch product has been completed due to its inclusion in this chart). Thus, the evidence of record does not support that Samsung copied the torn-down products when making its OHF products.

Also, Petitioner's engineer, Mr. Sungsu Lee, has testified that the March 24, 2016, date on the slide deck that is Exhibit 2042 is incorrect,

because "[t]here is a label that is attached to the product which would show the product date. And the date is – comes later than the [March 24, 2016] date that is indicated on this [date page]." Ex. 1038, 611:23–612:5. The date shown on the product label referred to by Mr. Sungsu Lee reads "MFG Oct 2016." Ex. 2042, 34, 69. Petitioner asserts that it sold 85- inch OHF product in 2016. Reply 20 (citing Ex. 2040). That assertion is not disputed by Patent Owner. It is unrealistic that Petitioner obtained a product manufactured in October 2016 to do a tear down analysis and then copied the design to make its own product in time to make sales of the copied product in 2016.

Further, even if we were to assume that Petitioner had access to [redacted] products prior to making its own products, the record does not include evidence or analysis from Patent Owner showing any feature of [redacted] products that Petitioner allegedly duplicated. Nor has Patent Owner put forth evidence of substantial similarity between Petitioner's products and [redacted] products. *See Medtronic, Inc. v. Teleflex Innovations S.a.r.l.*, 70 F.4th 1331, 1340 (Fed. Cir. 2023) ("Evidence of access and substantial similarity *is* evidence of copying."). "Copying requires *duplication of features of the patentee's work* based on access to that work, lest all infringement be mistakenly treated as copying." *Institut Pasteur*, 738 F.3d at 1347–48 (emphasis added).

In its Sur-reply, Patent Owner points to the fact that Petitioner's products used a heat exchanger as evidence of copying. Sur-reply 21. But that assertion is too general. Patent Owner has not shown that the heat exchanger in Petitioner's products is of the same type as that in [redacted] products, i.e., comprising enclosed channels or tubes, which are the

only type of heat exchangers specifically described in the specification of the '740 patent.

At best, Patent Owner has put forth assertions and evidence of infringement, which are insufficient to show duplication. *See* PO Resp. 58 ("Samsung's 75- and 85-inch OHF and subsequent products practice claims 1, 5, and 6 of the '740 Patent.") (citing Ex. 2039), 61 ("Thereafter, Samsung released these new versions of its outdoor displays, the OHF series. The OHF series infringes the challenged claims.").

For these reasons, we accord Patent Owner's evidence of copying little weight.

4. Alleged Industry Praise

As evidence of industry praise for the '740 patent, Patent Owner cites an email from Samsung employee Romulus Stoian to Mr. Dunn, a co-inventor of the '740 patent, in which Mr. Stoian called what Mr. Dunn had done at MRI "impressive and unique." PO Resp. 65 (citing Ex. 2001). Patent Owner also cites Mr. Stoian's statement that MRI had entered "a virgin space." *Id.* Patent Owner further cites testimony in the ITC from John Palmer, "a Samsung customer and integrator of the Samsung OH displays for end users," who "testified that Samsung's products were requested by customers (and believed by Palmer to be superior) because of their built-in cooling systems." *Id.* at 67 (citing Ex. 2032, 118:6–119:8).

Petitioner calls Mr. Stoain's email "generic" and argues that it "does not identify any specific technical feature of [Patent Owner]'s products, let alone a specific product that embodies, and is coextensive with, the elements of the Challenged Claims." Reply 23. Petitioner also argues that Patent Owner mischaracterizes John Palmer's testimony to the extent it does not

indicate whether patented features are responsible for the success of the cooling system. *Id.*

We agree with Petitioner that Patent Owner has not established a nexus between its proffered evidence of industry praise and the challenged claims. For example, while Mr. Stoian's email is certainly laudatory of Mr. Dunn and Patent Owner, the passages cited by Patent Owner are tied to Patent Owner's "*new business model* based on turnkey solutions for DOOH [Digital Out-Of-Home displays]." Ex. 2001 (emphasis added). Further, the email does not mention any features of the challenged claims. *See id.* And nothing in the record ties Mr. Stoian's (and by extension, Petitioner's) laudatory statements to the challenged claims. Similarly, Mr. Palmer praised Petitioner's displays, and he insinuated that Petitioner's displays function well in hot and cold conditions, but none of his ITC testimony is tied to any particular feature of the challenged claims. *See* Ex. 2032, 118:6–119:8. In the absence of any nexus evidence tying the asserted industry praise to the challenged claims, we accord Patent Owner's proffered evidence of praise little to no weight.

5. Licensing

Patent Owner argues that third parties have "recognized [Patent Owner]'s innovations by licensing the '740 Patent and paying royalties for use of the claimed inventions." PO Resp. 66. In particular, Patent Owner cites licensing and joint venture agreements between Patent Owner and "[Petitioner]'s primary competitor LG." *Id.* (citing Exs. 2049, 2050). Patent Owner also cites other licenses with Megatech and [redacted] *Id.* (citing Exs. 2051, 2052).

Petitioner argues that Patent Owner does not attempt to establish a nexus between the licensing activity and the '740 patent. Reply 24. According to Petitioner, Patent Owner's licenses or list numerous other intellectual property rights *Id.* (citing Exs. 2049, 2051, 2052; *Shoes by Firebug LLC v. Stride Rite Children's Grp., LLC*, 962 F.3d 1362, 1372–73 (Fed. Cir. 2020)).

Of the agreements cited by Patent Owner, the *See* Ex. 2052, 1–3. The Megatech license .[19] *See* Ex. 2051, 10. Patent Owner's license and joint venture agreements with LG appears to be *See, e.g.*, Ex. 2049, 1–2 Because the agreements encompass intellectual property rights beyond the '740 patent, the agreements on their face do not establish a nexus to the challenged claims. *See Shoes by Firebug*, 962 F.3d at 1372.

[19] Patent Owner acknowledges that a later Provisional Application, i.e., Provisional Application No. 61/138,736, is the first application in the priority chain of the '740 patent "to disclose and teach the integration of a heat exchanger." PO Resp. 11.

For the foregoing reasons, we accord Patent Owner's evidence of licensing little or no weight.

6. Alleged Commercial Success

Patent Owner relies on increased sales of its own products and asserts:

> MRI's own sales increased in mid- to late-2008—shortly after the claimed priority date of the '740 Patent—confirming the commercial success is tied to the novel aspects of the '740 Patent. Ex. 2044. MRI's commercial success has continued to the present, with sales of its large-format products alone totaling over [redacted] between 2018 and 2022. Exs. 2045, 2046. Federal Circuit precedent holds sales of this magnitude alone show commercial success. *See e.g., J.T. Eaton & Co. v. Atlantic Paste & Glue Co.*, 106 F.3d 1563, 1566, 1572, (Fed. Cir. 1997) (affirming a finding that "sales evidence . . . shows [strong commercial] success," where the "sales evidence" consisted solely of the patentee's "$17 million of sales from 1979 through 1984, and its $4 million of annual sales from 1985 through 1989.")

PO Resp. 61–62.

Patent Owner asserts that its 75-inch and 86-inch products "practice" the '740 Patent. PO Resp. 60. We understand Patent Owner to be relying on a presumption of nexus, which "applies for objective indicia when the patentee shows that the asserted objective evidence is tied to a specific product and that product 'embodies the claimed features, and is coextensive with them.'" *Polaris Indus., Inc. v. Arctic Cat, Inc.*, 882 F.3d 1056, 1072 (Fed. Cir. 2018) (quoting *Brown & Williamson Tobacco Corp. v. Philip Morris Inc.*, 229 F.3d 1120, 1130 (Fed. Cir. 2000)).

Patent Owner provides no analysis other than a claim chart for claim 1 of the '740 patent (Ex. 2054) to support its assertion that MRI's 75- and 86-inch large-format displays "are coextensive with the '740 Patent." *Id.* at 60.

Our reviewing court has rejected such "attempt[s] to reduce the coextensiveness requirement to an inquiry into whether the patent claims broadly cover the product that is the subject of the evidence of secondary considerations." *Fox Factory*, 944 F.3d at 1377.

Patent Owner also relies on sales of Petitioner's products and asserts:

> Samsung also has achieved significant success with its outdoor electronic displays. The integration of the effective cooling system first developed by [redacted]—which was available to Samsung through a tear down of [redacted] technology and disclosures in patents named on the [redacted] on the product Samsung tore down—led to success of the OHF series. All other models of Samsung's outdoor displays also use the same cooling system copied from [redacted] and claimed in the '740 Patent. Ex. 2039. Samsung's market share grew from [redacted] (before entering the outdoor display market) to [redacted] (in 2017 after launch of the Accused Products) to [redacted] (by 2020). Ex. 2041, at 29–30.

PO Resp. 62.

Petitioner notes that the market share information relied on by Patent Owner "includes other Samsung products beyond those that MRI alleges practice and/or are coextensive with the Challenged Claims." Reply 23. Patent Owner does not dispute that clarification by the Petitioner. *See* Sur-reply. On this basis alone, the market share information lacks nexus to the challenged claims.

Patent Owner asserts that Petitioner's 75- and 85-inch OHF products practice claims 1, 5, and 6 of the '740 patent. PO Resp. 58. Yet Patent Owner provides no analysis to support its assertion that "the Large-Format Displays [of Petitioner] both practice and *are coextensive* with the claims of the '740 patent." PO Resp. 58 (emphasis added). Instead, Patent Owner

relies on assertions and evidence that Petitioner's products practice claims 1, 5, and 6 of the '740 patent. *Id*. (citing Ex. 2039).

Petitioner correctly states (Reply 21) that coextensiveness requires more than a showing that the claims cover a product practicing the patents. *See Fox Factory*, 944 F.3d at 1377. Petitioner identifies additional areas where Petitioner's products and Patent Owner's products may not be coextensive with the claimed invention. Reply 21–22. Petitioner explains:

> As the ALJ found, both Samsung's and MRI's products have numerous unclaimed features. Ex. 1035, 296–97. Indeed, Samsung's marketing documents identify a number of "features" and "highlights" such as "Magical Protection Glass," "Slim Design," "IP56" certification, "excellent visibility" with a high contrast ratio, and "Remote Management." *See*, *e.g.*, Exs. 1040, 1041. Likewise, MRI's products identify a number of features unrelated to the Challenged Claims such as "Unsurpassed Image Quality," "Extreme Outdoor Durability," "Intelligent Self-Optimization," and "IoT Empowered Architecture." *See e.g.*, Ex. 1042. These features are important to customers and drive sales. Ex. 1043, 312:4–314:22, 316:16–321:4. Accordingly, these products are not coextensive with the Challenged Claims.

Id. at 22.

In its Sur-reply, Patent Owner responds:

> [A]lmost all of the "features" and "highlights" that Samsung identifies (at 22) are, in fact, features or benefits of MRI's invention discussed in the '740 Patent, including the cover glass with solar reduction layer which Samsung terms "Magic Glass" (Ex. 1001, 5:60–6:9), "slim design" (*id*., 5:8–11), water and dust resistant "IP56" certification (*id*., 5:25–45), and "excellent visibility" (*id*., 5:22–25, 9:27–28). And providing "Extreme Outdoor Durability" by protecting against overheating is a key feature of the invention.

Sur-reply 22. These arguments are unavailing.

Although the specification of the '740 patent does describe "[t]he front display surface 221 may be any transparent material (glass, plastic, or composite) and may optionally comprise several layers for polarizing light, reducing glare or reflections, and protecting the internal display components," the solar reduction layer or layers are not claimed. Ex. 1001, 5:60–64.

Although the specification of the '740 patent does describe "[a]n optional filter may be used to ensure that the air (either in the closed or open loop) stays free of contaminants," and "the heat exchanger (and the optional path behind the image assembly or backlight) is properly sealed so that any contaminants in the ambient gas would not enter sensitive portions of the display," the claims require neither the filter nor the sealing. Ex. 1001, 5:32–40. With respect to providing excellent visibility, that characteristic appears to derive from the display being free from contaminants and, thus, we note again that the claims require neither the filter nor the sealing.

Patent Owner asserts that "even if there were other product features," it is not necessary that the patented invention be solely responsible for the commercial success, in order for this factor to be given weight. Sur-reply 22 (citing *Oren Techs., LLC v. Proppant Express Investments LLC*, No. 2019-1778, 2021 WL 3120819, at *7 (Fed. Cir. July 23, 2021)." Sur-reply 22–23. Here, the unclaimed features are so numerous, with many specifically noted in the specification of the '740 patent, that it is appropriate to accord the evidence of commercial success little to no weight.

Patent Owner further argues in its Sur-reply:

> Finally, regardless of whether there is a presumption, the evidence shows that the success of MRI's and Samsung's products is attributable to the effective cooling systems. Indeed, there was no market for outdoor LCD displays until MRI's patented inventions and a market would not exist but for the inventions. Ex. 2001, 2025. This is shown by the White Paper in which Samsung observed that "[t]he many barriers that limited how digital screens could be used outdoors and in direct sunlight have all come down." Ex. 2025, 2. Earlier adopters failed, but "years of insights and experience" and "engineering advances" made putting screens outdoors "entirely possible." *Id*. Samsung recognized that MRI was the "pioneer" who "entered into a virgin space" and Samsung wanted to form a "collaboration in the outdoor space." Ex. 2001. This is strong evidence that the market for outdoor displays is attributable to MRI's pioneering technology. *Id*. Marketing documents show that thermal management was the leading focus of Samsung's effort to sell to its largest customer. Ex. 2038, 8–27. And Samsung customer John Palmer, who is an integrator for Samsung OH displays for end users, testified that customers requested Samsung displays because of their cooling systems. Ex. 2032, 118:6–119:8. *This evidence ties the commercial success to the claimed inventions.*

Sur-reply 23 (emphasis added). These assertions are too general to be meaningful in directly establishing nexus between the alleged commercial success to the claimed invention. Patent Owner simply assumes that the alleged commercial success is the direct result of the unique characteristics of the claimed invention. But that is what Patent Owner has to prove, where nexus cannot be presumed. *Fox Factory*, 944 F.3d at 1373–74.

Further, we disagree with Patent Owner's statement that its sales increased shortly after the claimed priority date of the '740 patent confirms the commercial success is tied to the novel aspects of

the ’740 patent. PO Resp. 61. The alleged tie is mere speculation not proven by evidence.

Based on all of these considerations, we find that the evidence of record does not support coextensiveness between the challenged claims and any of Petitioner’s or Patent Owner’s commercially successful products. Thus, Patent Owner is not entitled to a presumption of nexus. And because Patent Owner has not otherwise directly shown nexus, we accord Patent Owner’s evidence of commercial success little to no weight.

7. Conclusion on Secondary Considerations

For the foregoing reasons, we accord Patent Owner’s objective evidence of nonobviousness little to no weight.

III. CONCLUSION

We determine that Petitioner has proved by a preponderance of the evidence that claims 1–3, 5–9, 11–13, 15–18, and 20 of the ’740 patent are unpatentable.[20]

[20] Should Patent Owner wish to pursue amendment of the challenged claims in a reissue or reexamination proceeding subsequent to the issuance of this Decision, we draw Patent Owner’s attention to the April 2019 *Notice Regarding Options for Amendments by Patent Owner Through Reissue or Reexamination During a Pending AIA Trial Proceeding*. *See* 84 Fed. Reg. 16,654 (Apr. 22, 2019). If Patent Owner chooses to file a reissue application or a request for reexamination of the challenged patent, we remind Patent Owner of its continuing obligation to notify the Board of any such related matters in updated mandatory notices. *See* 37 C.F.R. § 42.8(a)(3), (b)(2).

In summary:

Claims	35 U.S.C. §	References/Basis	Claims Shown Unpatentable	Claims Not shown Unpatentable
1–3, 5–9, 11–13, 15–18, 20	103	Karppanen	1–3, 5–9, 11–13, 15–18, 20	
1–3, 5, 6, 8, 9, 11–13, 15–18, 20	103	Yare		1–3, 5, 6, 8, 9, 11–13, 15–18, 20
Overall Outcome			1–3, 5–9, 11–13, 15–18, 20	

IV. ORDER

In consideration of the foregoing, it is hereby:

ORDERED that claims 1–3, 5–9, 11–13, 15–18, and 20 of the ’740 patent are unpatentable; and

FURTHER ORDERED that, because this is a Final Written Decision, parties to the proceeding seeking judicial review of the decision must comply with the notice and service requirements of 37 C.F.R. § 90.2.

FOR PETITIONER:

Sanjeet Dutta
Douglas J. Kline
Naomi Birbach
Goodwin Proctor LLP
sdutta@goodwinlaw.com
dkline@goodwinlaw.com
nbirbach@goodwinlaw.com

FOR PATENT OWNER:

John C. Alemanni
Carl Sanders
Michael T. Morlock
Courtney Dabbiere
David A. Reed
Andrea A. Anderson
jalemanni@kilpatricktownsend.com
csanders@kilpatricktownsend.com
mmorlock@kilpatricktownsend.com
cdabbiere@kilpatricktownsend.com
dreed@kilpatricktownsend.com
andie.anderson@ktslaw.com