Doc Code: PA..
Document Description: Power of Attorney

PTO/AIA/82A (07-13)
Approved for use through 11/30/2014. OMB 0651-0051
U.S. Patent and Trademark Office; U.S. DEPARTMENT OF COMMERCE
Under the Paperwork Reduction Act of 1995, no persons are required to respond to a collection of information unless it displays a valid OMB control number.

TRANSMITTAL FOR POWER OF ATTORNEY TO ONE OR MORE REGISTERED PRACTITIONERS

NOTE: This form is to be submitted with the Power of Attorney by Applicant form (PTO/AIA/82B) to identify the application to which the Power of Attorney is directed, in accordance with 37 CFR 1.5, unless the application number and filing date are identified in the Power of Attorney by Applicant form. If neither form PTO/AIA/82A nor form PTO/AIA82B identifies the application to which the Power of Attorney is directed, the Power of Attorney will not be recognized in the application.

Application Number	
Filing Date	October 7, 2014
First Named Inventor	Dunn
Title	System for Using Constricted Convection with Closed Loop Cooling System As the Convection Plate
Art Unit	
Examiner Name	
Attorney Docket Number	MAN2241-010J

SIGNATURE of Applicant or Patent Practitioner

Signature	/Tyler Dunham/	Date (Optional)	October 7, 2014
Name	Tyler Dunham	Registration Number	60364
Title (if Applicant is a juristic entity)			
Applicant Name (if Applicant is a juristic entity)			

NOTE: This form must be signed in accordance with 37 CFR 1.33. See 37 CFR 1.4(d) for signature requirements and certifications. If more than one applicant, use multiple forms.

☐ *Total of _____ forms are submitted.

This collection of information is required by 37 CFR 1.131, 1.32, and 1.33. The information is required to obtain or retain a benefit by the public which is to file (and by the USPTO to process) an application. Confidentiality is governed by 35 U.S.C. 122 and 37 CFR 1.11 and 1.14. This collection is estimated to take 3 minutes to complete, including gathering, preparing, and submitting the completed application form to the USPTO. Time will vary depending upon the individual case. Any comments on the amount of time you require to complete this form and/or suggestions for reducing this burden, should be sent to the Chief Information Officer, U.S. Patent and Trademark Office, U.S. Department of Commerce, P.O. Box 1450, Alexandria, VA 22313-1450. DO NOT SEND FEES OR COMPLETED FORMS TO THIS ADDRESS. **SEND TO: Commissioner for Patents, P.O. Box 1450, Alexandria, VA 22313-1450.**

If you need assistance in completing the form, call 1-800-PTO-9199 and select option 2.

Modified PTO/AIA/82B
SLG version 09/2012

GENERAL POWER OF ATTORNEY BY APPLICANT FOR UNITED STATES PATENT

I hereby revoke all previous powers of attorney given in the application identified in the attached transmittal letter (form PTO/AIA/82A or equivalent).

I hereby appoint the practitioners associated with the following Customer Number for Standley Law Group LLP:

08698

as my/our attorneys or agents, and to transact all business in the United States Patent and Trademark Office connected therewith for the application referenced in the attached transmittal letter (for PTO/AIA/82A or equivalent).

Please recognize or change the correspondence address for the application identified in the attached transmittal letter to the address associated with the above-mentioned Customer Number.

I am the Applicant:

- [ ] Inventor or Joint Inventor
- [ ] Legal Representative of a Deceased or Legally Incapacitated Inventor
- [X] Assignee or Person to Whom the Inventor is Under an Obligation to Assign
- [ ] Person Who Otherwise Shows Sufficient Proprietary Interest (e.g., a petition under 37 CFR 1.46(b)(2) was granted in the application or is concurrently being filed with this document)

SIGNATURE of Applicant for Patent

Signature		Date	11/16/2012
Name	William Dunn		
Title	President		
Company	Manufacturing Resources International, Inc.		

Note: Signature - this form must be signed by the applicant in accordance with 37 CFR 1.33. See 37 CFR 1.4 for signature requirements and certifications. Submit multiple forms for more than one signature, see below*.

*Total of 1 forms are submitted.

System for Using Constricted Convection with Closed Loop Cooling System As the Convection Plate

Inventor: William Dunn

Cross-Reference to Related Applications

[0001] This application is a continuation of U.S. Application No. 13/937,777 filed on July 9, 2013, now U.S. Patent 8,854 572 issued October 7, 2014. U.S. Application No. 13/937,777 is a continuation of U.S. Application No. 13/605,530 filed on September 6, 2012. U.S. Application No. 13/605,530 is a continuation of U.S. Application No. 12/620,330 filed on November 17, 2009, now U.S. Patent 8,274,622 issued September 25, 2012, which is a non-provisional application of U.S. Application No. 61/115,333 filed November 17, 2008. U.S. Application No. 12/620,330 is also continuation-in-part of U.S. Application No. 12/411,925 filed March 26, 2009, now U.S. Patent 8,854,595 issued October 7, 2014, which is a non-provisional application of U.S. Provisional Application No. 61/039,454 filed March 26, 2008. U.S. Application No. 12/620,330 is also a continuation-in-part of U.S. Application No. 12/556,029 filed September 9, 2009, which is a non-provisional application of U.S. Provisional Application No. 61/095,615 filed September 9, 2008. U.S. Application No. 12/620,330 is also a continuation-in-part of U.S. Application No. 12/234,307 filed September 19, 2008, now U.S. Patent 8,767,165 issued July 1, 2014, which is a non-provisional application of U.S. Provisional Application No. 61/033,064 filed March 3, 2008. U.S. Application No. 12/620,330 is also a continuation-in-part of U.S. Application No. 12/234,360 filed September 19, 2008, which is a non-provisional application of U.S. Provisional Application No. 61/053,713 filed May 16, 2008. U.S. Application No. 12/620,330 is also a continuation-in-part of

SEC et al. v. MRI
SEC Exhibit 1020.0003
IPR2023-00255

U.S. Application No. 12/237,365 filed September 24, 2008, which is a non-provisional application of U.S. Provisional Application No. 61/057,599 filed May 30, 2008. U.S. Application No. 12/620,330 is also a continuation-in-part of U.S. Application No. 12/235,200 filed September 22, 2008, which is a non-provisional application of U.S. Provisional Application No. 61/076,126 filed June 26, 2008. All aforementioned applications are hereby incorporated by reference in their entirety as if fully cited herein.

Technical Field

[0002] Exemplary embodiments generally relate to cooling systems for electronic displays.

Background of the Art

[0003] Conductive and convective heat transfer systems for electronic displays are known. These systems of the past generally attempt to remove heat from the electronic components in a display through as many sidewalls of the display as possible. While such heat transfer systems have enjoyed a measure of success in the past, improvements to displays require even greater cooling capabilities.

[0004] In particular, cooling devices for electronic displays of the past have generally used convective heat dissipation systems that function to cool an entire interior of the display by one or more fans and fins, for example. By itself, this is not adequate in many climates, especially when radiative heat transfer from the sun through a display window becomes a major factor. In many applications and locations 200 Watts or more of power through such a display window is common. Additionally, modern applications

SEC et al. v. MRI
SEC Exhibit 1020.0004
IPR2023-00255

call for larger displays than previous applications. For example, some outdoor applications call for forty-seven inch screens and above. With increased heat production from the larger screens and radiative heat transfer from the sun through the display window, more efficient and powerful heat dissipation systems are required.

Summary of the Exemplary Embodiments

[0005] A large fluctuation in temperature is common in the devices of the past. Such temperature fluctuation adversely affects the electronic components in these devices. Whereas the systems of the past attempted to remove heat only through the non-display sides and rear components of the enclosure surrounding the electronic display components, a preferred embodiment causes convective heat transfer from the face of the display as well. By the aspects described below, exemplary embodiments have made consistent cooling possible for electronic displays having screens of sizes greater than or equal to twelve inches. For example, cooling of a 55 inch screen can be achieved, even in extremely hot climates. Greater cooling capabilities are provided by the device and method described and shown in more detail below.

[0006] An exemplary embodiment relates to an isolated gas cooling system and a method for cooling an electronic display. An exemplary embodiment includes an isolated gas cooling chamber. The gas cooling chamber is preferably a closed loop which includes a first gas chamber comprising a transparent anterior plate and a second gas chamber comprising a cooling plenum.

[0007] The first gas chamber is anterior to and coextensive with the viewable face of the electronic display surface. The transparent anterior plate may be set forward of the

SEC et al. v. MRI
SEC Exhibit 1020.0005
IPR2023-00255

electronic display surface by spacers defining the depth of the first gas chamber. A cooling chamber fan, or equivalent means, maybe located within the cooling plenum. The fan may be used to propel gas around the isolated gas cooling chamber loop. As the gas traverses the first gas chamber it contacts the electronic display surface, absorbing heat from the surface of the display. Because the gas and the relevant surfaces of the first gas chamber are transparent, the image quality would preferably remain excellent. After the gas has traversed the transparent first gas chamber, the gas may be directed into the rear cooling plenum.

[0008] In order to cool the gas in the plenum, external convective or conductive means may be employed. In at least one embodiment, an external fan unit may also be included within the housing of the display. The external fan unit may be positioned to provide a flow of ingested air over the external surfaces of the plenum. The heated air in the housing may exit the housing as exhaust.

[0009] The two chambers of the closed loop plenum encircle the electronic display. Within electronic displays is typically a backlight, especially in liquid crystal displays (LCD). The backlight can be a significant source of heat for the electronic display. Exemplary embodiments position the backlight sufficiently close to the wall of the cooling plenum so that convective heat transfer from the backlight can be increased. The external fan may force air between the plenum and the backlight or air may be pulled from the top of the display using an additional fan unit. Alternatively, a combination of both fans may be employed.

SEC et al. v. MRI
SEC Exhibit 1020.0006
IPR2023-00255

[0010] The foregoing and other features and advantages of the present invention will be apparent from the following more detailed description of the particular embodiments of the invention, as illustrated in the accompanying drawings.

Brief Description of the Drawings

[0011] A better understanding of an exemplary embodiment will be obtained from a reading of the following detailed description and the accompanying drawings wherein identical reference characters refer to identical parts and in which:

[0012] **FIGURE 1** is an exploded perspective view of an exemplary embodiment showing components of the isolated gas cooling system.

[0013] **FIGURE 2** is top sectional view of an exemplary embodiment of the cooling chamber.

[0014] **FIGURES 3A-3E** are cross sectional views of exemplary embodiments using constricted convection cooling.

Detailed Description

[0015] FIGURE 1 is an exploded view of an exemplary embodiment of the closed loop cooling system. This system is fully described in co-pending U.S. application Nos. 61/033064 and 61/053713 herein incorporated by reference in their entirety.

[0016] It is to be understood that the disclosed embodiments includes the cooling of displays including, but not limited to LCDs. By way of example and not by way of limitation, the exemplary embodiments may be used in conjunction with displays selected from among LCD (including TFT or STN type), light emitting diode (LED),

SEC et al. v. MRI
SEC Exhibit 1020.0007
IPR2023-00255

organic light emitting diode (OLED), field emitting display (FED), cathode ray tube (CRT), and plasma displays. Furthermore, embodiments may be used with displays of other types including those not yet discovered. In particular, it is contemplated that the exemplary embodiments may be well suited for use with full color, flat panel OLED displays. While the embodiments described herein are well suited for outdoor environments, they may also be appropriate for indoor applications (e.g., factory environments) where thermal stability of the display may be at risk.

[0017] An exemplary embodiment 10 of the electronic display and gas cooling system includes an isolated gas cooling chamber 20 contained within an electronic display housing 70. A narrow transparent first gas chamber may be defined by spacers 100 and transparent front plate 90. A second transparent front plate 130 may be laminated to front plate 90 to help prevent breakage of transparent plate 90. Cooling chamber 20 surrounds an electronic display 80 (in this case an LCD stack) and associated backlight panel 140 (although some embodiments may not require a backlight panel).

[0018] The gas cooling system 10 may include means for cooling gas contained within the cooling plenum 45. This means may include a fan 60 which may be positioned at the base of the display housing 70. The fan will force the cooler ingested air over at least one external surface of a posterior cooling plenum 45. If desired, an air conditioner (not shown) may also be utilized to cool the air which contacts the external surface of plenum 45. This air may be the same air that is forced between the backlight 145 and the surface of the plenum 45 in order to further cool the backlight 145.

[0019] Referring to FIGURE 2, in at least one embodiment the isolated gas cooling chamber 20 comprises a closed loop which includes a first gas chamber 30 and a rear

SEC et al. v. MRI
SEC Exhibit 1020.0008
IPR2023-00255

cooling chamber 40. The first gas chamber includes a transparent plate 90. The second gas chamber comprises a cooling plenum 45. The term “isolated gas” refers to the fact that the gas within the isolated gas cooling chamber 20 is essentially isolated from external air in the housing of the display. Because the first gas chamber 30 is positioned in front of the display image, the gas should be substantially free of dust or other contaminates that might negatively affect the display image.

[0020] The isolated gas may be almost any transparent gas, for example, normal air, nitrogen, helium, or any other transparent gas. The gas is preferably colorless so as not to affect the image quality. Furthermore, the isolated gas cooling chamber need not necessarily be hermetically sealed from the external air. It is sufficient that the gas in the chamber is isolated to the extent that dust and contaminates may not substantially enter the first gas chamber.

[0021] The first gas chamber 30 is in gaseous communication with the rear cooling chamber 40. A cooling chamber fan 50 may be provided within the posterior plenum 45. The cooling fan 50 may be utilized to propel gas around the isolated gas cooling chamber 20. The first gas chamber 30 includes at least one transparent plate 90 mounted in front of an electronic display surface 85. The transparent plate 90 may be set forward from the electronic display surface 85 by spacers 100. The spacing members 100 define the depth of the narrow channel passing in front of the electronic display surface 85. The spacing members 100 may be independent or alternatively may be integral with some other component of the device (e.g., integral with the front plate). The electronic display surface 85, the spacing members, and the transparent

SEC et al. v. MRI
SEC Exhibit 1020.0009
IPR2023-00255

front plate 90 define a narrow first gas chamber 30. The chamber 30 is in gaseous communication with plenum 45 through entrance opening 110 and exit opening 120.

[0022] FIGURE 3A shows a cross-sectional view of the section that is shown in Figure 2. Towards the front of the display is the first gas chamber 30 which abuts against the electronic display 80. In front of the first gas chamber 30 is the transparent plate 90. Towards the rear of the display, the backlight 140 is placed in close proximity to the posterior rear cooling chamber 40. The close proximity of these two elements, in part, creates the constricted convection cooling of the backlight 140. One or more constricted convection fans 200 may be used to draw air between the backlight 140 and the rear cooling chamber 40. It has been found that forcing air through a smaller space increases the cooling abilities of the system. The distance between the backlight 140 and the rear cooling chamber 40 may vary depending on many factors, including but not limited to: the size of the display, the design of the backlight assembly, the desired operating environment, and the size and speed of the selected constricted convection fans. An ideal distance may be between 0.25 and 1.25 inches. Alternatively, an ideal distance may be between 0.33 and 2.5 inches. Larger distances may be preferable, depending at least upon the many factors listed above.

[0023] The backlight may comprise a printed circuit board (PCB) with a plurality of lights mounted to the side facing the electronic display 80. The lights in the backlight may be any one of the following: LED's, organic light emitting diodes (OLED), field emitting display (FED), light emitting polymer (LEP), or organic electro-luminescence (OEL) lights. In an exemplary embodiment, the backlight 140 would ideally have a low level of thermal resistance between the side facing the electronic display 80 and the

SEC et al. v. MRI
SEC Exhibit 1020.0010
IPR2023-00255

side facing the cooling plenum. To accomplish this low level of thermal resistance, the backlight 140 may be built using metal printed circuit board (PCB) technology to further transfer heat away from the lights. The rear surface of the backlight 140 may also be metallic, or some other thermally conductive material, to further enhance the convective heat transferring properties. The surface may even have a plurality of surface features such as fins to further enhance the convective heat transferring properties. The constricted convection fan 200 may then send the warm air out of an exhaust 179 (shown in Figure 1) so that it may exit the display housing entirely.

[0024] FIGURE 3B shows another cross-sectional view of another embodiment for the constricted convection setup. In this embodiment, the constricted convection fan 200 is used to push air between the backlight 140 and the rear cooling chamber 40. FIGURE 3C shows an embodiment without the constricted convection fan, but instead uses the fan 60 which draws air from outside the display housing. As noted above, this air may simply be ambient air or alternatively this air may come from a conditioning unit (not shown). To facilitate the flow of air between the backlight 140 and the rear cooling chamber 40, a guiding device 210 may be used.

[0025] FIGURE 3D shows another embodiment, where the rear cooling chamber 40 contains a guiding feature 41, which is used in combination with the guiding device 210 to facilitate the flow of air between the backlight and the cooling chamber. FIGURE 3E shows another embodiment, where both the fan 60 and the constricted convection fan 200 is used. This embodiment could also utilize a version of the guiding devices shown in Figures 3C and 3D.

SEC et al. v. MRI
SEC Exhibit 1020.0011
IPR2023-00255

[0026] While the display is operational, the fan 60 and the constricted convection fan 200 may run continuously. However, if desired, a temperature sensor (not shown) and a switch or microcontroller (not shown) may be incorporated within the electronic display. This effective thermostat may be used to detect when temperatures have reached a predetermined threshold value. In such a case, the various fans may be selectively engaged when the temperature in the display reaches a predetermined value. Predetermined thresholds may be selected and the system may be configured with a thermostat (not shown) to advantageously keep the display within an acceptable temperature range. This would save on both energy costs as well as the useful lifetime of the devices.

[0027] An optional air filter (not shown) may be employed within the plenum to assist in preventing contaminates and dust from entering the first gas chamber 30. An air filter could also be used to prevent fan 60 from drawing in particulates from either the surrounding environment or the conditioning unit.

[0028] It should be noted, that some embodiments may not use display technology that requires a backlight. For these types of displays, the electronic display 80 would be placed anterior to the rear cooling chamber 40 (rather than the backlight 140). For example, an OLED may be placed anterior to the rear cooling chamber 40 so that cooling air could be forced between the posterior surface of the OLED and the rear cooling chamber 40.

[0029] Having shown and described the preferred embodiments, those skilled in the art will realize that many variations and modifications may be made to affect the embodiments and still be within the scope of the claimed invention. Additionally, many

SEC et al. v. MRI
SEC Exhibit 1020.0012
IPR2023-00255

of the elements indicated above may be altered or replaced by different elements which will provide the same result and fall within the spirit of the claimed invention. It is the intention, therefore, to limit the invention only as indicated by the scope of the claims.

SEC et al. v. MRI
SEC Exhibit 1020.0013
IPR2023-00255

CLAIMS

I claim:

1. A gas cooling system for an electronic display having a display surface and a rear surface, the system comprising:

a closed loop of circulating gas positioned to surround the electronic display; and

an open loop of cooling air travelling along the rear surface of the electronic display without mixing with the circulating gas.

2. The system of claim 1 further comprising:

a means for transferring heat from the circulating gas to the cooling air.

3. The system of claim 1, further comprising:

a transparent anterior plate positioned in front of the display surface to define a gap;

a fan positioned to force the circulating gas through said gap.

4. The system of claim 3, further comprising:

a second transparent anterior plate bonded to the first transparent anterior plate.

5. The system of claim 1 further comprising:

a metallic layer bonded to the rear surface of the electronic display.

6. The system of claim 1, further comprising:

a fan positioned to force cooling air along the rear surface of the electronic display.

7. The system of claim 1, further comprising:

a temperature sensing device within said closed loop of circulating gas;

a fan positioned to force circulating gas through the closed loop;

SEC et al. v. MRI
SEC Exhibit 1020.0014
IPR2023-00255

a switch in communication with said temperature sensing device and said fan; and

wherein the fan is switched on when the temperature within the closed loop of circulating gas reaches a threshold value.

8. The system of claim 1 wherein:

the flow of open loop cooling air is perpendicular to the flow of circulating gas in the closed loop.

9. The system of claim 1 wherein:

the open loop cooling air flows through the center of the closed loop of circulating gas.

10. The system of claim 2, wherein:

the means for transferring heat from the circulating gas to the cooling air comprises placing the circulating gas within a plenum and allowing cooling air to contact exterior surfaces of the plenum.

11. The system of claim 1 wherein:

the rear surface of the electronic display is the rear surface of an LED backlight.

12. A thermally regulated electronic display comprising:

a housing having an entrance and an exhaust;

a liquid crystal stack having a display surface;

an LED backlight with a thermally conductive rear surface positioned posterior to the liquid crystal stack;

a closed loop of circulating gas positioned to surround the liquid crystal stack and LED backlight; and

an open loop of cooling air travelling through the entrance, along the rear surface of the LED backlight, and exhausting out of the display.

13. The electronic display of claim 12 wherein:

the flow of open loop cooling air is perpendicular to the flow of circulating gas in the closed loop.

14. The electronic display of claim 12 wherein:

the open loop cooling air flows through the closed loop of circulating gas.

15. The electronic display of claim 12 further comprising:

a means for transferring heat from the circulating gas to the cooling air.

16. The electronic display of claim 15 wherein:

the means for transferring heat from the circulating gas to the cooling air comprises placing the circulating gas within a plenum and allowing cooling air to contact exterior surfaces of the plenum.

17. A thermally regulated liquid crystal display assembly, the system comprising:

a liquid crystal stack having a display surface;

an LED backlight with a thermally conductive rear surface positioned posterior to the liquid crystal stack;

a glass plate placed in front of the display surface, the space between the glass plate and display surface defining a channel;

a closed loop of circulating gas positioned to surround the liquid crystal stack and LED backlight where circulating gas flows through the channel; and

an open loop of cooling air travelling along the rear surface of the LED backlight where the cooling air is not permitted to mix with the circulating gas.

18. The electronic display of claim 17 wherein:

the flow of open loop cooling air is perpendicular to the flow of circulating gas in the closed loop.

19. The electronic display of claim 17 further comprising:

a plenum having interior and exterior surfaces where the circulating gas contacts the interior surfaces and the cooling air contacts the exterior surfaces.

SEC et al. v. MRI
SEC Exhibit 1020.0017
IPR2023-00255

ABSTRACT

A gas cooling system for an electronic display is disclosed herein. A closed loop of circulating gas is preferably positioned to surround the electronic display. An open loop of cooling air preferably travels along the rear surface of the electronic display. In an exemplary embodiment the cooling air does not mix with the circulating gas. Heat may be transferred from the circulating gas to the cooling air in order to cool the display.

SEC et al. v. MRI
SEC Exhibit 1020.0018
IPR2023-00255

Electronic Patent Application Fee Transmittal

Application Number:	
Filing Date:	
Title of Invention:	System for Using Constricted Convection with Closed Loop Cooling System As the Convection Plate
First Named Inventor/Applicant Name:	William Dunn
Filer:	Tyler Steven Dunham/Kimberly Hefner
Attorney Docket Number:	MAN2241-010J

Filed as Large Entity

Utility under 35 USC 111(a) Filing Fees

Description	Fee Code	Quantity	Amount	Sub-Total in USD($)
Basic Filing:				
Utility application filing	1011	1	280	280
Utility Search Fee	1111	1	600	600
Utility Examination Fee	1311	1	720	720
Pages:				
Claims:				
Miscellaneous-Filing:				
Petition:				
Patent-Appeals-and-Interference:				

Description	Fee Code	Quantity	Amount	Sub-Total in USD($)
Post-Allowance-and-Post-Issuance:				
Extension-of-Time:				
Miscellaneous:				
		Total in USD ($)		**1600**

Electronic Acknowledgement Receipt

EFS ID:	20354028
Application Number:	14508767
International Application Number:	
Confirmation Number:	5280
Title of Invention:	System for Using Constricted Convection with Closed Loop Cooling System As the Convection Plate
First Named Inventor/Applicant Name:	William Dunn
Customer Number:	8698
Filer:	Tyler Steven Dunham/Kimberly Hefner
Filer Authorized By:	Tyler Steven Dunham
Attorney Docket Number:	MAN2241-010J
Receipt Date:	07-OCT-2014
Filing Date:	
Time Stamp:	17:46:37
Application Type:	Utility under 35 USC 111(a)

Payment information:

Submitted with Payment	yes
Payment Type	Deposit Account
Payment was successfully received in RAM	$1600
RAM confirmation Number	4651
Deposit Account	194076
Authorized User	

File Listing:

Document Number	Document Description	File Name	File Size(Bytes)/ Message Digest	Multi Part /.zip	Pages (if appl.)

1	Oath or Declaration filed	20131205_DecAssign_MAN2241-010l.pdf	176908 9c4cbd0a3a1c8a21ef0f16ab855f36dc7f46c3c6	no	2
Warnings:					
Information:					
2	Application Data Sheet	20141007_ADS_MAN2241-010J.pdf	1562016 e08d7e300f3da7cdb364fda719c20abaf13debd1	no	8
Warnings:					
Information:					
3	Drawings-only black and white line drawings	20141007_Draw_MAN2241-010J.pdf	256446 0caec2536f9e9c62b607b56740fc680a9d13604a	no	3
Warnings:					
Information:					
4	Power of Attorney	20141007_POA_MAN2241-010J.pdf	234103 95764c9c95fc1941163c61eee7c855d8a3d4d2e7	no	2
Warnings:					
Information:					
5		20141007_App_MAN2241-010J.pdf	65388 574cfc5631599195db7dc878aeff3b5fa62a72f2	yes	16
	Multipart Description/PDF files in .zip description				
	Document Description		**Start**	**End**	
	Specification		1	11	
	Claims		12	15	
	Abstract		16	16	
Warnings:					
Information:					
6	Fee Worksheet (SB06)	fee-info.pdf	33005 fac8ce3253f8a4712632f598dbbc1198ed26e87e	no	2
Warnings:					
Information:					
		Total Files Size (in bytes):	2327866		

This Acknowledgement Receipt evidences receipt on the noted date by the USPTO of the indicated documents, characterized by the applicant, and including page counts, where applicable. It serves as evidence of receipt similar to a Post Card, as described in MPEP 503.

New Applications Under 35 U.S.C. 111
If a new application is being filed and the application includes the necessary components for a filing date (see 37 CFR 1.53(b)-(d) and MPEP 506), a Filing Receipt (37 CFR 1.54) will be issued in due course and the date shown on this Acknowledgement Receipt will establish the filing date of the application.

National Stage of an International Application under 35 U.S.C. 371
If a timely submission to enter the national stage of an international application is compliant with the conditions of 35 U.S.C. 371 and other applicable requirements a Form PCT/DO/EO/903 indicating acceptance of the application as a national stage submission under 35 U.S.C. 371 will be issued in addition to the Filing Receipt, in due course.

New International Application Filed with the USPTO as a Receiving Office
If a new international application is being filed and the international application includes the necessary components for an international filing date (see PCT Article 11 and MPEP 1810), a Notification of the International Application Number and of the International Filing Date (Form PCT/RO/105) will be issued in due course, subject to prescriptions concerning national security, and the date shown on this Acknowledgement Receipt will establish the international filing date of the application.

COMBINED ASSIGNMENT AND DECLARATION (37 CFR 1.63) FOR UTILITY OR DESIGN APPLICATION USING AN APPLICATION DATA SHEET (37 CFR 1.76)

Title of Invention	System for Using Constricted Convection with Closed Loop Cooling System As the Convection Plate

DECLARATION

As the below named inventor, I hereby declare that:

This declaration is directed to:

[ ] The attached application, or

[X] United States application or PCT international application number 13/937,777 filed on 09-JUL-2013.

The above-identified application was made or authorized to be made by me.

I believe that I am the original inventor or an original joint inventor of a claimed invention in the application.

I hereby acknowledge that any willful false statement made in this declaration is punishable under 18 U.S.C. 1001 by fine or imprisonment of not more than five (5) years, or both.

ASSIGNMENT

For at least one U.S. dollar ($1.00) and for other good and valuable consideration, the receipt of which is hereby acknowledged, I hereby sell, assign and transfer to Manufacturing Resources International, Inc., a corporation organized under the law of the State of Georgia having an office at 6415 Shiloh Road East, Alpharetta, GA 30005, (hereinafter referred to as the Assignee) my entire right, title and interest, together with all rights of priority, in and to the invention set forth in the above-identified application. I further hereby sell, assign and transfer to the Assignee my entire right, title and interest, together with all rights of priority, in and to my invention as described and/or claimed in any and all applications for patents based on the invention, including divisionals, continuations, renewals, substitutes and reissues thereof, and all rights of priority resulting from any of these patent applications, as well as all foreign counterparts and extensions thereof, together with all patents issuing on any of these applications for the full terms of all of the patents which may be granted on the invention.

I authorize the Assignee to make applications for, to prosecute such applications, and to receive patents for the invention in the United States and any foreign countries, in the Assignee's name.

I promise and agree that I will execute or procure any further necessary assurance of title to the invention and any patents which may issue on the invention. I will, at any time, upon the request and without further consideration, but at the expense of the Assignee, deliver any testimony in any legal proceedings and execute all papers and do all other things that may be necessary or desirable to perfect the title to the invention, or any patents which may be granted therefor, to the Assignee, its successors, assigns, or other legal representatives. I will, at any time, upon the request and at the expense of the Assignee, execute any continuations, divisionals, reissues, or any other additional applications for patents for the invention or any part or parts thereof and any patents issuing thereon are hereby assigned to the Assignee. I will make all rightful oaths, and do all lawful acts required for procuring and enforcing any of the patents, without further compensation, but at the expense of the Assignee, its successors, assigns or other legal representatives.

I authorize and request the Commissioner of Patents and Trademarks to issue any and all Letters Patent of the

United States for the invention, resulting from any of the aforesaid applications to the Assignee.

LEGAL NAME OF INVENTOR

Inventor: William Dunn

Signature: _____ Date: 12-2-13

Note: An application data sheet (PTO/SB/14 or equivalent), including naming the entire inventive entity, must accompany this form or must have been previously filed. Use an additional form for each additional inventor.

Advice from Standley Law Group LLP: It is advisable to obtain two witness signatures to the above inventor signature in the places indicated below, OR in the alternative, it is advisable to obtain a notarization of the above inventor signature in the notary section set forth below. With or without the witness signatures or the notarization, this assignment is a legally binding agreement to assign the invention to the assignee.

Optional (but advisable) witness signatures:

Witness One
Printed Full Legal Name: _____
Signature: _____
Date: _____

Witness Two
Printed Full Legal Name: _____
Signature: _____
Date: _____

Or, optional (but advisable) notarization:

STATE OF Georgia :
COUNTY OF Cobb : SS.

Before me personally appeared William Dunn, to me known to be the same person described in and who executed the foregoing instrument, and acknowledged that he/she executed the same, of his/her own free will and for the purposes set forth. Sworn to before me and subscribed in my presence this 2ND day of December, 2013.

(seal)

Kenneth J Dewhurst
Notary Public

PTO/AIA/14 (12-13)
Approved for use through 01/31/2014. OMB 0651-0032
U.S. Patent and Trademark Office; U.S. DEPARTMENT OF COMMERCE
Under the Paperwork Reduction Act of 1995, no persons are required to respond to a collection of information unless it contains a valid OMB control number.

Application Data Sheet 37 CFR 1.76	Attorney Docket Number	MAN2241-010J
	Application Number	
Title of Invention	System for Using Constricted Convection with Closed Loop Cooling System As the Convection Plate	

The application data sheet is part of the provisional or nonprovisional application for which it is being submitted. The following form contains the bibliographic data arranged in a format specified by the United States Patent and Trademark Office as outlined in 37 CFR 1.76.
This document may be completed electronically and submitted to the Office in electronic format using the Electronic Filing System (EFS) or the document may be printed and included in a paper filed application.

Secrecy Order 37 CFR 5.2

☐ Portions or all of the application associated with this Application Data Sheet may fall under a Secrecy Order pursuant to 37 CFR 5.2 (Paper filers only. Applications that fall under Secrecy Order may not be filed electronically.)

Inventor Information:

Inventor 1 Remove

Legal Name

Prefix	Given Name	Middle Name	Family Name	Suffix
	William		DUNN	

Residence Information (Select One) ◉ US Residency ◯ Non US Residency ◯ Active US Military Service

City	Alpharetta	State/Province	GA	Country of Residence i	US

Mailing Address of Inventor:

Address 1	6415 Shiloh Road East		
Address 2			
City	Alpharetta	State/Province	GA
Postal Code	30005	Country i	US

All Inventors Must Be Listed - Additional Inventor Information blocks may be generated within this form by selecting the **Add** button. Add

Correspondence Information:

Enter either Customer Number or complete the Correspondence Information section below.
For further information see 37 CFR 1.33(a).

☐ **An Address is being provided for the correspondence Information of this application.**

Customer Number	08698		
Email Address	standleydocketing@standleyllp.com	Add Email	Remove Email

Application Information:

Title of the Invention	System for Using Constricted Convection with Closed Loop Cooling System As the Convection Plate		
Attorney Docket Number	MAN2241-010J	Small Entity Status Claimed	☐
Application Type	Nonprovisional		
Subject Matter	Utility		
Total Number of Drawing Sheets (if any)	3	Suggested Figure for Publication (if any)	1

Filing By Reference :

SEC et al. v. MRI
SEC Exhibit 1020.0026
IPR2023-00255

PTO/AIA/14 (12-13)
Approved for use through 01/31/2014. OMB 0651-0032
U.S. Patent and Trademark Office; U.S. DEPARTMENT OF COMMERCE
Under the Paperwork Reduction Act of 1995, no persons are required to respond to a collection of information unless it contains a valid OMB control number.

Application Data Sheet 37 CFR 1.76	Attorney Docket Number	MAN2241-010J
	Application Number	
Title of Invention	System for Using Constricted Convection with Closed Loop Cooling System As the Convection Plate	

Only complete this section when filing an application by reference under 35 U.S.C. 111(c) and 37 CFR 1.57(a). Do not complete this section if application papers including a specification and any drawings are being filed. Any domestic benefit or foreign priority information must be provided in the appropriate section(s) below (i.e., "Domestic Benefit/National Stage Information" and "Foreign Priority Information").

For the purposes of a filing date under 37 CFR 1.53(b), the description and any drawings of the present application are replaced by this reference to the previously filed application, subject to conditions and requirements of 37 CFR 1.57(a).

Application number of the previously filed application	Filing date (YYYY-MM-DD)	Intellectual Property Authority or Country

Publication Information:

☐ Request Early Publication (Fee required at time of Request 37 CFR 1.219)

☐ **Request Not to Publish.** I hereby request that the attached application not be published under 35 U.S.C. 122(b) and certify that the invention disclosed in the attached application **has not and will not** be the subject of an application filed in another country, or under a multilateral international agreement, that requires publication at eighteen months after filing.

Representative Information:

Representative information should be provided for all practitioners having a power of attorney in the application. Providing this information in the Application Data Sheet does not constitute a power of attorney in the application (see 37 CFR 1.32).
Either enter Customer Number or complete the Representative Name section below. If both sections are completed the customer Number will be used for the Representative Information during processing.

Please Select One:	◉ Customer Number	○ US Patent Practitioner	○ Limited Recognition (37 CFR 11.9)
Customer Number	08698		

Domestic Benefit/National Stage Information:

This section allows for the applicant to either claim benefit under 35 U.S.C. 119(e), 120, 121, or 365(c) or indicate National Stage entry from a PCT application. Providing this information in the application data sheet constitutes the specific reference required by 35 U.S.C. 119(e) or 120, and 37 CFR 1.78.
When referring to the current application, please leave the application number blank.

Prior Application Status	Patented			Remove	
Application Number	Continuity Type	Prior Application Number	Filing Date (YYYY-MM-DD)	Patent Number	Issue Date (YYYY-MM-DD)
	Continuation of	13937777	2013-07-09	8854572	2014-10-07
Prior Application Status	Patented			Remove	
Application Number	Continuity Type	Prior Application Number	Filing Date (YYYY-MM-DD)	Patent Number	Issue Date (YYYY-MM-DD)
13937777	Continuation of	13605530	2012-09-06	8482695	2013-07-09

SEC et al. v. MRI
SEC Exhibit 1020.0027
IPR2023-00255

Under the Paperwork Reduction Act of 1995, no persons are required to respond to a collection of information unless it contains a valid OMB control number.

Application Data Sheet 37 CFR 1.76	Attorney Docket Number	MAN2241-010J
	Application Number	
Title of Invention	System for Using Constricted Convection with Closed Loop Cooling System As the Convection Plate	

Prior Application Status	Patented				Remove
Application Number	Continuity Type	Prior Application Number	Filing Date (YYYY-MM-DD)	Patent Number	Issue Date (YYYY-MM-DD)
13605530	Continuation of	12620330	2009-11-17	8274622	2012-09-25
Prior Application Status	Expired				Remove
Application Number	Continuity Type	Prior Application Number	Filing Date (YYYY-MM-DD)		
12620330	Claims benefit of provisional	61115333	2008-11-17		
Prior Application Status	Patented				Remove
Application Number	Continuity Type	Prior Application Number	Filing Date (YYYY-MM-DD)	Patent Number	Issue Date (YYYY-MM-DD)
12620330	Continuation in part of	12234307	2008-09-19	8767165	2014-07-01
Prior Application Status	Expired				Remove
Application Number	Continuity Type	Prior Application Number	Filing Date (YYYY-MM-DD)		
12234307	Claims benefit of provisional	61033064	2008-03-03		
Prior Application Status	Pending				Remove
Application Number	Continuity Type	Prior Application Number	Filing Date (YYYY-MM-DD)		
12620330	Continuation in part of	12234360	2008-09-19		
Prior Application Status	Expired				Remove
Application Number	Continuity Type	Prior Application Number	Filing Date (YYYY-MM-DD)		
12234360	Claims benefit of provisional	61053713	2008-05-16		
Prior Application Status	Pending				Remove
Application Number	Continuity Type	Prior Application Number	Filing Date (YYYY-MM-DD)		
12620330	Claims benefit of provisional	12237365	2008-09-24		
Prior Application Status	Expired				Remove
Application Number	Continuity Type	Prior Application Number	Filing Date (YYYY-MM-DD)		
12237365	Claims benefit of provisional	61057599	2008-05-30		
Prior Application Status	Patented				Remove
Application Number	Continuity Type	Prior Application Number	Filing Date (YYYY-MM-DD)	Patent Number	Issue Date (YYYY-MM-DD)
12620330	Continuation in part of	12411925	2009-03-26	8854595	2014-10-07
Prior Application Status	Expired				Remove
Application Number	Continuity Type	Prior Application Number	Filing Date (YYYY-MM-DD)		
12411925	Claims benefit of provisional	61039454	2008-03-26		
Prior Application Status	Pending				Remove
Application Number	Continuity Type	Prior Application Number	Filing Date (YYYY-MM-DD)		
12620330	Continuation in part of	12235200	2008-09-22		
Prior Application Status	Expired				Remove

SEC et al. v. MRI
SEC Exhibit 1020.0028
IPR2023-00255

Under the Paperwork Reduction Act of 1995, no persons are required to respond to a collection of information unless it contains a valid OMB control number.

Application Data Sheet 37 CFR 1.76	Attorney Docket Number	MAN2241-010J
	Application Number	
Title of Invention	System for Using Constricted Convection with Closed Loop Cooling System As the Convection Plate	

Application Number	Continuity Type	Prior Application Number	Filing Date (YYYY-MM-DD)
12235200	Claims benefit of provisional	61076126	2008-06-26
Prior Application Status	Patented	Remove	

Application Number	Continuity Type	Prior Application Number	Filing Date (YYYY-MM-DD)	Patent Number	Issue Date (YYYY-MM-DD)
12620330	Continuation in part of	12556029	2009-09-09	8373841	2013-02-12
Prior Application Status	Expired	Remove			

Application Number	Continuity Type	Prior Application Number	Filing Date (YYYY-MM-DD)
12556029	Claims benefit of provisional	61095615	2008-09-09

Additional Domestic Benefit/National Stage Data may be generated within this form by selecting the **Add** button. Add

Foreign Priority Information:

This section allows for the applicant to claim priority to a foreign application. Providing this information in the application data sheet constitutes the claim for priority as required by 35 U.S.C. 119(b) and 37 CFR 1.55(d). When priority is claimed to a foreign application that is eligible for retrieval under the priority document exchange program (PDX) [i] the information will be used by the Office to automatically attempt retrieval pursuant to 37 CFR 1.55(h)(1) and (2). Under the PDX program, applicant bears the ultimate responsibility for ensuring that a copy of the foreign application is received by the Office from the participating foreign intellectual property office, or a certified copy of the foreign priority application is filed, within the time period specified in 37 CFR 1.55(g)(1).

Remove

Application Number	Country [i]	Filing Date (YYYY-MM-DD)	Access Code [i] (if applicable)

Additional Foreign Priority Data may be generated within this form by selecting the **Add** button. Add

Statement under 37 CFR 1.55 or 1.78 for AIA (First Inventor to File) Transition Applications

☐ This application (1) claims priority to or the benefit of an application filed before March 16, 2013 and (2) also contains, or contained at any time, a claim to a claimed invention that has an effective filing date on or after March 16, 2013.
NOTE: By providing this statement under 37 CFR 1.55 or 1.78, this application, with a filing date on or after March 16, 2013, will be examined under the first inventor to file provisions of the AIA.

SEC et al. v. MRI
SEC Exhibit 1020.0029
IPR2023-00255

PTO/AIA/14 (12-13)
Approved for use through 01/31/2014. OMB 0651-0032
U.S. Patent and Trademark Office; U.S. DEPARTMENT OF COMMERCE
Under the Paperwork Reduction Act of 1995, no persons are required to respond to a collection of information unless it contains a valid OMB control number.

Application Data Sheet 37 CFR 1.76	Attorney Docket Number	MAN2241-010J
	Application Number	
Title of Invention	System for Using Constricted Convection with Closed Loop Cooling System As the Convection Plate	

Authorization to Permit Access:

☐ Authorization to Permit Access to the Instant Application by the Participating Offices

If checked, the undersigned hereby grants the USPTO authority to provide the European Patent Office (EPO), the Japan Patent Office (JPO), the Korean Intellectual Property Office (KIPO), the World Intellectual Property Office (WIPO), and any other intellectual property offices in which a foreign application claiming priority to the instant patent application is filed access to the instant patent application. See 37 CFR 1.14(c) and (h). This box should not be checked if the applicant does not wish the EPO, JPO, KIPO, WIPO, or other intellectual property office in which a foreign application claiming priority to the instant patent application is filed to have access to the instant patent application.

In accordance with 37 CFR 1.14(h)(3), access will be provided to a copy of the instant patent application with respect to: 1) the instant patent application-as-filed; 2) any foreign application to which the instant patent application claims priority under 35 U.S.C. 119(a)-(d) if a copy of the foreign application that satisfies the certified copy requirement of 37 CFR 1.55 has been filed in the instant patent application; and 3) any U.S. application-as-filed from which benefit is sought in the instant patent application.

In accordance with 37 CFR 1.14(c), access may be provided to information concerning the date of filing this Authorization.

Applicant Information:

Providing assignment information in this section does not substitute for compliance with any requirement of part 3 of Title 37 of CFR to have an assignment recorded by the Office.

Applicant 1 Remove

If the applicant is the inventor (or the remaining joint inventor or inventors under 37 CFR 1.45), this section should not be completed. The information to be provided in this section is the name and address of the legal representative who is the applicant under 37 CFR 1.43; or the name and address of the assignee, person to whom the inventor is under an obligation to assign the invention, or person who otherwise shows sufficient proprietary interest in the matter who is the applicant under 37 CFR 1.46. If the applicant is an applicant under 37 CFR 1.46 (assignee, person to whom the inventor is obligated to assign, or person who otherwise shows sufficient proprietary interest) together with one or more joint inventors, then the joint inventor or inventors who are also the applicant should be identified in this section.

Clear

◉ Assignee	○ Legal Representative under 35 U.S.C. 117	○ Joint Inventor
○ Person to whom the inventor is obligated to assign.	○ Person who shows sufficient proprietary interest	

If applicant is the legal representative, indicate the authority to file the patent application, the inventor is:

Name of the Deceased or Legally Incapacitated Inventor :

If the Applicant is an Organization check here. ☒

Organization Name	Manufacturing Resources International, Inc.

SEC et al. v. MRI
SEC Exhibit 1020.0030
IPR2023-00255

Under the Paperwork Reduction Act of 1995, no persons are required to respond to a collection of information unless it contains a valid OMB control number.

Application Data Sheet 37 CFR 1.76	Attorney Docket Number	MAN2241-010J
	Application Number	
Title of Invention	System for Using Constricted Convection with Closed Loop Cooling System As the Convection Plate	

Mailing Address Information:			
Address 1	6415 Shiloh Road East		
Address 2			
City	Alpharetta	**State/Province**	GA
Country i	US	Postal Code	30005
Phone Number		Fax Number	
Email Address			

Additional Applicant Data may be generated within this form by selecting the Add button. Add

Assignee Information including Non-Applicant Assignee Information:

Providing assignment information in this section does not subsitute for compliance with any requirement of part 3 of Title 37 of CFR to have an assignment recorded by the Office.

Assignee 1

Complete this section if assignee information, including non-applicant assignee information, is desired to be included on the patent application publication . An assignee-applicant identified in the "Applicant Information" section will appear on the patent application publication as an applicant. For an assignee-applicant, complete this section only if identification as an assignee is also desired on the patent application publication.

Remove

If the Assignee or Non-Applicant Assignee is an Organization check here. ☐

Prefix	**Given Name**	Middle Name	**Family Name**	Suffix

Mailing Address Information For Assignee including Non-Applicant Assignee:			
Address 1			
Address 2			
City		**State/Province**	
Country i		Postal Code	
Phone Number		Fax Number	
Email Address			

Additional Assignee or Non-Applicant Assignee Data may be generated within this form by selecting the Add button. Add

SEC et al. v. MRI
SEC Exhibit 1020.0031
IPR2023-00255

Application Data Sheet 37 CFR 1.76	Attorney Docket Number	MAN2241-010J
	Application Number	
Title of Invention	System for Using Constricted Convection with Closed Loop Cooling System As the Convection Plate	

Signature:

Remove

NOTE: This form must be signed in accordance with 37 CFR 1.33. See 37 CFR 1.4 for signature requirements and certifications					
Signature	/Tyler S. Dunham/			Date (YYYY-MM-DD)	2013-07-09
First Name	Tyler	Last Name	Dunham	Registration Number	60364
Additional Signature may be generated within this form by selecting the Add button.					Add

This collection of information is required by 37 CFR 1.76. The information is required to obtain or retain a benefit by the public which is to file (and by the USPTO to process) an application. Confidentiality is governed by 35 U.S.C. 122 and 37 CFR 1.14. This collection is estimated to take 23 minutes to complete, including gathering, preparing, and submitting the completed application data sheet form to the USPTO. Time will vary depending upon the individual case. Any comments on the amount of time you require to complete this form and/or suggestions for reducing this burden, should be sent to the Chief Information Officer, U.S. Patent and Trademark Office, U.S. Department of Commerce, P.O. Box 1450, Alexandria, VA 22313-1450. DO NOT SEND FEES OR COMPLETED FORMS TO THIS ADDRESS. **SEND TO: Commissioner for Patents, P.O. Box 1450, Alexandria, VA 22313-1450.**

SEC et al. v. MRI
SEC Exhibit 1020.0032
IPR2023-00255

Privacy Act Statement

The Privacy Act of 1974 (P.L. 93-579) requires that you be given certain information in connection with your submission of the attached form related to a patent application or patent. Accordingly, pursuant to the requirements of the Act, please be advised that: (1) the general authority for the collection of this information is 35 U.S.C. 2(b)(2); (2) furnishing of the information solicited is voluntary; and (3) the principal purpose for which the information is used by the U.S. Patent and Trademark Office is to process and/or examine your submission related to a patent application or patent. If you do not furnish the requested information, the U.S. Patent and Trademark Office may not be able to process and/or examine your submission, which may result in termination of proceedings or abandonment of the application or expiration of the patent.

The information provided by you in this form will be subject to the following routine uses:

1. The information on this form will be treated confidentially to the extent allowed under the Freedom of Information Act (5 U.S.C. 552) and the Privacy Act (5 U.S.C. 552a). Records from this system of records may be disclosed to the Department of Justice to determine whether the Freedom of Information Act requires disclosure of these records.

2. A record from this system of records may be disclosed, as a routine use, in the course of presenting evidence to a court, magistrate, or administrative tribunal, including disclosures to opposing counsel in the course of settlement negotiations.

3. A record in this system of records may be disclosed, as a routine use, to a Member of Congress submitting a request involving an individual, to whom the record pertains, when the individual has requested assistance from the Member with respect to the subject matter of the record.

4. A record in this system of records may be disclosed, as a routine use, to a contractor of the Agency having need for the information in order to perform a contract. Recipients of information shall be required to comply with the requirements of the Privacy Act of 1974, as amended, pursuant to 5 U.S.C. 552a(m).

5. A record related to an International Application filed under the Patent Cooperation Treaty in this system of records may be disclosed, as a routine use, to the International Bureau of the World Intellectual Property Organization, pursuant to the Patent Cooperation Treaty.

6. A record in this system of records may be disclosed, as a routine use, to another federal agency for purposes of National Security review (35 U.S.C. 181) and for review pursuant to the Atomic Energy Act (42 U.S.C. 218(c)).

7. A record from this system of records may be disclosed, as a routine use, to the Administrator, General Services, or his/her designee, during an inspection of records conducted by GSA as part of that agency's responsibility to recommend improvements in records management practices and programs, under authority of 44 U.S.C. 2904 and 2906. Such disclosure shall be made in accordance with the GSA regulations governing inspection of records for this purpose, and any other relevant (i.e., GSA or Commerce) directive. Such disclosure shall not be used to make determinations about individuals.

8. A record from this system of records may be disclosed, as a routine use, to the public after either publication of the application pursuant to 35 U.S.C. 122(b) or issuance of a patent pursuant to 35 U.S.C. 151. Further, a record may be disclosed, subject to the limitations of 37 CFR 1.14, as a routine use, to the public if the record was filed in an application which became abandoned or in which the proceedings were terminated and which application is referenced by either a published application, an application open to public inspections or an issued patent.

9. A record from this system of records may be disclosed, as a routine use, to a Federal, State, or local law enforcement agency, if the USPTO becomes aware of a violation or potential violation of law or regulation.

SEC et al. v. MRI
SEC Exhibit 1020.0033
IPR2023-00255

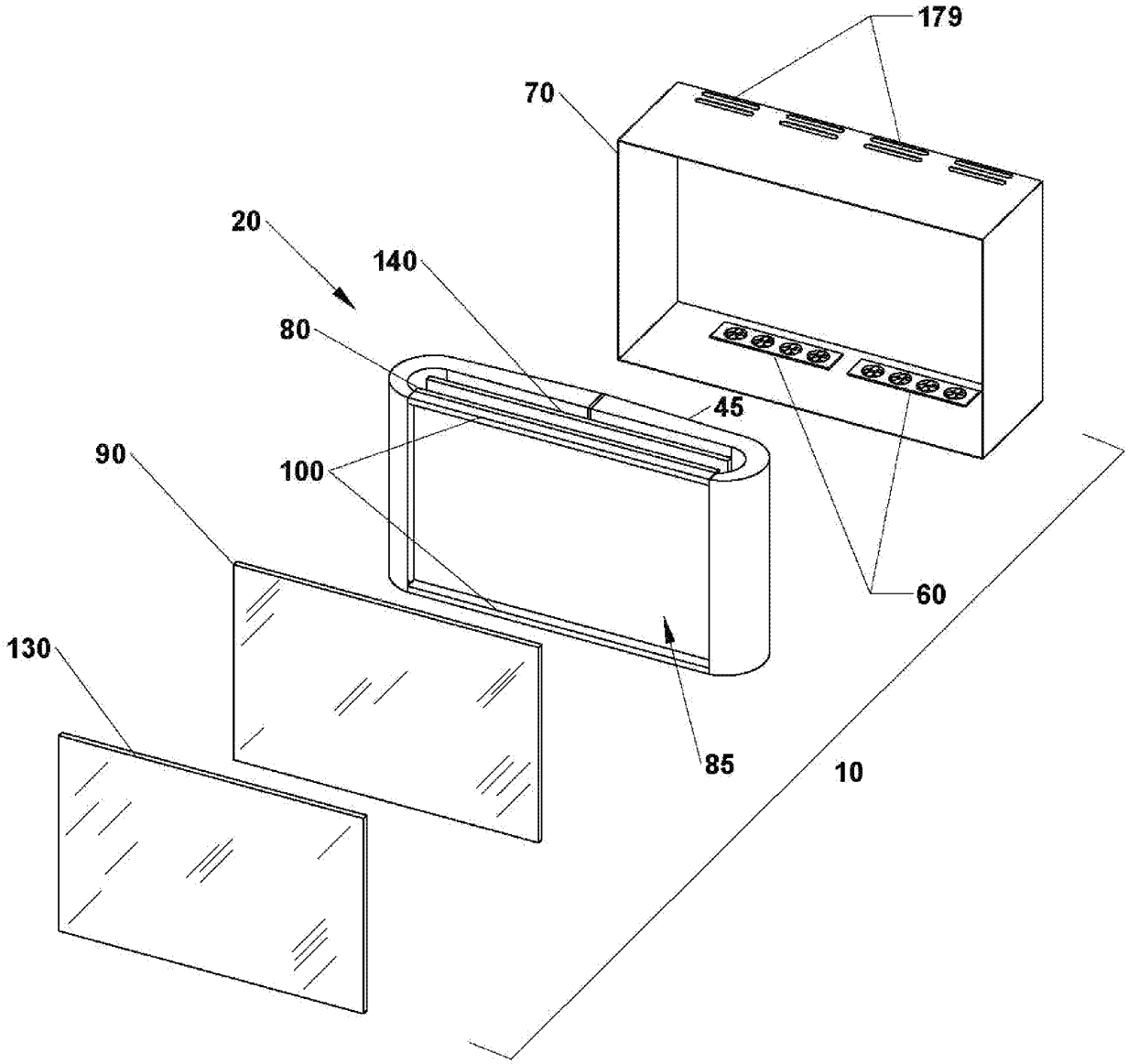

Fig. 1

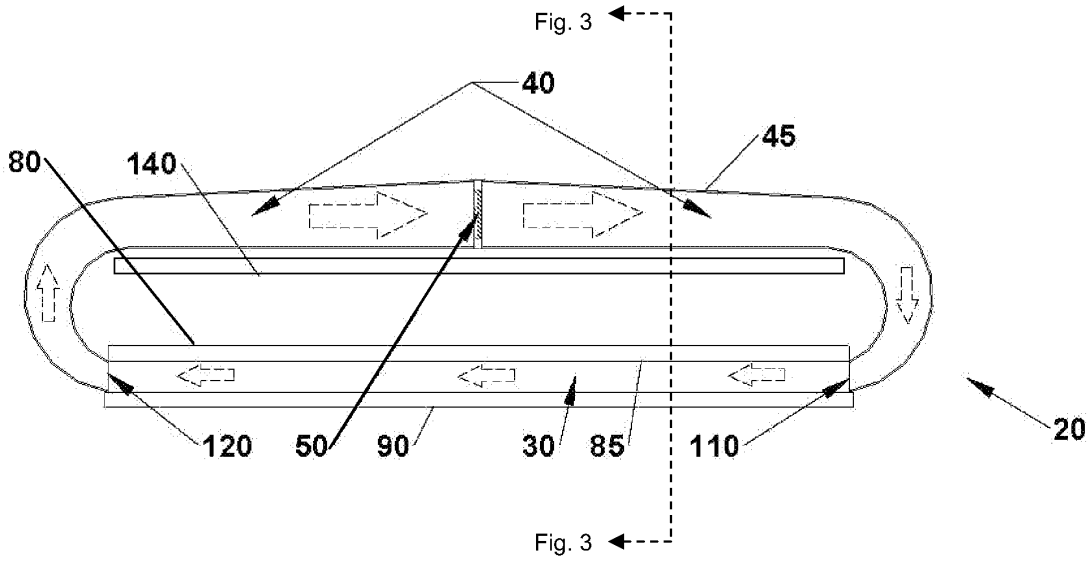

Fig. 2

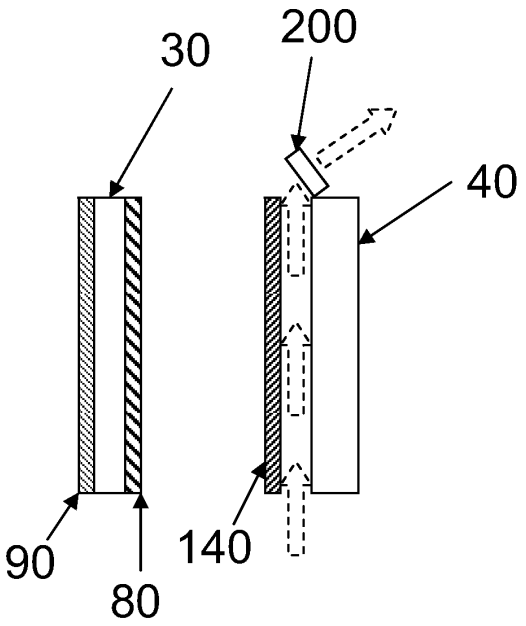

Fig. 3A

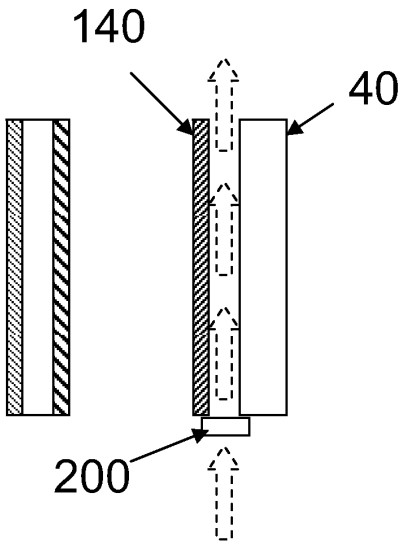

Fig. 3B

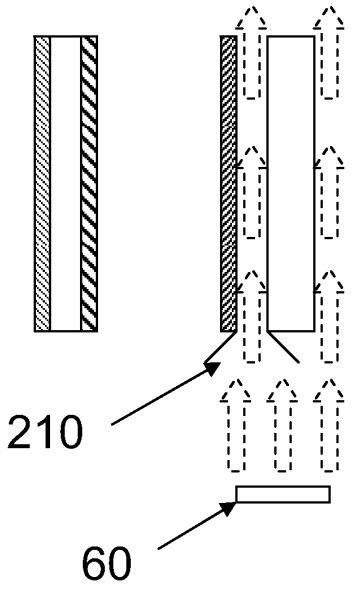

Fig. 3C

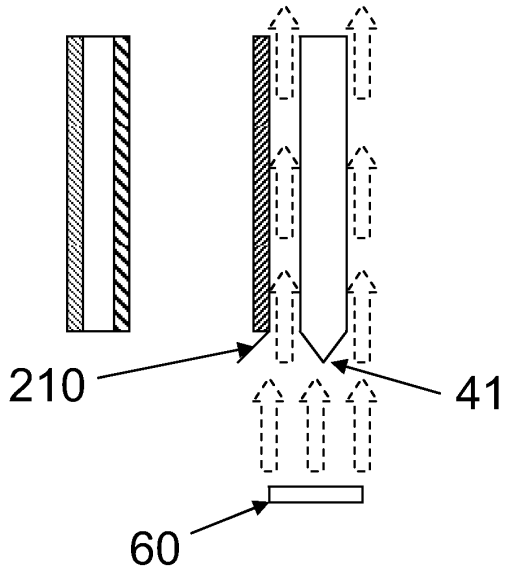

Fig. 3D

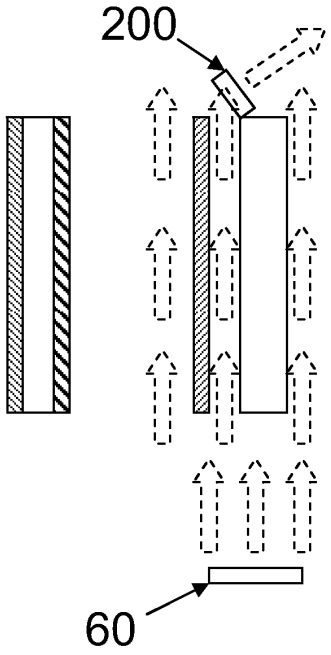

Fig. 3E

PATENT APPLICATION FEE DETERMINATION RECORD Substitute for Form PTO-875	Application or Docket Number 14/508,767

APPLICATION AS FILED - PART I

FOR	(Column 1) NUMBER FILED	(Column 2) NUMBER EXTRA	SMALL ENTITY RATE($)	SMALL ENTITY FEE($)	OR	OTHER THAN SMALL ENTITY RATE($)	OTHER THAN SMALL ENTITY FEE($)
BASIC FEE (37 CFR 1.16(a), (b), or (c))	N/A	N/A	N/A			N/A	280
SEARCH FEE (37 CFR 1.16(k), (i), or (m))	N/A	N/A	N/A			N/A	600
EXAMINATION FEE (37 CFR 1.16(o), (p), or (q))	N/A	N/A	N/A			N/A	720
TOTAL CLAIMS (37 CFR 1.16(i))	19 minus 20 =	*			OR	x 80 =	0.00
INDEPENDENT CLAIMS (37 CFR 1.16(h))	3 minus 3 =	*				x 420 =	0.00
APPLICATION SIZE FEE (37 CFR 1.16(s))	If the specification and drawings exceed 100 sheets of paper, the application size fee due is $310 ($155 for small entity) for each additional 50 sheets or fraction thereof. See 35 U.S.C. 41(a)(1)(G) and 37 CFR 1.16(s).						0.00
MULTIPLE DEPENDENT CLAIM PRESENT (37 CFR 1.16(j))							0.00
* If the difference in column 1 is less than zero, enter "0" in column 2.			TOTAL			TOTAL	1600

APPLICATION AS AMENDED - PART II

		(Column 1) CLAIMS REMAINING AFTER AMENDMENT		(Column 2) HIGHEST NUMBER PREVIOUSLY PAID FOR	(Column 3) PRESENT EXTRA	SMALL ENTITY RATE($)	SMALL ENTITY ADDITIONAL FEE($)	OR	OTHER THAN SMALL ENTITY RATE($)	OTHER THAN SMALL ENTITY ADDITIONAL FEE($)
AMENDMENT A	Total (37 CFR 1.16(i))	*	Minus	**	=	x =		OR	x =	
AMENDMENT A	Independent (37 CFR 1.16(h))	*	Minus	***	=	x =		OR	x =	
AMENDMENT A	Application Size Fee (37 CFR 1.16(s))									
AMENDMENT A	FIRST PRESENTATION OF MULTIPLE DEPENDENT CLAIM (37 CFR 1.16(j))							OR		
						TOTAL ADD'L FEE		OR	TOTAL ADD'L FEE	

		(Column 1) CLAIMS REMAINING AFTER AMENDMENT		(Column 2) HIGHEST NUMBER PREVIOUSLY PAID FOR	(Column 3) PRESENT EXTRA	RATE($)	ADDITIONAL FEE($)	OR	RATE($)	ADDITIONAL FEE($)
AMENDMENT B	Total (37 CFR 1.16(i))	*	Minus	**	=	x =		OR	x =	
AMENDMENT B	Independent (37 CFR 1.16(h))	*	Minus	***	=	x =		OR	x =	
AMENDMENT B	Application Size Fee (37 CFR 1.16(s))									
AMENDMENT B	FIRST PRESENTATION OF MULTIPLE DEPENDENT CLAIM (37 CFR 1.16(j))							OR		
						TOTAL ADD'L FEE		OR	TOTAL ADD'L FEE	

* If the entry in column 1 is less than the entry in column 2, write "0" in column 3.
** If the "Highest Number Previously Paid For" IN THIS SPACE is less than 20, enter "20".
*** If the "Highest Number Previously Paid For" IN THIS SPACE is less than 3, enter "3".
The "Highest Number Previously Paid For" (Total or Independent) is the highest found in the appropriate box in column 1.

UNITED STATES PATENT AND TRADEMARK OFFICE

UNITED STATES DEPARTMENT OF COMMERCE
United States Patent and Trademark Office
Address: COMMISSIONER FOR PATENTS
P.O. Box 1450
Alexandria, Virginia 22313-1450
www.uspto.gov

APPLICATION NUMBER	FILING or 371(c) DATE	GRP ART UNIT	FIL FEE REC'D	ATTY.DOCKET.NO	TOT CLAIMS	IND CLAIMS
14/508,767	10/07/2014	3744	1600	MAN2241-010J	19	3

CONFIRMATION NO. 5280

8698
STANDLEY LAW GROUP LLP
6300 Riverside Drive
Dublin, OH 43017

FILING RECEIPT

OC000000071333819

Date Mailed: 10/15/2014

Receipt is acknowledged of this non-provisional patent application. The application will be taken up for examination in due course. Applicant will be notified as to the results of the examination. Any correspondence concerning the application must include the following identification information: the U.S. APPLICATION NUMBER, FILING DATE, NAME OF APPLICANT, and TITLE OF INVENTION. Fees transmitted by check or draft are subject to collection. Please verify the accuracy of the data presented on this receipt. **If an error is noted on this Filing Receipt, please submit a written request for a Filing Receipt Correction. Please provide a copy of this Filing Receipt with the changes noted thereon. If you received a "Notice to File Missing Parts" for this application, please submit any corrections to this Filing Receipt with your reply to the Notice. When the USPTO processes the reply to the Notice, the USPTO will generate another Filing Receipt incorporating the requested corrections**

Inventor(s)

William DUNN, Alpharetta, GA;

Applicant(s)

Manufacturing Resources International, Inc., Alpharetta, GA

Power of Attorney: The patent practitioners associated with Customer Number 08698

Domestic Priority data as claimed by applicant

This application is a CON of 13/937,777 07/09/2013 PAT 8854572
which is a CON of 13/605,530 09/06/2012 PAT 8482695
which is a CON of 12/620,330 11/17/2009 PAT 8274622
which claims benefit of 61/115,333 11/17/2008
and is a CIP of 12/234,307 09/19/2008 PAT 8767165
which claims benefit of 61/033,064 03/03/2008
and said 12/620,330 11/17/2009
is a CIP of 12/234,360 09/19/2008
which claims benefit of 61/053,713 05/16/2008

Foreign Applications for which priority is claimed (You may be eligible to benefit from the **Patent Prosecution Highway** program at the USPTO. Please see http://www.uspto.gov for more information.) - None.
Foreign application information must be provided in an Application Data Sheet in order to constitute a claim to foreign priority. See 37 CFR 1.55 and 1.76.

If Required, Foreign Filing License Granted: 10/14/2014
The country code and number of your priority application, to be used for filing abroad under the Paris Convention, is **US 14/508,767**

SEC et al. v. MRI
SEC Exhibit 1020.0038
IPR2023-00255

Projected Publication Date: 01/22/2015

Non-Publication Request: No

Early Publication Request: No
Title

System for Using Constricted Convection with Closed Loop Cooling System As the Convection Plate

Preliminary Class

062

Statement under 37 CFR 1.55 or 1.78 for AIA (First Inventor to File) Transition Applications: No

PROTECTING YOUR INVENTION OUTSIDE THE UNITED STATES

Since the rights granted by a U.S. patent extend only throughout the territory of the United States and have no effect in a foreign country, an inventor who wishes patent protection in another country must apply for a patent in a specific country or in regional patent offices. Applicants may wish to consider the filing of an international application under the Patent Cooperation Treaty (PCT). An international (PCT) application generally has the same effect as a regular national patent application in each PCT-member country. The PCT process **simplifies** the filing of patent applications on the same invention in member countries, but **does not result** in a grant of "an international patent" and does not eliminate the need of applicants to file additional documents and fees in countries where patent protection is desired.

Almost every country has its own patent law, and a person desiring a patent in a particular country must make an application for patent in that country in accordance with its particular laws. Since the laws of many countries differ in various respects from the patent law of the United States, applicants are advised to seek guidance from specific foreign countries to ensure that patent rights are not lost prematurely.

Applicants also are advised that in the case of inventions made in the United States, the Director of the USPTO must issue a license before applicants can apply for a patent in a foreign country. The filing of a U.S. patent application serves as a request for a foreign filing license. The application's filing receipt contains further information and guidance as to the status of applicant's license for foreign filing.

Applicants may wish to consult the USPTO booklet, "General Information Concerning Patents" (specifically, the section entitled "Treaties and Foreign Patents") for more information on timeframes and deadlines for filing foreign patent applications. The guide is available either by contacting the USPTO Contact Center at 800-786-9199, or it can be viewed on the USPTO website at http://www.uspto.gov/web/offices/pac/doc/general/index.html.

For information on preventing theft of your intellectual property (patents, trademarks and copyrights), you may wish to consult the U.S. Government website, http://www.stopfakes.gov. Part of a Department of Commerce initiative, this website includes self-help "toolkits" giving innovators guidance on how to protect intellectual property in specific countries such as China, Korea and Mexico. For questions regarding patent enforcement issues, applicants may call the U.S. Government hotline at 1-866-999-HALT (1-866-999-4258).

SEC et al. v. MRI
SEC Exhibit 1020.0039
IPR2023-00255

LICENSE FOR FOREIGN FILING UNDER

Title 35, United States Code, Section 184

Title 37, Code of Federal Regulations, 5.11 & 5.15

GRANTED

The applicant has been granted a license under 35 U.S.C. 184, if the phrase "IF REQUIRED, FOREIGN FILING LICENSE GRANTED" followed by a date appears on this form. Such licenses are issued in all applications where the conditions for issuance of a license have been met, regardless of whether or not a license may be required as set forth in 37 CFR 5.15. The scope and limitations of this license are set forth in 37 CFR 5.15(a) unless an earlier license has been issued under 37 CFR 5.15(b). The license is subject to revocation upon written notification. The date indicated is the effective date of the license, unless an earlier license of similar scope has been granted under 37 CFR 5.13 or 5.14.

This license is to be retained by the licensee and may be used at any time on or after the effective date thereof unless it is revoked. This license is automatically transferred to any related applications(s) filed under 37 CFR 1.53(d). This license is not retroactive.

The grant of a license does not in any way lessen the responsibility of a licensee for the security of the subject matter as imposed by any Government contract or the provisions of existing laws relating to espionage and the national security or the export of technical data. Licensees should apprise themselves of current regulations especially with respect to certain countries, of other agencies, particularly the Office of Defense Trade Controls, Department of State (with respect to Arms, Munitions and Implements of War (22 CFR 121-128)); the Bureau of Industry and Security, Department of Commerce (15 CFR parts 730-774); the Office of Foreign AssetsControl, Department of Treasury (31 CFR Parts 500+) and the Department of Energy.

NOT GRANTED

No license under 35 U.S.C. 184 has been granted at this time, if the phrase "IF REQUIRED, FOREIGN FILING LICENSE GRANTED" DOES NOT appear on this form. Applicant may still petition for a license under 37 CFR 5.12, if a license is desired before the expiration of 6 months from the filing date of the application. If 6 months has lapsed from the filing date of this application and the licensee has not received any indication of a secrecy order under 35 U.S.C. 181, the licensee may foreign file the application pursuant to 37 CFR 5.15(b).

SelectUSA

The United States represents the largest, most dynamic marketplace in the world and is an unparalleled location for business investment, innovation, and commercialization of new technologies. The U.S. offers tremendous resources and advantages for those who invest and manufacture goods here. Through SelectUSA, our nation works to promote and facilitate business investment. SelectUSA provides information assistance to the international investor community; serves as an ombudsman for existing and potential investors; advocates on behalf of U.S. cities, states, and regions competing for global investment; and counsels U.S. economic development organizations on investment attraction best practices. To learn more about why the United States is the best country in the world to develop technology, manufacture products, deliver services, and grow your business, visit http://www.SelectUSA.gov or call +1-202-482-6800.

SEC et al. v. MRI
SEC Exhibit 1020.0040
IPR2023-00255

PATENT ASSIGNMENT COVER SHEET

Electronic Version v1.1
Stylesheet Version v1.2

EPAS ID: PAT3132297

SUBMISSION TYPE:	NEW ASSIGNMENT
NATURE OF CONVEYANCE:	SECURITY INTEREST

CONVEYING PARTY DATA

Name	Execution Date
MANUFACTURING RESOURCES INTERNATIONAL, INC.	11/25/2014

RECEIVING PARTY DATA

Name:	BANK OF AMERICA, N.A.
Street Address:	100 NORTH TRYON STREET
City:	CHARLOTTE
State/Country:	NORTH CAROLINA
Postal Code:	28255

PROPERTY NUMBERS Total: 24

Property Type	Number
Application Number:	14508767
Application Number:	14508621
Application Number:	14447164
Application Number:	14453966
Application Number:	14326053
Application Number:	14475173
Application Number:	14300869
Application Number:	14457611
Application Number:	14322962
Application Number:	14326059
Application Number:	62012559
Application Number:	62012572
Application Number:	62013225
Application Number:	62012785
Application Number:	62013917
Application Number:	62061950
Application Number:	62061512
Application Number:	62055255
Application Number:	62064304
Application Number:	13279401
Application Number:	13353371

Property Type	Number
Application Number:	13296981
Application Number:	13361305
Application Number:	61910568

CORRESPONDENCE DATA

Fax Number: (804)698-2007

Correspondence will be sent to the e-mail address first; if that is unsuccessful, it will be sent using a fax number, if provided; if that is unsuccessful, it will be sent via US Mail.

Phone: 804-775-1071

Email: bdavis1@mcguirewoods.com

Correspondent Name: ROBIN C. VANCE

Address Line 1: 901 EAST CARY STREET

Address Line 4: RICHMOND, VIRGINIA 23219-4030

NAME OF SUBMITTER:	ROBIN C. VANCE
SIGNATURE:	/Robin C. Vance/
DATE SIGNED:	12/04/2014
	This document serves as an Oath/Declaration (37 CFR 1.63).

Total Attachments: 6

source=MRI Patent Security Agreement (Nov 2014)#page1.tif
source=MRI Patent Security Agreement (Nov 2014)#page2.tif
source=MRI Patent Security Agreement (Nov 2014)#page3.tif
source=MRI Patent Security Agreement (Nov 2014)#page4.tif
source=MRI Patent Security Agreement (Nov 2014)#page5.tif
source=MRI Patent Security Agreement (Nov 2014)#page6.tif

PATENT SECURITY AGREEMENT

(November 2014)

THIS PATENT SECURITY AGREEMENT is between **Manufacturing Resources International, Inc.**, a Georgia corporation and **Bank of America, N.A.** Capitalized terms used and not otherwise defined herein shall have the meaning specified in the Security Agreement (as hereinafter defined).

WHEREAS, **Manufacturing Resources International, Inc.**, a Georgia corporation (herein referred to as "Grantor"), owns the Patents (as hereinafter defined) listed on Schedule 1 annexed hereto;

WHEREAS, Grantor and **Bank of America, NA** (the "Grantee") are parties to a Security Agreement dated October 20, 2011 (as amended, modified or supplemented from time to time, the "Security Agreement");

WHEREAS, pursuant to the terms of the Security Agreement, Grantor has granted to Grantee a security interest in substantially all the assets of the Grantor including all right, title and interest of Grantor in, to and under all Grantor's Patents, together with any reissues, continuations, continuations-in-part or extensions thereof, whether presently existing or hereafter arising or acquired, and all products and proceeds thereof, including, without limitation, any and all causes of action which may exist by reason of infringement thereof for the full term of the Patents, to secure the payment of all Indebtedness referred to in Section 2 of the Security Agreement (the "Obligations");

NOW, THEREFORE, for good and valuable consideration, the receipt and sufficiency of which are hereby acknowledged, Grantor does hereby grant to Grantee a continuing security interest in all of Grantor's right, title and interest in, to and under the following (all of the following items or types of property being herein collectively referred to as the "U.S. Patent Collateral"), whether presently existing or hereafter arising or acquired:

(i) each United States patent to which Grantor now or hereafter has title and any divisions or continuations thereof, as well as any application for a United States patent now or hereinafter made by Grantor, including, without limitation, each patent referred to in Schedule 1 annexed hereto (collectively, the "Patents"); and

(ii) all products and proceeds of the foregoing, including, without limitation, any claim by Grantor against third parties for past, present or future infringement of any Patent, including, without limitation, any Patent referred to in Schedule 1 annexed hereto.

This security interest is granted in conjunction with the security interests granted to the Grantee pursuant to the Security Agreement. Grantor does hereby further acknowledge and affirm that the rights and remedies of Grantee with respect to the security interest in the Patent Collateral made and granted hereby are more fully set forth in the Security Agreement, the terms and provisions of which are incorporated by reference herein as if fully set forth herein.

[signature page follows]

IN WITNESS WHEREOF, Grantor has caused this Patent Security Agreement to be duly executed by its officer thereunto duly authorized as of the 25th day of November, 2014.

MANUFACTURING RESOURCES INTERNATIONAL INC.

By: _____
Name: William R. Dunn
Title: President

Acknowledged:

BANK OF AMERICA, N.A.

By: _____
Name: John McDuffie
Title: Senior Vice President

61642068_2

SEC et al. v. MRI
SEC Exhibit 1020.0044
IPR2023-00255

STATE OF GEORGIA)
) SS.:
COUNTY OF Cobb)

On the 25th of November, 2014, before me personally came William R. Dunn, to me personally known to be the person described in and who executed the foregoing instrument as President of Manufacturing Resources International, Inc. who being by me duly sworn, did depose and say that he is the Manufacturing Resources International, Inc., the corporation described in and which executed the foregoing instrument; that he knows the seal of such corporation; that the seal affixed to said instrument is such corporation's seal; that the said instrument was signed and sealed on behalf of said corporation by order of its Board of Directors; that he signed his name thereto by like orders; and that he acknowledged said instrument to be the free act and deed of said corporation.

Kenneth J Dewhurst
NOTARY PUBLIC

My commission expires: 2/27/2018

[AFFIX NOTARIAL SEAL]

KENNETH J DEWHURST
MY COMMISSION EXPIRES
FEB
27
2018
COBB CO., GEORGIA
NOTARY PUBLIC

61642068_2

Schedule 1 to Patent Security Agreement
Manufacturing Resources International, Inc.

U.S. Patent Applications:

1. SYSTEM FOR USING CONSTRICTED CONVECTION WITH CLOSED LOOP COOLING SYSTEM AS THE CONVECTION PLATE. U.S. Pat. Appln. No. 14/508,767; filed 10/07/2014

2. CONSTRICTED CONVECTION COOLING SYSTEM FOR AN ELECTRONIC DISPLAY. U.S. Pat. Appln. No. 14/508,621; filed 10/07/2014

3. BACKLIGHT ADJUSTMENT SYSTEM. U.S. Pat. Appln. No. 14/447,164; filed 07/30/2014

4. DYNAMIC DIMMING LED BACKLIGHT. U.S. Pat. Appln. No. 14/453,966; filed 08/07/2014

5. EXPANDED HEAT SINK FOR ELECTRONIC DISPLAYS. U.S. Pat. Appln. No. 14/326,053; filed 07/08/2014

6. SYSTEM FOR COOLING AN ELECTRONIC IMAGE ASSEMBLY WITH A HEAT EXCHANGER HAVING INTERNAL FANS. U.S. Pat. Appln. No. 14/475,173; filed 09/02/2014

7. SYSTEM FOR COOLING AN ELECTRONIC IMAGE ASSEMBLY WITH MANIFOLDS AND AMBIENT GAS. U.S. Pat. Appln. No. 14/300,869; filed 06/10/2014

8. SYSTEM AND METHOD FOR THERMALLY CONTROLLING AN ELECTRONIC DISPLAY WITH REDUCED NOISE EMISSIONS. U.S. Pat. Appln. No. 14/457,611; filed 08/12/2014

9. AIRGUIDE BACKLIGHT ASSEMBLY. U.S. Pat. Appln. No. 14/322,962; filed 07/03/2014

10. FIGURE EIGHT CLOSED LOOP COOLING SYSTEM FOR ELECTRONIC DISPLAY. U.S. Pat. Appln. No. 14/326,059; filed 07/08/2014

11. SEALED TRANSPARENT LIQUID CRYSTAL DISPLAY ASSEMBLY. U.S. Pat. Appln. No. 62/012,559; filed 06/16/2014

12. LED ASSEMBLY FOR TRANSPARENT LIQUID CRYSTAL DISPLAY. U.S. Pat. Appln. No. 62/012,572; filed 06/16/2014

13. WIRELESS VIDEO TRANSMISSION SYSTEM FOR LIQUID CRYSTAL DISPLAY. U.S. Pat. Appln. No. 62/013,225; filed 06/17/2014

SEC et al. v. MRI
SEC Exhibit 1020.0047
IPR2023-00255

14. COOLING SYSTEM FOR LIQUID CRYSTAL DISPLAY. U.S. Pat. Appln. No. 62/012,785; filed 06/16/2014

15. SYSTEM FOR TRACKING AND ANALYZING DISPLAY CASE USAGE. U.S. Pat. Appln. No. 62/013,917; filed 06/18/2014

16. SYSTEM FOR DECREASING ENERGY USAGE OF A TRANSPARENT LCD DISPLAY CASE. U.S. Pat. Appln. No. 62/061,950; filed 10/09/2014

17. LED ASSEMBLY FOR TRANSPARENT LIQUID CRYSTAL DISPLAY AND STATIC GRAPHIC. U.S. Pat. Appln. No. 62/061,512; filed 10/08/2014

18. Optical Assembly for Transparent LCD Display Case (aka Beverage Cooler Display with Additional Linear Polarizer). U.S. Pat. Appln. No. 62/055,255; filed 09/25/2014

19. SYSTEM AND METHOD FOR PREVENTING DAMAGE TO PRODUCTS. U.S. Pat. Appln. No. 62/064,304; filed 10/15/2014

20. SYSTEM FOR COOLING AN ELECTRONIC IMAGE ASSEMBLY WITH MANIFOLDS AND AMBIENT GAS. U.S. Pat. Appln. No. 13/279,401; U.S. Patent No. 8,755,021; filed 10/24/2011

21. BACKLIGHT ADJUSTMENT SYSTEM. U.S. Pat. Appln. No. 13/353,371; U.S. Patent No. 8,829,815; filed 09/09/2014

22. GLASS ASSEMBLY. U.S. Pat. Appln. No. 13/296,981; filed 11/15/2011.

23. SYSTEM AND METHOD FOR DYNAMIC LOAD SHARING BETWEEN ELECTRONIC DISPLAYS. U.S. Pat. Appln. No. 13/361,305; filed 01/30/2012

24. EXPANDABLE LIGHT GUIDE FOR BACKLIGHT. U.S. Pat. Appln. No. 61/910,568; filed 12/02/2013

SEC et al. v. MRI
SEC Exhibit 1020.0048
IPR2023-00255

PTO/SB/08a (01-10)
Approved for use through 07/31/2012. OMB 0651-0031
U.S. Patent and Trademark Office; U.S. DEPARTMENT OF COMMERCE

Under the Paperwork Reduction Act of 1995, no persons are required to respond to a collection of information unless it contains a valid OMB control number.

INFORMATION DISCLOSURE STATEMENT BY APPLICANT (**Not for submission under 37 CFR 1.99)**		
	Application Number	14508767
	Filing Date	2014-10-07
	First Named Inventor	Dunn, William
	Art Unit	2871
	Examiner Name	KIM, RICHARD H
	Attorney Docket Number	MAN2241-010J

U.S.PATENTS						Remove
Examiner Initial*	Cite No	Patent Number	Kind Code[1]	Issue Date	Name of Patentee or Applicant of cited Document	Pages,Columns,Lines where Relevant Passages or Relevant Figures Appear
	1	4093355		1978-06-06	Kaplit et al	
	2	4593978		1986-06-10	Mourey et al	
	3	4634225		1987-01-06	Haim et al	
	4	5029982		1991-07-09	Nash	
	5	5088806		1992-02-18	McCartney et al	
	6	5247374		1993-09-21	Tereda	
	7	5559614		1996-09-24	Urbish et al	
	8	5767489		1998-06-16	Ferrier	

SEC et al. v. MRI
SEC Exhibit 1020.0049
IPR2023-00255

INFORMATION DISCLOSURE STATEMENT BY APPLICANT (Not for submission under 37 CFR 1.99)	Application Number	14508767
	Filing Date	2014-10-07
	First Named Inventor	Dunn, William
	Art Unit	2871
	Examiner Name	KIM, RICHARD H
	Attorney Docket Number	MAN2241-010J

	9	5748269		1998-05-05	Harris et al	
	10	5818010		1998-10-06	McCann	
	11	6089751		2000-07-18	Conover et al	
	12	6157432		2000-12-05	Helbing	
	13	6191839		2001-02-20	Briley	
	14	6417900		2002-07-09	Shin et al	
	15	6535266		2003-03-18	Nemeth et al	
	16	6628355		2003-09-30	Takahara	
	17	6839104		2005-01-04	Taniguchi et al	
	18	6885412		2005-04-16	Ohnishi et al	
	19	6943768		2005-09-13	Cavanaugh et al	

SEC et al. v. MRI
SEC Exhibit 1020.0050
IPR2023-00255

INFORMATION DISCLOSURE STATEMENT BY APPLICANT (Not for submission under 37 CFR 1.99)		
	Application Number	14508767
	Filing Date	2014-10-07
	First Named Inventor	Dunn, William
	Art Unit	2871
	Examiner Name	KIM, RICHARD H
	Attorney Docket Number	MAN2241-010J

	20	5991153		1999-11-23	Heady , et al.	
	21	6392727		2002-05-21	Larson , et al.	
	22	6961108		2005-11-01	Wang , et al.	
	23	6909486		2005-06-21	Wang , et al.	
	24	7083285		2006-08-01	Hsu	
	25	5869919		1999-02-09	SATO	
	26	7059757		2006-06-13	Shimizu	
	27	7602469		2009-10-13	Shin	
	28	8269916		2012-09-18	Ohkawa	
	29	6493440		2002-12-10	Gromatzky	
	30	7667964		2010-02-23	Kang	

SEC et al. v. MRI
SEC Exhibit 1020.0051
IPR2023-00255

INFORMATION DISCLOSURE STATEMENT BY APPLICANT (Not for submission under 37 CFR 1.99)	Application Number	14508767
	Filing Date	2014-10-07
	First Named Inventor	Dunn, William
	Art Unit	2871
	Examiner Name	KIM, RICHARD H
	Attorney Docket Number	MAN2241-010J

If you wish to add additional U.S. Patent citation information please click the Add button. Add

U.S.PATENT APPLICATION PUBLICATIONS Remove

Examiner Initial*	Cite No	Publication Number	Kind Code[1]	Publication Date	Name of Patentee or Applicant of cited Document	Pages,Columns,Lines where Relevant Passages or Relevant Figures Appear
	1	20020101553		2002-08-01	Enomoto et al	
	2	20020126248		2002-09-12	Yoshida	
	3	20030007109		2003-01-09	Park	
	4	20040036834		2004-02-26	Ohnishi et al	
	5	20040165139		2004-08-26	Anderson et al	
	6	20060132699		2006-06-22	Joo-Waon Cho et al	
	7	20060209266		2006-09-21	Motoyasu Utsunomiya	
	8	20070151664		2007-07-05	Jae Ho Shin	
	9	20060132699		2006-06-22	Cho	

SEC et al. v. MRI
SEC Exhibit 1020.0052
IPR2023-00255

INFORMATION DISCLOSURE STATEMENT BY APPLICANT (Not for submission under 37 CFR 1.99)		
	Application Number	14508767
	Filing Date	2014-10-07
	First Named Inventor	Dunn, William
	Art Unit	2871
	Examiner Name	KIM, RICHARD H
	Attorney Docket Number	MAN2241-010J

	10	20070065091		2007-03-22	Hinata	
	11	20100171889		2010-07-08	Pantel	

If you wish to add additional U.S. Published Application citation information please click the Add button. Add

FOREIGN PATENT DOCUMENTS Remove

Examiner Initial*	Cite No	Foreign Document Number[3]	Country Code[2] ¡	Kind Code[4]	Publication Date	Name of Patentee or Applicant of cited Document	Pages,Columns,Lines where Relevant Passages or Relevant Figures Appear	T[5]
	1	JP03153212	JP		1991-07-01	Hitachi Ltd.		☐
	2	JP08194437	JP		1996-07-30	Matsushita Electric Works Ltd		☐
	3	JP11160727	JP		1999-06-18	Advanced Display KK		☐
	4	JP2002158475	JP		2002-05-31	Fujitsu General Ltd		☐
	5	JP2005134849	JP		2005-05-26	Nagoya Electric Works		☐
	6	KR1020070070675	KR		2007-07-04	Nautilus Hyosung Inc.		☐
	7	GB2402205	GB		2004-01-12	Densitron Technologies PLC		☐

SEC et al. v. MRI
SEC Exhibit 1020.0053
IPR2023-00255

INFORMATION DISCLOSURE STATEMENT BY APPLICANT (Not for submission under 37 CFR 1.99)	Application Number	14508767
	Filing Date	2014-10-07
	First Named Inventor	Dunn, William
	Art Unit	2871
	Examiner Name	KIM, RICHARD H
	Attorney Docket Number	MAN2241-010J

	8	WO2005079129	WO		2005-08-25	Inssimainos Oy		☐
	9	JP2008292743	JP		2008-12-04	NES DISPLAY SOLUTIONS LTD.		☐
	10	KR100666961	KR		2007-01-10	PHICOM CORP.		☐
	11	KR20060016469	KR		2006-02-22	SAMSUNG ELECTRONICS CO., LTD		☐

If you wish to add additional Foreign Patent Document citation information please click the Add button Add

NON-PATENT LITERATURE DOCUMENTS Remove

Examiner Initials*	Cite No	Include name of the author (in CAPITAL LETTERS), title of the article (when appropriate), title of the item (book, magazine, journal, serial, symposium, catalog, etc), date, pages(s), volume-issue number(s), publisher, city and/or country where published.	T[5]
	1	ZEEF, HUBING, EMC analysis of 18' LCD Monitor, August 2000, 1 page	☐

If you wish to add additional non-patent literature document citation information please click the Add button Add

EXAMINER SIGNATURE

Examiner Signature		Date Considered	

*EXAMINER: Initial if reference considered, whether or not citation is in conformance with MPEP 609. Draw line through a citation if not in conformance and not considered. Include copy of this form with next communication to applicant.

[1] See Kind Codes of USPTO Patent Documents at www.USPTO.GOV or MPEP 901.04. [2] Enter office that issued the document, by the two-letter code (WIPO Standard ST.3). [3] For Japanese patent documents, the indication of the year of the reign of the Emperor must precede the serial number of the patent document. [4] Kind of document by the appropriate symbols as indicated on the document under WIPO Standard ST.16 if possible. [5] Applicant is to place a check mark here if English language translation is attached.

SEC et al. v. MRI
SEC Exhibit 1020.0054
IPR2023-00255

INFORMATION DISCLOSURE STATEMENT BY APPLICANT (Not for submission under 37 CFR 1.99)		
	Application Number	14508767
	Filing Date	2014-10-07
	First Named Inventor	Dunn, William
	Art Unit	2871
	Examiner Name	KIM, RICHARD H
	Attorney Docket Number	MAN2241-010J

CERTIFICATION STATEMENT

Please see 37 CFR 1.97 and 1.98 to make the appropriate selection(s):

☐ That each item of information contained in the information disclosure statement was first cited in any communication from a foreign patent office in a counterpart foreign application not more than three months prior to the filing of the information disclosure statement. See 37 CFR 1.97(e)(1).

OR

☐ That no item of information contained in the information disclosure statement was cited in a communication from a foreign patent office in a counterpart foreign application, and, to the knowledge of the person signing the certification after making reasonable inquiry, no item of information contained in the information disclosure statement was known to any individual designated in 37 CFR 1.56(c) more than three months prior to the filing of the information disclosure statement. See 37 CFR 1.97(e)(2).

☐ See attached certification statement.

☐ The fee set forth in 37 CFR 1.17 (p) has been submitted herewith.

☒ A certification statement is not submitted herewith.

SIGNATURE

A signature of the applicant or representative is required in accordance with CFR 1.33, 10.18. Please see CFR 1.4(d) for the form of the signature.

Signature	/Tyler Dunham/	Date (YYYY-MM-DD)	2015-01-02
Name/Print	Tyler Dunham	Registration Number	60364

This collection of information is required by 37 CFR 1.97 and 1.98. The information is required to obtain or retain a benefit by the public which is to file (and by the USPTO to process) an application. Confidentiality is governed by 35 U.S.C. 122 and 37 CFR 1.14. This collection is estimated to take 1 hour to complete, including gathering, preparing and submitting the completed application form to the USPTO. Time will vary depending upon the individual case. Any comments on the amount of time you require to complete this form and/or suggestions for reducing this burden, should be sent to the Chief Information Officer, U.S. Patent and Trademark Office, U.S. Department of Commerce, P.O. Box 1450, Alexandria, VA 22313-1450. DO NOT SEND FEES OR COMPLETED FORMS TO THIS ADDRESS. **SEND TO: Commissioner for Patents, P.O. Box 1450, Alexandria, VA 22313-1450.**

SEC et al. v. MRI
SEC Exhibit 1020.0055
IPR2023-00255

Privacy Act Statement

The Privacy Act of 1974 (P.L. 93-579) requires that you be given certain information in connection with your submission of the attached form related to a patent application or patent. Accordingly, pursuant to the requirements of the Act, please be advised that: (1) the general authority for the collection of this information is 35 U.S.C. 2(b)(2); (2) furnishing of the information solicited is voluntary; and (3) the principal purpose for which the information is used by the U.S. Patent and Trademark Office is to process and/or examine your submission related to a patent application or patent. If you do not furnish the requested information, the U.S. Patent and Trademark Office may not be able to process and/or examine your submission, which may result in termination of proceedings or abandonment of the application or expiration of the patent.

The information provided by you in this form will be subject to the following routine uses:

1. The information on this form will be treated confidentially to the extent allowed under the Freedom of Information Act (5 U.S.C. 552) and the Privacy Act (5 U.S.C. 552a). Records from this system of records may be disclosed to the Department of Justice to determine whether the Freedom of Information Act requires disclosure of these record s.

2. A record from this system of records may be disclosed, as a routine use, in the course of presenting evidence to a court, magistrate, or administrative tribunal, including disclosures to opposing counsel in the course of settlement negotiations.

3. A record in this system of records may be disclosed, as a routine use, to a Member of Congress submitting a request involving an individual, to whom the record pertains, when the individual has requested assistance from the Member with respect to the subject matter of the record.

4. A record in this system of records may be disclosed, as a routine use, to a contractor of the Agency having need for the information in order to perform a contract. Recipients of information shall be required to comply with the requirements of the Privacy Act of 1974, as amended, pursuant to 5 U.S.C. 552a(m).

5. A record related to an International Application filed under the Patent Cooperation Treaty in this system of records may be disclosed, as a routine use, to the International Bureau of the World Intellectual Property Organization, pursuant to the Patent Cooperation Treaty.

6. A record in this system of records may be disclosed, as a routine use, to another federal agency for purposes of National Security review (35 U.S.C. 181) and for review pursuant to the Atomic Energy Act (42 U.S.C. 218(c)).

7. A record from this system of records may be disclosed, as a routine use, to the Administrator, General Services, or his/her designee, during an inspection of records conducted by GSA as part of that agency's responsibility to recommend improvements in records management practices and programs, under authority of 44 U.S.C. 2904 and 2906. Such disclosure shall be made in accordance with the GSA regulations governing inspection of records for this purpose, and any other relevant (i.e., GSA or Commerce) directive. Such disclosure shall not be used to make determinations about individuals.

8. A record from this system of records may be disclosed, as a routine use, to the public after either publication of the application pursuant to 35 U.S.C. 122(b) or issuance of a patent pursuant to 35 U.S.C. 151. Further, a record may be disclosed, subject to the limitations of 37 CFR 1.14, as a routine use, to the public if the record was filed in an application which became abandoned or in which the proceedings were terminated and which application is referenced by either a published application, an application open to public inspections or an issued patent.

9. A record from this system of records may be disclosed, as a routine use, to a Federal, State, or local law enforcement agency, if the USPTO becomes aware of a violation or potential violation of law or regulation.

SEC et al. v. MRI
SEC Exhibit 1020.0056
IPR2023-00255

Electronic Acknowledgement Receipt

EFS ID:	21105253
Application Number:	14508767
International Application Number:	
Confirmation Number:	5280
Title of Invention:	System for Using Constricted Convection with Closed Loop Cooling System As the Convection Plate
First Named Inventor/Applicant Name:	William DUNN
Customer Number:	8698
Filer:	Tyler Steven Dunham/Kimberly Hefner
Filer Authorized By:	Tyler Steven Dunham
Attorney Docket Number:	MAN2241-010J
Receipt Date:	02-JAN-2015
Filing Date:	07-OCT-2014
Time Stamp:	10:53:52
Application Type:	Utility under 35 USC 111(a)

Payment information:

Submitted with Payment	no

File Listing:

Document Number	Document Description	File Name	File Size(Bytes)/ Message Digest	Multi Part /.zip	Pages (if appl.)
1	Foreign Reference	20110617_GB_2402205.pdf	1924346 54a41da465639c053ddd0f08ec1db89590fa9508	no	18

Warnings:

Information:

SEC et al. v. MRI
SEC Exhibit 1020.0057
IPR2023-00255

2	Foreign Reference	20110617_WO2005079129.pdf	3354369 db6c51dc1d593eff86c406e9943bb5a52ca1eca8	no	22
Warnings:					
Information:					
3	Foreign Reference	JP3153212A.pdf	203920 5fe91ea71ac6f2c2087e39eb0ce1a971f981a245	no	4
Warnings:					
Information:					
4	Foreign Reference	JP8194437A.pdf	301371 a4b5aec2bc53f658aa383af4c39db0bec7f13ecc	no	6
Warnings:					
Information:					
5	Foreign Reference	JP11160727A.pdf	552169 1269750fb1611ea0fb512ade6a84086f075286f9	no	11
Warnings:					
Information:					
6	Foreign Reference	JP2002158475A.pdf	457078 a8b2e4c0fc6f43b30fdf10bc0affb11ce22c9094	no	7
Warnings:					
Information:					
7	Foreign Reference	JP2005134849A.pdf	397970 8d9c595b74eabef2c978736dec20c682bf05458d	no	10
Warnings:					
Information:					
8	Foreign Reference	JP2008292743A2.pdf	892138 d91b19b8e36583b9fef462bd1d9879a07bf7a6fe	no	21
Warnings:					
Information:					
9	Foreign Reference	KR100666961B1.pdf	583187 ded4035212d81081a058f7d3fdaa8e21e981fef0	no	15
Warnings:					
Information:					
10	Foreign Reference	KR20060016469A.pdf	813478 dfa779770ba0cfc35b142aaa9cceb1218f27fcb7	no	23
Warnings:					
Information:					

11	Foreign Reference	KR20070070675A.pdf	31103 40ebb0985ded05a78e8c0936b55c0f259a0aded3	no	1
Warnings:					
Information:					
12	Non Patent Literature	NPL1.pdf	28927 3ad3ae14fb0f5e5b728a7549da0870c590a5c8e1	no	1
Warnings:					
Information:					
13	Information Disclosure Statement (IDS) Form (SB08)	20150102_IDS_MAN2241-010J.pdf	613930 c02fe644e4958aeaf7316081e86112c572939fbf	no	8
Warnings:					
Information:					
		Total Files Size (in bytes):	10153986		

This Acknowledgement Receipt evidences receipt on the noted date by the USPTO of the indicated documents, characterized by the applicant, and including page counts, where applicable. It serves as evidence of receipt similar to a Post Card, as described in MPEP 503.

<u>New Applications Under 35 U.S.C. 111</u>
If a new application is being filed and the application includes the necessary components for a filing date (see 37 CFR 1.53(b)-(d) and MPEP 506), a Filing Receipt (37 CFR 1.54) will be issued in due course and the date shown on this Acknowledgement Receipt will establish the filing date of the application.

<u>National Stage of an International Application under 35 U.S.C. 371</u>
If a timely submission to enter the national stage of an international application is compliant with the conditions of 35 U.S.C. 371 and other applicable requirements a Form PCT/DO/EO/903 indicating acceptance of the application as a national stage submission under 35 U.S.C. 371 will be issued in addition to the Filing Receipt, in due course.

<u>New International Application Filed with the USPTO as a Receiving Office</u>
If a new international application is being filed and the international application includes the necessary components for an international filing date (see PCT Article 11 and MPEP 1810), a Notification of the International Application Number and of the International Filing Date (Form PCT/RO/105) will be issued in due course, subject to prescriptions concerning national security, and the date shown on this Acknowledgement Receipt will establish the international filing date of the application.

(12) UK Patent Application (19) GB (11) 2 402 205 (13) A

(43) Date of A Publication 01.12.2004

(21) Application No: 0311575.5

(22) Date of Filing: 20.05.2003

(71) Applicant(s):
Densitron Technologies PLC
(Incorporated in the United Kingdom)
Unit 4 Airport Industrial Estate,
BIGGIN HILL, Kent, TN16 3BW,
United Kingdom

(72) Inventor(s):
Leslie John Yare

(74) Agent and/or Address for Service:
Williams Powell
Morley House, 26-30 Holborn Viaduct,
LONDON, EC1A 2BP, United Kingdom

(51) INT CL[7]:
H04N 5/64 , F25D 23/12 , F28D 3/00 11/02 15/02 , F28F 3/00

(52) UK CL (Edition W):
F4U U22X U25B
F4H H2F H2H H2L
F4S S4B
U1S S2293 S2298

(56) Documents Cited:
CN 001110453 A
JP 090307257 A
US 6474410 A
JP 100042226 A
JP 060268388 A
US 6039111 A

(58) Field of Search:
UK CL (Edition V): F4H, F4U
INT CL[7] A47F, F24F, F25B, F25D, F28B, F28C, F28D, F28F, H04N
Other: ON-LINE : WPI; EPODOC; JAPIO; EPOQUE English Full TXTE;

(54) Abstract Title: **A display system cabinet and display system including heat removal means**

(57) A display cabinet 10 has a sealed airtight compartment 30 for mounting a display system 20, and includes heat transfer means 70, such as a corrugated heat exchanger, to dissipate heat from the airtight compartment to the surrounding environment via thermal communication with an unsealed atmospheric zone 40. Heat is dissipated by air drawn through vents 60 and the atmospheric air zone 40 by at least one fan 50, which passes across one or more surfaces of the heat exchanger 70. Within the sealed compartment at least one fan 25 circulates air through a rear portion 25, behind a baffle plate 90 and also across the heat exchanger 70. The airtight compartment may include a pressurised zone 85 created by at least one fan 80, and the heat transfer means may alternatively include a heat pipe, a refrigeration unit, a flat plate heat exchanger, or a heat wheel. The display system may include one or more of a plasma display, an LCD display, a TFT display, a CRT display, an LED display, a projection display.

Fig. 1

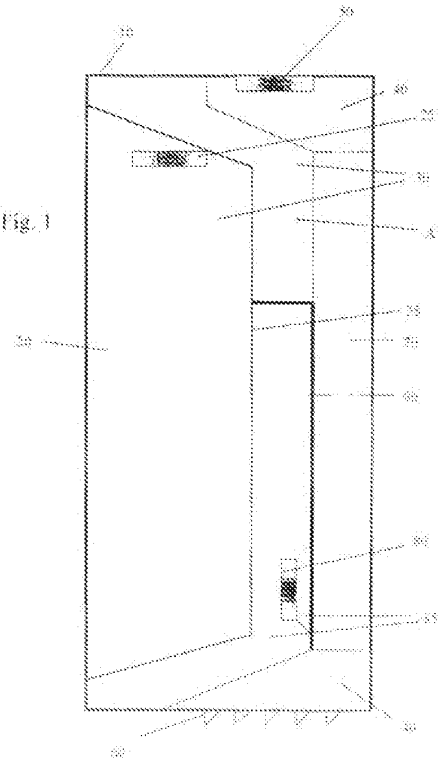

GB 2 402 205 A

This print incorporates corrections made under Section 117(1) of the Patents Act 1977.

Original Printed on Recycled Paper

SEC et al. v. MRI
SEC Exhibit 1020.0060
IPR2023-00255

Fig. 1

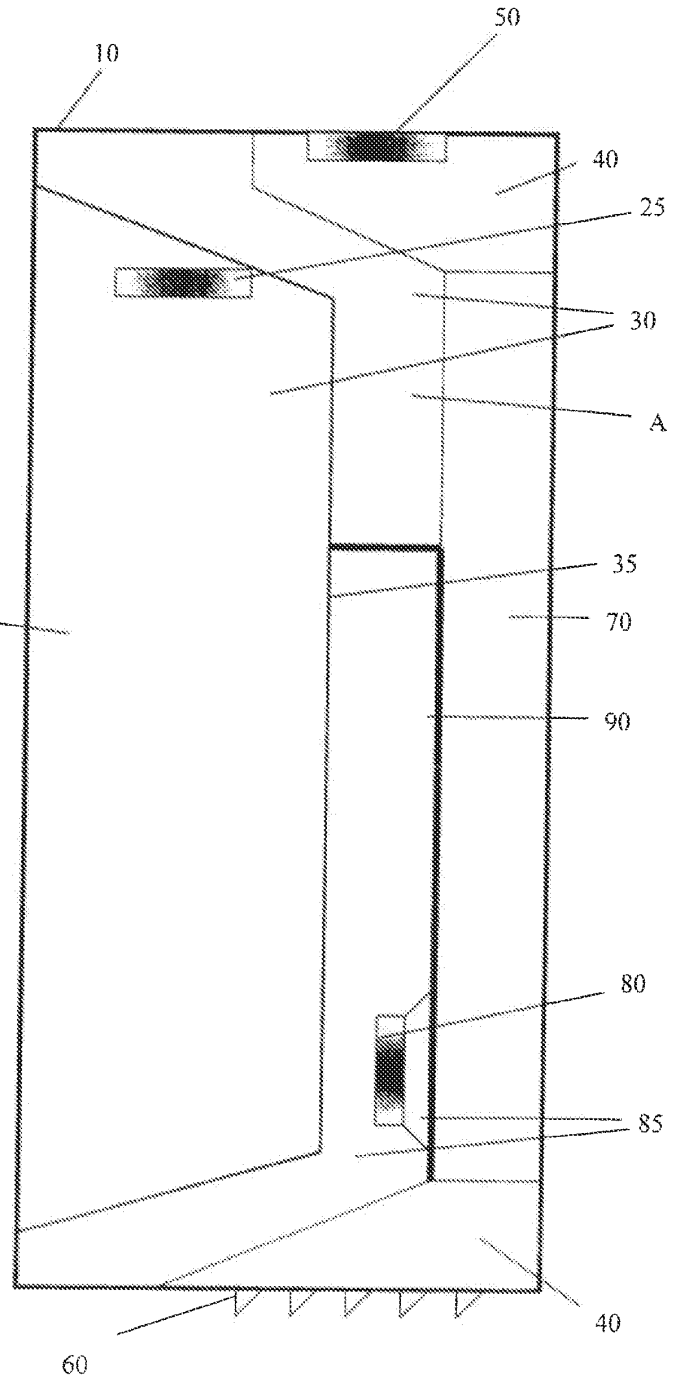

Fig 3

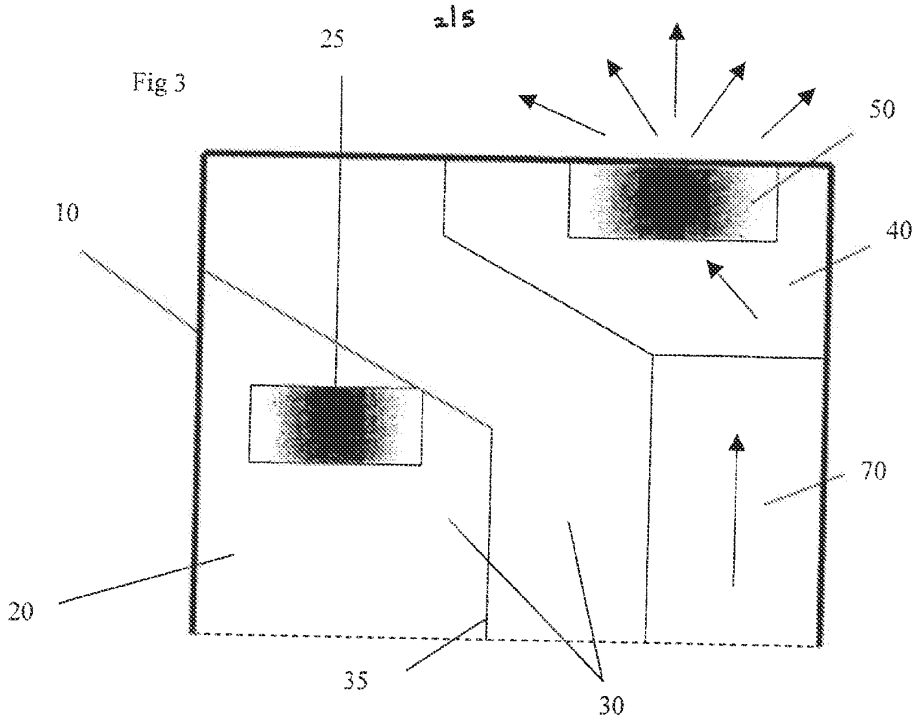

Fig 2

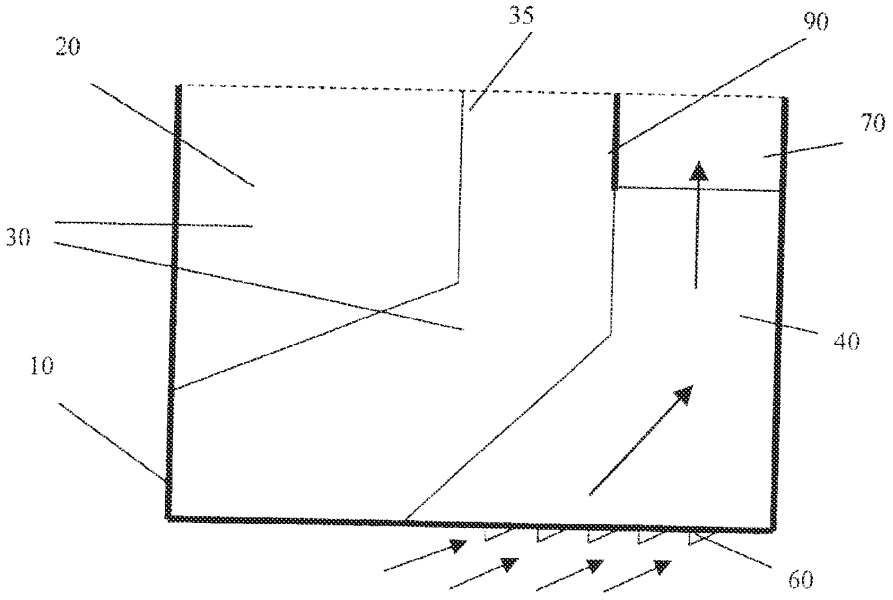

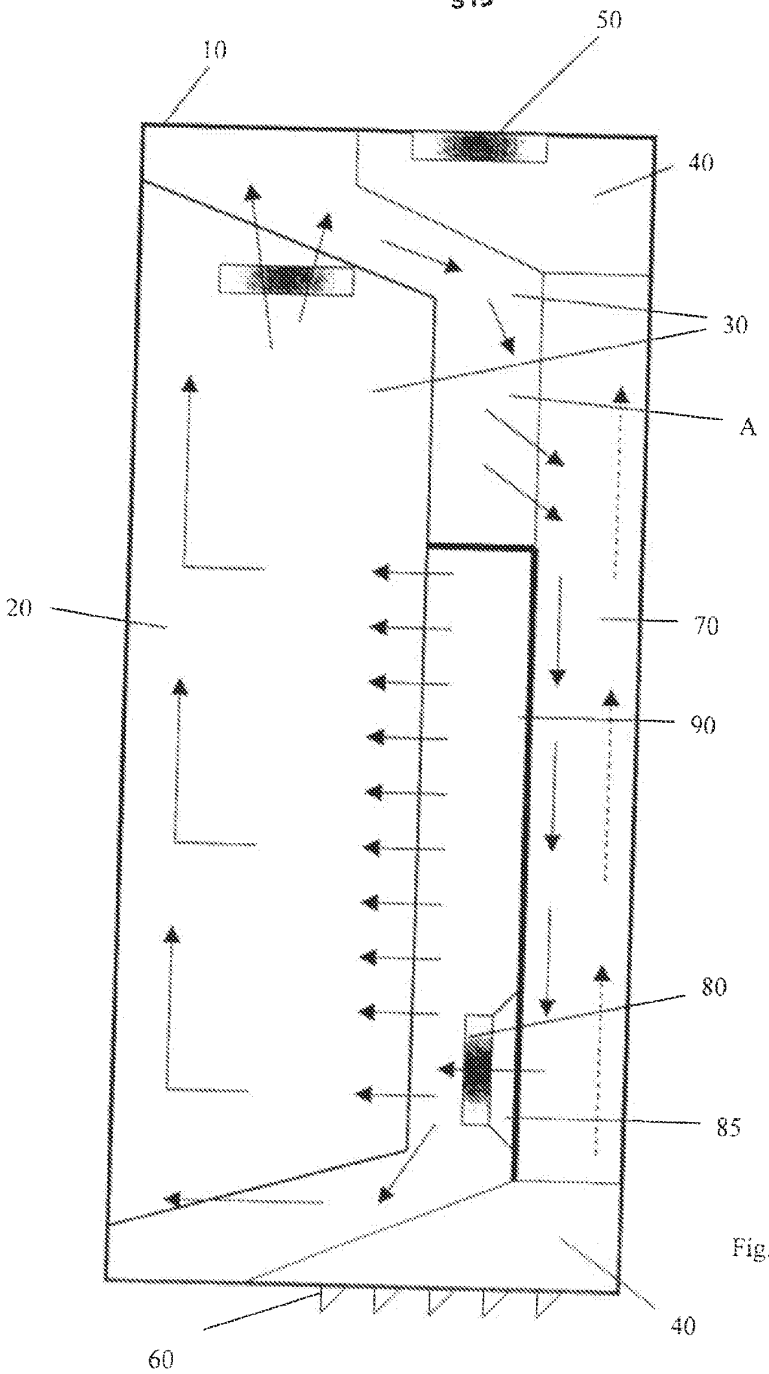

Fig. 4

Fig. 5

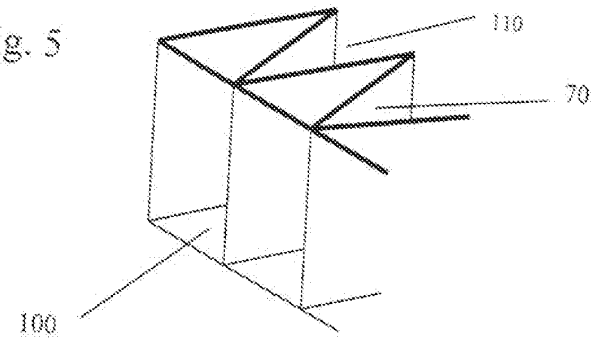

Fig 6

Display System Cabinet and Display System

Field of the Invention

The present invention relates to a cabinet for mounting a display system, the cabinet having improved cooling facilities and which is particularly suitable for use in providing large scale displays in public places.

Background to the Invention

Large scale electronic image and/or video display systems are used in many places, for example, to provide public information or display advertising materials. Such displays must have a size and resolution sufficient for information can be viewed from a distance.

In order to provide large display screens, plasma, LCD or rear projection technologies are commonly used. However, such screens can generate a lot of heat and it is therefore essential for them to have an efficient cooling system to remove the heat from the display in order for it to function normally.

Unfortunately, in many public places where there is a large quantity of human or vehicle traffic the cooling system can become clogged with dust, dirt and general pollution. In this situation, the cooling system becomes inefficient and may compromise the functionality of the display by causing it to overheat, resulting in temporary or permanent failure of the display system.

In order to address this problem, many display systems use filters at the interface between the cooling system and the external environment. However, filters eventually become clogged and inefficient and compromise the system and therefore require monitoring and/or changing regularly. Where the display system is mounted in an inaccessible location, as is often the case for such systems, this maintenance is particularly troublesome and is of annoyance to operators.

Summary of the Invention

According to one aspect of the present invention, there is provided a display cabinet comprising a substantially atmospherically sealed zone including means for mounting

a display system in the substantially atmospherically sealed zone and heat transfer means arranged to transfer heat out of the substantially atmospherically sealed zone.

The present invention seeks to provide a sealed display system having a cooling system that is substantially unaffected by pollution, dust or dirt in the atmosphere.

In a preferred embodiment, a zone of the cabinet containing the display system is sealed to the external environment. The sealed zone includes an internal cooling system that is not open to atmospheric air. Atmospheric air is drawn into a separate zone that allows heat to be exchanged between the two zones. Heat is then removed by expulsion of heated atmospheric air from the casing.

Advantageously, the lifetime of a display is increased due to elimination of ingress of dirt and the like into the display. In addition, the cooling system of the present invention is arranged to co-operate with existing internal cooling systems of the display to improve the effectiveness of the display's cooling system.

The display cabinet may further comprise an atmospheric zone, the heat transfer means being arranged to communicate heat from the substantially atmospherically sealed zone to the atmospheric zone.

The atmospheric zone may include air transfer means arranged to draw air from outside the cabinet and expel air in the atmospheric zone heated by the heat transfer means.

The air transfer means may include one or more fans.

The heat transfer means may comprise a heat exchanger.

The heat exchanger may comprise a corrugated heat conducting sheet having a first side in the substantially atmospherically sealed zone and a second side in the atmospheric zone.

SEC et al. v. MRI
SEC Exhibit 1020.0067
IPR2023-00255

The substantially atmospherically sealed zone may include air circulation means arranged to circulate air along the heat transfer means.

The air circulation means may include a baffle plate.

The substantially atmospherically sealed zone may include air pressurisation means arranged to project air within the atmospherically sealed zone into circulate air along the mounted display.

The air pressurisation means may include one or more fans.

The heat transfer means may include one or more of: a refrigeration unit, heat pipes, flat plates and a heat wheel, although it will be apparent that the heat transfer means may include other systems or methods.

The display cabinet may include a display system such as a plasma display, an LCD, a TFT display, a CRT display, a LED display, a projector or a rear projection display. It will be appreciated that any display could be used and the cabinet could also be adapted to cater for new technologies as and when necessary.

Brief Description of the Drawings

An example of the present invention will now be described in detail, by way of example only, with reference to the accompanying drawings in which:

Figure 1 is a crose section of a display system according to an embodiment of the present invention;

Figure 2, 3 and 4 are show parts of the cross section of Figure 1 in more detail;

Figure 5 is a perspective view of part of a heat exchanger suitable for use in the present invention; and,

Figure 6 is a cross section of part of the embodiment of Figure 1 along a line substantially perpendicular to the cross-section of Figure 1.

Detailed Description

Figure 1 is a cross section of a display system according to an embodiment of the present invention.

A cabinet 10 is arranged to contain a display 20 for displaying information, advertisements or other visual media. The display is sealed within the cabinet in a sealed zone 30. In operation, the components of the display 20 create heat inside the display 20 in the sealed zone 30. Vents and other venting means (not shown) allow air to travel through a rear portion 35 of the display 20, although the air is sealed within the sealed zone 30.

The cabinet 10 also includes an atmospheric air zone 40. Air from the outside of the cabinet 10 is drawn through vents 60 into the atmospheric air zone 40 by fans 50. The fans 50 draw the air up through the atmospheric air zone 40. The air is then expelled from the cabinet 10 through the fans 50. Arrows in figures 2 and 3 show the passage of air through the vents 60 into the atmospheric air zone 40 and out through the fans 50, respectively.

The cabinet 10 includes a heat exchanger 70 mounted on a baffle plate 90. Also mounted on the baffle plate 90 are fans 80. The sealed zone 30 and atmospheric air zone 40 are sealed from each other to prevent the passage of air, dirt and the like. The heat exchanger 70 is arranged to communicate heat between the sealed zone 30 ad the atmospheric zone 40.

Arrows in Figure 4 illustrate the movement of air in both the atmospheric air zone 40 and in the sealed zone 30 of the cabinet 10 in more detail. Dotted arrows show movement of air in the atmospheric air zone 40 whilst solid arrows show movement of air in the sealed zone 30.

Air is drawn through the atmospheric air zone 40 by fans 50. As the air is drawn through the atmospheric air zone 40 it passes across one or more surfaces of the heat exchanger 70. Similarly, air within the sealed zone 30 is drawn into the heat exchanger 70 behind the baffle plate 90 by the fans 80 at point A and passes across one or more other surfaces of the heat exchanger 70.

Air is circulated within the sealed zone 30 due to operation of the fans 80 within the cabinet and fans 25 within the display 20. Air coming into contact with hot components of the display 20 absorbs some of the heat. Due to operation of the fans 25 and 80 and orientation of the baffle plate 90, air within the sealed zone 30 is directed along one or more surfaces of the heat exchanger 70 around the baffle plate 90. Heat is transferred by the heat exchanger 70 from hot air in the sealed zone 30 to cooler atmospheric air within the atmospheric air zone 40. Heated air in the atmospheric air zone 40 is eventually ejected from the cabinet via exhausts in the fans 50.

The cooled air in the sealed zone is then forced through the fans 80 at the base of the heat exchanger 70 into a pressure zone 85.

As air is forced into the pressure zone 85, existing air in the pressure zone 85 is forced through vents in the rear portion 35 of the display 20. The air circulates around the display 20, aided by a standard internal cooling system of the display 20. In the illustrated embodiment, the internal cooling system includes the fans 25. The air is heated by hot components as it circulates, and is drawn upwards by the fans 25 within the display unit and blown out of the rear portion 35 for the cycle to continue.

The pressure zone 85 is created by forcing air into the zone using a bank of fans 80 at the base of the baffle plate 90. Due to the speed and number of the fans air is forced into the pressure zone more rapidly than it can escape elsewhere. In this manner, air is forced into the display 20 at a greater rate than is normally the case, thereby improving the efficiency of the display's own fans. As a result, more air passes through taking more heat away with it as it goes.

The baffle plate 90 on the side of the sealed zone 30 divides air expelled from the rear portion 35 of the display 20 and ensures air flows properly in the desired direction, along the heat exchanger towards the fans 80, allowing the pressure to be increased on one side of it.

In this manner, the sealed zone 30 is cooled without the ingress of atmospheric air.

Figure 5 is a perspective view of part of a heat exchanger suitable for use in the present invention.

In the illustrated embodiment of the present invention, the heat exchanger 70 is formed from corrugated metal, thereby increasing the surface area in contact with both the atmospheric air zone 40 and the sealed zone 30. The heat exchanger is sealed at the top and the bottom on the inner side to prevent atmospheric air 110 and the re-circulating air 100 within the sealed zone from mixing.

It will be apparent that other heat exchange arrangements or mechanisms could be used depending on the expected environment the product would be placed in. For example, the heat exchanger 70 could be: a refrigeration unit, heat pipes, flat plates, a heat wheel or one of the many other heat exchangers known.

The cooling process need not be in the form of air to air transfer of heat. For example, cooling could be via atmospheric air to another gas sealed within the sealed zone 30, air to a liquid (or air to liquid within heat pipes or the like to air), gas to a liquid, liquid to liquid etc.

The fans 80 are mounted to the baffle plate 90 which is in turn mounted to the heat exchanger 70. This assembly is then mounted within the cabinet 10 whilst allowing appropriate passage of air within the sealed zone 30 behind the baffle plate 90 into contact with the heat exchanger 70.

Figure 6 is a cross section of part of the embodiment of Figure 1 along a line substantially perpendicular to the cross-section of Figure 1.

Various forms of display system may be used, for example plasma, LCD, TFT, CRT, LED, rear projection or any similar technology.

The sealed zone may be created by use of gaskets formed from silicon, rubber, foam or the like.

The above-described embodiment significantly reduces the possibility of operational failure by removal of ingress of dirt and the like from the display system 20. In order to maintain full cooling effectiveness, intermittent cleaning of the vents 60 and fans 50 along with infrequent cleaning of the heat exchanger in the atmospheric zone 40 is suggested. Due to the design and configuration of the cabinet and components, it will be appreciated that these areas are much easier to clean than in prior systems facilitating reduced downtime and maintenance costs. Furthermore, separation of the display system 20 from dirt and the like results in a longer life for the display system and a more efficient heat transfer.

Thermal fuses may be provided in the atmospheric zone and in the sealed zone to disable the display system (and possibly fans) in the event that a predetermined temperature (for example 40°C) indicative of an air blockage in atmospheric zone, failure of the heat exchanger, fan failure, a fire or the like. Advantageously, since air within the sealed zone is limited, should a fire occur in the sealed zone, any smoke created would be contained and the fire should burn out very quickly due to lack of oxygen. Obviously if it is desired, the air within the sealed zone can be replenished or refreshed by opening and then resealing the sealed zone.

The fans 80 in the sealed zone are preferably temperature controlled and operate independently of the rest of the system.

SEC et al. v. MRI
SEC Exhibit 1020.0072
IPR2023-00255

Claims

1. A display cabinet comprising a substantially atmospherically sealed zone including means for mounting a display system in the substantially atmospherically sealed zone and heat transfer means arranged to transfer heat out of the substantially atmospherically sealed zone.

2. A display cabinet according to claim 1, further comprising an atmospheric zone, the heat transfer means being arranged to communicate heat from the substantially atmospherically sealed zone to the atmospheric zone.

3. A display cabinet according to claim 2, wherein the atmospheric zone includes air transfer means arranged to draw air from outside the cabinet and expel air in the atmospheric zone heated by the heat transfer means.

4. A display cabinet according to claim 3, wherein the air transfer means includes one or more fans.

5. A display cabinet according to any preceding claim, wherein the heat transfer means comprises a heat exchanger.

6. A display cabinet according to claim 5, wherein the heat exchanger comprises a corrugated heat conducting sheet having a first side in the substantially atmospherically sealed zone and a second side in the atmospheric zone.

7. A display cabinet according to any preceding claim, wherein the substantially atmospherically sealed zone includes air circulation means arranged to circulate air along the heat transfer means.

8. A display cabinet according to claim 7, wherein the air circulation means includes a baffle plate.

9. A display cabinet according to any preceding claim, wherein the substantially atmospherically sealed zone includes air pressurisation means arranged to project air within the atmospherically sealed zone into circulate air along the mounted display.

10. A display cabinet according to claim 9, wherein the air pressurisation means includes one or more fans.

11. A display cabinet according to any one of claims 1 to 5, wherein the heat transfer means includes one or more of: a refrigeration unit, heat pipes, flat plates and a heat wheel.

12. A display cabinet as claimed in any one of the preceding claims including a display system.

13. A display cabinet as claimed in claim 12, wherein the display system includes one or more of: a plasma display, an LCD, a TFT display, a CRT display, a LED display, a projector and a rear projection display.

14. A display cabinet as herein described and with reference to the accompanying drawings.

15. A display system as herein described and with reference to the accompanying drawings.

The Patent Office

INVESTOR IN PEOPLE

Application No: GB 0311575.5 **Examiner:** Brian A Woods
Claims searched: 1-14 **Date of search:** 14 November 2003

Patents Act 1977 : Search Report under Section 17

Documents considered to be relevant:

Category	Relevant to claims	Identity of document and passage or figure of particular relevance	
X	1-7,9-13	US 6474410	(MINICH) See whole document noting a sealed container for a display device, including a transparent viewing screen 16, a cooling fan 44 and a finned heat exchanger 46 in communication with the environment.
X	1 at least	CN 1110453	(CUI HANPING) See whole document noting sealed TV including heat pipe. Also see WPI abstract accession number 1997-373687 [35]
X	1 at least	JP 100042226	(FUKADA) See whole document noting airtight case having main body 1, liquid crystal screen 2a, heat exchanger 12, etc. Also see WPI abstract accession number 1998-186289 [17] .
X	1 at least	JP 090307257	(FUJITSU) See whole document noting a plasma screen 4 within an airtight case 1, and including a heat exchanger 6 and a refrigeration cooling system 8.
A		US 6039111	(DENSO) See whole document noting sealed enclosure and heat transfer means.
A		JP 060268388	(NIPPON) See whole document noting sealed enclosure and heat transfer means.

Categories:

X	Document indicating lack of novelty or inventive step	A	Document indicating technological background and/or state of the art.
Y	Document indicating lack of inventive step if combined with one or more other documents of same category.	P	Document published on or after the declared priority date but before the filing date of this invention.
&	Member of the same patent family	E	Patent document published on or after, but with priority date earlier than, the filing date of this application.

Field of Search:

Search of GB, EP, WO & US patent documents classified in the following areas of the UKC[1]:

F4H; F4U

Worldwide search of patent documents classified in the following areas of the IPC[2]:

SEC et al. v. MRI
SEC Exhibit 1020.0075
IPR2023-00255

The Patent Office

INVESTOR IN PEOPLE

Application No:	GB 0311575.5	**Examiner:**	Brian A Woods
Claims searched:	1-14	**Date of search:**	14 November 2003

A47F; F24F; F25B; F25D; F28B; F28C; F28D; F28F; H04N

The following online and other databases have been used in the preparation of this search report:

WPI; EPODOC; JAPIO; EPOQUE English Full TXTE;

SEC et al. v. MRI
SEC Exhibit 1020.0076
IPR2023-00255

(12) INTERNATIONAL APPLICATION PUBLISHED UNDER THE PATENT COOPERATION TREATY (PCT)

(19) World Intellectual Property Organization
International Bureau

(43) International Publication Date
25 August 2005 (25.08.2005)

PCT

(10) International Publication Number
WO 2005/079129 A1

(51) International Patent Classification⁷: H05K 7/20, G03B 21/16

(21) International Application Number: PCT/FI2005/000098

(22) International Filing Date: 14 February 2005 (14.02.2005)

(25) Filing Language: Finnish

(26) Publication Language: English

(30) Priority Data:
20040239 16 February 2004 (16.02.2004) FI

(71) Applicant (for all designated States except US): INSSI-MAINOS OY [FI/FI]; Parinpellontie 2 A 7, FI-16700 Helsinki (FI).

(72) Inventor; and
(75) Inventor/Applicant (for US only): VIITANEN, Juhani [FI/FI]; Parinpellontie 2 A 7, FI-16700 Helsinki (FI).

(74) Agent: JVP-PALVELU OY; Torkkatu 4, FI-05800 Hyvinkää (FI).

(81) Designated States (unless otherwise indicated, for every kind of national protection available): AE, AG, AL, AM, AT, AU, AZ, BA, BB, BG, BR, BW, BY, BZ, CA, CH, CN, CO, CR, CU, CZ, DE, DK, DM, DZ, EC, EE, EG, ES, FI, GB, GD, GE, GH, GM, HR, HU, ID, IL, IN, IS, JP, KE, KG, KP, KR, KZ, LC, LK, LR, LS, LT, LU, LV, MA, MD, MG, MK, MN, MW, MX, MZ, NA, NI, NO, NZ, OM, PG, PH, PL, PT, RO, RU, SC, SD, SE, SG, SK, SL, SY, TJ, TM, TN, TR, TT, TZ, UA, UG, US, UZ, VC, VN, YU, ZA, ZM, ZW.

(84) Designated States (unless otherwise indicated, for every kind of regional protection available): ARIPO (BW, GH, GM, KE, LS, MW, MZ, NA, SD, SL, SZ, TZ, UG, ZM, ZW), Eurasian (AM, AZ, BY, KG, KZ, MD, RU, TJ, TM), European (AT, BE, BG, CH, CY, CZ, DE, DK, EE, ES, FI, FR, GB, GR, HU, IE, IS, IT, LT, LU, MC, NL, PL, PT, RO,

[Continued on next page]

(54) Title: PROCEDURE AND APPARATUS FOR CONTROLLING THE TEMPERATURE OF A DISPLAY SURFACE

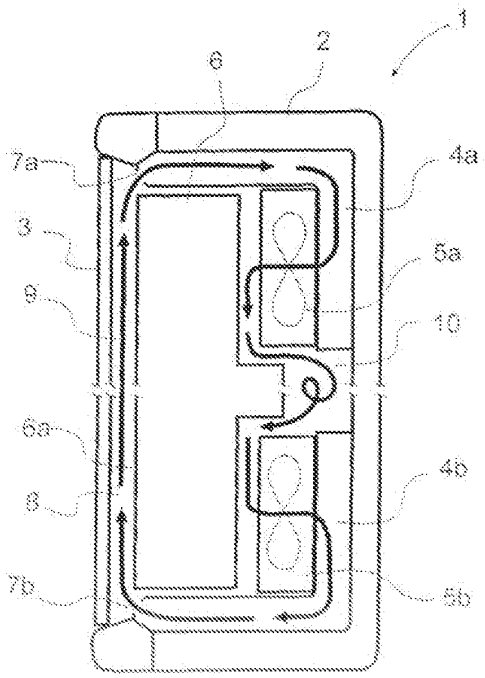

(57) Abstract: The invention relates to a procedure and an apparatus for controlling the temperature of the display surface (6a) of an encapsulated display device (6). The display device is placed in a casing (1) provided with a transparent protecting element (3), in which casing a medium, such as air, is circulated. According to the invention, the flow of the circulated air stream (9) is equalized and after the equalization the air stream is caused to flow along the display surface (6a) of the display device (6) over the display surface (6a).

WO 2005/079129 A1

SEC et al. v. MRI
SEC Exhibit 1020.0078
IPR2023-00255

SE, SI, SK, TR), OAPI (BF, BJ, CF, CG, CI, CM, GA, GN, GQ, GW, ML, MR, NE, SN, TD, TG).

Published:

- *with international search report*
- *before the expiration of the time limit for amending the claims and to be republished in the event of receipt of amendments*

For two-letter codes and other abbreviations, refer to the "Guidance Notes on Codes and Abbreviations" appearing at the beginning of each regular issue of the PCT Gazette.

SEC et al. v. MRI
SEC Exhibit 1020.0079
IPR2023-00255

PROCEDURE AND APPARATUS FOR CONTROLLING THE TEMPERATURE OF A DISPLAY SURFACE

The present invention relates to a procedure as defined in the preamble of claim 1 and an apparatus as defined in the preamble of claim 5 for controlling the temperature of a display surface.

The procedure and apparatus of the invention, which are hereinafter also referred to by the common designation "solution of the invention", is particularly well applicable for use for controlling the display surface of electric displays, such as TFT, LCD, plasma or similar display devices, either by cooling, heating or in some cases even drying the display surface. This type of electric displays are also referred to as digital displays.

Aforesaid displays provided with a digital display surface have been mainly used in indoor spaces, which is why they have generally been non-encapsulated. The display surface of the display has therefore been in direct contact with ambient air, and consequently it has been impossible to control the temperature of the display surface accurately enough. Still, this type of displays generally work without major problems in indoor spaces because the air circulation rate is sufficiently high to prevent the display surface from becoming overheated. However, as displays used for different purposes have been gaining ground, there has arisen the problem that a bare display surface can not be left exposed to touch by people. Such exposure may lead to damage of the display surface in consequence of vandalism or otherwise due to the surface being accidentally touched with excessive force. For this reason, a display surface that is exposed to touch by people has to be protected with a pane of glass, plastic or equivalent placed in front of the display surface. Often it is also necessary to encapsulate the entire display. However, such encapsulation and protective plate in front of the display surface easily cause overheating of the display surface, which is due to the display's own heat pro-

SEC et al. v. MRI
SEC Exhibit 1020.0080
IPR2023-00255

duction, the sun or other external heat sources or the combined effect of these. Overheating may reduce the service life of the display if it e.g. causes local damage to the display, or overheating may damage the whole display beyond repair.

Due to the difficult control of temperature of the display surface, it has been difficult to use aforesaid electric displays outdoors where the display surface is more readily exposed e.g. to direct sunshine, which might cause excessive heating of the display surface. Besides, bright sunshine affects the visibility of the display surface. In bright illumination and in sunshine, the display's own brightness has to be increased, and consequently the additional power needed to form the image and increase the contrast produces a higher surface temperature of the display, thus heating the display surface further. Likewise, when used outdoors the display surface may be exposed to other extreme conditions, e.g. rain or low temperatures, in which aforesaid electric displays do not necessarily work without a heating arrangement.

In prior art, international patent application no. WO 01/99482, among others, discloses a solution for cooling an encapsulated electric display. However, the solution according to this WO specification concentrates on cooling the components located in the rear part of the display casing and on cooling the rear part of the plasma display, as is stated on lines 1-10 on page 2 of the WO specification. In addition, from Fig. 2A and 2C of the WO specification we can clearly see that the display surface 21a is outside the casing and the cooling air gap E is on the opposite side of the casing, behind the display 21. Although the display is encapsulated, the display surface in this solution, too, is in direct contact with ambient air, so it is not possible to reliably implement control of the temperature of the display surface, and the display surface is exposed to vandalism and damage from being touched.

Previously known is also a solution as disclosed in British patent application no. GB2357178 for controlling the temperature of a plasma display in a case where the plasma display is enclosed in a hermetic casing provided with a transparent front plate to prevent disturbances caused by dust and other particles present in the air. In the solution according to this GB application, the cooling air is taken through filters directly from the external air surrounding the casing and returned after the cooling function from the casing directly back into the space outside the casing. Therefore, controlling the temperature of the air taken from outside the casing may prove difficult because the temperature of the air may change even very quickly e.g. when the sun emerges from behind a cloud and heats the air. Likewise, displays used outdoors are exposed to large temperature differences in different seasons, and therefore correct control of temperature is difficult. Moreover, in the solution according to the GB application, the air stream is blown into a gap 26 behind the display panel, between the display panel 13 and an auxiliary panel 12 behind the display panel, and not into the gap between the transparent front plate 14 and the actual display surface. Consequently, control of the temperature of the display surface itself is not as fast and efficient as it could be. Besides, in the solution according to the GB application, the air stream is not equalized in any way, so the air stream may be different in respect of cooling/heating power in different parts of the display. In difficult conditions this may result in damage e.g. to a part of the display surface.

Thus, both non-encapsulated displays and partially or completely encapsulated displays still have the common drawback that no reliable arrangement for controlling the temperature of the display surface has been achieved, and consequently the use of electric displays is restricted.

SEC et al. v. MRI
SEC Exhibit 1020.0082
IPR2023-00255

The object of the present invention is to overcome the above-mentioned drawbacks and to achieve a simple and reliable procedure and apparatus for controlling the temperature of the display surface of an electric display, in which solution the display surface of a display placed in a casing can be provided with a protective glass pane or equivalent. A further object is to achieve a procedure and apparatus that will enable the use of an electric display for many different purposes and in many different places of application. The procedure of the invention is characterized by what is disclosed in the characterization part of claim 1. Correspondingly, the apparatus of the invention is characterized by what is disclosed in the characterization part of claim 5. Other embodiments of the invention are characterized by what is disclosed in the other claims.

The solution of the invention has the advantage that, being completely encapsulated, the display device, in more simple terms the display withstands all kinds of external conditions, including exceptional situations, whether caused by weather or man. An additional advantage is that the encapsulated construction with the display surface placed inside a casing enables the control of the temperature of the display surface to be reliably implemented so that the limit temperature values specified by the manufacturer will not be exceeded under any circumstances at any point of the display surface. The advantages resulting from this include a longer service life of the display and more versatile possibilities of use of the display than at present. The display can be used both indoors and outdoors and also at a close distance from spectators as the display surface is protected against touch. A further advantage is that the casing of the display can be easily provided with a cooling system, allowing a display provided with the solution of the invention to be safely used even in reasonably hot outdoor conditions. An additional advantage is good sound insulation of the fans used, because the fans producing the air streams are placed as far away from the front edges of the air ducts opening in

the spectator's direction, so that the fan noise carried by the air stream travels through as long a distance in the air duct as possible. Yet another advantage is that the closed box-type structure also protects the display from dust, sand, water and other harmful materials. A further advantage is that, as a constant dynamic pressure is maintained over the entire width of the display surface, the velocity of the flow of circulated air can be equalized over the entire width of the display surface, so a sufficiently even flow velocity is achieved even in the display surface edge areas having the greatest flow resistance.

In the following, the invention will be described in detail with reference to an embodiment example and the attached drawing, wherein

Fig. 1	presents a technical solution according to the invention in simplified and diagrammatic form in side view,
Fig. 2	presents a technical solution according to the invention in simplified and diagrammatic form in top view, and
Fig. 3	presents a technical solution according to the invention in simplified and diagrammatic form in front view.

To provide an understanding of the solution of the invention, first a technical solution implementing the procedure of the invention for controlling the temperature of the display surface of an electric display will be described. Fig. 1 presents a simplified and diagrammatic cross-sectional side view of a casing 1 according to the invention. An arrow pattern 9 represents the circulating air stream used to control the temperature of the display surface 6a. The casing structure comprises e.g. a thermally insulated envelope 2, which has an open front provided with a transparent protecting element 3, such as a glass or plastic plate or a corresponding transparent structure. The envelope 2 and the pro-

SEC et al. v. MRI
SEC Exhibit 1020.0084
IPR2023-00255

tecting element 3 together form a substantially closed and substantially watertight and airtight casing structure, inside which a display device 6, i.e. a display provided with a display surface 6a can be mounted.

Provided in the upper part of the envelope 2 is an air duct 4a of a width covering substantially the entire interior width of the envelope 2, which air duct forms a hollow structure with an L-shaped cross-sectional profile such that a first branch of the L-profile is substantially parallel to the interior upper surface, i.e. ceiling of the envelope and adjoins the ceiling of the envelope 2 while a second branch of the L-profile is substantially parallel to the interior rear surface, i.e. back wall of the envelope 2 and adjoins the inner surface of the back wall of the envelope. In the lower part of the envelope 2 is an air duct 4b corresponding to air duct 4a and placed in an upside-down position with respect to air duct 4a and adjoining in a corresponding manner both the back wall of the envelope 2 and the interior bottom surface of the envelope 2. The front edges of the first branches of the air ducts 4a and 4b, i.e. the branches at the ceiling and bottom surfaces of the envelope 2 extend to the front part of the envelope 2, close to the rear surface of the protecting element 3.

The air duct 4a in the upper part of the is provided with at least one fan 5a, which sucks air used for controlling the temperature of the display surface 6a from the air duct 4a and blows the air further into a space 10 in the rear part of the envelope 2, which may contain e.g. display components producing turbulence in the circulated air stream. The fan 5a is secured to the second branch of air duct 4a, i.e. to the branch adjoining the rear wall, close to the space 10 in the rear part. Similarly, air duct 4b is provided with a fan 5b secured to the second branch of the air duct, i.e. to the branch adjoining the rear wall. The fan 5b sucks air from the space 10 in the rear part of the envelope 2 into air

SEC et al. v. MRI
SEC Exhibit 1020.0085
IPR2023-00255

duct 4b and blows it further through the air duct 4b towards the front part of the envelope 2.

The front part of the air duct 4b in the lower part of the envelope 2 is provided with a throttle element 7b, such as an air gap or equivalent, throttling the circulated air stream and having a width substantially covering at least the entire display surface 6a, the effective cross-sectional area of the throttle element being smaller than the effective cross-sectional area of air duct 4b after fan 5b. Correspondingly, the front part of the air duct 4a in the upper part of the envelope 2 is provided with an exhaust element 7a, such as an air gap or equivalent, for the exhaust of the circulated air stream, said exhaust element having a width at least substantially equal to the entire width of the display surface 6a and an effective cross-sectional area at least equal to the effective cross-sectional area of the throttle element 7b.

The display device 6 is so placed inside the envelope 2 that between the display surface 6a and the protecting element 3 there remains an air gap 8 having a substantially uniform width and oriented in a direction parallel to the plane of the display surface 6a, in which air gap the circulated air stream 9 produced by the fans 5a and 5b has been fitted to rise along the surface of the display surface 6a from the lower part of the envelope 2 to its upper part to control the temperature of the display surface 6a.

Fig. 2 correspondingly presents a simplified and diagrammatic cross-sectional top view of the casing structure 1 of the invention. The arrow pattern 13 indicates the path of the cooling replacement air in the casing structure 1 of the invention. Placed on each interior side surface, i.e. side wall of the envelope 2 has a hollow air duct 11a and 11b of L-shaped cross-sectional profile substantially corresponding to air ducts 4a, 4b. The first branch of the air ducts 11a, 11b adjoins the side wall of the envelope 2 and the second

branch adjoins the rear wall of the envelope 2. Air ducts 11a and 11b are mitred with air ducts 4a and 4b and fastened at the mitre to air ducts 4a and 4b, so that the four air ducts together form a structure resembling a picture frame. The hollow interiors of air ducts 4a and 4b are mechanically insulated from the corresponding interiors of air ducts 11a and 11b either at or near the mitre to separate the air streams circulating in the air ducts from each other.

The vertical front side of the envelope 2 is provided with one or more air intake openings 14a communicating with the opening at the front edge of air duct 11a. Air duct 11a is provided with at least one fan 12a, which sucks replacement air into the air duct from outside the of the envelope 2 through the intake opening 14a and blows the air further into the space 10 in the rear part of the envelope 2, where the replacement air stream 13 is mixed with the circulated air stream 9, cooling, heating or drying the circulated air as necessary. In the labyrinthine structure of the space 10 in the rear part, the replacement air is well mixed with the circulated air, so that the temperature of the circulated air is rendered as even as possible. The fan 12a is fastened to the second branch of air duct 11a, i.e. to the branch adjoining the rear wall, close to the space 10 in the rear part. Similarly, air duct 11b is provided with a fan 12b attached to the second branch of the air duct, i.e. to the branch adjoining the rear wall, which sucks air from the space 10 in the rear part of the envelope 2 into air duct 11b and blows it further through the air duct 11b out of the envelope via one or more exhaust openings 14b provided in the vertical front side of the envelope. As the air intake and exhaust openings 14a, 14b are located in the front side of the envelope, the display casing can even be embedded in a wall or a corresponding mounting surface.

Fig. 3 presents a simplified and diagrammatic cross-sectional front view of the casing structure 1 of the invention. For the sake of clarity, the figure only shows the

SEC et al. v. MRI
SEC Exhibit 1020.0087
IPR2023-00255

circulation air 9 flowing upwards along the front side of the display surface 6a of the display device 6. Correspondingly, behind the display device 6 the circulation air 9 flows downwards, as can be seen from Fig. 1. The replacement air stream 13 mainly separated from the circulated air stream 9 is sucked via fan 12a into the space 10 in the rear part, circulated in a substantially horizontal direction and blown out of the casing 1 via fan 12b. Thus, the display surface 6a is never directly exposed to raw air from outside the casing but only to air mixed in the circulated air stream 9. This results in easier and better filtering of the air used to control the temperature of the display surface 6a.

In the casing structure 1 of the invention, the circulating air stream 9 produced by one or more fans 5b creates an overpressure in the lower part of the of air duct 4b, because the cross-section of the throttle element 7b in the fore part of the air duct 4b is smaller than the cross-section of the air duct 4b. The result of this is that the pressure is equalized in the throttle element 7b and the circulating air stream is evenly distributed over the entire width of the throttle element 7b, and therefore a substantially smooth circulated air stream 9 of uniform temperature is flowing at the same velocity through the throttle element 7b, rising upwards in the gap 8 along the display surface 6a of the display device 6.

By means of the circulating air stream 9, the temperature of all pixels on the display surface 6a is controlled by supplying circulation air at a temperature as required in each situation to the display surface 6a at least over the entire width of the display surface and at a sufficiently high flow rate. Placed in the upper part of the air gap 8 and the display surface 6a are one or more temperature sensors, by means of which a correct temperature of the circulating air is maintained. Generally a temperature adjustment of the circulating air stream 9 effected by using the replacement

air stream 13 is sufficient. To prepare the casing 1 for difficult conditions, it can be provided with one or more heating elements to heat the circulating air when necessary on the basis of the information obtained from the temperature sensors. Similarly, the casing 1 can be provided with one or more cooling elements to cool the circulating air when necessary on the basis of the information obtained from the temperature sensors if the cooling effected by using the replacement air stream 13 is insufficient. In addition, the apparatus comprises controlling and adjusting elements for keeping the circulating air stream 9 at a correct temperature or within correct temperature limits. For the sake of clarity, the figures do not show the temperature sensors, heating elements, cooling elements and controlling and adjusting elements.

According to the procedure of the invention, the control of the temperature of the display surface 6a of a display device 6 is implemented e.g. as follows: In the procedure, a circulating air stream 9 is circulated inside a substantially closed casing structure 1 by blowing circulation air by means of a fan 5b into an air duct 4b and throttling the flow of the circulation air 9 away from the air duct 4b by means of a throttle element 7b so as to create in the air duct 4b an overpressure equalizing the circulating air stream 9. The overpressurized circulating air stream 9 is passed further via the throttle element 7b at an even flow rate along the display surface 6a of the display device 6 substantially upwards in an air gap 8 between the display surface 6a and a protecting element 3 placed in front of the display surface 6a, at least over the entire width of the display surface 6a. From the air gap 8, the circulating air stream 9 is passed further via an exhaust element 7a into an air duct 4a from which the circulating air stream 9 is sucked by a fan 5a into a space 10 in the envelope 2 behind the display device 6, in which space the circulation air is mixed at least when necessary with replacement air sucked into the envelope 2 from outside the envelope 2 via an air

duct 11a by means of a fan 12a to keep the circulating air stream at a desired temperature or within desired temperature limits.

In addition, the circulation and replacement air is used for cooling display device components placed in the space 10 in the rear part. When necessary, the circulating air stream is cooled or heated by means of a separate cooling and/or heating element. The replacement air stream 13 is partially mixed with the circulating air stream 9 and passed out of the envelope 2 via a fan 12b and an air duct 11b. In addition, the circulating air stream 9 and the replacement air stream 13 are prevented form being mixed with each other except in the space 10 in the rear part of the envelope 2 behind the display device 6.

It is obvious to the person skilled in the art that the invention is not limited to the embodiments described above but that it may be varied within the scope of the claims presented below. Thus, for example, the structure of the envelope and the structure and number of the air ducts may differ from those described above. Likewise, the placement and number of fans may vary. Similarly, it is obvious that the intake and exhaust of replacement air as well as the circulation as a whole may be implemented in ways differing from those described above. For example, the replacement air can be taken from the side of or from behind the casing, and it can also be exhausted to the side of and behind the casing. The replacement air can also be taken into the casing or exhausted from the casing at a point near an area containing components that require e.g. special cooling. If necessary, the replacement air can also be taken in and exhausted from the same side of the casing.

It is also obvious to the person skilled in the art that the elongated opening presented above as a throttle element may also consist of a series of smaller apertures or holes, which may be disposed in more than one row. The essential

point is that the throttle element or equivalent is used to equalize the pressure of the circulating air stream in the air duct and thus to distribute the entire circulating air stream over the entire width of the display surface. It is also obvious that, instead of consisting of aforesaid apertures or holes, the throttle element may also be formed e.g. directly on the basis of the mutual positions and shape of the display device, protecting element and fore part of the air duct. It is likewise obvious to the person skilled in the art that, instead of throttle elements of fixed shape and size, the opening of the throttle element may be adjustable.

It is further obvious to the person skilled in the art that the pressure, velocity or equivalent of the air stream before it flows onto the display surface 6a can also be equalized without an actual throttle part reducing the cross-sectional area of air duct 5b. In this case, using a high power with fan 4b, in the air duct 5b after the fan 4b a pressure is created that has a magnitude such that the whole air duct forms a kind of throttle functioning as an equalizing element and the pressure as well as the rate of flow are equalized before the air stream reaches the lower edge of the display surface 6a. In this case, air duct 5b may have a substantially constant cross-sectional area throughout its length.

It is additionally obvious to the person skilled in the art that the air intake opening 14a at least for the replacement air stream 13 may be provided with a filter to prevent dust and other small particles present in the air from getting into the replacement air stream 13.

It is further obvious that, instead of being formed from plate-like structural elements, the air ducts may also be formed by the components and other structural parts of the apparatus.

CLAIMS

1. A procedure for controlling the temperature of the display surface (6a) of an encapsulated display device (6), in which procedure the display device is placed inside a casing (1) provided with a transparent protecting element (3), and in which procedure a medium, such as air, is circulated in the casing (1), **characterized** in that the flow of the circulated air stream (9) is equalized and after the equalization the air stream (9) is caused to flow along the display surface (6a) of the display device (6) over the display surface (6a).

2. A procedure according to claim 1, **characterized** in that circulated air stream (9) is throttled to equalize the air stream by means of a throttle element (7b) placed below the display surface (6a), whereupon the air stream (9) is passed over the display surface (6a) through an air gap (8) between the display surface (6a) and the transparent protecting element (3) in front of the display surface (6a).

3. A procedure according to claim 1 or 2, **characterized** in that the circulated air stream (9) is passed after the display surface (6a) via an air duct (4a) provided inside the casing (1) into a space (10) in the rear part of the casing (1), in which space the circulated air stream (9) is mixed if necessary with replacement air taken from outside the casing (1), after which space (10) the circulated air stream (9) is passed again through an air duct (4b) provided inside the casing (1) via the throttle element (7b) into the air gap (8) and over the display surface (6a).

4. A procedure according to claim 1, 2 or 3, **characterized** in that the temperature of the circulated air stream (9) is monitored by means of temperature sensors and, when necessary, the circulated air stream (9) is either heated or cooled by means of a separate heating or cooling element.

5. An apparatus for controlling the temperature of the display surface (6a) of an encapsulated display device (6), in which apparatus the display device (6) is placed inside a casing (1) provided with a transparent protecting element (3), and which apparatus is provided with at least one fan (5b) for circulating a medium, such as air, in the casing (1), **characterized** in that the apparatus is provided with at least one element for equalizing the circulated air stream (9), which equalizing element, as seen in the direction of the circulated air stream (9), is placed between the fan (5b) and the display surface (6a).

6. An apparatus according to claim 5, **characterized** in that the apparatus is provided with at least one throttle element (7b) functioning as an equalizing element, which, as seen in the direction of the circulated air stream (9), is placed between the fan (5b) and the display surface (6a).

7. An apparatus according to claim 6, **characterized** in that the throttle element (7b) is placed in the casing and that the throttle element (7b) is an elongated opening of a length at least corresponding to the width of the display surface (6a), the cross-sectional area of said opening being smaller than the cross-sectional area of the air duct (4b) between the fan (5b) and the opening.

8. An apparatus according to claim 5, 6 or 7, **characterized** in that the front wall of the casing (1) consists of a transparent protecting element (3) placed at a horizontal distance from the display surface (6a) of the display device (6) so that the protecting element (3) and the display surface (6a) have an air gap (8) between them through which the circulated air stream (9) is passed over the display surface (6a).

9. An apparatus according to any one of the preceding claims 5-8, **characterized** in that, in addition to the aforesaid components, the casing (1) is provided with at least an ap-

SEC et al. v. MRI
SEC Exhibit 1020.0093
IPR2023-00255

erture-like exhaust element (7a) for exhausting the circulated air stream, an air duct (4a) and a fan (5a) for passing the circulated air stream (9) over the display surface (6a) as a smooth flow inside the casing (1).

10. An apparatus according to any one of the preceding claims 5-9, **characterized** in that the apparatus is provided with air ducts (11a, 11b) and fans (12a, 12b) connected to the air ducts (11a, 11b) for taking in replacement air from outside the casing (1) and mixing it with the circulated air stream (9) in the space (10) in the rear part of the casing and for exhausting it from the casing (1) after the mixing, and that the air ducts (4a, 4b) guiding the circulated air stream (9) are mechanically separated from the air ducts (11a, 11b) guiding the replacement air stream (13).

SEC et al. v. MRI
SEC Exhibit 1020.0094
IPR2023-00255

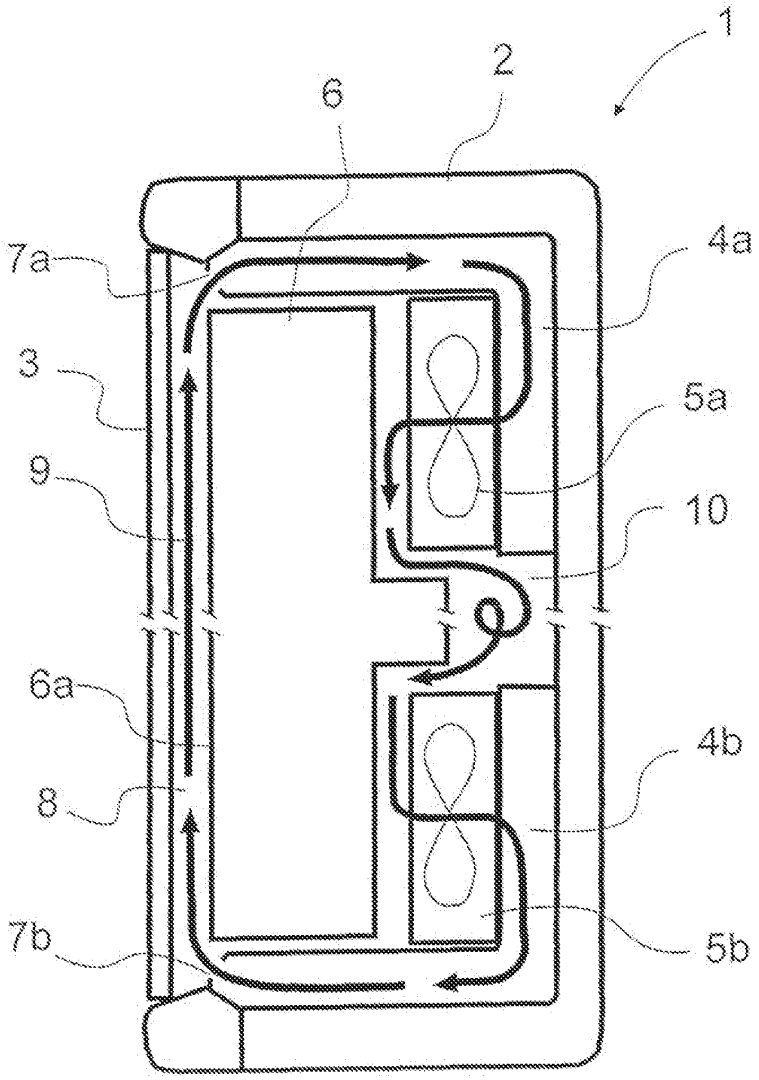

Fig. 1

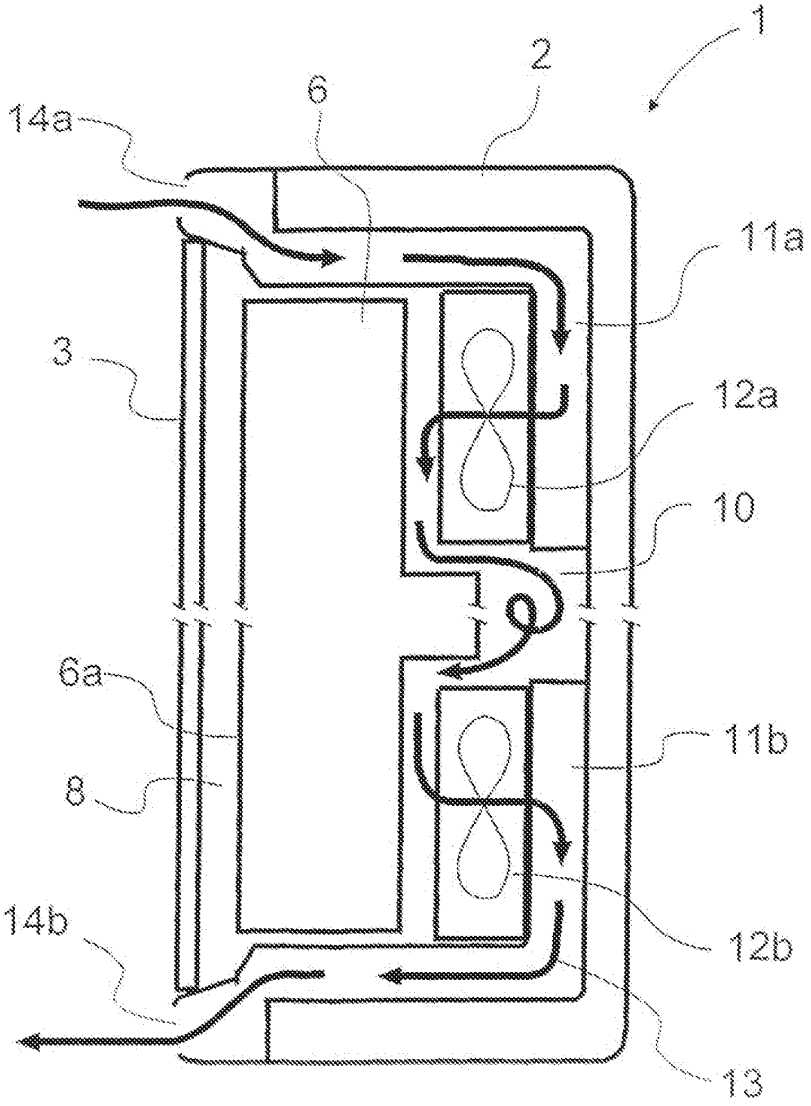

Fig. 2

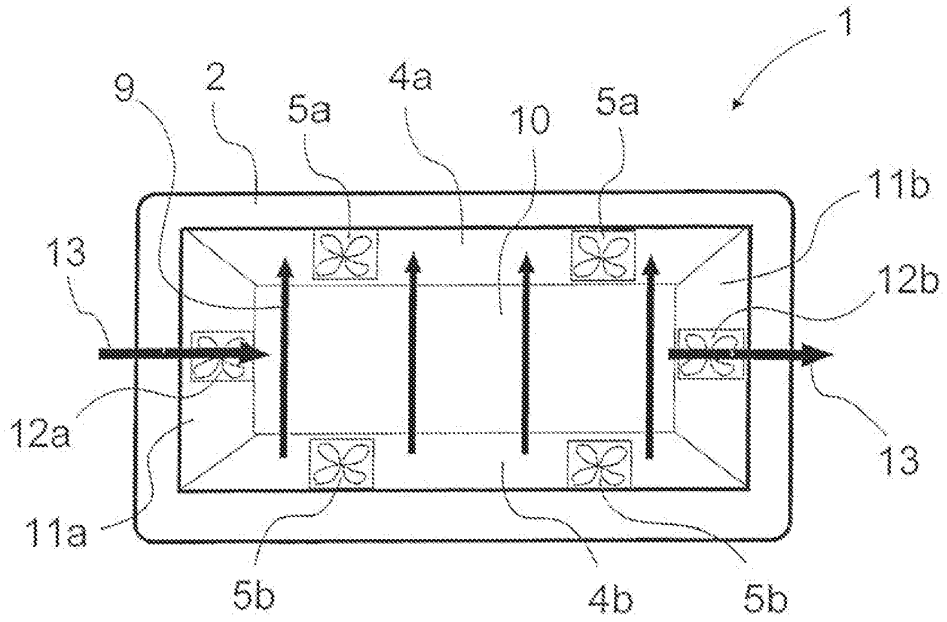

Fig. 3

INTERNATIONAL SEARCH REPORT

International application No.
PCT/FI 2005/000098

A. CLASSIFICATION OF SUBJECT MATTER

IPC7: H05K 7/20, G03B 21/16
According to International Patent Classification (IPC) or to both national classification and IPC

B. FIELDS SEARCHED

Minimum documentation searched (classification system followed by classification symbols)

IPC7: G09F, H05K, G03B

Documentation searched other than minimum documentation to the extent that such documents are included in the fields searched

SE,DK,FI,NO classes as above

Electronic data base consulted during the international search (name of data base and, where practicable, search terms used)

EPO-INTERNAL, WPI DATA, PAJ

C. DOCUMENTS CONSIDERED TO BE RELEVANT

Category*	Citation of document, with indication, where appropriate, of the relevant passages	Relevant to claim No.
X	US 5991153 A (GREGORY S. HEADY ET AL), 23 November 1999 (23.11.1999), column 8, line 9 - line 21, figure 2, abstract --	1,2,5-9
A	US 6226180 B1 (AKIRA UEDA ET AL), 1 May 2001 (01.05.2001), figure 18 --	1-10
A	DE 20018447 U1 (OPTOMA CORP), 22 February 2001 (22.02.2001), figure 1 -- --------	1-10

☐ Further documents are listed in the continuation of Box C. ☒ See patent family annex.

* Special categories of cited documents:
"A" document defining the general state of the art which is not considered to be of particular relevance
"E" earlier application or patent but published on or after the international filing date
"L" document which may throw doubts on priority claim(s) or which is cited to establish the publication date of another citation or other special reason (as specified)
"O" document referring to an oral disclosure, use, exhibition or other means
"P" document published prior to the international filing date but later than the priority date claimed
"T" later document published after the international filing date or priority date and not in conflict with the application but cited to understand the principle or theory underlying the invention
"X" document of particular relevance; the claimed invention cannot be considered novel or cannot be considered to involve an inventive step when the document is taken alone
"Y" document of particular relevance; the claimed invention cannot be considered to involve an inventive step when the document is combined with one or more other such documents, such combination being obvious to a person skilled in the art
"&" document member of the same patent family

Date of the actual completion of the international search	Date of mailing of the international search report
14 July 2005	18 -07- 2005
Name and mailing address of the ISA/ Swedish Patent Office Box 5055, S-102 42 STOCKHOLM Facsimile No. +46 8 666 02 86	Authorized officer Erik Miliander/MN Telephone No. +46 8 782 25 00

Form PCT/ISA/210 (second sheet) (April 2005)

INTERNATIONAL SEARCH REPORT

Information on patent family members

28/05/2005

International application No.
PCT/FI 2005/000098

US	5991153	A	23/11/1999	NONE			
US	6226180	B1	01/05/2001	JP	3251180	B	28/01/2002
				JP	10116137	A	06/05/1998
				US	6385043	B	07/05/2002
				US	6469892	B	22/10/2002
				US	6507493	B	14/01/2003
				US	6717808	B	06/04/2004
				US	20010010623	A	02/08/2001
				US	20010017762	A	30/08/2001
				US	20010050840	A	13/12/2001
DE	20018447	U1	22/02/2001	JP	2002043780	A	08/02/2002
				TW	427511	Y	00/00/0000

SEC et al. v. MRI
SEC Exhibit 1020.0099
IPR2023-00255

LIQUID CRYSTAL DISPLAY DEVICE

Publication number: JP3153212 (A)
Publication date: 1991-07-01
Inventor(s): KOBAYASHI SHICHIRO; SEKI TERUO; AOYAMA NAOFUMI; SAKUMA TOSHIYUKI
Applicant(s): HITACHI LTD
Classification:
- international: ***G02F1/1333; G02F1/1345;*** *G02F1/13;* **G02F1/13;** (IPC1-7): G02F1/1333; G02F1/1345
- European:
Application number: JP19890291285 19891110
Priority number(s): JP19890291285 19891110

Abstract of **JP 3153212 (A)**

PURPOSE:To sufficiently take an EMI countermeasure by forming a transparent conductive film which is connected to a metallic shielding case and the earth pattern of a driving circuit board over the nearly entire surface of a transparent substrate on the side of the screen side of a liquid crystal display part(LCD). CONSTITUTION:The transparent conductive film 7 is formed on the nearly entire surface of the transparent substrate of an LCD 4 for compensation ar ranged on the display side of a display LCD 1, and this transparent conductive film 7 is connected electrically in the path of conductive rubber 8, the metallic shielding case 2, the earth pattern 5 of PCB, and an external earth in order. The earth level is held on the screen of the LCD, so the entire screen of the LCD can be shielded. Namely, the flanks of the LCDs 1 and 4 are shielded by the metallic shield case 2 held at the earth level similarly and the screen of the LCD is shielded by the transparent conductive film 7. Consequently, the EMI countermeasure can be taken completely.

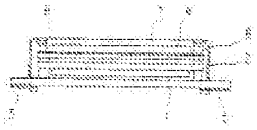

.....
Data supplied from the ***esp@cenet*** database — Worldwide

SEC et al. v. MRI
SEC Exhibit 1020.0100
IPR2023-00255

⑲日本国特許庁（JP）　⑪特許出願公開

⑫公開特許公報（A）　平3－153212

⑤Int. Cl.⁵　識別記号　庁内整理番号　㊸公開　平成3年(1991)7月1日

G 02 F　1/1333　8806－2H
　　1/1345　9018－2H

審査請求　未請求　請求項の数　1　（全3頁）

⑤発明の名称　液晶表示装置

㉑特　願　平1－291285
㉒出　願　平1(1989)11月10日

⑫発明者　小林　七朗　千葉県茂原市早野3300番地　株式会社日立製作所茂原工場内
⑫発明者　関　輝夫　千葉県茂原市早野3300番地　株式会社日立製作所茂原工場内
⑫発明者　青山　直文　千葉県茂原市早野3300番地　株式会社日立製作所茂原工場内
⑫発明者　佐久間　敏幸　千葉県茂原市早野3300番地　株式会社日立製作所茂原工場内
⑪出願人　株式会社日立製作所　東京都千代田区神田駿河台4丁目6番地
⑭代理人　弁理士　小川　勝男　外1名

明　細　書

1．発明の名称

液晶表示装置

2．特許請求の範囲

1．表示用ＬＣＤと、少なくとも上記表示用ＬＣＤの側面周囲を覆う金属シールドケースと、上記表示用ＬＣＤの駆動回路基板とを具備する液晶表示装置において、上記ＬＣＤを構成する表示側の透明基板自体、または別の透明基板のほぼ全面に透明導電膜が設けられ、上記金属シールドケースが上記透明導電膜に電気的に接続され、かつ該金属シールドケースが上記駆動回路基板のアースパターンに電気的に接続されていることを特徴とする液晶表示装置。

3．発明の詳細な説明

〔産業上の利用分野〕

本発明は、液晶表示装置に係り、特に、液晶表示装置におけるＥＭＩ（電磁波妨害：エレクトロマグネティック インタフィアレンス(Electro Magnetic Interference)）対策に関する。

〔従来の技術〕

第２図は、従来の液晶表示装置を示す図で、（ａ）は平面図、（ｂ）は正面図、（ｃ）は（ａ）のⅡ－Ⅱ断面図である。

１は表示用ＬＣＤ（液晶表示部）、２は金属シールドケース、３はＰＣＢ（プリント回路基板）、４は補償用ＬＣＤ（ＬＣＤ画面のバックを白くするためのもの）、５はＰＣＢ３に形成されたアースパターン、６は損傷防止用の絶縁膜である。ＬＣＤ１、４はそれぞれ、寸法の違う上部透明ガラス基板と下部透明ガラス基板とが重ね合わせられ、その間に液晶が封止されている。

すなわち、従来の装置におけるＥＭＩ対策は、ＬＣＤ１、４の側面の周囲に配置され、これらを覆う額縁状の金属シールドケース２をＰＣＢ３のアースパターン５に接続して行っている。アースパターン５は外部アースに接続されている。

従来の液晶表示装置は、例えば特開昭６２－１００７３６号公報、特開昭６２－１７０９４０号公報等に記載されている。

SEC et al. v. MRI
SEC Exhibit 1020.0101
IPR2023-00255

〔発明が解決しようとする課題〕

従来の装置では、ＬＣＤの側面周囲に関しては、ＥＭＩ対策がなされているが、ＬＣＤ画面上に関してはなされていなかった。

本発明の目的は、ＥＭＩ対策を十分施すことができる液晶表示装置を提供することにある。

〔課題を解決するための手段〕

上記の課題を解決するために、本発明は、表示用ＬＣＤと、少なくとも上記表示用ＬＣＤの側面周囲を覆う金属シールドケースと、上記表示用ＬＣＤの駆動回路基板とを具備する液晶表示装置において、上記ＬＣＤを構成する表示側の透明基板自体、または別の透明基板（例えば補償用ＬＣＤ）のほぼ全面に透明導電膜が設けられ、上記金属シールドケースが上記透明導電膜に電気的に接続され、かつ該金属シールドケースが上記駆動回路基板のアースパターンに電気的に接続されていることを特徴とする。

上記全面に設けた透明導電膜と、金属シールドケースとは例えば導電性ゴムを介して接続する。

〔作用〕

本発明の液晶表示装置では、ＬＣＤ画面側の透明基板のほぼ全面に、金属シールドケース・駆動回路基板のアースパターンに接続された透明導電膜が形成され、ＬＣＤ画面上をアースレベルに保つことができるので、ＬＣＤの画面全体をシールドすることができ、ＥＭＩ対策に有効である。

〔実施例〕

第１図は、本発明の一実施例の液晶表示装置を示す図で、（ａ）は平面図、（ｂ）は正面図、（ｃ）は（ａ）のＩ－Ｉ断面図である。

７は補償用ＬＣＤの透明ガラス基板の全面に設けたインジウム－チン－オキサイド（ＩＴＯ膜：ネサ膜）等から成る透明導電膜、８は透明導電膜７と金属シールドケース２とを接続する導電性ゴムである。

本実施例の液晶表示装置では、表示用ＬＣＤ１の表示側に配置された補償用ＬＣＤ４の透明基板のほぼ全面に透明導電膜７が形成され、この透明導電膜７は、導電性ゴム８→金属シールドケース２→ＰＣＢ３のアースパターン５→図示しない外部アースの経路で電気的に接続されている。従って、ＬＣＤ画面上をアースレベルに保つことができるので、ＬＣＤの画面全体をシールドすることができる。すなわち、ＬＣＤ１、４の側面は、同様にアースレベルに保たれた金属シールドケース２により、また、ＬＣＤ画面上は透明導電膜７によりシールドされ、ＥＭＩ対策を完全に施すことができる。

なお、表示用ＬＣＤ１の一方の透明ガラス基板には画素電極としてのパターン化された透明導電膜（図示せず）が、他方の透明ガラス基板には共通画素電極としての透明導電膜（図示せず）が全面に設けられている。本実施例の補償用ＬＣＤ４は、この表示用ＬＣＤ１の上記パターン化された透明画素電極をただ全面に設けるという変更により作製することができる。さらに、導電性ゴム８は補償用ＬＣＤ４の透明ガラス基板の損傷防止にも役立つ。導電性ゴム８は金属シールドケース２で圧縮されている。

以上、本発明の実施例を具体的に説明したが、本発明は上記実施例に限定されるものではなく、その要旨を逸脱しない範囲において種々変更可能であることは勿論である。例えば、上記実施例では、透明導電膜７を補償用ＬＣＤ４の透明ガラス基板の全面に設けたが、表示側に配置した他の透明基板の全面に設けてもよく、さらに、補償用ＬＣＤを設けず、表示用ＬＣＤの透明ガラス基板の表示側に設けても本発明による効果を得ることができる。

また、第１図においては、表示用ＬＣＤを下側に、補償用ＬＣＤを上側に配置する構造になっているが、この配置を逆にして上側に表示用ＬＣＤを、下側に補償用ＬＣＤを配置した場合にも本発明を適用することができる。この場合は、上側に配置された表示用ＬＣＤの上側の基板の外側を透明導電膜で覆い、この透明導電膜をアースすればよい。

〔発明の効果〕

以上説明したように、本発明によれば、ＬＣＤ

SEC et al. v. MRI
SEC Exhibit 1020.0102
IPR2023-00255

側面周囲のみならず、ＬＣＤ画面上もアースレベルに保つことができるので、シールド効果が大きく、ＥＭＩ対策を十分施すことができる。

4．図面の簡単な説明

第１図（ａ）、（ｂ）、（ｃ）は、それぞれ本発明の一実施例の液晶表示装置を示す平面図、正面図、（ａ）のＩ－Ｉ断面図、第２図（ａ）、（ｂ）、（ｃ）は、それぞれ従来の液晶表示装置を示す平面図、正面図、（ａ）のＩＩ－ＩＩ断面図である。

1…表示用ＬＣＤ
2…金属シールドケース
3…ＰＣＢ（プリント回路基板）
4…補償用ＬＣＤ
5…ＰＣＢに形成されたアースパターン
6…損傷防止用の絶縁膜
7…透明導電膜
8…導電性ゴム

代理人弁理士　小　川　勝　男

第１図

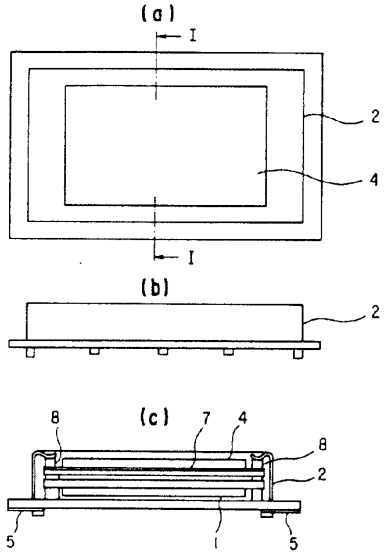

1……表示用LCD
2……金属シールドケース
3……PCB（プリント回路基板）
4……補償用LCD
5……PCBに形成されたアースパターン
7……透明導電膜
8……導電性ゴム

第２図

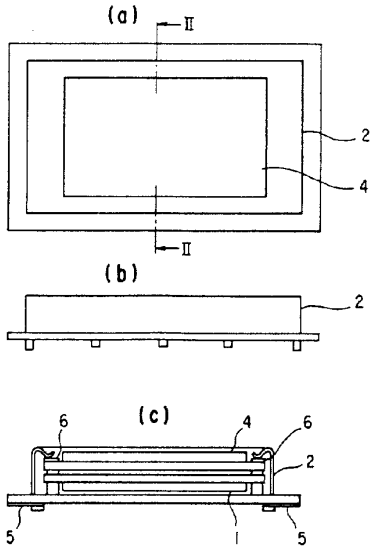

1-----表示用LCD
2-----金属シールドケース
3-----PCB（プリント回路基板）
4----補償用LCD
5-----PCBに形成されたアースパターン
6-----損傷防止用の絶縁膜

SEC et al. v. MRI
SEC Exhibit 1020.0103
IPR2023-00255

DISPLAY DEVICE

Publication number: JP8194437 (A)
Publication date: 1996-07-30
Inventor(s): KOIDE HAJIME
Applicant(s): MATSUSHITA ELECTRIC WORKS LTD
Classification:
- international: ***G09F9/00; G09F9/30;*** **G09F9/00; G09F9/30;** (IPC1-7): G09F9/00; G09F9/00
- European:
Application number: JP19950004432 19950113
Priority number(s): JP19950004432 19950113

Also published as:
JP3179989 (B2)

Abstract of **JP 8194437 (A)**

PURPOSE: To provide a display device in which a warm-up time can be shortened. CONSTITUTION: A display device is provided with a display portion 2 formed by containing and arranging a plurality of fluorescent tube type luminous elements in matrix-like in a display device box body 1. A transparent plate 3 is arranged in front of the display portion 2 so as to cover the front of the display portion 2. Air is introduced from the outside of the display device box body 1 and is exhausted from the front face of the display portion 2 passing through the display portion 2 so that the whole display device is cooled down. A circulation fan 4 is provided so that the warm air between the display portion 2 front face and the transparent plate 3 is introduced to the backside of the display portion 2.

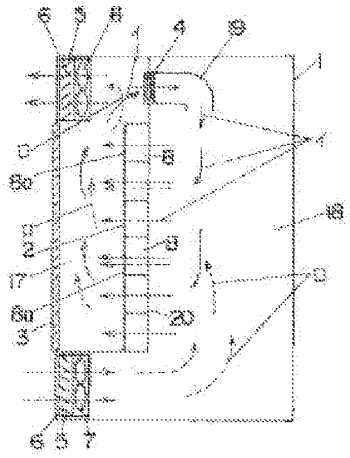

Data supplied from the ***esp@cenet*** database — Worldwide

SEC et al. v. MRI
SEC Exhibit 1020.0104
IPR2023-00255

(19)日本国特許庁（ＪＰ）　(12) 公開特許公報（Ａ）　(11)特許出願公開番号

特開平8－194437

(43)公開日　平成８年(1996)７月30日

(51)Int.Cl.[6]	識別記号	庁内整理番号	ＦＩ	技術表示箇所
Ｇ０９Ｆ　9/00	３６２	7426－5H		
	３０４　Ｂ	7426－5H		

審査請求　未請求　請求項の数２　ＯＬ　（全 ５ 頁）

(21)出願番号　特願平7－4432

(22)出願日　平成７年(1995)１月13日

(71)出願人　000005832
松下電工株式会社
大阪府門真市大字門真1048番地

(72)発明者　小出　肇
大阪府門真市大字門真1048番地松下電工株式会社内

(74)代理人　弁理士　石田　長七　（外２名）

(54)【発明の名称】　表示装置

(57)【要約】
【目的】ウォームアップ時間を短縮することができる表示装置を提供する。
【構成】表示装置箱体１内に収納配置される複数の蛍光管方式の発光素子をマトリックス状に配置した表示部２を備える。表示部２の前方を覆うように表示部２の前方に配置された透明板３を備える。表示装置箱体１外部より空気を導入すると共に表示部２を通って表示部２の前面から排気を行うことにより表示装置全体の冷却を行う表示装置である。表示部２前面と透明板３間の暖気を表示部２の後方に導入する循環用ファン４を備える。

1…表示装置箱体
2…表示部
3…透明板
4…循環用ファン
5…開口部分
6…シャッター
7…ファン装置

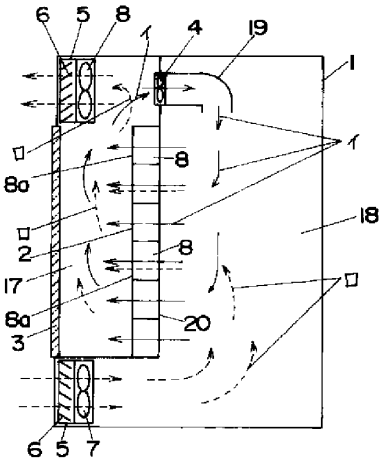

SEC et al. v. MRI
SEC Exhibit 1020.0105
IPR2023-00255

【特許請求の範囲】
【請求項１】　表示装置箱体内に収納配置される複数の蛍光管方式の発光素子をマトリックス状に配置した表示部を備え、表示部の前方を覆うように表示部の前方に配置された透明板を備え、表示装置箱体外部より空気を導入すると共に表示部を通って表示部の前面から排気を行うことにより表示装置全体の冷却を行う表示装置において、表示部前面と透明板間の暖気を表示部の後方に導入する循環用ファンを備えて成ることを特徴とする表示装置。
【請求項２】　内外に連通するように表示装置箱体に設けられた開口部分に開閉自在なシャッターを設け、シャッターの近傍にファン装置を設け、ウォームアップ時には表示装置箱体と外気とを遮断するためにウォームアップ時のファン装置の停止中はシャッターを閉じ、ウォームアップが完了しファン装置が回転中にはシャッターを開けるように上記ファン装置とシャッターとを連動させて成ることを特徴とする請求項１記載の表示装置。
【発明の詳細な説明】
【０００１】
【産業上の利用分野】本発明は、競技場や建物の屋上あるいは壁面等に配置して文字や映像による情報を表示する表示装置に関するものである。
【０００２】
【従来の技術】従来、この種の表示装置として特開平３－５６９８６号公報に示されるようなものがある。このものは図４、図７に示されるように表示面が正方形となっている多色発光型の表示体８をマトリックス状に多数列設して大型表示面を形成し、表示部ユニット２０内に収納されている表示素子駆動回路によって各表示体８の発光色及び発光量を制御し、広告映像、コンピュータグラフィック画像などの静止画像の表示、電光ニュースなどのテロップの表示、ビデオテープの録画画像のような動画の表示を行うようになっている。
【０００３】ところで、このような表示装置は屋外に設置される場合が多く、周囲が明るくても高コントラストの画像を表示できるように高輝度の表示素子を用いており、表示素子及び表示素子駆動回路の消費電力が大きくなって発熱が問題になる。そこで、通常、図５に示されるように表示装置箱体１の後部に送風ファン３０を設け、外気を導入することにより表示装置全体の冷却を行っている。また、表示部ユニット２０の冷却には、図４に示されるように表示部ユニット２０の後方にユニットファン３１を設け、また、マトリックス状に列設された各表示素子間に排気用の微小隙間１６を設けることにより、効果的に表示素子及び駆動回路の冷却を行えるようにしている。
【０００４】
【発明が解決しようとする課題】ところで、この種の表示装置に用いられている蛍光管方式の表示素子には温度特性が存在し、素子の発光輝度は素子の最冷点の温度によって決まる。表示体８は図２、図６、図７に示されるように４個の独立した正方形の発光部を有し、表示面８ａにＲ、Ｇ、Ｂフィルタが覆着された多色発光可能な蛍光ランプよりなる素子本体９と、素子本体９のフィラメント部を囲むように設けられた筒状のランプ保持体１０とで形成され、ランプ保持体１０の後部開口の周縁には表示素子の電極引き出し線１１が接続される電極ピン１２が突設されて口金部が形成されている。また、ランプ保持体１０の後部開口は吸気口１３となっており、ランプ保持体１０の周面の前部下面には排気口１４が設けられ、ランプ保持体１０と素子本体９との間に通風路１５が形成されている。したがって、送風ファン３０及びユニットファン３１による送風を各表示体８の通風路及び表示体８間の微小隙間１６を介して流すことにより表示体８の温度をコントロールしている。このような冷却方法であるため、通常、表示体８の最冷点は図２に示されるガラスバルブ部３２であり、また、このガラスバルブ部３２の温度は表示ユニット２０の後方の周囲温度によって左右される。
【０００５】図３に表示体８の温度特性のグラフを示す。このグラフから分かるように表示ユニット２０の後部温度が４０℃前後で表示体８が最大発光輝度を得ることができ、９０％の発光効率を得るためにも後部温度が３０℃前後必要となる。したがって、冬期等の周囲温度が低い時期には表示装置箱体１内の表示部ユニット２０の後方部の温度が３０℃までに達し、表示体８の輝度が安定するまである程度の時間ウォームアップが必要となり、運用までに時間がかかるという問題があった。
【０００６】本発明は上記問題点の解決を目的とするものであり、ウォームアップ時間を短縮することができる表示装置を提供しようとするものである。
【０００７】
【課題を解決するための手段】上記目的を達成するために、請求項１の発明では、表示装置箱体１内に収納配置される複数の蛍光管方式の発光素子をマトリックス状に配置した表示部２を備え、表示部２の前方を覆うように表示部２の前方に配置された透明板３を備え、表示装置箱体１外部より空気を導入すると共に表示部２を通って表示部２の前面から排気を行うことにより表示装置全体の冷却を行う表示装置において、表示部２前面と透明板３間の暖気を表示部２の後方に導入する循環用ファン４を備えたことを特徴とするものである。
【０００８】請求項２の発明では、請求項１において内外に連通するように表示装置箱体１に設けられた開口部分５に開閉自在なシャッター６を設け、シャッター６の近傍にファン装置７を設け、ウォームアップ時には表示装置箱体１と外気とを遮断するためにウォームアップ時のファン装置７の停止中はシャッター６を閉じ、ウォームアップが完了しファン装置７が回転中にはシャッター

６を開けるように上記ファン装置７とシャッター６とを連動させたことを特徴とするものである。

【０００９】

【作用】請求項１の発明によれば、循環用ファン４によって表示部２前面と透明板３間の暖気を表示部２の後方に導入することで暖気によって表示部２の立ち上げ時のウォームアップ時間を短縮することができる。請求項２の発明によれば、シャッター６の開閉動作によってウォームアップ時には表示装置箱体１外の外気と表示装置箱体１内とを遮断して外の冷気が表示装置箱体１内に侵入するのを防止し、また、表示装置箱体１内の暖気が外部に流出するのを防止することができ、表示部２から発生する熱を効率よく利用することによってウォームアップ時間を短縮することができる。また、ファン装置７によって表示装置箱体１外の冷気を表示装置箱体１内に流入させると共に表示装置箱体１内の暖気を表示装置箱体１外に排出することで表示部２の冷却を行うことができる。

【００１０】

【実施例】以下、本発明を図示された実施例に基づいて詳述する。本発明における表示装置は、内部に通気路が形成された表示装置箱体１内に複数の表示体８を隣合うように収納配置して主体が構成されている。表示体８は図２、図６に示されるように４個の独立した正方形の発光部を有しており、表示面８ａにＲ、Ｇ、Ｂフィルタが覆着された多色発光可能な蛍光ランプよりなる素子本体９と、素子本体９のフィラメント部を囲むように設けられた筒状のランプ保持体１０とで形成され、ランプ保持体１０の後部開口の周縁には表示体８の電極引き出し線１１が接続される電極ピン１２が突設されて口金部が形成されている。ランプ保持体１０の後部開口は吸気口１３となっており、ランプ保持体１０の周面の前部下面には排気口１４が設けられ、ランプ保持体１０と素子本体９との間に通風路１５が形成されている。この表示体８は図７に示されるように複数隣合うように設置されるものであり、隣合う表示体８間には微小間隙１６が設けられている。そして、後述するファン装置７及び循環用ファン４による送風を各表示体８の通風路１５及び表示体８間の微小隙間１６を介して流すことにより表示体８の温度をコントロールするようになっている。

【００１１】表示体８が収納配置される表示装置箱体１は図１に示されるように上下部に開口部分５が設けられており、開口部分５には開閉自在なシャッター６が設置されている。シャッター６の内方にはファン装置７が設置されている。上記表示体８は表示装置箱体１内を前後に仕切るように表示装置箱体１内の略中央部に設置されており、表示体８の前方には強化ガラス等からなる透明板３が設置されており、透明板３と表示体８の前面の表示面８ａとの間には第１通気空間１７が形成されている。また、表示体８の背方と表示装置箱体１の後部との間には第２通気空間１８が形成されている。表示体８の上方に位置するように表示装置箱体１内の上部には循環用ファン４が設置されており、循環用ファン４を介して第１通気空間１７と第２通気空間１８とが連通している。循環用ファン４からは第２通気空間１８の下部に向けて送風ダクト１９が取付けられている。表示装置箱体１内には温度センサーが設置されており、表示装置箱体１内の温度によりファン装置７の回転数をインバータ等で制御して外気の導入量を調整するようになっている。また、シャッター６及び循環用ファン４はファン装置７と連動しており、低温時及びウォームアップ時のファン装置７の停止時にはシャッター６を閉の状態にし、表示装置箱体１と外気とを遮断して外部の冷気の侵入を防止すると共に表示装置箱体１内部の暖気の流出を防止するようになっている。このとき、循環用ファン４は回転しており、複数の表示体８からなる表示体ユニット２０と透明板３間の暖気を表示ユニット２０の後方に導入している。送風ダクト１９は下向きに送風するように取付けられており、表示部ユニット２０前面の暖気及び表示部ユニット２０後方の上部に溜まった暖気を攪拌する働きを有するようになっている。

【００１２】しかして、低温時やウォームアップ時にはシャッター６を閉じた状態にすると共にファン装置７を停止させた状態にし、循環用ファン４のみを作動させることによって図１中実線矢印イにて示されるように表示装置箱体１内において第１通気空間１７と第２通気空間１８との間で空気が循環することとなり、表示体８の作動によって表示体８と透明板３との間に存在する第１通気空間１７内の暖気が循環して表示体８のウォームアップを迅速に行うことができるものであり、表示体８の輝度が安定するまでのウォームアップ時間を短縮することができ、正常な運用までにかかる時間を大幅に短縮することができるようになっている。また、表示体８の温度が必要以上に上昇すると表示体を冷却するものであるが、表示体８を冷却するにあたっては、シャッター６を開いて各シャッター６の内方に設置されているファン装置７を駆動させ、図１中破線矢印ロにて示されるように表示装置箱体１の下部より第２通気空間１８内に表示装置箱体１外の空気を導入し、各表示体８内及び各表示体８間の微小間隙１６を介して第１通気空間１７に向けて空気を流して各表示体８を冷却し、第１通気空間１７より上部のファン装置７を介して表示装置箱体１外に空気を排出するようにして表示体８が冷却されるものである。

【００１３】

【発明の効果】請求項１の発明は、表示装置箱体内に収納配置される複数の蛍光管方式の発光素子をマトリックス状に配置した表示部を備え、表示部の前方を覆うように表示部の前方に配置された透明板を備え、表示装置箱体外部より空気を導入すると共に表示部を通って表示部

の前面から排気を行うことにより表示装置全体の冷却を行う表示装置において、表示部前面と透明板間の暖気を表示部の後方に導入する循環用ファンを備えているので、循環用ファンによって表示部前面と透明板間の暖気を表示部の後方に導入することで暖気によって表示部の立ち上げ時のウォームアップ時間を短縮することができるものである。

【００１４】請求項２の発明は、請求項１において内外に連通するように表示装置箱体に設けられた開口部分に開閉自在なシャッターを設け、シャッターの近傍にファン装置を設け、ウォームアップ時には表示装置箱体と外気とを遮断するためにウォームアップ時のファン装置の停止中はシャッターを閉じ、ウォームアップが完了しファン装置が回転中にはシャッターを開けるように上記ファン装置とシャッターとを連動させてあるので、請求項１の効果に加えてシャッターの開閉動作によってウォームアップ時には表示装置箱体外の外気と表示装置箱体内とを遮断して外の冷気が表示装置箱体内に侵入するのを防止することができ、また、表示装置箱体内の暖気が外部に流出するのを防止することができ、表示部から発生する熱を効率よく利用することによってウォームアップ時間を短縮することができるものである。また、ファン装置によって表示装置箱体外の冷気を表示装置箱体内に流入させると共に表示装置箱体内の暖気を表示装置箱体外に排出することで表示部の冷却を行うことができるものである。

【図面の簡単な説明】

【図１】本発明の一実施例を示す概略断面図である。

【図２】表示体の内部構成を示す概略断面図である。

【図３】温度変化と発光輝度を示すグラフである。

【図４】従来例を示す概略構成図である。

【図５】同上の内部構成を示す概略断面図である。

【図６】表示体を示す斜視図である。

【図７】表示部を説明する説明図である。

【符号の説明】

１　表示装置箱体
２　表示部
３　透明板
４　循環用ファン
５　開口部分
６　シャッター
７　ファン装置

【図１】

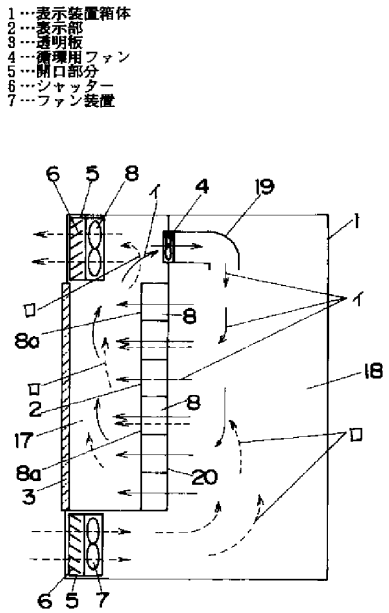

【図２】

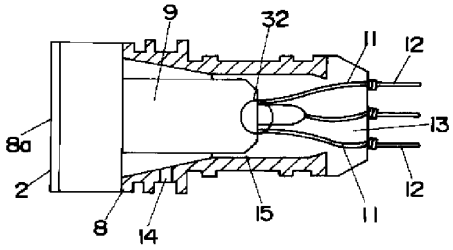

【図３】

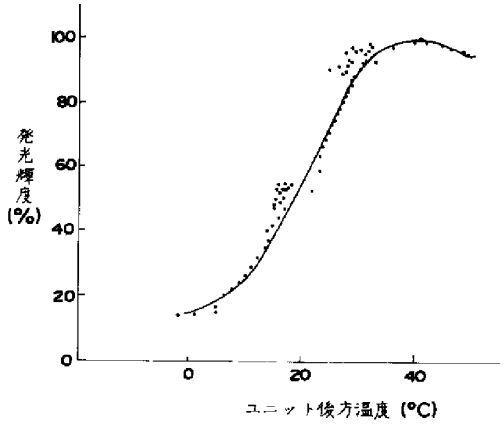

【図4】

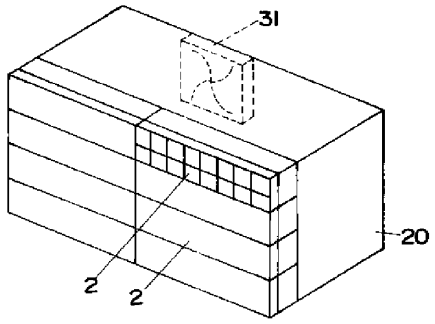

【図5】

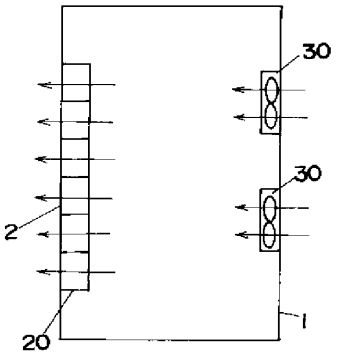

【図6】

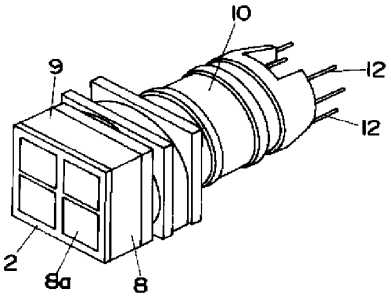

【図7】

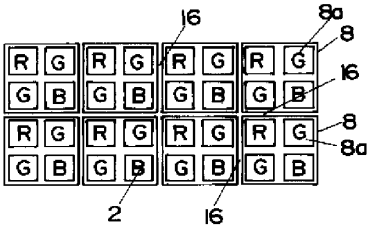

LIQUID CRYSTAL DISPLAY DEVICE

Publication number: JP11160727 (A)
Publication date: 1999-06-18
Inventor(s): NAKABASHI TERUHISA; NAKAYAMA AKIO
Applicant(s): ADVANCED DISPLAY KK
Classification:
- international: ***G02F1/136; G02F1/1368;*** **G02F1/13;** (IPC1-7): G02F1/136
- European:
Application number: JP19970330174 19971201
Priority number(s): JP19970330174 19971201

Abstract of **JP 11160727 (A)**

PROBLEM TO BE SOLVED: To provide a liquid crystal device(LCD) with which electromagnetic waves radiating from a peripheral circuit or back light to a liquid crystal display panel can be remarkably reduced and the structure of the LCD is not complicated due to countermeasures for electro-magnetic interference(EMI). SOLUTION: This display device is provided with a first transparent substrate, a second transparent substrate opposed to the first transparent substrate, a liquid crystal display panel containing liquid crystal material held between the said first and second transparent substrates, and back light arranged on the surface of the liquid crystal display panel for radiating light to the liquid crystal display panel. On one surface of the first transparent substrate, which abuts on the liquid crystal material, switching elements are formed in the form of matrix and two kinds of wirings for supplying electric signals to the switching elements are provided so as to mutually cross at right angles. In this case, a transparent conductive film 5 is formed over the part provided at the outer peripheral part of a display part 9 of the first transparent substrate between the two kinds of wirings.

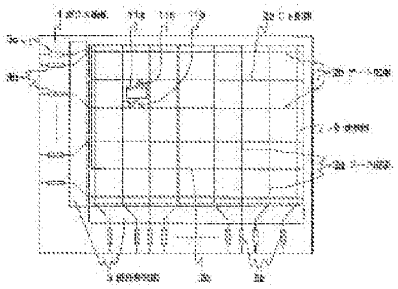

.....
Data supplied from the ***esp@cenet*** database — Worldwide

SEC et al. v. MRI
SEC Exhibit 1020.0110
IPR2023-00255

(19)日本国特許庁（ＪＰ）　(12) 公開特許公報（Ａ）　(11)特許出願公開番号

特開平11－160727

(43)公開日　平成11年(1999) 6月18日

(51)Int.Cl.[6]	識別記号	ＦＩ	
Ｇ０２Ｆ　1/136	５００	Ｇ０２Ｆ　1/136	５００

審査請求　未請求　請求項の数８　ＯＬ　（全 10 頁）

(21)出願番号　特願平9－330174

(22)出願日　平成９年(1997)12月１日

(71)出願人　595059056
株式会社アドバンスト・ディスプレイ
熊本県菊池郡西合志町御代志997番地

(72)発明者　中橋　輝久
熊本県菊池郡西合志町御代志997番地　株式会社アドバンスト・ディスプレイ内

(72)発明者　中山　明男
熊本県菊池郡西合志町御代志997番地　株式会社アドバンスト・ディスプレイ内

(74)代理人　弁理士　朝日奈　宗太　（外１名）

(54)【発明の名称】　液晶表示装置

(57)【要約】

【課題】　周辺回路やバックライトなどから液晶表示パネルへの電磁波を大幅に低減でき、かつ、ＥＭＩ対策のためにＬＣＤの構造を複雑化することがない液晶表示装置を提供する。

【解決手段】　第１の透明基板、該第１の透明基板に対向する第２の透明基板、および前記第１の透明基板と第２の透明基板とのあいだに挟持される液晶材料を含んでなる液晶表示パネルと、該液晶表示パネル表面に配置され、液晶表示パネルに光を放射するバックライトとを含んでなり、前記第１の透明基板表面のうち液晶材料に接する側の面上に、スイッチング素子がマトリクス状に形成され、かつ、該スイッチング素子に電気信号を供給する２種類の配線が互いに直交するように設けられてなる液晶表示装置であって、前記２種類の配線のうち第１の透明基板の表示部の外周部に設けられる部分の上方に透明導電膜が形成されてなる。

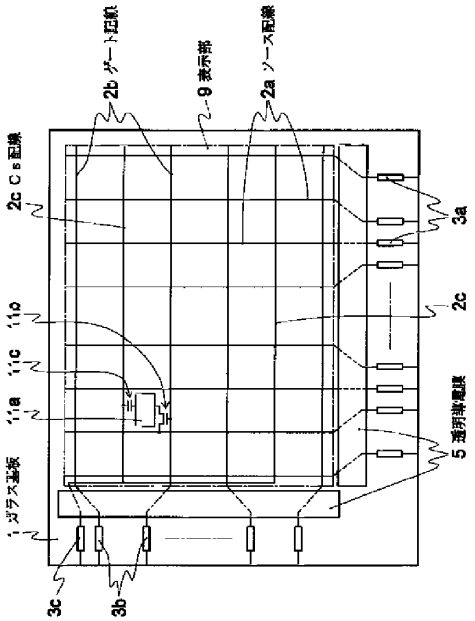

SEC et al. v. MRI
SEC Exhibit 1020.0111
IPR2023-00255

【特許請求の範囲】
【請求項１】　第１の透明基板、該第１の透明基板に対向する第２の透明基板、および前記第１の透明基板と第２の透明基板とのあいだに挟持される液晶材料を含んでなる液晶表示パネルと、該液晶表示パネル表面に配置され、液晶表示パネルに光を放射するバックライトとを含んでなり、前記第１の透明基板表面のうち液晶材料に接する側の面上に、スイッチング素子がマトリクス状に形成され、かつ、該スイッチング素子に電気信号を供給する２種類の配線が互いに直交するように設けられてなる液晶表示装置であって、前記２種類の配線のうち第１の透明基板の表示部の外周部に設けられる部分の上方に透明導電膜が形成されてなる液晶表示装置。
【請求項２】　前記透明導電膜の材料がＩＴＯである請求項１記載の液晶表示装置。
【請求項３】　前記透明導電膜が前記２種類の配線の一端部に接続されることにより外部接続端子として機能する請求項１記載の液晶表示装置。
【請求項４】　第１の透明基板、該第１の透明基板に対向する第２の透明基板、および前記第１の透明基板と第２の透明基板とのあいだに挟持される液晶材料を含んでなる液晶表示パネルと、該液晶表示パネル表面に配置され、液晶表示パネルに光を放射するバックライトとを含んでなる液晶表示装置であって、前記第１の透明基板表面のうち液晶材料に接する側の面上に透明導電膜が形成され、該透明導電膜の上方にスイッチング素子がマトリクス状に形成され、かつ、該スイッチング素子に電気信号を供給する２種類の配線が互いに直交するように設けられてなる液晶表示装置。
【請求項５】　前記透明導電膜の材料がＩＴＯである請求項４記載の液晶表示装置。
【請求項６】　第１の透明基板、該第１の透明基板に対向する第２の透明基板、および前記第１の透明基板と第２の透明基板とのあいだに挟持される液晶材料を含んでなる液晶表示パネルと、該液晶表示パネル表面に配置され、液晶表示パネルに光を放射するバックライトとを含んでなる液晶表示装置であって、前記第１の透明基板表面のうち液晶材料に接する側の面上に第１の透明導電膜が形成され、該第１の透明導電膜の上方にスイッチング素子がマトリクス状に形成され、かつ、該スイッチング素子に電気信号を供給する２種類の配線が互いに直交するように設けられ、さらに前記２種類の配線のうち第１の透明基板の表示部の外周部に設けられる部分の上方に第２の透明導電膜が形成されてなる液晶表示装置。
【請求項７】　前記第１の透明導電膜および第２の透明導電膜の材料がＩＴＯである請求項６記載の液晶表示装置。
【請求項８】　前記第１の透明導電膜が前記２種類の配線の一端部に接続されることにより外部接続端子として機能する請求項６記載の液晶表示装置。

【発明の詳細な説明】
【０００１】
【発明の属する技術分野】本発明は、液晶表示装置などの平面型表示装置用のアクティブマトリクス型装置の駆動回路やバックライトなどで発生した電磁波により生じるＥＭＩ（electro magnetic interference)に対する対策を施した液晶表示装置に関する。
【０００２】
【従来の技術】従来の液晶表示装置（以下、「ＬＣＤ」ともいう）は、液晶表示パネルと、該液晶表示パネルを挟持する２枚の偏光板と、該偏光板を介して液晶表示パネルに光を放射するバックライトと、前記液晶表示パネルに電気信号を供給する駆動回路とからなる。
【０００３】前記液晶表示パネルは、第１の透明基板と第２の透明基板と液晶材料とを含んでなる。前記液晶表示パネルは、第１の透明基板を第２の透明基板に一定の間隙を保持しつつ対向させた状態にし、第１の透明基板の周縁部を第２の透明基板の周縁部に貼着したのち、前記間隙に液晶材料に注入することにより形成される。従来のＬＣＤの一例であるアクティブマトリクス型ＬＣＤの液晶表示パネルの表示部はマトリクス状に形成された画素からなる。各画素には、液晶材料を駆動するための電界を発生するための透明電極と、薄膜トランジスタ（以下、「ＴＦＴ」という）などのスイッチング素子とが設けられる。駆動回路から出力された電気信号は、スイッチング素子を介して各画素の透明電極に印加される。前記駆動回路は、走査信号を出力する駆動回路（以下、「走査駆動回路」という）とデータ信号を出力する駆動回路（以下、「データ駆動回路」という）とからなる。走査信号およびデータ信号は、それぞれゲート配線およびソース配線を介してスイッチング素子に印加される。
【０００４】一般に、アクティブマトリクス型ＬＣＤは、高視野角および高コントラストなどの特徴を有し、ＡＶ（audio-visual）およびＯＡ（office automation）用のＬＣＤに広く用いられている。
【０００５】前記アクティブマトリクス型ＬＣＤの構造や製法は、特開平８－６０６９号公報に開示されている。この種のアクティブマトリクス型ＬＣＤにおける電磁干渉（electro magnetic interference （ＥＭＩ））対策としては、駆動回路から出力される電気信号の立ち上がり部分または立ち下がり部分を鈍らせるようにし、高調波の発生を抑制したり、最近では、液晶表示パネルの表示面に透光性の電磁波シールド板などを設け、表示面から射出される電磁波が前記シールド板にて遮断されるようにしたりして、電磁波を低減している。なお、シールド板による遮断を行ったＬＣＤの一例は、特開昭６２－２２９１７９号公報に開示されている。
【０００６】前述のように、従来のＥＭＩ対策が施されたＬＣＤでは、シールド板を固定するための構成を液晶

表示パネルに設けることが必要で、しかも、この構成が複雑になったり、シールド板の固定取り付け作業が、煩雑になったり、シールド板による干渉縞で画面が見づらくなるという問題があった。

【０００７】また、第１の透明基板表面にＴＦＴ、透明電極、ゲート配線およびソース配線などが設けられてなる基板（以下、「アクティブマトリクス基板」という）自体には、これといったＥＭＩ対策は施されていない。

【０００８】図１１は、従来のアクティブマトリクス基板の一例を示す説明図である。図１１において、１は、第１の透明基板であるガラス基板、２ａはソース配線、２ｂは、ゲート絶縁膜（図示せず）を介してソース配線に直交するゲート配線、２ｃは、ゲート絶縁膜を介してソース配線２ａに直交し、かつ、補助容量を形成するためのコモン信号が印加されるＣｓ配線、３ａはソース配線２ａに接続された外部接続端子（以下、「ソース外部接続端子」という）、３ｂはゲート配線２ｂに接続された外部接続端子（以下、「ゲート外部接続端子」という）、３ｃはＣｓ配線２ｃに接続された外部接続端子（以下、「Ｃｓ外部接続端子」という）、４はテーパ配線部、９は、ガラス基板１の表示部、１１ａは透明電極、１１ｂは、走査信号が所定の電圧値になっているときのみデータ信号を透明電極１１ａに印加するＴＦＴ（等価的に示されている）、１１ｃは、光リーク電流やフィールドスルーによる影響を防止する補助容量、１２は周辺端子部を示す。前記ソース外部接続端子３ａ、ゲート外部接続端子３ｂは、データ駆動回路および走査駆動回路の出力端子をソース配線２ａおよびゲート配線２ｂに接続するための端子であり、前記周辺端子部１２とはガラス基板１の表示部９の外周部のうち、ソース配線２ａ、ゲート配線２ｂおよびＣｓ配線２ｃの一端部と、前記ソース外部接続端子３ａ、ゲート外部接続端子３ｂおよびＣｓ外部接続端子３ｃとが形成される部分をいう。なお、Ｃｓ配線２ｃのうちゲート配線２ｂと交差する箇所は、絶縁膜を介してゲート配線２ｂと交差する。したがって、コモン信号はＣｓ外部接続端子３ｃを介してＣｓ配線２ｃのみに印加される。また、テーパ配線部４は、ソース配線２ａおよびゲート配線２ｂのうち、データ駆動回路および走査駆動回路を形成する際にパッケージとしてＴＣＰ（tape carrier package）を使用していることに対応してテーパ状に形成されている部分である。なお、図１１には、ソース配線２ａが８本のみ、ゲート配線２ｂが４本のみ、Ｃｓ配線２ｃが２本のみ示されており、透明電極１１ａ、ＴＦＴ１１ｂおよび補助容量１１ｃは一画素分のみ示されているが、それぞれの数はこれに限られない。また、２本のソース配線２ａおよび２本のゲート配線２ｂによって区切られる１つの領域が１つの画素である。

【０００９】従来のアクティブマトリクス基板の周辺端子部に設けられたゲート配線およびソース配線の上層にはゲート絶縁膜やＤＣ（直流電流）カット用の絶縁膜（以下、単に「ＤＣカット絶縁膜」という）が形成されているだけであり、駆動回路などの周辺回路やバックライトなどからの電磁波により生じるＥＭＩへの影響が大きい。

【００１０】

【発明が解決しようとする課題】前述のように、従来のＬＣＤによれば、周辺回路やバックライトからの電磁波によりＥＭＩが悪化したり、ＥＭＩを低減するためにＬＣＤの構造が複雑化するという問題が生じる本発明はかかる問題を解決するためになされたもので、周辺回路やバックライトなどから液晶表示パネルへの電磁波を大幅に低減し、ＥＭＩ対策のためにＬＣＤの構造を複雑化することがなく、容易に電磁波を低減し、ＥＭＩを改善することができるアクティブマトリクス基板を用いた液晶表示装置を提供することを目的とする。

【００１１】

【課題を解決するための手段】本発明の液晶表示装置は、第１の透明基板、該第１の透明基板に対向する第２の透明基板、および前記第１の透明基板と第２の透明基板とのあいだに挟持される液晶材料を含んでなる液晶表示パネルと、該液晶表示パネル表面に配置され、液晶表示パネルに光を放射するバックライトとを含んでなり、前記第１の透明基板表面のうち液晶材料に接する側の面上に、スイッチング素子がマトリクス状に形成され、かつ、該スイッチング素子に電気信号を供給する２種類の配線が互いに直交するように設けられてなる液晶表示装置であって、前記２種類の配線のうち第１の透明基板の表示部の外周部に設けられる部分の上方に透明導電膜が形成されてなるものである。

【００１２】また、前記透明導電膜の材料がＩＴＯである。

【００１３】また、前記透明導電膜が前記２種類の配線の一端部に接続されることにより外部接続端子として機能するものである。

【００１４】本発明の液晶表示装置は、第１の透明基板、該第１の透明基板に対向する第２の透明基板、および前記第１の透明基板と第２の透明基板とのあいだに挟持される液晶材料を含んでなる液晶表示パネルと、該液晶表示パネル表面に配置され、液晶表示パネルに光を放射するバックライトとを含んでなる液晶表示装置であって、前記第１の透明基板表面のうち液晶材料に接する側の面上に透明導電膜が形成され、該透明導電膜の上方にスイッチング素子がマトリクス状に形成され、かつ、該スイッチング素子に電気信号を供給する２種類の配線が互いに直交するように設けられてなるものである。

【００１５】また、前記透明導電膜の材料がＩＴＯである。

【００１６】本発明の液晶表示装置は、第１の透明基板、該第１の透明基板に対向する第２の透明基板、およ

び前記第１の透明基板と第２の透明基板とのあいだに挟持される液晶材料を含んでなる液晶表示パネルと、該液晶表示パネル表面に配置され、液晶表示パネルに光を放射するバックライトとを含んでなる液晶表示装置であって、前記第１の透明基板表面のうち液晶材料に接する側の面上に第１の透明導電膜が形成され、該第１の透明導電膜の上方にスイッチング素子がマトリクス状に形成され、かつ、該スイッチング素子に電気信号を供給する２種類の配線が互いに直交するように設けられ、さらに前記２種類の配線のうち第１の透明基板の表示部の外周部に設けられる部分の上方に第２の透明導電膜が形成されてなるものである。

【００１７】また、前記第１の透明導電膜および第２の透明導電膜の材料がＩＴＯである。

【００１８】また、前記第１の透明導電膜が前記２種類の配線の一端部に接続されることにより外部接続端子として機能するものである。

【００１９】

【発明の実施の形態】つぎに、本発明の液晶表示装置の実施の形態について説明する。

【００２０】本発明の液晶表示装置の実施の形態においては、アクティブマトリクス基板が、ゲート配線およびソース配線のうち第１の透明基板の表示部の外周部に設けられる部分（すなわち、テーパ配線部）の上方に形成される透明導電膜、および／または第１の透明基板表面のうち液晶材料に接する側の面上に形成される透明導電膜を含んでなる。２つの透明導電膜は、いずれも液晶表示パネルから電磁波を遮断するために設けられる。

【００２１】透明導電膜をテーパ配線部の上方に形成するばあい、透明導電膜とゲート配線およびソース配線とのあいだには絶縁膜が形成される。なお、該絶縁膜は、透明導電膜と、絶縁膜の下方に形成されるものとのあいだで導通をとる箇所を除いて透明導電膜の全表面に形成される。このばあい、前記絶縁膜を形成したのち、透明導電膜となる膜をガラス基板の上方全体に成膜し、当該膜を従来からのパターンエッチング法を用いてエッチングし、テーパ配線部の上方に透明導電膜を形成する。なお、前記エッチングの際に、透明導電膜となる膜をゲート配線の端部、ソース配線の端部およびＣｓ配線の端部の上方にも残すことにより、ゲート外部接続端子、ソース外部接続端子およびＣｓ外部接続端子が形成される。該ゲート外部接続端子、ソース外部接続端子およびＣｓ外部接続端子が形成される箇所の絶縁膜はあらかじめ除去されている。

【００２２】また、透明導電膜を第１の透明基板表面に形成するばあい、当該透明導電膜表面に絶縁膜が形成されたのちＴＦＴ、ゲート配線およびソース配線などからなるＴＦＴアレイが形成される。なお、前記透明導電膜表面に形成される絶縁膜は透明導電膜の全表面に形成される。

【００２３】さらに、５枚マスク構造のアクティブマトリクス基板を形成するばあい、表示用の透明電極をパターニングする際、同時に電磁波遮断用の透明導電膜をテーパ配線部の上方にパターニングする。なお、前記５枚マスク構造のアクティブマトリクス基板は、ガラス基板上に、ゲート配線と、ゲート絶縁膜と、ＴＦＴの一部を構成するシリコンと、ソース配線およびドレイン配線と、保護絶縁膜と、該保護絶縁膜に形成されたコンタクトホールを介して前記ソース配線およびドレイン配線に電気的に接続される外部接続端子としてのＩＴＯ膜とを順次設けることにより形成される。さらに、アクティブマトリクス基板の他の例としては、６枚マスク構造のアクティブマトリクス基板がある。該６枚マスク構造のアクティブマトリクス基板は、ガラス基板上に、ゲート配線と、ゲート絶縁膜と、ＴＦＴの一部を構成するシリコンと、前記ソース配線およびドレイン配線に電気的に接続される外部接続端子としてのＩＴＯ膜と、保護絶縁膜と、該保護絶縁膜に形成されたコンタクトホールを介して外部接続端子に電気的に接続されるソース配線およびドレイン配線と、ＤＣカット絶縁膜とを設けることにより形成される。ＬＣＤおよび該ＬＣＤの基本的な製法などについては、特開平８－６０６９号公報に開示されている。

【００２４】

【実施例】つぎに、本発明の液晶表示装置の実施例について図面を参照しつつ説明する。

【００２５】実施例１．図面を参照しつつ、本発明の液晶表示装置の実施例１について説明する。

【００２６】図１は、本発明の液晶表示装置の実施例１にかかわるアクティブマトリクス基板の一例を示す説明図である。図１において、図１１と同一の箇所は同じ符号を用いて示す。さらに、５は、ＩＴＯ（indium tin oxide）などからなる透明導電膜を示す。

【００２７】透明導電膜５は電磁波を遮断するために形成される。さらに、透明導電膜５は、ソース配線２ａおよびゲート配線２ｂのテーパ配線部の上方に形成される。図示されていないが、ソース配線２ａおよびゲート配線２ｂと透明導電膜５とのあいだには、ゲート絶縁膜などの絶縁膜が形成されている。該絶縁膜は、透明導電膜５と、絶縁膜下部に形成されるものとのあいだで導通をとる箇所を除いて、ガラス基板１の全面に形成される。なお、前記導通をとる箇所の例としては、透明導電膜５のうちソース外部接続端子、ゲート外部接続端子またはＣｓ外部接続端子として利用される部分の下部に位置する箇所がある。

【００２８】図２は、図１のアクティブマトリクス基板のうちテーパ配線部および該テーパ配線部の周辺部を示す拡大断面説明図である。図２において、図１と同一の箇所は同じ符号を用いて示す。さらに、６は、ゲート絶縁膜などの絶縁膜を示す。なお、図２には、ソース配線

２ａのテーパ配線部および該テーパ配線部の周辺部が示されている。

【００２９】図２に示されるように、テーパ配線部の上方には、ＩＴＯ、In_2O_3 またはSnO_2 などの透明導電材料を用いて電磁波遮断用の透明導電膜５が形成される。前記透明導電膜５により、バックライトや周辺回路から送出される方形波などが原因となって、ＬＣＤを構成するあらゆる回路および配線などから放出される電磁波が透明導電膜５により遮断される。したがって、バックライトや周辺回路から液晶表示パネルへの電磁波を低減することができる。

【００３０】また、電磁波を透明導電膜５を介してグランド（接地面）へ落としてもよい。図３は、本発明の液晶表示装置の実施例１にかかわる液晶表示パネルおよび該液晶表示パネルの周辺部の一例を示す説明図である。図３において、図１および図２と同一の箇所は同じ符号を用いて示す。さらに、１０は、液晶表示パネルを支持する金属フレーム、１１は金属製導線、２１はアクティブマトリクス基板、２２は第２の透明基板、２３は液晶材料、２４は、第１の透明基板の周縁部を第２の透明基板の周縁部に貼着する際に使用されるシール材を示す。金属製導線１１は、透明導電膜５と金属フレーム１０とを電気的に接続するために設けられる。なお、実際は液晶表示パネルを挟持するように２枚の偏光板が設けられるが、図３では省略されており図示されていない。

【００３１】図３に示される構造においては、バックライトや周辺回路から発生している電磁波は、透明導電膜５から、金属製導線１１および金属フレーム１０を経てグランドへ落とされる。したがって、バックライトや周辺回路から液晶表示パネルへの電磁波を大幅に低減し、ＥＭＩを改善することができる。さらに、図３に示される構造を採用することで、ＥＭＩ対策のためにＬＣＤの構造が複雑化することを抑制できる。

【００３２】実施例２．つぎに、本発明の液晶表示装置の実施例２について図面を参照しつつ説明する。

【００３３】図４は、本発明の液晶表示装置の実施例２にかかわるアクティブマトリクス基板の一例を示す説明図である。図４において、図１と同一の箇所は同じ符号を用いて示す。図４に示されるように、ガラス基板の全面に透明導電膜５が設けられる。図示されていないが、ソース配線２ａおよびゲート配線２ｂと透明導電膜５とのあいだには、ゲート絶縁膜などの絶縁膜が形成されている。該絶縁膜は透明導電膜５の全面に形成される。

【００３４】図５は、図４のアクティブマトリクス基板のうちテーパ配線部および該テーパ配線部の周辺部を示す拡大断面説明図である。図５において、図４と同一の箇所は同じ符号を用いて示す。さらに、６は、ゲート絶縁膜などの絶縁膜、７は、ゲート配線、ソース配線、ＴＦＴおよび透明電極を含んでなるＴＦＴアレイを示す。なお、図５には、ガラス基板のうちゲート配線およびソース配線が形成されていない箇所が示されている。

【００３５】本実施例においては、透明導電膜５は、ＬＣＤを製造する工程のうち、アクティブマトリクス基板のＴＦＴアレイを形成する工程（以下、「アレイ工程」という）の第１番目の工程において形成される。

【００３６】また、電磁波を透明導電膜５を介してグランド（接地面）へ落としてもよい。図６は、本発明の液晶表示装置の実施例２にかかわる液晶表示パネルおよび該液晶表示パネルの周辺部の一例を示す説明図である。図６において、図４および図５と同一の箇所は同じ符号を用いて示す。さらに、１０は、液晶表示パネルを支持する金属フレーム、１１は金属製導線、２２は第２の透明基板、２３は液晶材料、２４は、第１の透明基板の周縁部を第２の透明基板の周縁部に貼着する際に使用されるシール材を示す。金属製導線１１は、透明導電膜５と金属フレーム１０とを電気的に接続するために設けられる。なお、実際は液晶表示パネルを挟持するように２枚の偏光板が設けられるが、図６では省略されており図示されていない。

【００３７】図６に示される構造においては、透明導電膜５と金属製導線１１とを電気的に接続するために、絶縁膜６に少なくとも１つの開口部を設ける。その結果、バックライトや周辺回路から発生している電磁波は、透明導電膜５から、金属製導線１１および金属フレーム１０を経てグランドへ落とされる。したがって、バックライトや周辺回路から液晶表示パネルへの電磁波を大幅に低減し、ＥＭＩを改善することができる。さらに、図６に示される構造を採用することで、ＥＭＩ対策のためにＬＣＤの構造が複雑化することを抑制できる。

【００３８】実施例３．つぎに、本発明の液晶表示装置の実施例３について図面を参照しつつ説明する。

【００３９】図７は、本発明の液晶表示装置の実施例３にかかわるアクティブマトリクス基板の一例を示す説明図である。図８は、図７のアクティブマトリクス基板のうち周辺端子部を示す部分拡大説明図である。図８（ａ）は周辺端子部を示す平面説明図であり、図８（ｂ）は図８（ａ）のＡ－Ａ線断面説明図である。図７および図８において、図１および図２と同一の箇所は同じ符号を用いて示す。さらに、１３は、絶縁膜６（図８（ｂ）にのみ示される）に設けられた開口部である。図８には、周辺端子部のうちソース配線が形成される部分が示されている。なお、図８（ａ）に示される電位V_xは、ソース外部接続端子として形成された透明導電膜５に所定の電位V_xが印加できることを示し、電位V_xは、通常、ソース外部接続端子に印加される電位を示す。さらに、矢印Ｂで示される方向には表示部があり、矢印Ｃで示される方向には、液晶表示パネルを製造するあいだ、ソース外部接続端子とゲート外部接続端子とのあいだの電位差をなくし、静電気によるＴＦＴ素子などの破壊を防ぐために設けられたショートリングがある。

【００４０】図７および図８に示されるように、透明導電膜５は、テーパ配線部の上部に設けられるとともに、さらにソース外部接続端子を形成する箇所にも形成され、ソース外部接続端子として機能する。図８に示されるように、透明導電膜５は開口部１３においてソース配線２ａと電気的に接続される。開口部１３は、絶縁膜６の所定の箇所をたとえばドライエッチング法によりエッチングすることにより形成される。

【００４１】実施例３によれば、電磁波を透明導電膜５により遮断してバックライトや周辺回路から液晶表示パネルへの電磁波を低減することができる。

【００４２】実施例４．つぎに、本発明の液晶表示装置の実施例４について図面を参照しつつ説明する。

【００４３】図９は、本発明の液晶表示装置の実施例４にかかわるアクティブマトリクス基板の一例を示す説明図である。図１０は、図９のアクティブマトリクス基板のうちソース配線が形成されるテーパ配線部および該テーパ配線部の周辺部を示す拡大断面説明図である。図９および図１０において、図１および図２と同一の箇所は同じ符号を用いて示す。さらに、図９および図１０において、５ａは、ガラス基板１全面に形成される第１の透明導電膜、５ｂは、ソース配線２ａおよびゲート配線２ｂの上方に形成される第２の透明導電膜、６ａは、第１の透明導電膜５ａ上に形成される第１の絶縁膜、６ｂは、第２の透明導電膜５ｂとソース配線２ａおよびゲート配線２ｂとのあいだに形成される第２の絶縁膜、１３は、第２の絶縁膜６ｂに設けられた開口部を示す。第１の絶縁膜６ａは、図５に示される絶縁膜６と同一のものであり、第２の絶縁膜６ｂは、図２に示される絶縁膜６と同一のものである。

【００４４】実施例４においては、実施例２と同様に、ガラス基板１の全面に第１の透明導電膜５ａ（図９には図示されていない）が設けられる。さらに、実施例１と同様に、テーパ配線部の上方に第２の透明導電膜５ｂが設けられる。なお、実施例３と同様に、第２の透明導電膜５ｂがソース外部接続端子を形成する箇所にも形成され、ソース外部接続端子として機能する。

【００４５】図９および図１０に示される構造においては、２層の透明導電膜（第１の透明導電膜５ａおよび第２の透明導電膜５ｂ）を設けることにより、実施例１および実施例２と比較してさらに電磁波を遮断することができる。

【００４６】また、図示されていないが、実施例１と同様に、金属製導線１１（図３参照）を設けてもよい。金属製導線を設けることにより、バックライトや周辺回路から発生している電磁波を、第２の透明導電膜５ａから、金属製導線１１および金属フレーム１０（図３参照）を経てグランドへ落とすことができる。したがって、バックライトや周辺回路から液晶表示パネルへの電磁波を大幅に低減し、ＥＭＩを改善することできる。その結果、ＥＭＩ対策のためにＬＣＤの構造が複雑化することを抑制できる。

【００４７】

【発明の効果】本発明によれば、透明導電膜を設けて電磁波を遮断することにより、周辺回路やバックライトなどから液晶表示パネルへの電磁波を大幅に低減することができる。さらに、透明導電膜を金属製導線に電気的に接続することにより電磁波を除去することができるので、ＥＭＩ対策のためにＬＣＤの構造を複雑化することなく、容易に電磁波を低減することができる。

【図面の簡単な説明】

【図１】本発明の液晶表示装置の実施例１にかかわるアクティブマトリクス基板の一例を示す説明図である。

【図２】図１のアクティブマトリクス基板のうちテーパ配線部および該テーパ配線部の周辺部を示す拡大断面説明図である。

【図３】本発明の液晶表示装置の実施例１にかかわる液晶表示パネルおよび該液晶表示パネルの周辺部の一例を示す説明図である。

【図４】本発明の液晶表示装置の実施例２にかかわるアクティブマトリクス基板の一例を示す説明図である。

【図５】図４のアクティブマトリクス基板のうちテーパ配線部および該テーパ配線部の周辺部を示す拡大断面説明図である。

【図６】本発明の液晶表示装置の実施例２にかかわる液晶表示パネルおよび該液晶表示パネルの周辺部の一例を示す説明図である。図６において、図４および図５と同一の箇所は同じ符号を用いて示す。

【図７】本発明の液晶表示装置の実施例３にかかわるアクティブマトリクス基板の一例を示す説明図である。

【図８】図７のアクティブマトリクス基板のうち周辺端子部を示す部分拡大説明図である。

【図９】本発明の液晶表示装置の実施例４にかかわるアクティブマトリクス基板の一例を示す説明図である。

【図１０】図９のアクティブマトリクス基板のうちテーパ配線部および該テーパ配線部の周辺部を示す拡大断面説明図である。

【図１１】従来のアクティブマトリクス基板の一例を示す説明図である。

【符号の説明】

１　ガラス基板
２ａ　ソース配線
２ｂ　ゲート配線
２ｃ　Ｃｓ配線
３ａ　ソース外部接続端子
３ｂ　ゲート外部接続端子
３ｃ　Ｃｓ外部接続端子
４　テーパ配線部
５　透明導電膜
９　表示部

１２　周辺端子部

【図１】

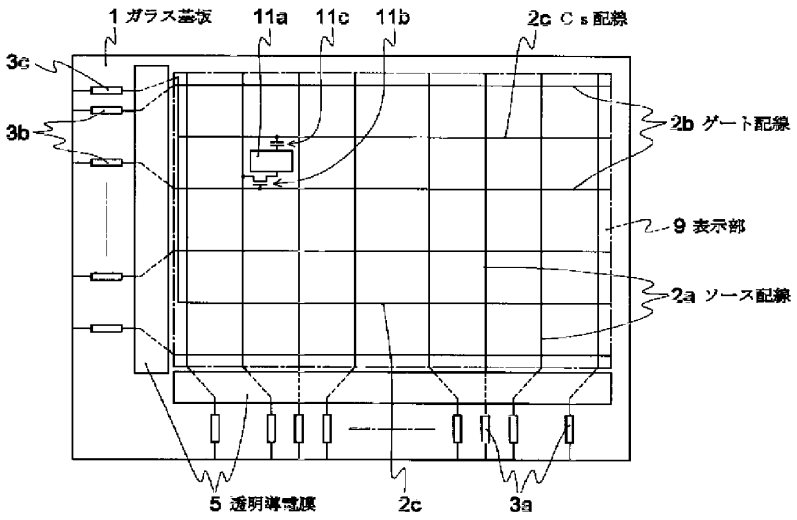

【図２】

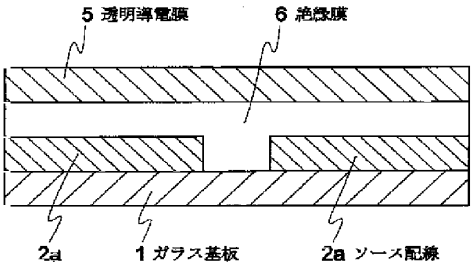

【図３】

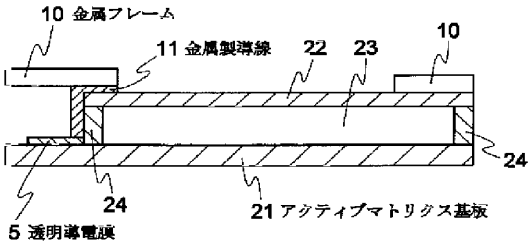

【図５】

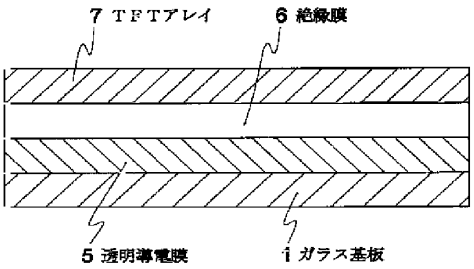

【図６】

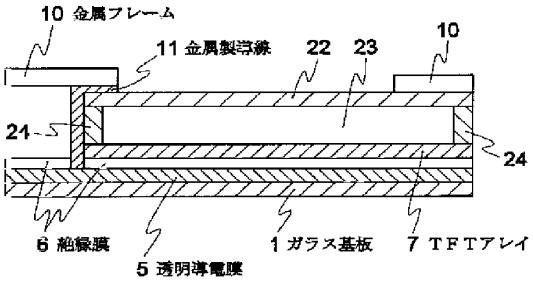

【図４】

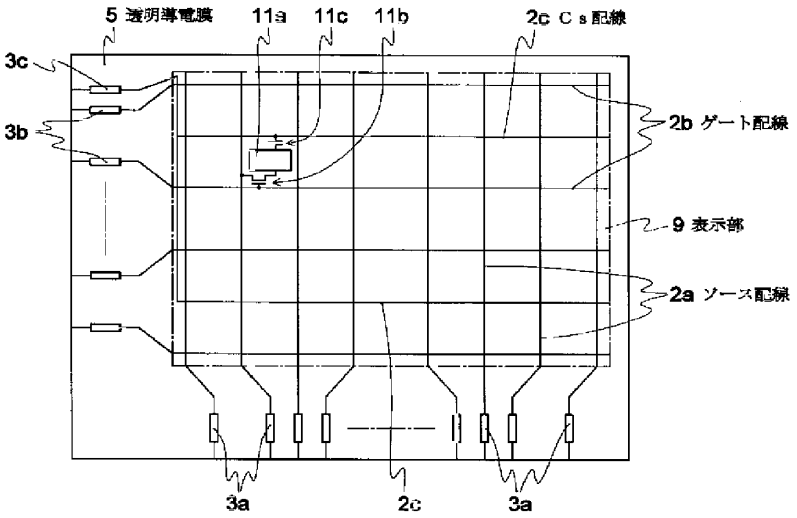
5 透明導電膜
11a
11c
11b
2c Ｃｓ配線
3c
3b
2b ゲート配線
9 表示部
2a ソース配線
3a
2c
3a

【図７】

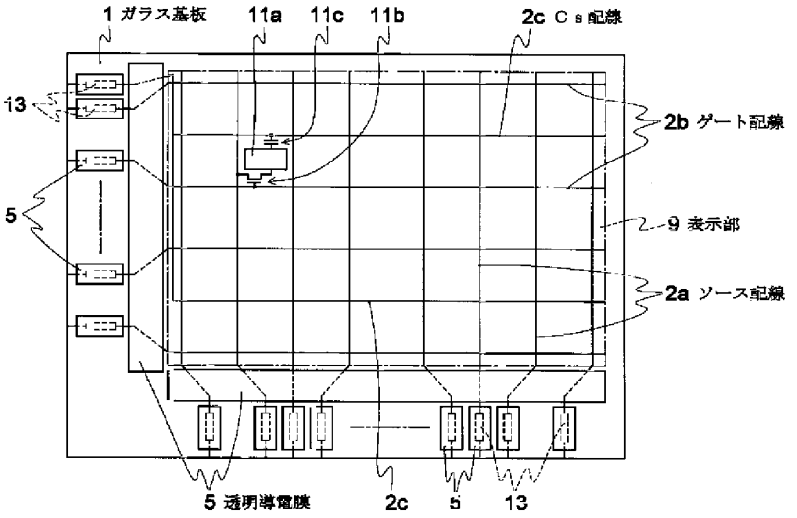
1 ガラス基板
11a
11c
11b
2c Ｃｓ配線
13
2b ゲート配線
5
9 表示部
2a ソース配線
5 透明導電膜
2c
5
13

【図８】

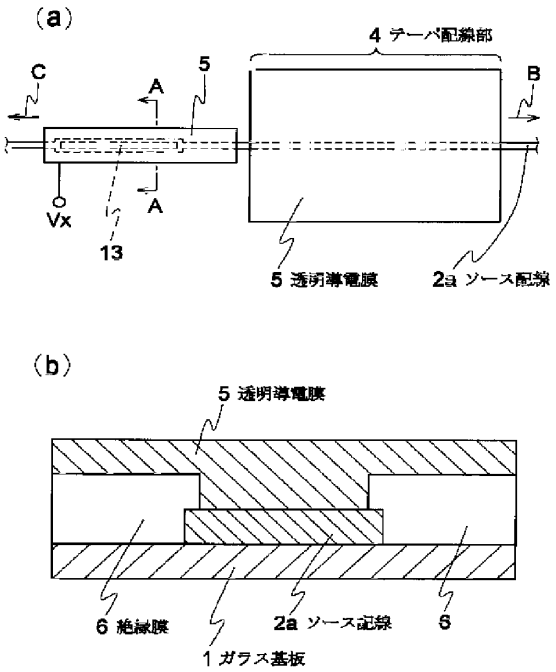
(a)
4 テーパ配線部
C
A
5
B
Vx
13
A
5 透明導電膜
2a ソース配線
(b)
5 透明導電膜
6 絶縁膜
2a ソース配線
6
1 ガラス基板

【図１０】

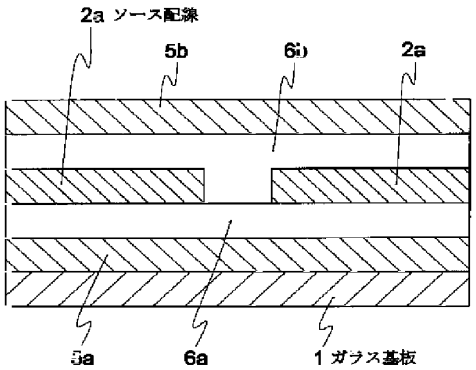
2a ソース配線
5b
6b
2a
5a
6a
1 ガラス基板

【図９】

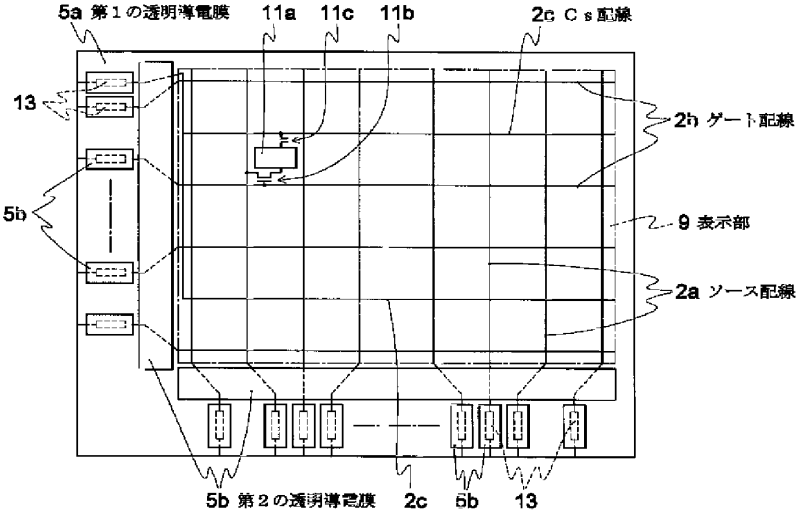
5a 第１の透明導電膜
11a
11c
11b
2c Ｃｓ配線
13
2b ゲート配線
5b
9 表示部
2a ソース配線
5b 第２の透明導電膜
2c
5b
13

【図１１】

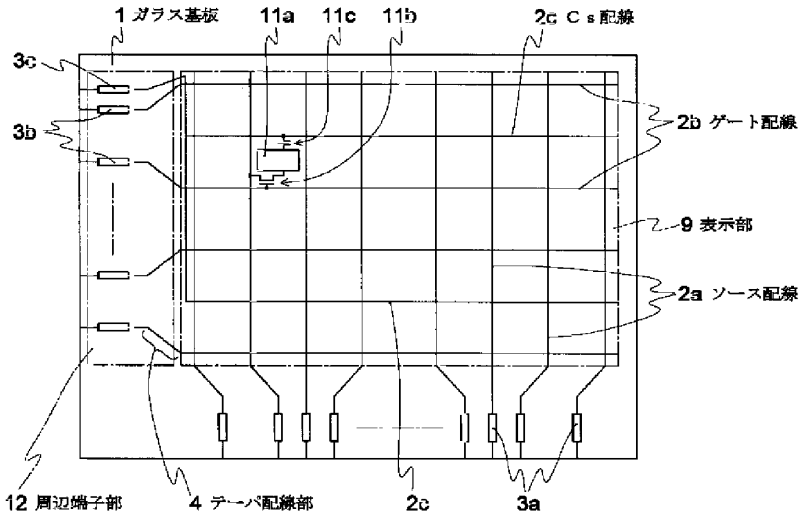
1 ガラス基板
11a
11c
11b
2c Ｃｓ配線
3c
3b
2b ゲート配線
9 表示部
2a ソース配線
12 周辺端子部
4 テーパ配線部
2c
3a

HERMETICALLY SEALED ENCLOSURE FOR PLANAR DISPLAY DEVICE

Publication number: JP2002158475 (A)
Publication date: 2002-05-31
Inventor(s): SHIMONO YOSHIO; NISHIMURA KAZUMASA
Applicant(s): FUJITSU GENERAL LTD
Classification:
- international: ***F24F5/00; G09F9/00; H05K7/20;*** **F24F5/00; G09F9/00; H05K7/20;** (IPC1-7): H05K7/20; F24F5/00; G09F9/00
- European:
Application number: JP20000352865 20001120
Priority number(s): JP20000352865 20001120

Abstract of **JP 2002158475 (A)**

PROBLEM TO BE SOLVED: To provide a hermetically sealed enclosure for planar display device that is made to be inexpensive by housing a commercially available ordinary planar display device together with an air conditioner and can be installed to any location. SOLUTION: This hermetically sealed enclosure 20 is divided into an upper housing chamber 20a and a lower housing chamber 20b having a hermetically sealed display window 25 in its front face by a partition wall 21. The enclosure 20 has a display window 1a facing the window 25 in its front face, a plurality of suction openings 1b in the lower parts of its back face, and a plurality of supply openings 1c in the upper part of its back face. In this enclosure 20, the planar display device 10 provided with a plurality of fans 5 correspondingly to the supply openings 1c is housed in the lower housing chamber 20b. In addition, the integrated air conditioner 30 which sucks and cools the air warmed by the display device 10 and discharged into the chamber 20b by means of the fans 5 and circulates the cooled air by blowing the cooled air into the chambers 20b is put in position in the upper housing chamber 20a.

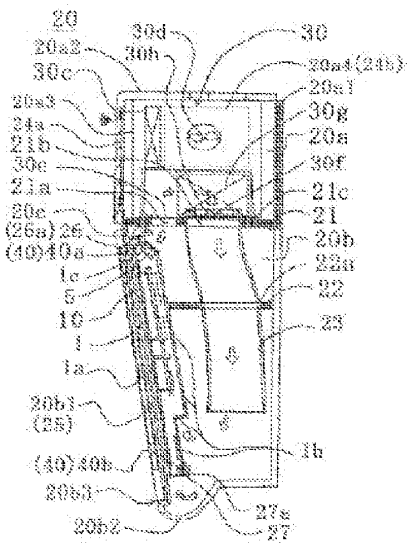

Data supplied from the ***esp@cenet*** database — Worldwide

SEC et al. v. MRI
SEC Exhibit 1020.0121
IPR2023-00255

(19)日本国特許庁（ＪＰ）　(12) 公開特許公報（Ａ）　(11)特許出願公開番号
特開2002－158475
（P2002－158475A）
(43)公開日　平成14年５月31日(2002.5.31)

(51)Int.Cl.⁷	識別記号	ＦＩ	テーマコード(参考)
Ｈ０５Ｋ　7/20		Ｈ０５Ｋ　7/20	Ｈ　５Ｅ３２２
			Ｃ　５Ｇ４３５
			Ｑ
Ｆ２４Ｆ　5/00		Ｆ２４Ｆ　5/00	Ａ
Ｇ０９Ｆ　9/00	３０４	Ｇ０９Ｆ　9/00	３０４Ｂ

審査請求　未請求　請求項の数13　ＯＬ　（全 ６ 頁）　最終頁に続く

(21)出願番号　特願2000－352865(P2000－352865)
(22)出願日　平成12年11月20日(2000.11.20)

(71)出願人　000006611
株式会社富士通ゼネラル
神奈川県川崎市高津区末長1116番地
(72)発明者　下野　吉夫
川崎市高津区末長1116番地　株式会社富士通ゼネラル内
(72)発明者　西村　一正
川崎市高津区末長1116番地　株式会社富士通ゼネラル内

Ｆターム(参考)　5E322 BA01 BA03 BA05 BB03 BB10 DB02 FA01
5G435 AA12 AA18 BB06 CC09 EE02 EE08 EE13 GG43 GG44

(54)【発明の名称】　平面表示装置用密閉筐体

(57)【要約】
【課題】　空気調和機と一般市販の平面表示装置を同一密閉筐体内に収容することにより安価で、しかも設置場所の問題のない平面表示装置用密閉筐体を提供すること。
【解決手段】　密閉筐体２０を隔壁２１により上部収容室２０ａと前面に表示窓２５を密閉的に設けた下部収容室２０ｂとに区画し、前記下部収容室に、前面に前記表示窓に対向する表示窓１ａと、背面下部に複数の吸込口１ｂと、背面上部に複数の吹出口１ｃとを設けた筐体１内に、前記吹出口に対応する複数の送風機５を設けてなる平面表示装置１０を収容する一方、前記上部収容室に、前記平面表示装置により温められ前記送風機により前記下部収容室内に排出される空気を吸込んで冷却し、同下部収容室内に送風して循環する一体型空気調和機３０を配置した。

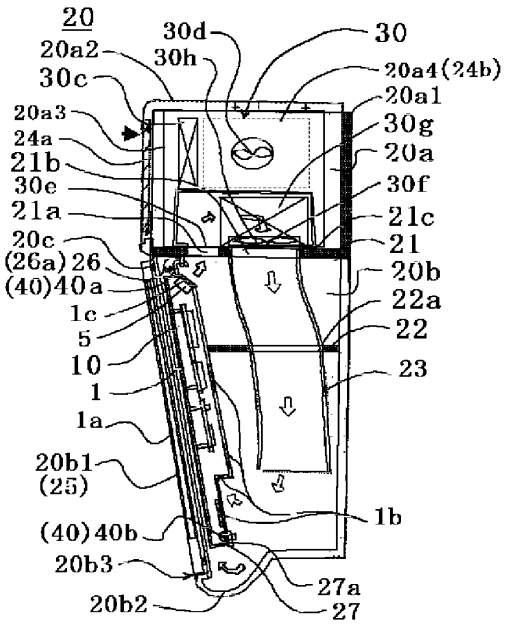

SEC et al. v. MRI
SEC Exhibit 1020.0122
IPR2023-00255

【特許請求の範囲】

【請求項１】　密閉筐体を隔壁により上部収容室と前面に表示窓を密閉的に設けた下部収容室とに区画し、前記下部収容室に、前面に前記表示窓に対向する表示窓と、背面下部に複数の吸込口と、背面上部に複数の吹出口とを設けた筐体内に、前記吹出口に対応する複数の送風機を設けてなる平面表示装置を収容する一方、前記上部収容室に、前記平面表示装置により温められ前記送風機により前記下部収容室内に排出される空気を吸込んで冷却し、同下部収容室内に送風して循環する冷却装置を配置してなることを特徴とする平面表示装置用密閉筐体。

【請求項２】　前記冷却装置を一体型空気調和機としたことを特徴とする請求項１記載の平面表示装置用密閉筐体。

【請求項３】　前記密閉筐体の前記上部収容室の前面に、前記一体型空気調和機に備える外気吸込口に連通する外部吸込口を、一側面に、同外部吸込口を介して前記外気吸込口より吸込まれ放熱用熱交換器で温められた温風を排出する外気吹出口に連通する外部吹出口を設けてなることを特徴とする請求項２記載の平面表示装置用密閉筐体。

【請求項４】　前記外部吸込口及び外部吹出口に上方を奥側に傾斜する複数の横桟でなる吸込グリル及び吹出グリルをそれぞれ設けたことを特徴とする請求項３記載の平面表示装置用密閉筐体。

【請求項５】　前記隔壁に前記平面表示装置の吹出口に対応する第１通風孔と、吸込口に対応する第２通風孔とを設け、前記第１通風孔に、前記冷却装置の下面に備え前記吹出口から前記下部収容室内に排出される温風を吸込む内部吸込口を、前記第２通風孔に、前記冷却装置の下面に備え前記内部吸込口から吸込まれ冷却用熱交換器により冷却された冷気を吹出す内部吹出口を連通してなることを特徴とする請求項１または請求項２記載の平面表示装置用密閉筐体。

【請求項６】　前記第２通風孔に、前記平面表示装置の吸込口近傍に連通するダクトを設けたことを特徴とする請求項５記載の平面表示装置用密閉筐体。

【請求項７】　前記下部収容室に、同下部収容室を前記平面表示装置の吸込口側と吹出口側とに区画する仕切板を設け、同仕切板に前記ダクトを貫通して支持する貫通孔を設けたことを特徴とする請求項６記載の平面表示装置用密閉筐体。

【請求項８】　前記密閉筐体の下部収容室前面を開口し、同開口部に開閉可能に密閉的に前面パネルを設け、同前面パネルに前記表示窓を設けたことを特徴とする請求項１または請求項２記載の平面表示装置用密閉筐体。

【請求項９】　前記開口部の前記前面パネルとの接触面にシール材を添着したことを特徴とする請求項８記載の平面表示装置用密閉筐体。

【請求項１０】　前記隔壁の下面前方に、係止孔を有する係止部を、前記密閉筐体の下部両側面前方にネジ孔を有する取付部を設ける一方、前記平面表示装置を、上部に前記係止孔に対応する係止爪を備え、下部に前記ネジ孔に対応する取付孔を備える取付補助具に固定してなることを特徴とする請求項８記載の平面表示装置用密閉筐体。

【請求項１１】　前記平面表示装置が、同平面表示装置の表示窓と前記密閉筐体の表示窓との間に冷気が通風される隙間を設けて配置されるように取付けられてなることを特徴とする請求項１または請求項１０記載の平面表示装置用密閉筐体。

【請求項１２】　前記密閉筐体の底面が、円弧状に形成されてなることを特徴とする請求項１１記載の平面表示装置用密閉筐体。

【請求項１３】　前記冷却装置の送風機の送風量を前記平面表示装置の送風機の送風量の略２倍としたことを特徴とする請求項１記載の平面表示装置用密閉筐体。

【発明の詳細な説明】

【０００１】

【発明の属する技術分野】本発明は、ＰＤＰ等の平面表示装置を収容して街頭等で使用される平面表示装置用密閉筐体に係わり、とくに平面表示装置の取付と放熱に関する。

【０００２】

【従来の技術】プラズマディスプレイパネルを使用した平面表示装置１０は、図３に示すように、前面に表示窓１ａを備え、背面下部に複数の吸込口１ｂ、背面上部に複数の吹出口１ｃを備える筐体１内に、前記表示窓１ａに臨ませたプラズマディスプレイパネル（ＰＤＰ）２と、同ＰＤＰ２を制御駆動する制御基板３と、同制御基板３に電力を供給する電源基板４と、前記吹出口１ｃに対応配置される複数の送風機５とを配設している。この平面表示装置１０は雨風の影響が無く、比較的塵埃の少ない室内で使用するように設計されているため、このままでは、これを街頭等、塵埃が多く、風雨の影響を受け易い屋外で使用することは出来ない。そこで、特開平９－３０７２５７に開示され、図５に示すように、前記筐体１内に冷凍サイクルの冷却器６を配置し、外部に設けた前記冷凍サイクルの放熱装置５０から同冷却器６に冷媒管４１を接続し、同冷媒管４１を通して冷媒を循環することにより筐体１内の空気を冷却し、同冷風を筐体１内部に循環することにより、前記筐体１を密閉構造として街頭等、塵埃が多く、風雨の影響を受け易い屋外でも使用できるようにしたものがある。しかし、この構成では、筐体１を専用に設計しなければならないため、高価になるばかりか、外部に専用の放熱装置５０が必要となり、この放熱装置５０の設置場所が問題となっていた。

【０００３】

【発明が解決しようとする課題】本発明は以上述べた問

題点を解決し、冷却装置と一般市販の平面表示装置を同一密閉筐体内に収容することにより安価で、しかも、設置場所の問題のない平面表示装置用密閉筐体を提供することを目的としている。

【０００４】

【課題を解決するための手段】本発明は上述の課題を解決するため、密閉筐体を隔壁により上部収容室と前面に表示窓を密閉的に設けた下部収容室とに区画し、前記下部収容室に、前面に前記表示窓に対向する表示窓と、背面下部に複数の吸込口と、背面上部に複数の吹出口とを設けた筐体内に、前記吹出口に対応する複数の送風機を設けてなる平面表示装置を収容する一方、前記上部収容室に、前記平面表示装置により温められ前記送風機により前記下部収容室内に排出される空気を吸込んで冷却し、同下部収容室内に送風して循環する冷却装置を配置してなる平面表示装置用密閉筐体としている。

【０００５】前記冷却装置を一体型空気調和機とした平面表示装置用密閉筐体としている。

【０００６】前記密閉筐体の前記上部収容室の前面に、前記一体型空気調和機に備える外気吸込口に連通する外部吸込口を、一側面に、同外部吸込口を介して前記外気吸込口より吸込まれ放熱用熱交換器で温められた温風を排出する外気吹出口に連通する外部吹出口を設けてなる平面表示装置用密閉筐体としている。

【０００７】前記外部吸込口及び外部吹出口に上方を奥側に傾斜する複数の横桟でなる吸込グリル及び吹出グリルをそれぞれ設けた平面表示装置用密閉筐体としている。

【０００８】前記隔壁に前記平面表示装置の吹出口に対応する第１通風孔と、吸込口第２通風孔とを設け、前記第１通風孔に、前記冷却装置の下面に備え前記吹出口から前記下部収容室内に排出される温風を吸込む内部吸込口を、前記第２通風孔に、冷却装置の下面に備え前記内部吸込口から吸込まれ冷却用熱交換器により冷却された冷気を吹出す内部吹出口を連通してなる平面表示装置用密閉筐体としている。

【０００９】前記第２通風孔に前記平面表示装置の吸込口近傍に連通するダクトを設けた平面表示装置用密閉筐体としている。

【００１０】前記下部収容室に、同下部収容室を前記平面表示装置の吸込口側と吹出口側とに区画する仕切板を設け、同仕切板に前記ダクトを貫通して支持する貫通孔を設けた平面表示装置用密閉筐体としている。

【００１１】前記密閉筐体の下部収容室前面を開口し、同開口部に開閉可能に密閉的に前面パネルを設け、同前面パネルに前記表示窓を設けた平面表示装置用密閉筐体としている。

【００１２】前記開口部の前記前面パネルとの接触面にシール材を添着した平面表示装置用密閉筐体としている。

【００１３】前記隔壁の下面前方に、係止孔を有する係止部を、前記密閉筐体の下部両側面前方にネジ孔を有する取付部を設ける一方、前記平面表示装置を、上部に前記係止孔に対応する係止爪を備え、下部に前記ネジ孔に対応する取付孔を備える取付補助具に固定してなる平面表示装置用密閉筐体としている。

【００１４】前記平面表示装置が、同平面表示装置の表示窓と前記密閉筐体の表示窓との間に冷気が通風される隙間を設けて配置されるように取付けられてなる平面表示装置用密閉筐体としている。

【００１５】前記密閉筐体の底面が、円弧状に形成されてなる平面表示装置用密閉筐体としている。

【００１６】前記空気調和機の送風機の送風量を前記平面表示装置の送風機の送風量の略２倍とした平面表示装置用密閉筐体としている。

【００１７】

【発明の実施の形態】以下、図面に基づいて本発明による平面表示装置用密閉筐体を詳細に説明する。図１は本発明による平面表示装置用密閉筐体の一実施例を示す要部側断面図、図２は本発明による平面表示装置用密閉筐体の上方より見た要部透視図、図３は平面表示装置の要部側断面図、図４は冷却装置の一例としての一体型空気調和機の外観斜視透視図である。図において、２０は密閉筐体、１０は平面表示装置、３０は一体型空気調和機である。図３に示すように、前記平面表示装置１０の筐体１は、前面に表示窓１ａを備える前面パネル１１と、前面開口部に同前面パネル１１が装着され、背面下部に複数の吸込口１ｂ、背面上部に複数の吹出口１ｃを備える後部筐体１２とで構成されている。この筐体１内に、前記表示窓１ａに臨ませたプラズマディスプレイパネル（ＰＤＰ）２と、同ＰＤＰ２を制御駆動する制御基板３と、同制御基板３に電力を供給する電源基板４と、前記吹出口１ｃに対応配置される複数の送風機５とを配設している。

【００１８】図４に示すように、前記一体型空気調和機３０は、前面に外気を吸込む外気吸込口３０ａ、側面に外気吹出口３０ｂを備えている。また、下面一側には前記平面表示装置１０からの温風を吸込む内部吸込口３０ｅ、下面他側には内部吹出口３０ｆを備えている。この外気吸込口３０ａより吸込まれた空気は放熱用熱交換器３０ｃの熱を奪い、この温められた温風を外気用送風機３０ｄにより外気吹出口３０ｂから吹出すようになっている。また、前記内部吸込口３０ｅから吸込まれた前記平面表示装置１０からの温風は冷却用熱交換器３０ｇにより熱を奪われて冷却され、この冷気を内気用送風機３０ｈにより内部吹出口３０ｆから吹出すようになっている。また、図示しないが、内部には前記放熱用熱交換器３０ｃ、冷却用熱交換器３０ｇとで冷凍サイクルを構成する冷媒を圧縮する圧縮機と、絞り機構とが配設されている。

【0019】図1及び図2に示すように、密閉筐体20は隔壁21により上部収容室20aと、下部収容室20bとに区画されている。この下部収容室20bには取付補助具40に取付けられた前記平面表示装置10が配設されており、上部収容室20aには前記一体型空気調和機30が配設されている。前記下部収容室20bの前記平面表示装置10の背面側の前記吸込口1bと吹出口1cとの間には貫通孔22aを備える仕切板22が設けられている。また、前記隔壁21には上面周縁に合成ゴム等のシール材21cを添着した第1通風孔21aと、第2通風孔21bとが形成されている。前記第1通風孔21aの上部には、前記一体型空気調和機30の内部吸込口30eが前記シール材21cにより密閉的に連通され、下部には前記平面表示装置10の吹出口1cが臨まされている。また、前記第2通風孔21bの上部には、前記一体型空気調和機30の内部吹出口30fが前記シール材21cにより密閉的に連通され、下部にはダクト23が接続され、同ダクト23は前記仕切板22の貫通孔22aを貫通して支持され前記平面表示装置10の吸込口1b近傍まで延出されている。このように、一体型空気調和機30から吹出された冷気は、ダクト23を通して仕切板22の下側の前記平面表示装置10の吸込口1b側に導入されるため、この冷気が直接前記内部吸込口30eに戻る、所謂ショートサーキットを防止するように構成されている。

【0020】また、前記密閉筐体20の上側の前記上部収容室20aを形成する部分は、背面と側面を形成する背面板20a1と、天面と前面を形成する前面板20a2とで構成され、前記前面板20a2が開閉可能に前記背面板20a1に取付けられている。そして、前記上部収容室20aの前面には前記一体型空気調和機30の前記外気吸込口30aに対応する外部吸込口20a3が設けられ、側面には前記外気吹出口30bにダクト31で接続される外部吹出口20a4が設けられている。前記外部吸込口20a3および、外部吹出口20a4には上方を奥側に傾斜する複数の横桟でなる吸込グリル24a及び吹出グリル24bが形成されており、風雨に耐えられるようになっている。

【0021】前記上部収容室20aに前記一体型空気調和機30を配設するには、前記前面板20a2を開放した後、一体型空気調和機30の前記内部吸込口30eと内部吹出口30fをそれぞれ前記隔壁21の前記第1通風孔21aと前記第2通風孔21bに合せて前記隔壁21の上に乗せてボルトで固定する。つぎに、前記一体型空気調和機30の前記外気吹出口30bと上部収容室20aの側面の外部吹出口20a4を前記ダクト31で接続する。そして、前記前面板20a2を閉じることにより一体型空気調和機30の配設を完了する。

【0022】また、前記密閉筐体20の下側の下部収容室20bの前面に開口部20b3を設け、同開口部20b3に、強化ガラスを嵌めた表示窓25を有する前面パネル20b1を、その上端に設けたヒンジにより上方開閉可能に取付け、開口部20b3の下部には前面パネル20b1のロック機構が設けられており、鍵をかけて管理できるようにしている。そして、前記開口部20b3の前面周縁、前記前面パネル20b1の接触部分には合成ゴム等のシール材20cが添着され、密閉性を維持するようにしている。前記隔壁21の下面前方に係止孔26aを有する係止部26が設け、前記密閉筐体20の両側面下部に、ネジ孔27aを有する取付部27を設けている。一方、前記平面表示装置10を前記密閉筐体20内に取付けるための前記取付補助具40の上部両側には前記係止孔26aに係止される係止爪40aが形成されており、下部両側には前記ネジ孔27aに対応する取付孔40bが設けられている。

【0023】前記下部収容室20bに前記平面表示装置10を配設するには、まず、前記平面表示装置10を図示しないボルトで前記取付補助具40に取付け、つぎに、前記前面パネル20b1を開放した後、この平面表示装置10を取付けた取付補助具40の係止爪40aを前記係止部26の係止孔26aに係止し、前記取付孔40bから前記ネジ孔27aにネジを螺着して固定することにより、前記平面表示装置10を下部収容室20bに配置している。そして、前記前面パネル20b1を閉じて鍵をかけることにより、前記平面表示装置10が密閉筐体20内に密閉される。このように、前記前面パネル20b1を開閉可能とすることにより、前記平面表示装置10の据付性、メンテナンス性を良くしてる。また、平面表示装置10を取付けた取付補助具40の係止爪40aを前記係止部26の係止孔26aに係止することにより、取付作業性を良好とすることができる。また、この時、前記平面表示装置10の表示窓1aと前記密閉筐体20の前記前面パネル20b1の表示窓25との間に冷気が通風される隙間を設けるようにしているので、冷気が平面表示装置10の表示窓1aに流通し、同表示窓1aに臨ませた発熱するPDP2を効率良く冷却することができる。そして、前記密閉筐体20の底面20b2は円弧状に形成されており、ダクト23から吹出される冷気が前記前面パネル20b1側に流通し易くしている。

【0024】以上の構成において、つぎにその動作を説明する。まず、一体型空気調和機30の動作を説明する。前記圧縮機により圧縮されて高温高圧となった代替フロン等の冷媒は放熱用熱交換器30cにおいて外気吸込口30aより吸込まれた外気と熱交換して凝縮される。この凝縮された冷媒は絞り機構を介して冷却用熱交換器30gで蒸発して低温冷媒となり、前記内部吸込口30eから吸込まれた前記平面表示装置10からの温風と熱交換して圧縮機に循環される。一方、前記外気吸込口30aより吸込まれた外気は放熱用熱交換器30cに

て温められて温風となり、外気用送風機３０ｄにより外気吹出口３０ｂから外部に吹出される。また、前記内部吸込口３０ｅから吸込まれた前記平面表示装置１０からの温風は冷却用熱交換器３０ｇにて冷却されて冷風となり、内気用送風機３０ｈにより内部吹出口３０ｆから吹出される。こうして内部吹出口３０ｆから吹出された冷風はダクト２３により下部収容室に導入され前記平面表示装置１０の複数の吸込口１ｂ近傍に吹出される。

【００２５】つぎに、前記平面表示装置１０の動作を説明する。前記ダクト２３により吹出される冷風の一部は前記複数の吸込口１ｂから筐体１内下側に導入される。筐体１内下側に導入された冷気は前記ＰＤＰ２、制御基板３及び、電源基板４から発熱される熱を奪って温められながら上方に導かれ、複数の送風機５により複数の吹出口１ｃから吹出され、前記内部吸込口３０ｅに循環される。

【００２６】前記ダクト２３により吹出される冷風の他の一部は、前記筐体１の周囲に導かれると共に、前記密閉筐体２０の底面２０ｂ２の円弧状の底面により折り返されて、前記平面表示装置１０の表示窓１ａと前記密閉筐体２０の前記前面パネル２０ｂ１の表示窓２５との間の隙間に通風され、前記ＰＤＰ２により温められた筐体１の外側から冷やすようにしている。そして、筐体１を冷やして温められた空気は前記内部吸込口３０ｅに循環される。実験結果から、前記一体型空気調和機３０の内部吹出口３０ｆから吹出される冷風の風量を前記平面表示装置１０内を通風される風量の約２倍とすることにより、効率よく平面表示装置１０を冷やすことができる。

【００２７】

【発明の効果】以上説明したように、本発明による平面表示装置用密閉筐体によれば、密閉筐体を隔壁により上部収容室と前面に表示窓を密閉的に設けた下部収容室とに区画し、前記下部収容室に、前面に前記表示窓に対向する表示窓と、背面下部に複数の吸込口と、背面上部に複数の吹出口とを設けた筐体内に、前記吹出口に対応する複数の送風機を設けてなる平面表示装置を収容する一方、前記上部収容室に、前記平面表示装置により温められ前記送風機により前記下部収容室内に排出される空気を吸込んで冷却し、同下部収容室内に送風して循環する冷却装置を配置してなる平面表示装置用密閉筐体としたので、冷却装置と一般市販の平面表示装置を同一密閉筐体内に収容することにより安価で、しかも設置場所の問題のない平面表示装置用密閉筐体を提供することができる。

【図面の簡単な説明】

【図１】本発明による平面表示装置用密閉筐体の一実施例を示す要部側断面図である。

【図２】本発明による平面表示装置用密閉筐体の一実施例を示す上方より見た要部透視図である。

【図３】本発明による平面表示装置用密閉筐体の平面表示装置を示す要部側断面図である。

【図４】本発明による平面表示装置用密閉筐体の一体型空気調和機の外観斜視透視図である。

【図５】従来の平面表示装置用密閉筐体を示す要部側断面図である。

【符号の説明】

１　平面表示装置１０の筐体
１ａ　表示窓
１ｂ　吸込口
１ｃ　吹出口
２　プラズマディスプレイパネル（ＰＤＰ）
３　制御基板
４　電源基板
５　送風機
１０　平面表示装置
１１　前面パネル
１２　後部筐体
２０　密閉筐体
２０ａ　上部収容室
２０ａ１　背面板
２０ａ２　前面板
２０ａ３　外部吸込口
２０ａ４　外部吹出口
２０ｂ　下部収容室
２０ｂ１　前面パネル
２０ｂ２　底面
２０ｂ３　開口部
２０ｃ　シール材
２１　隔壁
２１ａ　第１通風孔
２１ｂ　第２通風孔
２１ｃ　シール材
２２　仕切板
２２ａ　貫通孔
２３　ダクト
２４ａ　吸込グリル
２４ｂ　吹出グリル
２５　表示窓
２６　係止部
２６ａ　係止孔
２６ａ　ネジ孔
２７　取付部
３０　一体型空気調和機
３０ａ　外気吸込口
３０ｂ　外気吹出口
３０ｃ　放熱用熱交換器
３０ｄ　外気用送風機
３０ｅ　内部吸込口
３０ｆ　内部吹出口
３０ｇ　冷却用熱交換器

３０ｈ　内気用送風機
３１　ダクト
４０　取付補助具
４０ａ　係止爪
４０ｂ　取付孔

【図１】

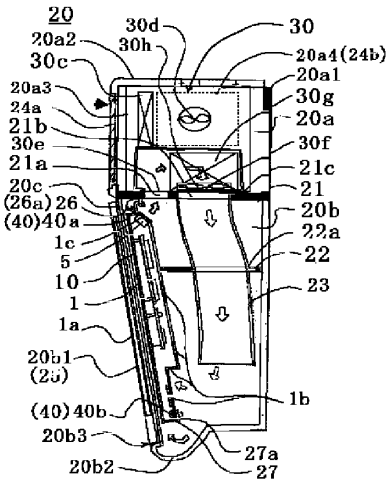

【図２】

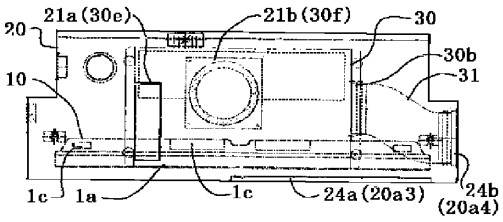

【図３】

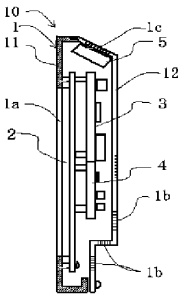

【図５】

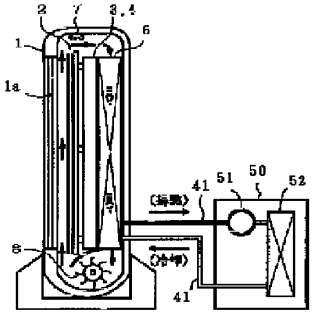

【図４】

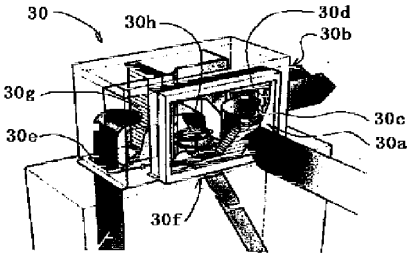

フロントページの続き

(51)Int.Cl.⁷	識別記号	ＦＩ	(参考)
Ｇ０９Ｆ　9/00	３５０	Ｇ０９Ｆ　9/00	３５０Ｚ

INFORMATION DISPLAY DEVICE

Publication number: JP2005134849 (A)
Publication date: 2005-05-26
Inventor(s): MIZUNO YOSHINAO; OOTSUKA HISANARI
Applicant(s): NAGOYA ELECTRIC WORKS CO LTD
Classification:
- international: ***F25D1/00; G09F9/00; H05K7/20;*** **F25D1/00; G09F9/00; H05K7/20;** (IPC1-7): G09F9/00; F25D1/00; H05K7/20
- European:
Application number: JP20030373769 20031031
Priority number(s): JP20030373769 20031031

Abstract of **JP 2005134849 (A)**

PROBLEM TO BE SOLVED: To provide an information display device in which temperature inside a casing is efficiently managed and the contamination of a filter due to introduction of outside air is reduced by opening an inlet port and an exhaust port to introduce outside air and cool inside the casing when the temperature inside the casing gets high, and by closing the inlet port and the exhaust port to make the air circulate inside the casing to cool inside when the temperature inside the casing falls and is not so high as to introduce outside air. ;
SOLUTION: The information display device is constituted of: the casing 1 in which a transparent board 2, a display element 3 and an electric circuit section 5 are arranged so that at least two air passages are formed; the inlet port 8 formed in the casing to introduce outside air; the exhaust port 9 to exhaust the air which passes through the passage in the casing to the outside; a fan 10 to introduce outside air through the inlet port and exhaust the air through the exhaust port to the outside; air flow direction control plates 11 and 12 attached to the inlet port and the exhaust port so as to close and open the ports, and a driving mechanism 13 which controls the air flow direction control plates to be simultaneously in open state and closed state. ; COPYRIGHT: (C)2005,JPO&NCIPI

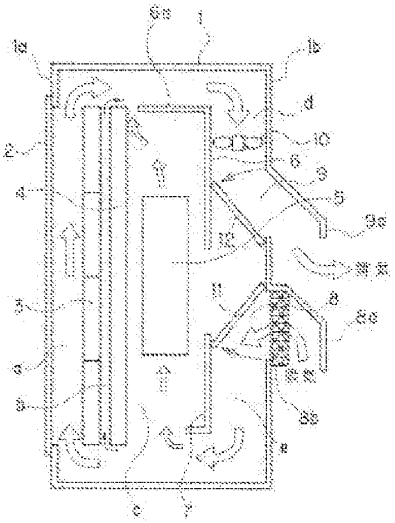

Data supplied from the ***esp@cenet*** database — Worldwide

SEC et al. v. MRI
SEC Exhibit 1020.0128
IPR2023-00255

(19) 日本国特許庁(JP)　(12) 公開特許公報(A)　(11) 特許出願公開番号
特開2005-134849
(P2005-134849A)
(43) 公開日　平成17年5月26日(2005.5.26)

(51) Int.Cl.[7]		F I			テーマコード（参考）
G09F	9/00	G09F	9/00	304B	3L044
F25D	1/00	F25D	1/00	B	5E322
H05K	7/20	H05K	7/20	G	5G435
		H05K	7/20	H	

審査請求 未請求　請求項の数 5　OL　（全 9 頁）

(21) 出願番号　特願2003-373769 (P2003-373769)
(22) 出願日　平成15年10月31日 (2003.10.31)

(71) 出願人　000243881
名古屋電機工業株式会社
愛知県名古屋市中川区横堀町１丁目３６番地
(74) 代理人　100082669
弁理士　福田　賢三
(74) 代理人　100095337
弁理士　福田　伸一
(74) 代理人　100061642
弁理士　福田　武通
(74) 代理人　100095061
弁理士　加藤　恭介
(72) 発明者　水野　芳直
愛知県海部郡美和町大字篠田字面徳２９－１　名古屋電機工業株式会社内

最終頁に続く

(54)【発明の名称】情報表示装置

(57)【要約】
【課題】　従来にあっては、筐体内が温度が上昇した場合には送風機を駆動して外気を筐体内に導入して冷却するものであるので、送風機の運転時間が長くなって外気を清浄化するためのフィルタが短期間で汚れるので、短期間でフィルタの交換を行う必要が発生し手間とコストが掛かるといった問題があった。
【解決手段】　空気の流路が少なくとも２つ以上形成されるように透明板２と表示素子３および電気回路部５とを配置した筐体１と、該筐体に形成された外気を導入する吸気口８と、前記筐体内の前記流路を通過した空気を外部に排出する排気口９と、前記吸気口から外気を導入し前記排気口から外部に排出させるためのファン１０と、前記吸気口および排気口に閉塞および開放可能に取付けられた風向制御板１１，１２と、該風向制御板を同時に開放状態と閉塞状態に制御する駆動機構１３とより構成した情報表示装置である。
【選択図】　図１

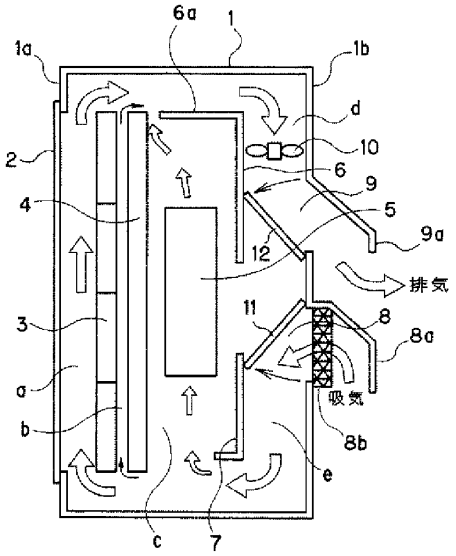

【特許請求の範囲】
【請求項1】
空気の流路が少なくとも２つ以上形成されるように透明板と表示ユニットおよび電気回路部とを配置した筐体と、該筐体に形成された外気を導入する吸気口と、前記筐体内の前記流路を通過した空気を外部に排気する排気口と、前記吸気口から外気を導入し前記排気口から外部に排気させるためのファンと、前記吸気口および排気口に閉塞および開放可能に取付けられた風向制御板と、該風向制御板を同時に開放状態と閉塞状態に制御する駆動機構とより構成し、前記風向制御板を開放することで外気を筐体内に導入、かつ、排気し、また、風向制御板を閉塞することで筐体内の空気を循環させるようにしたことを特徴とする情報表示装置。
【請求項2】
前記筐体に設けられる吸気口を筐体の背面板における下部位置の両側に２つ配置し、排気口を筐体の背面板における上部位置の中央部に１つ配置すると共に、１つのファンであっても筐体内の空気の淀みを防止したことを特徴する請求項１記載の情報表示装置。
【請求項3】
前記表示ユニットと前記透明板との間の流路に流れる前記吸気口よりの風量を、前記表示ユニットと前記電気回路部との間の流路に流れる風量より多くしたことを特徴とする請求項１記載の情報表示装置。
【請求項4】
前記駆動機構を駆動して前記風向制御板によって閉塞あるいは開放するタイミングを、前記筐体内に設けられた温度センサよりの出力により、あるいは、表示する表示素子の点灯率によって制御するようにしたことを特徴とする請求項１記載の情報表示装置。
【請求項5】
前記駆動機構は、モータによって回転するシャフトと、該シャフトと前記風向制御板とを接続し、かつ、前記シャフトの回転によって各風向制御板を同時に閉塞状態と開放状態とするリンクとで構成したことを特徴とする請求項１記載の情報表示装置。

【発明の詳細な説明】
【技術分野】
【0001】
本発明は文字や図柄等を表示して、走行中のドライバーに対して道路状況を知らしめて安全走行を促す道路情報表示装置等の情報表示装置であって、該情報表示装置におけるＬＥＤ等の表示素子から発生する熱や太陽光による熱によって、筐体内の温度が上昇するのを防止する情報表示装置に関する。
【背景技術】
【0002】
道路情報表示装置等の情報表示装置は一般的に野外に設置されるものであることから、雨等の侵入によって筐体内の表示素子を制御するための制御回路や電源回路等が誤動作しないように密閉状態になっている。また、表示素子をドットマトリックス状に配置した表示ユニットと筐体との隙間を防水構造としているが、表示ユニットを防水構造とするためにはコスト高になる等の理由から、近年では表示ユニットの前面に硝子等の透明板で覆った情報表示装置が使われるようになっている。このように、筐体内を完全な密閉状態とすると、前記表示素子からの熱や前記電気回路部分からの熱および太陽による直射熱によって筐体内の温度が高くなるという問題が発生していた。
【0003】
そこで、このような筐体内の温度を低下させるために、筐体内に筐体内の空気を循環させる装置および筐体内に外気を導入して冷却する装置の２つの方法の装置が提案されている。前記筐体内の空気を循環させる装置として実開平５－６６６７４号が、また、外気を導入する装置として特開２０００－３５６９５６号がある。
【0004】
前記筐体内の空気を循環させる技術は、筐体内を遮風幕によって循環させるための流路

を形成し、ファンによって空気を循環させることで表示ユニットを冷却するものであり、また、外気を導入する技術は、筐体の背面にフィルタが取付けられた吸気口を設置し、熱発生源の部分に空気の流れる流路を形成し、前記吸気口からファンによって導入した空気を前記流路を通過させた後に筐体の背面に設置された排気口から排気することで筐体内を冷却するものである。

【特許文献1】実開平５－６６６７４号公報

【特許文献2】特開２０００－３５６９５６号公報

【発明の開示】

【発明が解決しようとする課題】

【0005】

ところで、前記した筐体内の空気を循環させる技術にあっては、表示素子からの熱や電源ユニットを含む電気回路部分からの熱および太陽による直射熱によって筐体内の温度が非常に高くなった場合には、筐体内の空気を循環させるのみでは十分に筐体内を冷却することができずに、表示素子の輝度低下が早くなったり、電気回路が熱によって故障する等の問題があった。

【0006】

また、送風機を駆動することで外気を筐体内に導入して排気口から排気する技術にあっては、外気を導入する程の筐体内温度には達していない場合にも、排気口から汚れた空気を流入させないためファンを常時駆動しなければならず、従って、送風機の運転時間が長くなり、外気を清浄化するために設けられたフィルタが短期間で汚れ、短期間でフィルタの交換を行う必要が発生し交換の手間とコストが掛かるといった問題があった。

【0007】

本発明は前記した問題点を解決せんとするもので、その目的とするところは、筐体内の温度が高くなった場合には、吸気口と排気口とを開放して外気を導入して筐体内を冷却し、また、筐体内の温度が低下して外気を導入するほどでない場合には前記吸気口と排気口とを閉塞して筐体内で空気を循環して冷却することで、筐体内の効率的な温度管理と外気導入によるフィルタの汚れを少なくした情報表示装置を提供せんとするにある。

【課題を解決するための手段】

【0008】

本発明の情報表示装置は前記した目的を達成せんとするもので、請求項１の手段は、空気の流路が少なくとも２つ以上形成されるように透明板と表示ユニットおよび電気回路部とを配置した筐体と、該筐体に形成された外気を導入する吸気口と、前記筐体内の前記流路を通過した空気を外部に排気する排気口と、前記吸気口から外気を導入し前記排気口から外部に排気させるためのファンと、前記吸気口および排気口に閉塞および開放可能に取付けられた風向制御板と、該風向制御板を同時に開放状態と閉塞状態に制御する駆動機構とより構成し、前記風向制御板を開放することで外気を筐体内に導入、かつ、排気し、また、風向制御板を閉塞することで筐体内の空気を循環させるようにしたものである。

【0009】

請求項２の手段は、前記した請求項１の手段において、前記筐体に設けられる吸気口を筐体の背面板における下部位置の両側に２つ配置し、排気口を筐体の背面板における上部位置の中央部に１つ配置すると共に、１つのファンであっても筐体内の空気の淀みを防止したことを特徴とする。

【0010】

請求項３の手段は、前記した請求項１の手段において、前記表示ユニットと前記透明板との間の流路に流れる前記吸気口よりの風量を、前記表示素子と前記電気回路部との間の流路に流れる風量より多くしたことを特徴とする。

【0011】

請求項４の手段は、前記した請求項１の手段において、前記駆動機構を駆動して前記風向制御板によって閉塞あるいは開放するタイミングを、前記筐体内に設けられた温度センサよりの出力により、あるいは、表示する表示素子の点灯率によって制御することを特徴

とする。
【0012】
請求項５の手段は、前記した請求項１の手段において、前記駆動機構は、モータによって回転するシャフトと、該シャフトと前記風向制御板とを接続し、かつ、前記シャフトの回転によって各風向制御板を同時に閉塞状態と開放状態とするリンクとで構成したことを特徴とする。
【発明の効果】
【0013】
本発明は前記したように、外気を導入する吸気口と、筐体内を循環した空気を排気する排気口とに風向制御板を設け、かつ、それぞれの風向制御板を同時に制御して吸気口と排気口を閉塞したり開放したりするようにしたので、風向制御板を開放することで筐体内に外気の導入が行われ、また、風向制御板を閉塞することで筐体内の空気を循環させることができるように構成したので、筐体内の温度が高くなった場合には外気を導入して冷却し、外気を導入するほどに筐体内の温度が高くない場合には筐体内の空気を循環して冷却することができるので、フィルタ交換を頻繁に行う必要がなくなり、フィルタ交換のためのメンテナンスを軽減することができる。
【0014】
また、筐体に設けられる吸気口を筐体の背面板における下部位置の両側に２つ配置し、排気口を筐体の背面板における上部位置の中央部に１つ配置することで１つのファンであっても筐体内の空気の淀みを防止でき、かつ、下部から吸気し上部から排気することで、外気導入時において熱対流をより有効なものとすることができる。
【0015】
さらに、表示素子と前記透明板との間の流路に流れる吸気口よりの風量を、表示素子と電気回路部との間の流路に流れる風量より多くすることで、発熱量の多い部分をより効率的に冷却できるため、筐体内全体の温度を低下させることができる。
【0016】
また、駆動機構を駆動して前記風向制御板によって閉塞あるいは開放するタイミングを、前記筐体内に設けられた温度センサよりの出力により、あるいは、前記表示素子によって表示する点灯率によって制御することで、外気導入か循環かの判断が自動的、かつ、正確に行われて筐体内の温度の上昇を確実に防止することができる。
【0017】
さらに、駆動機構は、モータによって回転するシャフトと、該シャフトと風向制御板とを接続し、かつ、シャフトの回転によって各風向制御板を同時に閉塞状態と開放状態とするリンクとで構成したので、簡単な構造であることから故障もなく、かつ、コストの低減を図ることができる等の効果を有するものである。
【発明を実施するための最良の形態】
【0018】
外気を導入する吸気口と、筐体内を循環した空気を排気する排気口とに風向制御板を設け、かつ、それぞれの風向制御板を同時に制御して吸気口と排気口を閉塞したり開放したりするようにしたので、風向制御板を開放することで筐体内に外気の導入が行われ、また、風向制御板を閉塞することで筐体内の空気を循環させることができるものである。
【実施例】
【0019】
以下、本発明に掛かる情報表示装置の実施例を図１～図４と共に説明する。
１は筐体にして、前面板１ａの開口部には硝子等の透明板２が密閉状態で取付けられている。３は前記透明板２の背面側に空気の流路ａを介して設置された表示素子としてのＬＥＤがドットマトリックス状に配置された表示ユニットである。４は表示しない支持具に前記表示ユニット３と一体で取付けられＬＥＤを点灯制御するための駆動基板にして、前記表示ユニット３との間には空気の流路ｂが形成されている。
【0020】

５は前記表示ユニット３を制御するための制御回路および電源ユニットが組み込まれた電気回路部にして、前記駆動基板４および後述する排気口７に向かって空気の流路ｃを形成するための第１ダクト板６、第２ダクト板７との間にも隙間が形成されている。第１ダクト板６は前記流路ｃに流れる風量を絞るために上端が折曲された絞り板部６ａが形成され、かつ、筐体１の背面板１ｂとの間に空気の排気流路ｄを形成している。また、第２ダクト板７は前記第１ダクト板６と上下方向に間隔を介して配置され、かつ、筐体１の背面板１ｂとの間に空気の吸気流路ｅを形成している。

【0021】

８は筐体１の背面板１ｂの左右位置における下方に開口された外気を導入するための２つの吸気口にして、雨や埃等が直接入り込まないように覆い板８ａが取付けられている。また、吸気口８には埃や塩分等を除去するためのフィルタ８ｂが取付けられている。

【0022】

９は筐体１の背面板１ｂの中央位置における上方に開口され筐体１内の熱された空気を排気するための排気口にして、前記吸気口８の覆い板８ａと同様に覆い板９ａが取付けられている。１０は前記した空気の排気流路ｄ内に取付けられたファンにして、該ファン１０を駆動することで前記吸気口８から外気を導入し、前記した各風の流路ａ～ｅを通過させた後に排気口９より熱せられた空気を排気する。

【0023】

１１は筐体１の背面板１ｂにおける前記２つの吸気口８が形成された上縁部に回動自在に取付けられた風向制御板にして、該風向制御板１１が後述する駆動機構１３によって回動されて吸気口８を閉塞したり開放したりする。１２は同じく背面板１ｂにおける前記排気口９が形成された下縁部に回動自在に取付けられた風向制御板にして、該風向制御板１１が駆動機構１３によって回動されて排気口９を閉塞したり開放したりする。

【0024】

駆動機構１３は筐体１内に固定されたモータ１３ａと、該モータ１３ａによって回転されるシャフト１３ｂと、該シャフト１３ｂを回転自在に支持する一対の軸受け１３ｃと、前記シャフト１３ｂと前記３つの風向制御板１１，１２とを接続し、前記モータ１３ａが回転することにより、全ての風向制御板１１，１２を回動させて吸気口８および排気口９を同時に閉塞し、また、前記モータ１３が逆回転することにより全ての風向制御板１１，１２を回動させて吸気口８および排気口９を同時に開放するためのリンク１３ｄとより構成されている。

【0025】

なお、図示しないが筐体１内の上部には温度センサが取付けられ、該温度センサが予め設定した温度以上を検出したときに駆動機構１３のモータ１３ａに通電して風向制御板１１，１２を開放方向に回動させて外気の導入を行い、また、温度センサが前記設定した温度より低いときには駆動機構１３のモータ１３ａに通電して風向制御板１１，１２を閉塞して筐体１内で空気を循環させ、さらに、冬季等において冷却が不要な場合にはファン１０への通電を停止するように構成されている。

【0026】

なお、前記温度センサに代えて点灯する表示素子の全表示素子に対する比である点灯率、すなわち、表示素子を点灯している数が多い場合には点灯率が高く、少ない場合には点灯率が低いで決定し、点灯率が予め設定した点灯率より高い場合には風向制御板１１，１２を開放方向に周期的に回動させて外気の導入を行い、また、点灯率が低い場合には風向制御板１１，１２を閉塞して空気を循環させてもよい。

【0027】

次に、前記した構成に基づいて筐体内を冷却する方法について説明する。

初めに、情報表示装置に表示が行われ、かつ、温度センサで予め設定した第１の温度検出が行われるとファン１０に通電され、空気の内部循環が実行される。この状態で、前記した電気回路部５において温度センサで検出した温度が第２の設定温度よりも高いと判断した場合あるいは表示素子の点灯率が高いと判断した場合には、前記電気回路部５は駆動

機構１３のモータ１３ａの通電を行う。これにより、シャフト１３ｂが回転してリンク１３ｄを介して吸気口８および排気口９に設けられている風向制御板１１，１２が回動されて吸気口８および排気口９を開放する。

【0028】

これにより、２つの吸気口８より外気が筐体１内に導入されて、流路ｅを介して流路ａ，ｂ，ｃに導入される。ここで、最も温度上昇が高い部分が表示ユニット３の前面であるとすると流路ａの風量が、例えば、全体の７０％となるように前記第１ダクト板６の絞り板６ａによって調節することで行える。そして、他の流路ｂ，ｃには残りの３０％の風量となる。従って、筐体１内全体を効率良く冷却することが可能となり、かつ、表示ユニット３の図示しないリード線を含む駆動基板４を効率よく冷却できるので表示素子の信頼性が高くなる。

【0029】

前記流路ａ～ｃを通過した外気は流路ｄを介して排気口９より外部に排気される。なお、前記吸気口８にはフィルタ８ｂが設けられているので、外気の吸引時に外気中に含まれている埃や塩分等は除去される。

【0030】

そして、前記した動作によって筐体１内の温度が低下しあるいは点灯率が低くなったと電気回路部５が判断すると、風向制御板１１，１２によって吸気口８および排気口９を閉塞し、前記したファン１０による空気の内部循環に移行する。

【0031】

これにより、ファン１９は連続して動作状態となり、筐体１内の空気は前記した流路ａ～ｅ内を前記したと同じ状態で循環させるため、筐体１内の温度上昇を防止することができる。そして、外気導入が停止することで、フィルタ８ｂへの外気の流入が停止するので、フィルタ８ｂにおける埃や塩分等の堆積が制限され、従って、フィルタ８ｂのメンテナンスの回数を少なくすることが可能となる。

【0032】

さらに、夜間や冬季等において温度センサが前記した第１の設定温度以下の温度を検出し筐体１内の温度が冷却する必要がないまで低下したと電気回路部５が判断すると、表示の有無に係わらずファン１０への通電を停止して省電力化を図る。ただし、寒冷地に設置される情報表示装置で、冬季に着雪する場合には、着雪防止のための暖気循環用としてファン１０への通電を継続してもよい。

【図面の簡単な説明】

【0033】

【図1】本発明に係る情報表示装置の断面図である。

【図2】同上の背面図である。

【図3】駆動機構の構成を説明するための構成図である。

【図4】（ａ）は風向制御板を開放して外気を取り込んでいる状態を示す説明図、（ｂ）は風向制御板を閉塞して循環状態を示す説明図である。

【符号の説明】

【0034】

１	筐体
２	透明板
３	表示ユニット
４	駆動基板
５	電気回路部
６	第１ダクト板
７	第２ダクト板
８	吸気口
９	排気口
１０	ファン

１１，１２　風向制御板
１３　　駆動機構
１３ａ　　モータ
１３ｂ　　シャフト
１３ｄ　　リンク

【図1】

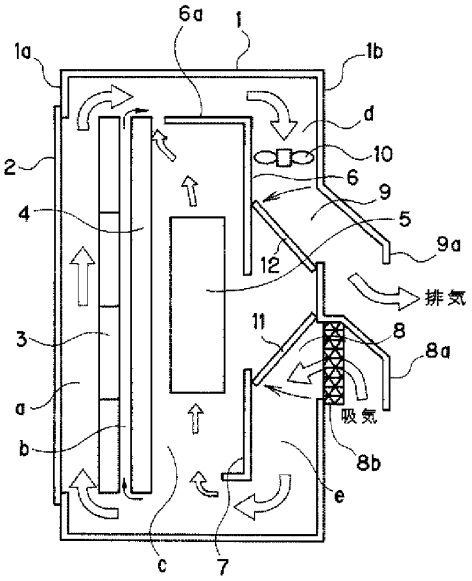

【図2】

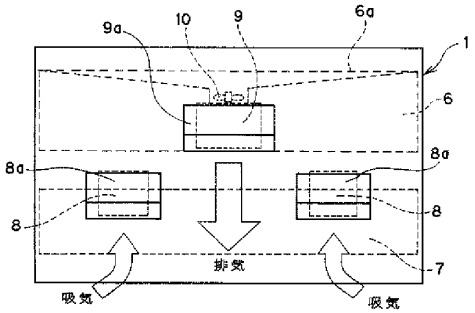

【図3】

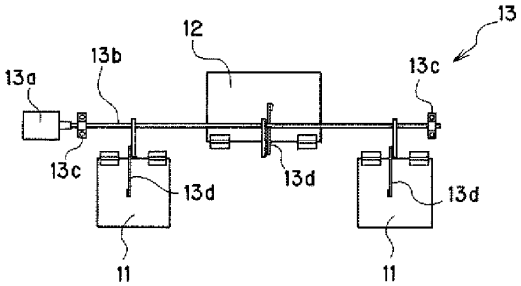

【図4】

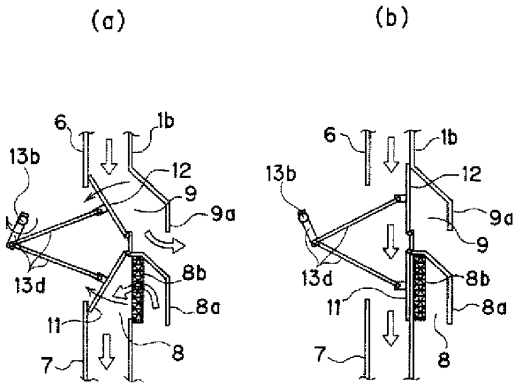

(72)発明者　大塚　久就
愛知県海部郡美和町大字篠田字面徳２９－１　名古屋電機工業株式会社内

Ｆターム(参考) 3L044 AA04 BA06 CA13 DA01 FA03 GA01 HA03 KA04 KA05
5E322 BA02 BA03 BA04 BB03 BC02
5G435 AA11 AA12 EE02 GG44

Espacenet

Bibliographic data: JP2008292743 (A) — 2008-12-04

COOLING DEVICE, AND ELECTRONIC EQUIPMENT AND PROJECTION TYPE DISPLAY DEVICE EQUIPPED WITH COOLING DEVICE

Inventor(s): UTSUNOMIYA MOTOYASU ±

Applicant(s): NEC DISPLAY SOLUTIONS LTD ±

Classification:
- **international:** ***G02F1/13; G03B21/00; G03B21/16***
- **European:**

Application number: JP20070137858 20070524

Priority number(s): JP20070137858 20070524

Also published as: JP4826956 (B2)

Abstract of JP2008292743 (A)

PROBLEM TO BE SOLVED: To improve cooling efficiency further while using a general-purpose fan as a cooling air generation source. ; SOLUTION: The cooling device for air-cooling a heat generation part in electronic equipment includes a cooling fan 3 for generating the cooling air and a resonance nozzle 19b functioning as a means for imparting a pulsation component to the cooling air generated by the cooling fan 3. The resonance nozzle 19b is constituted of a first orifice plate 20b and a second orifice plate 21b arranged to be opposed in an air-cooling duct 4 for guiding the cooling air to the heat generation part, and a resonance chamber 22b formed between the plates. ;

COPYRIGHT: (C)2009,JPO&INPIT

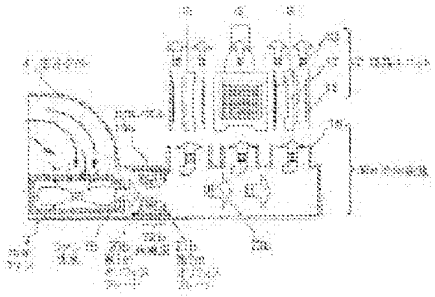

SEC et al. v. MRI
SEC Exhibit 1020.0138
IPR2023-00255

(19)日本国特許庁(JP)　(12)公開特許公報(A)　(11)特許出願公開番号
特開2008-292743
(P2008-292743A)
(43)公開日　平成20年12月4日(2008.12.4)

(51)Int.Cl.		F I			テーマコード（参考）
G03B 21/16	(2006.01)	G03B	21/16		2H088
G02F 1/13	(2006.01)	G02F	1/13	505	2K103
G03B 21/00	(2006.01)	G03B	21/00	E	

審査請求 有　請求項の数 14　ＯＬ　（全 19 頁）

(21)出願番号　特願2007-137858 (P2007-137858)
(22)出願日　平成19年5月24日 (2007.5.24)

(71)出願人　300016765
ＮＥＣディスプレイソリューションズ株式会社
東京都港区芝浦四丁目１３番２３号
(74)代理人　100123788
弁理士　宮崎　昭夫
(74)代理人　100106138
弁理士　石橋　政幸
(74)代理人　100127454
弁理士　緒方　雅昭
(72)発明者　宇都宮　基恭
東京都港区芝浦四丁目１３番２３号　ＮＥＣディスプレイソリューションズ株式会社内

Ｆターム(参考)　2H088 EA12　EA68

最終頁に続く

(54)【発明の名称】冷却装置、冷却装置を備えた電子機器及び投写型表示装置

(57)【要約】
【課題】冷却風の発生源として汎用のファンを用いつつ、冷却効率のさらなる向上を図る。
【解決手段】電子機器内の発熱部を空冷する冷却装置であって、冷却風を発生させる冷却ファン３と、冷却ファン３が発生させた冷却風に脈動成分を付与する手段としての共鳴ノズル１９ｂとを有する。共鳴ノズル１９ｂは、冷却風を発熱部に導く空冷ダクト４内に対向配置された第１のオリフィスプレート２０ｂ及び第２のオリフィスプレート２１ｂと、それらプレートの間に形成された共鳴室２２ｂとから構成されている。
【選択図】図８

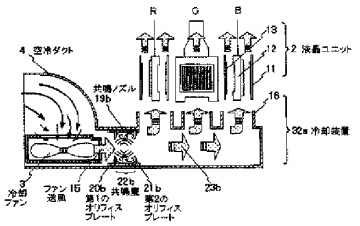

SEC et al. v. MRI
SEC Exhibit 1020.0140
IPR2023-00255

【特許請求の範囲】
【請求項1】
電子機器内の発熱部を空冷する冷却装置であって、
冷却風を発生させるファンと、前記ファンが発生させた前記冷却風に脈動成分を付与する手段とを有することを特徴とする冷却装置。
【請求項2】
冷却風に脈動成分を付与する前記手段が、前記冷却風を共振させる共鳴ノズルであって、
前記共鳴ノズルは、前記冷却風を前記発熱部に導くダクト内に対向配置された第１のオリフィスプレート及び第２のオリフィスプレートと、それらプレートの間に形成された共鳴室と、から構成されていることを特徴とする請求項１記載の冷却装置。
【請求項3】
前記共鳴ノズルが、前記冷却風を前記発熱部に導くダクトの吐出口に設けられていることを特徴とする請求項１又は請求項２記載の冷却装置。
【請求項4】
冷却風に脈動成分を付与する前記手段が、前記ファンが発生させた前記冷却風を自励振動させる流体素子振動器であることを特徴とする請求項１記載の冷却装置。
【請求項5】
流体素子振動器が、前記冷却風を前記発熱部に導くダクトの吐出口に設けられていることを特徴とする請求項４記載の冷却装置。
【請求項6】
前記流体素子振動器は、前記冷却風を前記発熱部に導くダクトと、前記ダクトを取り囲むように設けられ、該ダクトに少なくとも２箇所で連通する連結ダクトと、前記ダクトと連結ダクトとの連通部から前記冷却風の下流側に向けて次第に径が拡大する吐出ノズルとから構成されていることを特徴とする請求項４又は請求項５記載の冷却装置。
【請求項7】
前記流体素子振動器は、前記冷却風を前記発熱部に導くダクトと、前記ダクトを取り囲むように設けられ、該ダクトに少なくとも１箇所で連通する連結ダクトと、前記連結ダクト内に設けられ、該連結ダクト内に圧力変動を生じさせる圧電素子と、前記ダクトと連結ダクトとの連通部から前記冷却風の下流側に向けて次第に径が拡大する吐出ノズルとから構成されていることを特徴とする請求項４又は請求項５記載の冷却装置。
【請求項8】
前記連結ダクトが、前記冷却風を前記発熱部に導くダクトの途中に設けられていることを特徴とする請求項６又は請求項７記載の冷却装置。
【請求項9】
冷却風に脈動成分を付与する前記手段が、前記冷却風の流路上に設けられた断面形状楔形のブロックであって、
前記ブロックは、その頂点の少なくとも一つが前記冷却風の上流側を向くように前記流路上に配置され、該ブロックに当たった前記冷却風にエッジトーン現象を発生させて、前記冷却風に脈動成分を付与することを特徴とする請求項１記載の冷却装置。
【請求項10】
前記ブッロクが、前記冷却風を前記発熱部に導くダクト内に設けられていることを特徴とする請求項９記載の冷却装置。
【請求項11】
前記ブロックが、前記発熱部を挟んで、該発熱部に前記冷却風を導くダクトの吐出口と反対側に配置されることを特徴とする請求項９記載の冷却装置。
【請求項12】
冷却風に脈動成分を付与する前記手段が複数の前記発熱部ごとに設けられていることを特徴とする請求項１乃至請求項１１のいずれかに記載の冷却装置。

【請求項13】
請求項１乃至請求項１２のいずれかに記載の冷却装置を備えた電子機器。
【請求項14】
入射側偏光板、液晶パネル及び出射側偏光板から構成される液晶ユニットによって形成された画像を拡大投写する投写型表示装置であって、
請求項１乃至請求項１２のいずれかに記載の冷却装置を備え、該冷却装置によって前記【発明の詳細な説明】れることを特徴とする投写型表示装置。
【技術分野】
【0001】
本発明は、電子機器内にある発熱部の冷却に関するものである。
【背景技術】
【0002】
従来から電子機器の発熱部を冷却するための手段が多数開発され、そのうちのいくつかは実用化されている。それら冷却手段の一つである空冷方式の冷却手段は、簡易かつ安価な冷却手段として、多くの電子機器に採用されている。例えば、業務用および一般家庭用に広く普及している投写型表示装置（プロジェクタ）においても、空冷方式、特に強制空冷方式の冷却手段が採用されている。
【0003】
投写型表示装置は、画像表示素子上に生成された画像をスクリーンに拡大投影する表示装置である。かかる投写型表示装置のうち、画像表示素子に液晶パネルを用いた液晶プロジェクタ装置は、次のような構成と動作によってスクリーン上に画像を拡大投影する。
【0004】
液晶プロジェクタ装置は、光源を備えている。該光源から発せられた白色光は、リフレクタで反射され、ＰＢＳ（Polarization Beam Splitter：偏光ビームスプリッタ）により偏光変換された後に、Ｒ／Ｇ／Ｂの各色光に分離される。分離された各色光は、各色ごとに用意された液晶パネルに導かれ、対応する液晶パネルに入射する。液晶パネルに入射した各色光は、液晶パネルによってビデオ信号に従った光変調を受ける。光変調された各色光は、色合成プリズムにより合成され、投写光学系を介してスクリーン上に投写される。
【0005】
ここで、ＴＮ（Twisted Nematic）モードで動作する液晶パネルは、特定の直線偏光成分しか扱えない。そこで、各液晶パネルの入射側には偏光板が配置され、液晶パネルに入射する色光の偏光方向が所定方向に統一される（ここでは、Ｓ偏光に統一されるものとする。）。さらに、液晶パネルの出射側にも偏光板が配置され、液晶パネルで光変調を受けた光のＳ偏光成分が該偏光板によってカットされ、Ｐ偏光成分のみが抽出される。ここで、液晶パネル及びその前後に配置される偏光板は、一体化されてユニット（液晶ユニット）を形成しているのが通常である。また、以下の説明では、液晶パネルの入射側に配置された偏光板を「入射側偏光板」、出射側に配置された偏光板を「出射側偏光板」と呼ぶ場合がある。
【0006】
このように、液晶パネルの前後に、光軸に沿って配置される入射側偏光板及び出射側偏光板は、各々１軸方向の偏光光のみを通過させ、他の偏光光を遮蔽する。入射側偏光板及び出射側偏光板によって遮蔽された光は熱に変換される。すなわち、入射側偏光板及び出射側偏光板は発熱する。また、液晶パネルにおいても、各画素境界にあるブラックマトリクスによって入射光の一部が遮蔽され、遮蔽された光は熱に変換される。従って、液晶パネルも入射側偏光板及び出射側偏光板と同様に発熱する。換言すれば、液晶ユニットは、プロジェクタという電子機器内の発熱部である。
【0007】
一方で、液晶パネルや偏光板には有機材料が用いられることが多い。従って、長時間にわたって波長の短い光が照射されたり、高温に曝されたりすると、液晶パネルの配向膜がダメージを受けたり、偏光板の偏光選択特性が低下したりするなど、その機能が著しく損

なわれてしまう。そこで、液晶プロジェクタには、液晶ユニットを冷却するための冷却手段が設けられている。以下、液晶プロジェクタに設けられている冷却手段について詳しく説明する。

【0008】

図２０（ａ）は、一般的な液晶プロジェクタ１の外観斜視図であり、（ｂ）は内部構造を示す斜視図である。また、図２１は、図２０（ｂ）に示す内部構造を模式的に示した平面図である。

【0009】

図２１に示すように、液晶プロジェクタ１の筐体内には、液晶ユニット２を強制空冷するための冷却ファン３と空冷ダクト４とが設けられている。また、光源５を強制冷却するための冷却ファン７が設けられている。さらに、筐体内の空気を強制的に排気して電源ユニット６等を冷却するための排気ファン８も設けられている。

【0010】

図２２を参照して、冷却ファン３及び空冷ダクト４による液晶ユニット２の冷却方法について具体的に説明する。図２２（ａ）は、冷却ファン３及び空冷ダクト４の分解斜視図、同図（ｂ）は冷却風の流れを示す模式図である。

【0011】

図２２（ａ）（ｂ）に示すように、入射側偏光板１１、液晶パネル１２及び出射側偏光板１３から構成される液晶ユニット２は、Ｒ/Ｇ/Ｂの色光ごとに設けられており、それら液晶ユニット群の下方に、空冷ダクト４の吐出口１６が配置されている。

【0012】

主に図２２（ｂ）に示すように、冷却ファン３によって生み出されたファン送風（冷却風）１５は、空冷ダクト４を通って該空冷ダクト４の吐出口１６から吹き出す。吐出口１６から吹き出した冷却風１５は、各液晶ユニット２の下方から各液晶ユニット２に供給される。各液晶ユニット２に供給された冷却風１５は、各ユニット２の入射側偏光板１１、液晶パネル１２及び出射側偏光板１３の間の空間を通過して上方に抜ける。

【0013】

ここで、近年のプロジェクタの利用形態の多様化に応じて、小型化・高輝度化の要求が高まっている。このような要求に応えるために、ランプ出力の向上と表示デバイス（液晶ユニット）の小型化が進められている。その結果、液晶ユニットへ入射する光の光束密度が増大し、液晶ユニットを構成する液晶パネル、入射側偏光板及び出射側偏光板の熱負荷は上昇の一途をたどっている。

【0014】

一方で、環境負荷の低減とランニングコストの削減を目的に、プロジェクタの長寿命化の要求も次第に高まりつつある。ランプ交換部品を除けば、液晶プロジェクタの寿命は、主に液晶ユニットの寿命に依存する。液晶ユニットの冷却手段の冷却能力を高めて液晶ユニットの寿命を延ばすことができれば、液晶プロジェクタ自体の寿命を延ばすことができる。

【0015】

一般に、液晶ユニットの冷却手段として空冷方式を採用する場合、その冷却能力を高めるためには、冷却ファンの送風量を増加させて、冷却風の風速を上げる必要がある。しかしながら、冷却ファンの回転数を上昇させて送風量を増加させると、冷却ファンの動作騒音も増加する。また、冷却ファンを大径化して送風量を増加させると、装置が大型化してしまう。

【0016】

また、冷却風が冷却対象に沿って平行に流れる場合（層流）、平均熱伝達率は風速の平方根に比例し、冷却対象の温度上昇は風速の平方根に反比例する。従って、冷却対象の温度がある程度まで低下すると、風速増加に対する冷却対象の温度低下の感度が鈍くなる。

【0017】

図２３に、0.8"サイズの液晶パネル（50001m-25℃環境）の動作温度の風速依存曲線の

一例を示す。図２３より、液晶パネル動作温度を70℃から60℃まで下げる場合には、冷却風の風速を4.5m/sから8m/sへ増速させるだけでよいが、60℃から50℃まで下げる場合には、冷却風の風速を8m/sから18m/sまで増速させなければならないことがわかる。

【0018】

従って、液晶ユニットの長寿命化を図るために、液晶ユニットの動作温度（特に液晶パネルの動作温度）のさらなる低減を目指す場合、冷却風の風速を極めて高速化しなければならない。しかし、冷却風の風速を高速化すると、冷却ファンの動作騒音の増大や装置の大型化を招く虞があることは上述のとおりである。さらには、冷却ファンの動作騒音の増大や装置の大型化を許容したとしても、冷却能力の向上には限界（空冷限界）がある。

【0019】

これまでは、プロジェクタ、特に液晶プロジェクタを例にとって電子機器の冷却に関して説明してきた。しかし、プロジェクタ以外にも発熱部を持った電子機器は多数存在しており、当該電子機器の性能向上や使用態様の多様化に伴って効率的な冷却手段が求められている。例えば、近年のパーソナルコンピュータは高性能な中央演算処理装置を内蔵しており、その中央演算処理装置は、その動作中に熱を発する。一方、中央演算処理装置の安定した動作を確保するためには、該処理装置を冷却して動作温度を所定範囲内に維持する必要がある。

【0020】

以上のような状況の下、電子機器を高効率で冷却するための手段の開発が急務となっている。そこで、特許文献１には、発熱デバイスの発熱面に冷却流体を供給する手段を振動させることによって、冷却流体の噴流を上記発熱面に供給する冷却装置が記載されている。

【0021】

また、特許文献２には、液晶ユニットを構成するパネル間の隙間に乱流発生手段を設け、該隙間を流れる冷却風に乱流を発生させて冷却効率の向上を図ることが記載されている。

【0022】

また、特許文献３には、電子機器を冷却するための冷却風の発生源として、容積変化型のポンプが示されている。さらに、同文献３には、容積変化型ポンプの駆動周波数を最適化することによって放熱効率を向上させることが指摘されている。

【特許文献1】特開２０００－２５２６６９号公報

【特許文献2】特開２００１－１２５０５７号公報

【特許文献3】特開２００６－２９９９６２号公報

【発明の開示】

【発明が解決しようとする課題】

【0023】

冷却流体の供給手段を振動させて冷却風を噴流とするためには、供給手段を振動させる駆動機構が必要となる。しかし、新たな駆動機構を追加すれば、装置の大型化や高コスト化を招く。また、メカニカルな駆動機構を追加することによって、装置全体の信頼性が低下する虞もある。

【0024】

液晶ユニットを構成するパネル間の隙間に乱流発生手段を設けると、通風抵抗が増加し、冷却効率が低下する虞がある。理論的には、乱流発生手段の大きさ、形状、配置などを最適化することによって、上記冷却効率の低下を回避できる可能性はある。しかし、上記のような最適設計は実際には非常に困難であり、非現実的である。

【0025】

冷却風の発生源としての容積変化型ポンプは、ファンに比べて静圧が大きいというメリットがある一方で、送風量が少なく、騒音が大きいというデメリットがある。また、多くの電子機器では、冷却風の発生源として従来からファンが多用されている。よって、冷却風の発生源をファンからポンプに変更するには、抜本的な設計変更が必要になる場合が多

いと予想される。
【0026】
電子機器の冷却に空冷方式を採用する場合、冷却能力や冷却効率以外の重要な課題の１つに塵埃の問題がある。具体的には、冷却対象に吹き付けられる冷却風に塵埃が混入していると、その塵埃が冷却対象の表面に付着する。電気機器が液晶プロジェクタである場合を例によって具体的に説明すれば、次のとおりである。冷却風に塵埃が混入していると、混入した塵埃が液晶パネルの表面に付着する。特に、図２４に示すように、液晶パネル１２の表面１７のうち、光透過領域１８に塵埃が付着すると、塵埃の影がスクリーン上に結象されてしまい画像品質を著しく劣化させる虞がある。
【0027】
そこで、通常の液晶プロジェクタでは、液晶ユニットの冷却に用いる冷却ファンの吸気部に、空冷ダクト内へ塵埃の混入を回避するための防塵フィルタが設置されている。しかしながら、筐体の他の通気口や隙間などから塵埃が空冷ダクト内に侵入する場合も多々あり、使用環境によっては防塵が不十分なケースも予想される。
【0028】
本発明は上記課題に鑑みてなされたものであり、その目的の一つは、冷却風の発生源として汎用のファンを用いつつ、冷却効率のさらなる向上を図ることである。目的の他の一つは、冷却対象の表面に付着した塵埃を冷却風によって効果的に除去することである。
【課題を解決するための手段】
【0029】
上記目的を達成する本発明は、冷却対象に対して脈動成分が付与された冷却風を供給することを課題解決手段の基本原理とするものである。空気噴流（冷却送風）に脈動成分を与えた脈動噴流により生成される周期的な流れが流体中を通過すると、その周囲流体に高周波の小スケールの乱れ（乱流渦）が誘起されるため、脈動周波数や振幅によって独特の熱伝達特性を示し、広い領域で熱伝達効率が増進する。また、脈動成分が付与された、すなわち、周期的な速度変動と圧力変動とが与えられた冷却風を冷却対象に供給することで、冷却対象の表面に付着した塵埃が効果的に除去される。
【0030】
そこで、本発明の冷却装置は、電子機器内の発熱部を空冷する冷却装置であって、冷却風を発生させるファンと、前記ファンが発生させた前記冷却風に脈動成分を付与する手段とを有する。
【発明の効果】
【0031】
本発明によれば、電子機器内の発熱部に脈動噴流化された冷却風が供給されるので、熱伝達効率が向上し、冷却効果が高まる。また、冷却風を脈動噴流化するために、メカニカルな可動部や摺動部を必要としないので、信頼性の高い安価な冷却装置を提供することができる。さらに、脈動噴流化された冷却風が発熱部に供給される結果、冷却風によって、発熱部に付着している塵埃を除去することもできる。
【発明を実施するための最良の形態】
【0032】
（実施形態１）
次に本発明の冷却装置の実施形態の一例について説明する。本実施形態の冷却装置は、冷却風を発生させるファンと、ファンによって生み出された冷却風を電子機器内の発熱部またはその近傍に導くダクトとを少なくとも有する。そして、上記ダクトに、該ダクト内を通過する冷却風（以下「ファン送風」と呼ぶ場合もある。）に脈動を与えて脈動噴流（Pulsed Jet flow）とする手段が設けられていることを特徴とする。
【0033】
本実施形態では、ファン送風に脈動成分を付与する第１の手段として、ダクトの出口に共鳴ノズルが設けられている。共鳴ノズルは、特定の周波数でファン送風を共振させることにより、攪乱成分が増幅した共鳴噴流を生成する。図１、図２を参照して上記共鳴ノズ

ルについて詳細に説明する。

【0034】

図１は、共鳴ノズル１９ａの構成を示す模式図であり、（ａ）は断面図、（ｂ）は斜視断面図である。また、図２は、共鳴ノズル１９ａの作用を示す模式図であり、（ａ）は比較のために用意した通常のノズルの断面図、（ｂ）は共鳴ノズル１９ａの断面図である。

【0035】

共鳴ノズル１９ａは、ダクト３１ａの出口内部に設けられた第１のオリフィスプレート２０ａと、第１のオリフィスプレート２０ａよりも下流側に設けられた第２のオリフィスプレート２１ａと、対向する２枚のオリフィスプレート２０ａ、２１ａの間に設けられた共鳴室（空洞容積）２２ａとから構成されている。尚、共鳴室２２ａの直径及び高さ（２枚のオリフィスプレート２０ａ、２１ａの間隔）は、共鳴室２２ａの容積が所定容積となるように設定されている。

【0036】

共鳴ノズル１９ａにファン送風１５を流入させると、図２（ｂ）に示すように、風速や第1のオリフィスプレート２０aおよび第２のオリフィスプレート２１aの開口径、あるいは共鳴室２２ａの空洞容積により規定される周波数で送風が共振（共鳴）し、第２のオリフィスプレート２１ａの下流側で、撹乱成分が増幅された間欠的な共鳴噴流２３a（resonance jet flow)が生成される。このような脈動噴流（＝共鳴噴流２３a）は、周囲流体との混合・拡散特性を改善・促進するため、熱伝達効率を改善する。

（実施形態２）

以下、本発明の冷却装置の実施形態の他例について説明する。本実施形態の冷却装置も、冷却風を発生させるファンと、ファンによって生み出された冷却風を電子機器内の発熱部またはその近傍に導くダクトとを少なくとも有する。そして、上記ダクトに、該ダクト内を通過する冷却風（ファン送風）に脈動成分を付与して脈動噴流とする手段が設けられていることを特徴とする。

【0037】

本実施形態では、ファン送風に脈動成分を付与する第２の手段として、ファン送風を自励振動させる流体素子振動器がダクトに設けられている。図３、図４を参照して上記流体素子振動器について詳細に説明する。

【0038】

図３は、流体素子振動器２４ａの構成を示す模式図であり、（ａ）は斜視断面図、（ｂ）は横断面図である。また図４は、流体素子振動器２４ａの作用を示す模式的断面図である。

【0039】

流体素子振動器２４ａは、ファン送風１５の下流側に向けて次第に開口径が縮小するダクトの出口部と、該出口部に連設され、下流側に向けて次第に開口径が拡大するノズル部と、出口部とノズル部との連設部分を取り囲むように形成された矩形のダクトとによって構成されている。以下の説明では、上記出口部を「ダクト排気口２５ａ」、ノズル部を「吐出ノズル２７ａ」、矩形のダクトを「連結ダクト２６ａ」と呼ぶ。

【0040】

ダクト排気口２５aは、ダクト３１ｂの一部であって、下流側に向けて次第に開口径が縮小するように、少なくとも対向する２つの内壁が下流側に向けて次第に近接するように傾斜している。吐出ノズル２７ａは、下流側に向けて次第に開口径が拡大するように、少なくとも対向する２つの内壁が下流側に向けて次第に離間するように傾斜している。吐出ノズル２７aは、ダクト３１ｂの一部であっても、ダクト３１ｂと別部材であってもよい。連結ダクト２６ａと、ダクト排気口２５ａ及び吐出ノズル２７ａとの間には、２つの制御口２８ａ、２８bが用意されている。連結ダクト２６aは、制御口２８ａ、２８ｂを介してダクト排気口２５ａ及び吐出ノズル２７ａと連通している。

【0041】

このとき、後述する流体自励振動が発生するためには、図３（ｂ）に示すダクト排気口

２５aの射出開口幅ａと、吐出ノズル２７ａの喉部開口幅ｂとの寸法比がｂ＞３ａとなることが条件となる。

【0042】

次に図４を参照して、流体素子振動器２４ａの作用（流体自励振動の発生メカニズム）について説明する。

（１）ダクト排気口２５ａから流出した噴流（ファン送風１５）は、コアンダ効果によって、吐出ノズル２７ａの傾斜した内壁の一方に沿って屈曲する（図４（ａ））。ここで、コアンダ効果とは、流れの中に物体を置くと、流体と物体の壁面との間の圧力が低下し、流体が壁面に吸い寄せられ、その物体に沿って流れの向きが変わる流体の性質をいう。

（２）このときファン送風１５が屈曲した側に、エントレインメント（巻き込み）が発生し、ファン送風１５の屈曲起点（制御口２８ａ）に近い連結ダクト２６ａの左半分の圧力が低下する（図４（ｂ））。以下の説明では、図４に示す連結ダクト２６ａの左半分を「左側領域Ａ」、右半分を「右側領域Ｂ」と呼ぶ。

（３）連結ダクト２６ａの左右で圧力差が発生すると、連結ダクト２６ａ内の空気は、正圧側（右側領域Ｂ）から負圧側（左側領域A)へ流れ込む（図４（ｃ））。

（４）空気が右側領域Ｂから左側領域Ａへ流入すると、これまで負圧であった左側領域Ａが正圧となる。すると、コアンダ効果により屈曲していたファン送風１５の流れが吐出ノズル２７ａの内壁から引き剥がされる（図４（ｄ））。

（５）次に、連結ダクト２６ａの右側領域Ｂが低圧になっているので、ファン送風１５が吸引され、同じくコアンダ効果により、ファン送風１５が吐出ノズル２７ａの反対側の内壁に沿って屈曲する（図４（ｅ））。

（６）以後、上記現象の繰り返しにより、ファン送風１５は振り子のように揺動し、ファン送風１５の供給が継続する限り自励振動が持続される（図４（ｆ））。

【0043】

このような動作原理に基づいて、流体素子振動器２４ａを通過するファン送風１５には、流体自励振動が発生し、これによりファン送風１５に脈動成分が付与される。

【0044】

尚、連結ダクト２６ａの形状は、連結ダクト２６ａ内の空気が該ダクト２６ａ内の圧力差に起因して移動可能な形状であればよく、矩形に限定されない。例えば、連結ダクト２６ａは、円弧状その他の形状であってもよい。

【0045】

ところで、図５に示すように、図３などに示す連結ダクト２６ａの代わりに、圧電素子２９を用いて左右の制御口の気圧を制御する流体素子振動器２４ｂが知られている。このような流体素子振動器２４ｂは、図３などに示す流体素子振動器２４ａよりもコスト高になるというデメリットがあるが、小型化が可能であるというメリットもある。

【0046】

このように流体素子振動器を用いて流体自励振動を発生させる機構は、フリップフロップノズルとして知られており、クリーンルームのエアシャワーなどとして実用化されている。

（実施形態３）

以下、本発明の冷却装置の実施形態の他例について説明する。本実施形態の冷却装置も、冷却風を発生させるファンと、ファンによって生み出された冷却風を電子機器内の発熱部またはその近傍に導くダクトとを少なくとも有する。そして、上記ダクトに、該ダクト内を通過する冷却風（ファン送風）に脈動成分を付与して脈動噴流とする手段が設けられていることを特徴とする。

【0047】

本実施形態では、ファン送風に脈動成分を付与する第３の手段として、ファン送風の流路上に、エッジトーン現象を発生させる断面形状楔形（三角形）のブロックが配置されている。ここで、エッジトーン現象とは、流体が鋭い角部に衝突するときに流体がその流れと直交する方向に周期的に変動する現象をいう。尚、ブロックはファン送風の流路上に配

置されていればよく、ダクトの内外は問わない。

【0048】

図６、図７を参照してエッジトーン現象を利用したファン送風の脈動化について説明する。図６に示すように、断面形状楔形のブロック３０ａをダクト３１ｃの開口中心軸上に、エッジ（頂点）をダクト３１ｃ側に向けて配置する。また、ダクト３１ｃの開口面とブロック３０ａの頂点とを距離Ｌだけ離間させる。すると、ダクト３１ｃの開口面から射出されるファン送風１５は、ブロック３０ａの頂点に衝突する。

【0049】

次に、図７を参照して、エッジトーン現象の発生メカニズムについて説明する。

（１）ダクト３１ｃの開口面から、噴流として射出されたファン送風１５は、ブロック３０ａの頂点に衝突する（図７（ａ））。

（２）ファン送風１５がブロック３０ａの頂点に衝突すると、擾乱（圧力変動）が発生し、それが距離Ｌを上流側へ伝播していく（図７（ｂ））。

（３）上記擾乱の伝播が、ブロック３０ａとダクト３１ｃとの間の離間した空間内において、局所的な渦変動を励起／増幅させる（図７（ｃ））。

（４）このようにして、ブロック３０ａとダクト３１との間の衝突領域間において、周期的な擾乱が形成されるため、ダクト３１ｃから出射されるファン送風１５（噴流）は、ダクト３１ｃの開口面を節とし、ブロック３０ａを間に挟んで、うねくるように発振する（図７（ｄ））。

【0050】

このようなエッジトーン現象による噴流の発振により、ファン送風１５に脈動成分が付与される。この場合の噴流の振動モードは、噴流の速度（レイノルズ数）や距離Ｌに依存することが知られている。

（実施形態４）

以下、本発明の電子機器の実施形態の一例について説明する。本実施形態における電子機器は、液晶プロジェクタであって、上記実施形態１～３のいずれかに係る冷却装置を備えていることを特徴とする。

【0051】

具体的には、液晶ユニットの下方にファンとダクトとが配置され、液晶ユニットに、脈動成分が付与された冷却風（ファン送風）が供給される。換言すれば、周期的な速度変動と圧力変動とが与えられたファン送風が冷却風として液晶ユニットに供給される。この結果、液晶ユニットにおける熱伝達が促進され、冷却効率が改善される。また、液晶パネルの表面に付着した塵埃が効果的に除去される。

【実施例】

【0052】

次に、実施例を挙げて本発明についてさらに詳しく説明する。ここでは、実施形態１に係る冷却装置を備えた液晶プロジェクタの一例について説明する。図８は、本例の液晶プロジェクタの冷却装置３２ａ及びその近傍の構成を示す模式的断面図である。

【0053】

本例の液晶プロジェクタの基本構成は、背景技術の欄で既に説明した一般的な液晶プロジェクタと同一である。すなわち、Ｒ／Ｇ／Ｂの色光ごとに用意された液晶ユニット２を備え、各液晶ユニット２は、入射側偏光板１１、液晶パネル１２及び出射側偏光板１３から構成されている。

【0054】

本例の液晶プロジェクタが備える冷却装置３２ａは、冷却ファン３と、空冷ダクト４と、共鳴ノズル１９ｂとから形成され、液晶ユニット２の下方に設置されている。共鳴ノズル１９ｂは、図１に基づいて既に説明したように、上流側の第１のオリフィスプレート２０ｂと、下流側の第２のオリフィスプレート２１ｂと、その間に形成された共鳴室（空洞容積）２２ｂとを有する。冷却ファン３及び共鳴ノズル１９ｂは、空冷ダクト４の内部に配置されている。また、共鳴ノズル１９ｂは、冷却ファン３よりも下流側に配置されてい

る。より具体的には、冷却ファン３がファン送風１５を送り出す吐出口の近傍に共鳴ノズル１９ｂが設置されている。

【0055】

次に、本例の液晶プロジェクタにおける液晶ユニット２の冷却動作について説明する。冷却ファン３によって生み出されたファン送風１５は、空冷ダクト４内に設置された共鳴ノズル１９ｂの、第1のオリフィスプレート２０bを通過して、共鳴室２２ｂに流入する。ファン送風１５が共鳴室２２ｂに流入すると、ファン送風１５の風速と共鳴室２２ｂの空洞容積、および第1のオリフィスプレート２０bと第２のオリフィスプレート２１bの開口径に応じた特定の周波数で共振（共鳴）し、下流側に配置された第２のオリフィスプレート２１bから、攪乱成分が増幅された共鳴噴流として射出される。例えば、ファン風速２０ｍ／ｓ、空洞容積（共鳴室）８ｃｍ^{3}の場合、送風は約４ｋHzの卓越周波数（共鳴周波数）で速度変動を発生させる。

【0056】

以上のようにして共鳴室２２ｂ内で共振が生じると、第２のオリフィスプレート２１ｂよりも下流側のファン送風１５に共鳴噴流が形成され、ファン送風１５に大きな脈動成分が付与される。

【0057】

次に、図９を参照して冷却装置３２ａによる冷却効果について説明する。図９は、図８に図示されている３つの液晶ユニット２のうちの１つを抽出した模式図である。より具体的には、図９（ａ）は、入射側偏光板１１と液晶パネル１２との間におけるファン送風１５の様相を示した模式的正面図である。図９（ｂ）は、入射側偏光板１１と液晶パネル１２との間、および液晶パネル１２と出射側偏光板１３との間のファン送風１５の様相を示した模式的側面図である。

【0058】

上述のように、空冷ダクト４内の共鳴ノズル１９ｂによって脈動成分が付与されたファン送風１５は、卓越周波数で速度変動する脈動噴流（共鳴噴流２３ｂ）となって、ダクト吐出口１６から液晶ユニット２の各板間へ供給される。

【0059】

この場合、板間を通過するファン送風１５は、高い乱流性（キャビテーション渦）を保持しつつ、共鳴周波数で間欠的にダクト吐出口１６から高速で噴射される。従って、入射側偏光板１１、液晶パネル１２及び出射側偏光板１３といった発熱部の発熱面上に形成される温度境界層の発達を抑制、あるいは破壊（剥離）しながら進行する。これにより、従来の平行平板流れ（層流）による空冷に比べて、熱伝達率が大幅に改善され、各液晶ユニット２が高効率で冷却される。

【実施例】

【0060】

次に、本発明の実施例の他例について説明する。ここでは、実施形態１に係る冷却装置を備えた液晶プロジェクタの他例について説明する。図１０は、本例の液晶プロジェクタの冷却装置３２ｂ及びその近傍の構成を示す模式的断面図である。

【0061】

本例の液晶プロジェクタの基本構成は、実施例１の液晶プロジェクタと同一であり、相違点は冷却装置の構成のみである。よって、実施例１の液晶プロジェクタと同一の構成については、同一の符号を付して説明を省略する。

【0062】

本例の冷却装置３２ｂでは、Ｒ／Ｇ／Ｂの各液晶ユニット２ごとに共鳴ノズルが設けられている点が実施例１と異なる。より具体的には、ファン送風１５を各液晶ユニット２に分配すべく、各液晶ユニット２ごとに設けられたダクト吐出口１６に、共鳴ノズル１９ｃが設けられている。

【0063】

冷却ファン３によって生み出されたファン送風１５は、空冷ダクト４内で分岐され、各

ダクト吐出口１６から対応する液晶ユニット２に向けて噴射される。このとき各ダクト吐出口１６に共鳴ノズル１９ｃが用意されているので、各液晶ユニット２を構成する入射側偏光板１１と液晶パネル１２の間、および液晶パネル１２と出射側偏光板１３の間に供給されるファン送風１５は、卓越周波数で速度変動する脈動噴流（共鳴噴流２３ｃ）となる（図１１参照）。

【0064】

従って、実施例１と同様に、従来の平行平板流れ（層流）による空冷に比べて、熱伝達率が大幅に改善され、各液晶ユニット２が高効率で冷却される。

【実施例】

【0065】

次に、本発明の実施例のさらに他例について説明する。ここでは、実施形態２に係る冷却装置を備えた液晶プロジェクタの一例について説明する。図１２は、本例の液晶プロジェクタの冷却装置３２ｃ及びその近傍の構成を示す模式的平面断面図である。

【0066】

本例の液晶プロジェクタの基本構成は、実施例１の液晶プロジェクタと同一であり、相違点は冷却装置の構成のみである。よって、実施例１の液晶プロジェクタと同一の構成については、同一の符号を付して説明を省略する。

【0067】

本例の冷却装置３２ｃは、上記冷却装置３２ａ、３２ｂと同様に、液晶ユニット２の下方に配置されており、冷却ファン３、空冷ダクト４及び流体素子振動器２４ｂから構成されている。図示されている流体素子振動器２４ｂでは、連結ダクト２６ｂ及び吐出ノズル２７ｃが空冷ダクト４と一体に形成されている。また、流体素子振動器２４ｂは、空冷ダクト４内に設けられた冷却ファン３の吐出口の近傍に配置されている。

【0068】

次に、図１２、図１３を参照して冷却装置３２ｃによる液晶ユニット２の冷却動作について説明する。図１３に示すように、液晶ユニット２の下方に冷却装置３２ｃが設けられており、冷却ファン３によって生み出されたファン送風１５は、空冷ダクト４内に設けられた流体素子振動器２４ｂを通過する。このとき、下流側に向かって拡大傾斜する吐出ノズル２７ｃと、連結ダクト２６ｂ内を移動する空気の作用とにより、ファン送風１５に流体自励振動が発生する。流体自励振動を発生させる具体的メカニズムについては、実施形態２において詳細に説明したので、ここでの説明は省略する。

【0069】

ファン送風１５に流体自励振動が発生する結果、ファン送風１５は、流体素子振動器２４ｂの下流側において周期的（１０～２０Hz)な揺動を示し、空冷ダクト４の各ダクト吐出口１６へのファン送風１５の供給が時間的に切り替えられる。

【0070】

このようにして発生した流体自励振動は、空冷ダクト４内において、ファン送風１５を高速で左右にスイングさせるため、その下流側に位置する各ダクト吐出口１６からは、一定の時間周期でファン送風１５が断続的に射出される。

【0071】

例えば、ファン送風１５の風速が５～２０ｍ／ｓ、スイング角を１２度前後に設定した場合、自励振動数は５～３０Hz程度になる。仮に、自励振動数が２０Hzとなるように、風速及びスイング角を設定した場合、往路と復路の折り返し点に位置するダクト吐出口（本例では、Ｒ用の液晶ユニット及びＢ用の液晶ユニットに対応するダクト吐出口)では、ファン送風１５の吐出周期は５０ｍｓ間隔となる。一方、その中間に位置するダクト吐出口（本例では、Ｇ用の液晶ユニットに対応するダクト吐出口）では、その半分の２５ｍｓ間隔でファン送風１５が射出される。

【0072】

このようにしてダクト吐出口１６から射出されるファン送風１５は、時間周期による間欠送風となるため、ファン送風１５に大きな脈動成分が付与される。

【0073】
　また、本例の冷却装置は、空冷ダクトの内部空間を分離して、各ダクト吐出口へファン送風を分配する従来の冷却方法に対し、空冷ダクトの内部空間を分離するのではなく、ファン送風を時間的に分割し、各ダクト吐出口から順次射出させる。従って、液晶ユニットの各板間を通過する送風（冷却風）は、高い乱流エネルギーを保持しつつ、間欠的に高速で噴射される。よって、熱伝達率が大幅に改善され、液晶ユニットが効率良く冷却される。

【実施例】
【0074】
　次に、本発明の実施例のさらに他例について説明する。ここでは、実施形態２に係る冷却装置を備えた液晶プロジェクタの他例について説明する。図１４は、本例の液晶プロジェクタの冷却装置３２ｄ及びその近傍の構成を示す模式的断面図である。
【0075】
　本例の液晶プロジェクタの基本構成は、実施例１の液晶プロジェクタと同一であり、相違点は冷却装置の構成のみである。よって、実施例１の液晶プロジェクタと同一の構成については、同一の符号を付して説明を省略する。
【0076】
　本例の冷却装置３２ｄでは、Ｒ／Ｇ／Ｂの各液晶ユニット２ごとに流体素子振動器が設けられている点が実施例３と異なる。より具体的には、ファン送風１５を各液晶ユニット２に分配すべく、各液晶ユニット２ごとに設けられたダクト吐出口１６に、流体素子振動器２４ｃが設けられている。
【0077】
　冷却ファン３によって生み出されたファン送風１５は、空冷ダクト４内で分岐され、各ダクト吐出口１６から対応する液晶ユニット２に向けて噴射される。このとき各ダクト吐出口１６に流体素子振動器２４ｃが設けられているので、各液晶ユニット２を構成する入射側偏光板１１と液晶パネル１２との間、および液晶パネル１２と出射側偏光板１３との間で、ファン送風１５に流体自励振動を発生させ、固有の自励振動数で送風を左右に揺動させることができる（図１５参照）。
【0078】
　上記のように、狭い板間内において送風を周期的に左右へ揺動させる場合、そのスイング角領域において、送風に高い乱流成分（送風ベクトルの転回による撹拌作用）が発生する。従って、ファン送風１５は、入射側偏光板１１、液晶パネル１２及び出射側偏光板１３といった発熱部の発熱面上に形成される温度境界層の発達を抑制し、あるいは破壊（剥離）しながら、放熱を行うことになる。この結果、従来の平行平板流れ（層流）による空冷方法に比べ、冷却効率が大幅に改善される。
【0079】
　ところで、本例及び実施例３の流体素子振動器を、圧電素子を用いて連結ダクト内の気圧を制御するタイプの流体素子振動器（図５参照）で置換可能なことは既述のとおりであり、また、その際のメリット及びデメリットも既述のとおりである。
【実施例】
【0080】
　次に、本発明の実施例のさらに他例について説明する。ここでは、実施形態３に係る冷却装置を備えた液晶プロジェクタの一例について説明する。図１６は、本例の液晶プロジェクタの冷却装置３２ｅ及びその近傍の構成を示す模式的断面図である。
【0081】
　本例の液晶プロジェクタの基本構成は、実施例１の液晶プロジェクタと同一であり、相違点は冷却装置の構成のみである。よって、実施例１の液晶プロジェクタと同一の構成については、同一の符号を付して説明を省略する。
【0082】
　本例の冷却装置３２ｅは、液晶ユニット２の下方に配置されており、冷却ファン３と、

空冷ダクト４と、断面形状が楔形（三角形）のブロック３０ｂとから構成されている。ブロック３０ｂは、空冷ダクト４内であって、かつ、冷却ファン３よりも下流側に配置されている。さらに、ブロック３０ｂは、冷却ファン３の吐出口にその頂点を向け、かつ、その頂点が吐出口から所定の距離だけ離れた位置に配置されている。

【0083】

次に、図１６、図１７を参照して冷却装置３２ｅによる液晶ユニット２の冷却動作について説明する。図１７に示すように、冷却装置３２ｅは液晶ユニット２の下方に配置されている。冷却ファン３によって生み出されたファン送風１５は、空冷ダクト４内に配置されたブロック３０ｂに衝突する。すると、衝突部（ブロック３０ｂの頂点）で発生した擾乱が上流側に伝播し、局所的な渦変動が励起される。励起された渦変動は、冷却ファン３とブロック３０ｂとの間の衝突空間において増幅され、周期的な圧力変動を形成するエッジトーン現象を発生させる。より厳密に言えば、冷却ダクト４は、冷却ファン３とブロック３０ｂとの間の領域でその径が絞られて細くなっており、この径が絞られた部位とブロック３０bの頂点との間の空間領域において渦変動が増幅される。

【0084】

これにより、ファン送風１５は、ブロック３０ｂよりも下流側において周期振動を示す（図１６参照）。この結果、各Ｒ／Ｇ／Ｂごとに設けられたダクト吐出口１６へのファン送風１５の供給が時間的に切り替えられる。

【0085】

以上のようにして発生した流体自励振動によって、ファン送風１５が各ダクト吐出口１６から一定の時間周期で断続的に射出され、ファン送風１５に大きな脈動成分が付与される。

【0086】

実施例３と同様に、冷却風は、空間的に分離されるのではなく、時間的に分割され、各ダクト吐出口から順次射出される。従って、各液晶ユニットの各板間を通過する冷却風は、高い乱流エネルギーを保持しつつ、間欠的に高速で噴射される。よって、熱伝達率が大幅に改善され、液晶ユニットが効率良く冷却される。

【実施例】

【0087】

次に、本発明の実施例のさらに他例について説明する。ここでは、実施形態３に係る冷却装置を備えた液晶プロジェクタの他例について説明する。図１８は、本例の液晶プロジェクタの冷却装置３２ｆ及びその近傍の構成を示す模式的断面図である。

【0088】

本例の液晶プロジェクタの基本構成は、実施例１の液晶プロジェクタと同一であり、相違点は冷却装置の構成のみである。よって、実施例１の液晶プロジェクタと同一の構成については、同一の符号を付して説明を省略する。

【0089】

本例の冷却装置３２ｆでは、Ｒ／Ｇ／Ｂの各液晶ユニットごとにブロックが設けられている点が実施例５と異なる。より具体的には、各液晶ユニット２を間に挟んで、各ダクト吐出口１６と反対側にブロック３０ｃが配置されている。

【0090】

冷却ファン３によって生み出されたファン送風１５は、空冷ダクト４内で分岐され、Ｒ／Ｇ／Ｂの各液晶ユニット２ごとに設けられた各ダクト吐出口１６から射出される。このとき、各液晶ユニット２を挟んで各ダクト吐出口１６の反対側にブロック３０ｃが用意されていることによって、液晶ユニット２を構成する入射側偏光板１１と液晶パネル１２の間、および液晶パネル１２と出射側偏光板１３の間で、ファン送風１５がエッジトーン現象により自励振動し、送風が左右に周期的に揺動される（図１９参照）。

【0091】

この場合も、実施例４と同様に、狭い板間内において送風が周期的に左右に揺動することによって、送風に高い乱流成分（送風ベクトルの転回による撹拌作用）が付与され、冷

却効率が大幅に改善される。
【0092】
　ところで、本例及び他の実施例の冷却装置では、液晶ユニットを構成する入射側偏光板と液晶パネルの間、および液晶パネルと出射側偏光板の間に供給される冷却風に、各々の手段によって脈動成分を付与することで、熱伝達率を改善し、冷却性能の向上を図っている。この場合、冷却風の脈動は速度変動とともに圧力変動を伴うため、送風による「はたき」の効果も、副次的に得ることができる。
【0093】
　従って、冷却ファンによる外気導入の際に、フィルタを通過して空冷ダクト内に侵入した塵埃が、仮に液晶パネルの表面に付着した場合でも、脈動する冷却風によって、塵埃を液晶パネルの表面からはたいて除去することが可能である。この結果、液晶パネルの光透過面を常にクリーンに保ち、投写画像品質を保証することができる。
【図面の簡単な説明】
【0094】
【図1】実施形態１に係る冷却装置の模式的断面図である。
【図2】（ａ）は通常のダクトの模式的断面図、（ｂ）は図１に示す共鳴ノズルの模式的断面図である。
【図3】実施形態２に係る冷却装置の模式的断面図である。
【図4】実施形態２に係る冷却装置の動作原理を示す模式的断面図である。
【図5】実施形態２に係る冷却装置の他例を示す模式的断面図である。
【図6】実施形態３に係る冷却装置の模式的断面図である。
【図7】実施形態３に係る冷却装置の動作原理を示す模式的断面図である。
【図8】実施例１に係る液晶プロジェクタの冷却装置及びその近傍の構成を示す模式的縦断面図である。
【図9】図８に示す液晶ユニットに供給された冷却風の挙動を示す模式図である。
【図10】実施例２に係る液晶プロジェクタの冷却装置及びその近傍の構成を示す模式的縦断面図である。
【図11】図１０に示す液晶ユニットに供給された冷却風の挙動を示す模式図である。
【図12】実施例３に係る液晶プロジェクタの冷却装置及びその近傍の構成を示す模式的横断面図である。
【図13】実施例３に係る液晶プロジェクタの冷却装置及びその近傍の構成を示す模式的縦断面図である。
【図14】実施例４に係る液晶プロジェクタの冷却装置及びその近傍の構成を示す模式的縦断面図である。
【図15】図１４に示す液晶ユニットに供給された冷却風の挙動を示す模式図である。
【図16】実施例５に係る液晶プロジェクタの冷却装置及びその近傍の構成を示す模式的横断面図である。
【図17】実施例５に係る液晶プロジェクタの冷却装置及びその近傍の構成を示す模式的縦断面図である。
【図18】実施例６に係る液晶プロジェクタの冷却装置及びその近傍の構成を示す模式的縦断面図である。
【図19】図１８に示す液晶ユニットに供給された冷却風の挙動を示す模式図である。
【図20】一般的な液晶プロジェクタの外観及び内部構造を示す斜視図である。
【図21】一般的な液晶プロジェクタの内部構造を示す模式図である。
【図22】従来の液晶プロジェクタが備える冷却装置を示す模式図である。
【図23】液晶パネルに供給される冷却風の風速と動作温度との関係を示す図である。
【図24】液晶パネル及び偏光板の光透過面を示す模式図である。
【符号の説明】
【0095】
　１　液晶プロジェクタ

２　液晶ユニット
３　冷却ファン
４　空冷ダクト
１１　入射側偏光板
１２　液晶パネル
１３　出射側偏光板
１５　ファン送風
１６　吐出口
１９ａ、１９ｂ　共鳴ノズル
２０ａ、２０ｂ、２０ｃ　第１のオリフィスプレート
２１ａ、２１ｂ、２１ｃ　第２のオリフィスプレート
２２ａ、２２ｂ、２２ｃ　共鳴室
２３ａ、２３ｂ、２３ｃ　脈動噴流（共鳴噴流）
２４ａ、２４ｂ、２４ｃ　流体素子振動器
２５ａ、２５ｂ　ダクト排気口
２６ａ、２６ｂ、２６ｃ　連結ダクト
２７ａ、２７ｂ、２７ｃ　吐出ノズル
２８ａ、２８ｂ、２８ｃ　制御口
２９　圧電素子
３０ａ、３０ｂ　ブロック
３１　ダクト
３２ａ、３２ｂ、３２ｃ、３２ｄ、３２ｅ、３２ｆ　冷却装置

【図1】

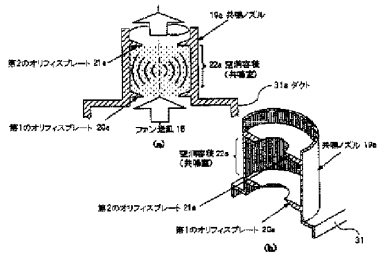

【図2】

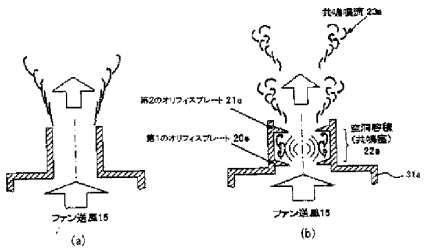

【図3】

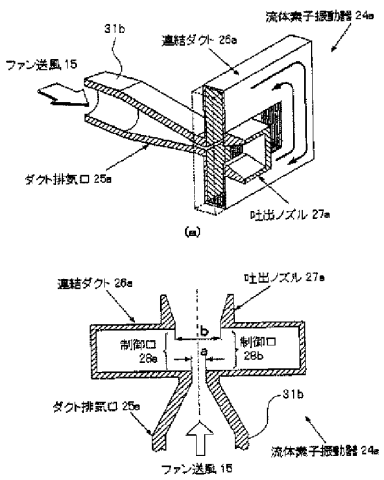

【図4】

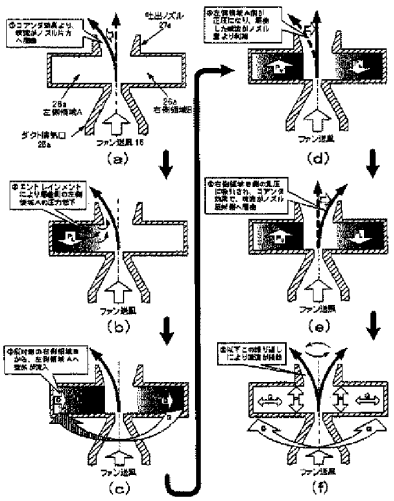

【図5】

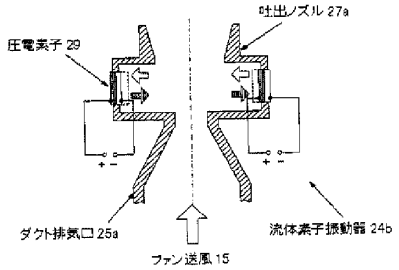

【図6】

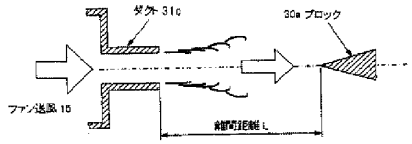

【図7】

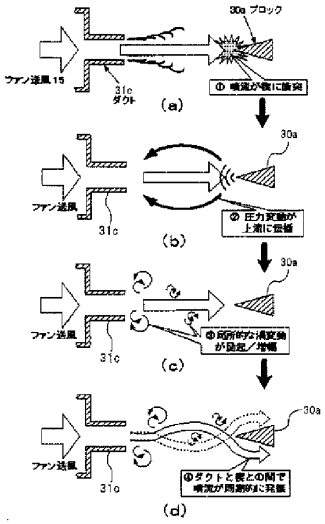

【図8】

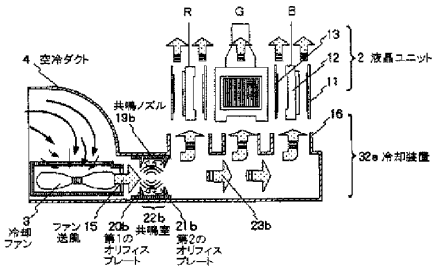

【図9】

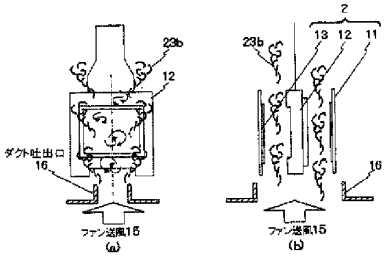

【図10】

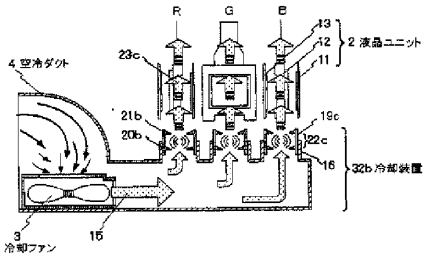

【図11】

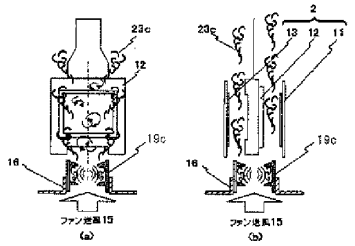

【図12】

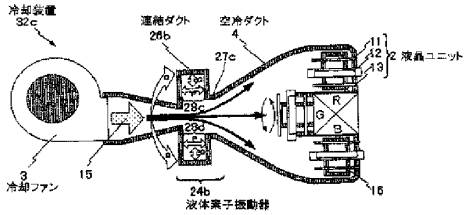

【図13】

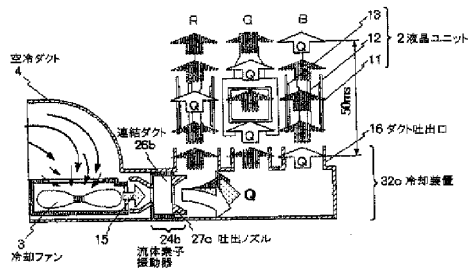

【図14】

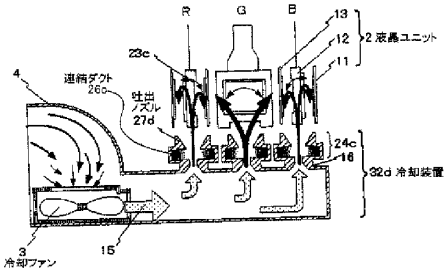

【図15】

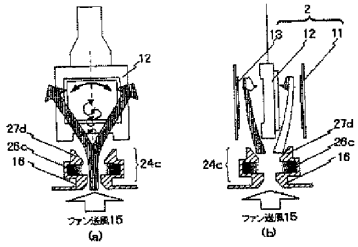

【図16】

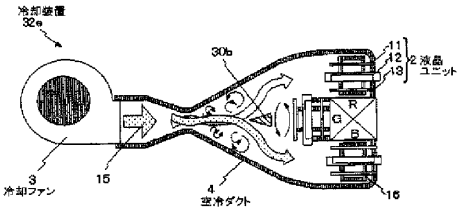

【図17】

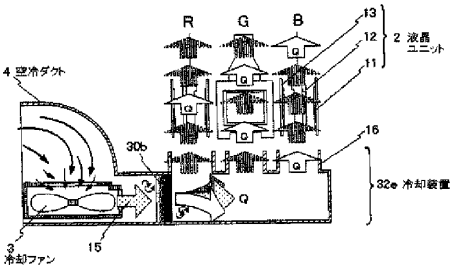

【図18】

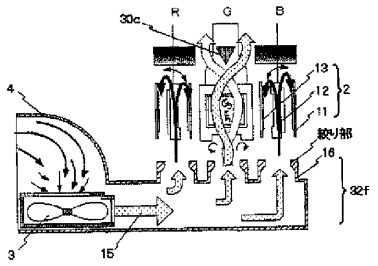

【図19】

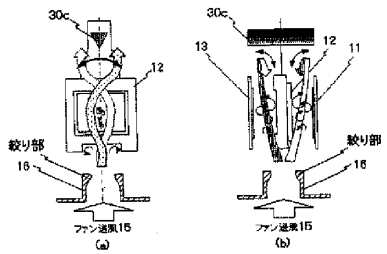

【図20】

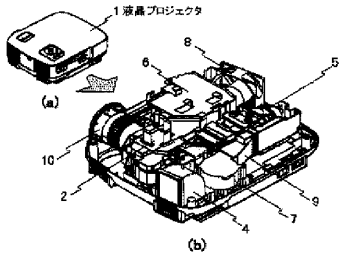

【図21】

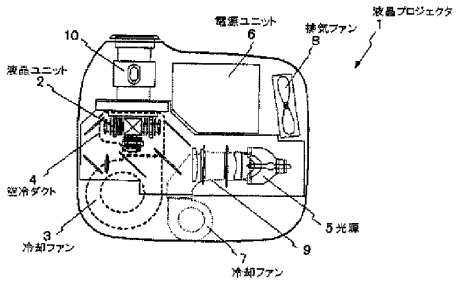

【図22】

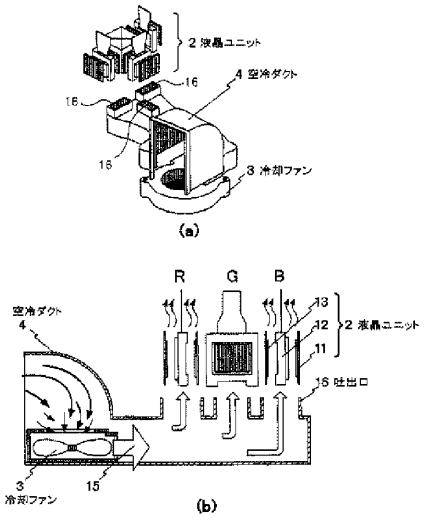

【図23】

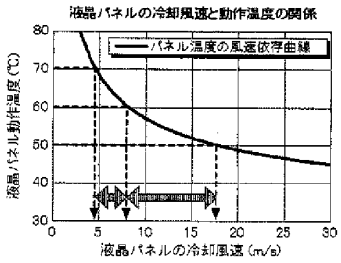

【図24】

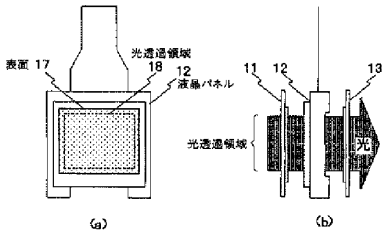

Ｆターム(参考) 2K103 AA05 AA16 BC16 BC47 BC50 CA60 DA03 DA06 DA18 DA20
DA23 DA25

Espacenet

Bibliographic data: KR100666961 (B1) — 2007-01-10

BACK LIGHT APPARATUS

Inventor(s):	KIM TAE SOO [KR] +	
Applicant(s):	PHICOM CORP [KR] +	
Classification:	**- international:**	***G02F1/13357***
	- European:	
Application number:	KR20050075759 20050818	
Priority number(s):	KR20050075759 20050818	
Also published as:	JP2007053078 (A) CN1916734 (A) CN100409080 (C)	

Abstract of KR100666961 (B1)

A backlight unit is provided to minimize the brightness variation of light applied to an object to be tested, thereby accurately identifying defects of the object to be tested, by partially controlling the reflective amount of light reflected from a reflective plate. A light source(110) emits a light to an object to be tested. A reflective plate(120) reflects the light emitted from the light source to the object to be tested. A brightness controlling member (130) is provided on the reflective plate. The brightness controlling member partially controls the amount of light reflected from the reflective plate, thereby making the brightness of light applied to the object to be tested uniform. The brightness controlling member corresponds to brightness holes, which are formed in the reflective plate.

Last updated: 14.03.2012 Worldwide Database 5.7.36; 92p

(19)대한민국특허청(KR)
(12) 등록특허공보(B1)

(51) 。Int. Cl.
G02F 1/13357 (2006.01)

(45) 공고일자 2007년01월10일
(11) 등록번호 10-0666961
(24) 등록일자 2007년01월04일

(21) 출원번호 10-2005-0075759
(22) 출원일자 2005년08월18일
심사청구일자 2005년08월18일

(65) 공개번호
(43) 공개일자

(73) 특허권자 주식회사 파이컴
서울 금천구 가산동 60-29번지

(72) 발명자 김태수
서울 금천구 독산1동 144-51 동만오피스텔 603호

(74) 대리인 장성구
김원준

심사관 : 강정태

전체 청구항 수 : 총 10 항

(54) 백 라이트 장치

(57) 요약

본 발명은 백 라이트 장치에 관한 것으로서, 피검사체를 조명하기 위한 백 라이트 장치에 있어서, 피검사체로 광을 발산하는 광원과, 광원으로부터 발산하는 광을 피검사체로 반사시키는 반사판과, 반사판에 마련되어 반사판의 광반사량을 부분적으로 보정함으로써 피검사체에 조사되는 광의 휘도가 균일하도록 하는 휘도보정수단을 포함한다. 따라서, 본 발명은 반사판의 광반사량을 용이하게 부분적으로 보정함으로써 광원의 특성이나 배열에 의해 필연적으로 발생되는 피검사체에 조사되는 광의 휘도 편차를 최소화하여 뛰어난 휘도 균일성을 가지도록 하고, 검사장비가 높은 휘도를 요구하더라도 이로 인해 광원으로부터 발생되는 열을 장치 내부에 정체됨이 없이 신속하고도 효과적으로 방출시킴으로써 피검사체가 온도로 인해 변형이 발생하는 것을 최소화함과 아울러 장비의 에러 발생을 방지하는 효과를 가지고 있다.

대표도

도 2

특허청구의 범위

청구항 1.
삭제

청구항 2.

SEC et al. v. MRI
SEC Exhibit 1020.0160
IPR2023-00255

피검사체를 검사를 위해 조명하는 백 라이트 장치에 있어서,

상기 피검사체로 광을 발산하는 광원과,

상기 광원으로부터 발산하는 광을 상기 피검사체로 반사시키는 반사판과,

상기 반사판에 마련되어 상기 반사판의 광반사량을 부분적으로 보정함으로써 상기 피검사체에 조사되는 광의 휘도가 균일하도록 하는 휘도보정수단을 포함하며,

상기 휘도보정수단은,

상기 반사판에 형성되어 광을 통과시키는 휘도보정홀인 것

을 특징으로 하는 백 라이트 장치.

청구항 3.

피검사체를 검사를 위해 조명하는 백 라이트 장치에 있어서,

상기 피검사체로 광을 발산하는 광원과,

상기 광원으로부터 발산하는 광을 상기 피검사체로 반사시키는 반사판과,

상기 반사판에 마련되어 상기 반사판의 광반사량을 부분적으로 보정함으로써 상기 피검사체에 조사되는 광의 휘도가 균일하도록 하는 휘도보정수단을 포함하며,

상기 휘도보정수단은,

상기 반사판에 부착되어 광을 흡수하는 휘도보정시트인 것

을 특징으로 하는 백 라이트 장치.

청구항 4.

제 2 항에 있어서,

상기 휘도보정홀은,

다수로 이루어지며, 상기 반사판의 가장자리로부터 중심으로 갈수록 조밀하게 분포되는 것

을 특징으로 하는 백 라이트 장치.

청구항 5.

제 2 항에 있어서,

상기 휘도보정홀은,

다수로 이루어지며, 상기 반사판의 가장자리로부터 중심으로 갈수록 직경 또는 폭이 증가하는 것

SEC et al. v. MRI
SEC Exhibit 1020.0161
IPR2023-00255

을 특징으로 하는 백 라이트 장치.

청구항 6.

제 2 항에 있어서,

상기 휘도보정홀은,

다수로 이루어지며, 상기 반사판의 가장자리로부터 중심으로 갈수록 간격이 작아지는 것

을 특징으로 하는 백 라이트 장치.

청구항 7.

제 2 항 또는 제 3 항에 있어서,

상기 광원 및 상기 반사판이 설치되며, 온도차이로 인해 발생되는 고온부분에 흡입구를, 저온부분에 방출구를 각각 형성하는 케이스와,

상기 흡입구 및 상기 방출구를 통해 공기를 각각 흡입 및 방출시키도록 상기 케이스에 설치되는 흡입팬 및 방출팬

을 더 포함하는 백 라이트 장치.

청구항 8.

제 2 항에 있어서,

상기 휘도보정홀을 통해 상기 광원에 냉각을 위한 공기를 송풍하도록 상기 휘도보정홀에 인접하도록 설치되는 냉각팬

을 더 포함하는 백 라이트 장치.

청구항 9.

제 3 항에 있어서,

상기 휘도보정시트는,

다수로 이루어지며, 상기 반사판의 가장자리로부터 중심으로 갈수록 조밀하게 분포되는 것

을 특징으로 하는 백 라이트 장치.

청구항 10.

제 3 항에 있어서,

상기 휘도보정시트는,

SEC et al. v. MRI
SEC Exhibit 1020.0162
IPR2023-00255

다수로 이루어지며, 상기 반사판의 가장자리로부터 중심으로 갈수록 직경 또는 폭이 증가하는 것

을 특징으로 하는 백 라이트 장치.

청구항 11.

제 3 항에 있어서,

상기 휘도보정시트는,

다수로 이루어지며, 상기 반사판의 가장자리로부터 중심으로 갈수록 간격이 작아지는 것

을 특징으로 하는 백 라이트 장치.

명세서

발명의 상세한 설명

발명의 목적

발명이 속하는 기술 및 그 분야의 종래기술

본 발명은 백 라이트 장치에 관한 것으로서, 보다 상세하게는 피검사체에 대한 휘도의 균일성을 향상시킴으로써 피검사체에 대한 정확한 검사가 가능하도록 하며, 열을 신속하고도 효과적으로 배출시킴으로써 열로 인한 휘도의 편차 증가, 피검사체나 주변부품에 대한 손상을 방지하는 백 라이트 장치에 관한 것이다.

일반적으로, LCD(liquid crystal display) 패널 등과 같은 피검사체에 발생된 결함을 검사하는 장비는 피검사체에 광을 조사함으로써 피검사체 또는 피검사체에 존재하는 결함과 충돌한 광의 회절, 산란, 반사, 또는 투과에 의하여 LCD 패널과 같은 피검사체에서 결함을 찾아낼 수 있도록 하기 위해 중요한 요소인 백 라이트 장치가 마련된다.

이러한 종래의 LCD 패널 등과 같은 검사장비에 사용되는 백 라이트 장치를 첨부된 도면을 참조하여 설명하면 다음과 같다.

도 1은 종래의 기술에 따른 백 라이트 장치를 도시한 분해사시도이다. 도시된 바와 같이, 종래의 백 라이트 장치(10)는 케이스(11)와, 케이스(11)에 램프받침대(12)에 의해 병렬로 배열되도록 설치되어 피검사체를 향하여 광을 발산하는 다수의 램프(13)와, 램프(13)의 하측에 설치되어 램프(13)로부터 발산되는 광을 반사하는 반사판(14)과, 케이스(11)에 형성되는 개구(11a)를 통해 냉각을 위한 공기를 순환시키는 팬(15)을 포함한다. 또한, 케이스(11) 내측에 안정기(16)가 설치된다.

이와 같은 종래의 기술에 따른 백 라이트 장치(10)는 램프(13)에 의해 발산되는 광이 확산판(1)을 통해서 상판(2)을 통과하여 LCD 패널 등과 같은 피검사체로 조사된다. 이 때, 램프(13)로부터 발산되는 광은 반사판(14)에 의해 반사되어 피검사체로 조사된다.

이러한 종래의 백 라이트 장치(10)는 정확한 검사를 위하여 높은 휘도를 요구하고 있음에도 불구하고, 램프(13)의 특성 또는 배열에 따라 피검사체에 조사되는 광의 휘도 편차가 필연적으로 발생하게 되며, 이로 인해 피검사체에서 중심부분과 가장자리부분간의 휘도 편차가 25%를 상회하는 문제점을 가지고 있었다.

휘도 편차가 필연적으로 발생되는 이유를 보다 자세하게 설명하면 먼저, 종래의 백 라이트 장치(10)는 케이스(11)를 포함하여 구성부품들의 색상이 보통 흑색으로 이루어지는데, 광을 잘 흡수하는 흑색의 특성으로 인해 피검사체에 조사되는 광의 휘도는 중심부분보다 케이스(11)측인 가장자리부분이 낮게 된다.

SEC et al. v. MRI
SEC Exhibit 1020.0163
IPR2023-00255

그리고, 케이스(11) 내부에 마련된 고온인 램프(13)의 열을 배출하기 위하여 케이스(11) 측면에 팬(15)이 설치되어 있으나, 팬(15)이 케이스(11)내의 중심 부근에 대한 열을 외부로 제대로 배출시키지 못함으로써 케이스(11)내의 중심에 배치된 램프(13)의 온도가 케이스(11)내의 가장자리에 배치된 램프(13)의 온도보다 높아지게 된다. 따라서 온도가 높을수록 휘도가 높아지는 램프(13)의 특성으로 인해 케이스(11)내의 중심에 배치되는 램프(13)는 온도가 높아져서 높은 휘도를 가지고, 이와는 반대로 케이스(11)내의 가장자리에 배치되는 램프(13)는 온도가 낮아져서 낮은 휘도를 가지게 된다.

즉, 케이스(11)의 색상 및 케이스(11) 내부에 배치된 램프(13)의 온도 차이에 의한 원인에 의하여 피검사체로 제공되는 광의 휘도가 기준보다 가장자리 부근은 더 낮아지고, 중심 부근은 더 높아지게 되어 피검사체에 조사되는 광의 휘도 편차는 더욱 증가되는 문제점이 있었다.

이와 같이, 피검사체에 조사되는 광의 휘도 편차가 큰 값을 가지게 됨으로써 피검사체의 특정부분에 대한 검사가 제대로 이루어지지 않게 되며, 이로 인해 피검사체의 결점을 정확하게 판단하기 어려워 불량인 피검사체를 정상으로 판정하거나, 검사장비의 에러를 유발하여 정상적인 피검사체를 불량으로 판정하는 등 검사 작업에 많은 문제점을 발생시키고 있다.

특히, LCD 패널 검사장비는 암실에서 사용됨으로써 본체 대부분의 색상이 흑색이기 때문에 램프(13)로부터 발산되는 광을 잘 흡수하므로 피검사체에 대한 휘도 편차를 더욱 가중시키며, 이러한 장비 특성으로 인해 피검사체에서의 휘도 균일성이 한층 요구되고 있는 실정이다.

이러한 문제를 해결하기 위하여 다수의 램프(13)를 여러 영역으로 분할함으로써 각 영역에 대한 휘도를 조절하는 방법에 의해 원하는 휘도 균일성을 유지시키고 있으나, 각각의 영역 분할을 위해 길이가 짧은 램프를 사용하게 됨으로써 많은 개수의 램프(13)가 소요될 뿐만 아니라 안정기(16)의 개수도 늘어나서 장비의 크기, 사용 전력, 램프의 교체 회수 등이 크게 늘어날 뿐만 아니라 고열을 발생시키게 되며, 휘도 조절 작업이 번거롭다는 등 여러 가지 문제를 가지게 되었다.

또한, 종래의 백 라이트 장치(10)는 피검사체의 정확한 검사를 위해 피검사체와의 거리가 한정됨으로써 피검사체에 열이 쉽게 전달되어 휘게 됨으로써 변형에 따른 불량을 초래하며, 주변의 구성부품에 고온으로 인한 악영향을 초래함으로써 검사 작업의 정확성과 장비의 가동률을 저하시키고 있다. 이러한 문제점 해결을 위해 팬(15)을 구비하고 있으나, 케이스(11)내의 중심부분에 대한 열을 외부로 제대로 배출하지 못하며, 특히 반사판(14)이 내측 공기의 흐름에 장애가 됨으로써 열 배출을 더욱 어렵게 하였다.

이러한 문제점들을 해결함으로써 높은 휘도를 유지하면서도 고온에 의한 영향을 최소화할 수 있는 백 라이트 장치의 개발이 필요하게 되었다.

또한, 현재의 백 라이트 장치로는 대형화 장비에 대응할 때 휘도 편차가 더욱 증가하게 되는 문제점이 있었으나, 이러한 장비 특성으로 인해 피검사체에서의 휘도 균일성이 한층 요구되고 있는 실정이다.

발명이 이루고자 하는 기술적 과제

본 발명은 상술한 종래의 문제점을 해결하기 위한 것으로서, 본 발명의 목적은 피검사체에 대한 휘도의 균일성을 향상시킴으로써 피검사체에 대한 정확한 검사가 가능하도록 하며, 열을 신속하고도 효과적으로 배출시킴으로써 열로 인한 휘도의 편차 증가, 피검사체나 주변부품에 대한 손상을 방지하는 백 라이트 장치를 제공하는데 있다.

이와 같은 목적을 실현하기 위한 본 발명은, 피검사체를 조명하기 위한 백 라이트 장치에 있어서, 피검사체로 광을 발산하는 광원과, 광원으로부터 발산하는 광을 피검사체로 반사시키는 반사판과, 반사판에 마련되어 반사판의 광반사량을 부분적으로 보정함으로써 피검사체에 조사되는 광의 휘도가 균일하도록 하는 휘도보정수단을 포함하는 것을 특징으로 한다.

발명의 구성

이하, 본 발명의 가장 바람직한 실시예를 첨부한 도면을 참조하여 본 발명의 기술분야에서 통상의 지식을 가진 자가 용이하게 실시할 수 있도록 더욱 상세히 설명하기로 한다.

SEC et al. v. MRI
SEC Exhibit 1020.0164
IPR2023-00255

도 2는 본 발명의 제 1 실시예에 따른 백 라이트 장치를 도시한 분해 사시도이다. 도시된 바와 같이, 본 발명에 따른 백 라이트 장치(100)는 LCD 패널 등과 같은 피검사체에 존재하는 결함을 검사하는 검사장비에 설치되어 피검사체에 광을 조사함으로써 회전, 산란, 반사, 투과 등 광의 여러 가지 성질에 의해 피검사체에 존재하는 결함을 검출하도록 하는 장치로서, 광을 발산하는 광원(110)과, 광을 반사시키는 반사판(120)과, 반사판(120)에 마련되는 휘도보정수단(130)을 포함한다.

광원(110)은 장시간의 수명을 가지는 발광다이오드(Light Emitting Diode, "LED"라고도 함), 또는 노이즈와 열의 방출이 적은 냉음극형광램프(Cold Cathode Fluorescent Lamp, "CCFL"라고도 함), 또는 고휘도 구현이 가능한 열음극형광램프(Hot Cathode Fluorescent Lamp"HCFL"이라고도 함), 또는 고휘도 구현과 함께 높은 휘도 균일성을 가지는 외부전극형광램프(External Electrode Fluorescent Lamp, "EEFL"라고도 함) 등이 사용될 수 있는데, 본 실시예에서 직관형광램프를 사용하였다.

광원(110)은 양단에 마련되는 미도시된 단자가 커넥터(111)에 의해 접속됨으로써 나란하게 다수로 배열된다.

반사판(120)은 광원(110)으로부터 발산하는 광을 피검사체로 반사시키며, 광원(110)의 일측, 예컨대, 하측에 인접하도록 위치한다. 또한, 반사판(120)은 스테인레스스틸 또는 알루미늄 재질로 제작되며, 광원(110)으로부터 발산되는 광을 효율적으로 반사하기 위하여 상면에 반사필름이 적층될 수 있다.

한편, 광원(110)과 반사판(120)의 설치를 위하여 케이스(150)가 마련된다.

케이스(150)는 광원(110)과 반사판(120)이 설치되기 위하여 케이스(150) 내측에 다수의 고정포스트(153)가 수직되게 형성되고, 이 고정포스트(153)에 반사판(120)과 광원(110)의 커넥터(111)가 미도시된 볼트나 스크루 등으로 고정된다. 또한, 반사판(120)과 커넥터(111)는 고정포스트(153)에 볼트나 스크루 등으로 고정되기 위하여 고정홀(121)과 고정부(112)가 각각 형성된다. 한편 케이스(110)는 내측에 다수의 안정기(154)가 설치된다.

휘도보정수단(130)은 반사판(120)에 마련되어 광원(110)으로부터 조사되어 반사판(120)으로부터 반사되는 광량을 부분적으로 보정함으로써 피검사체에 조사되는 광의 휘도가 균일하도록 한다.

휘도보정수단(130)은 도 2 및 도 3에 도시된 본 실시예에서 반사판(120)에 형성되어 광을 통과시키는 휘도보정홀이다.

휘도보정홀(130)은 피검사체에 도달하는 광의 휘도가 주변에 비해 높은 부분에 마주보도록 반사판(120)에 형성되며, 광원(110)의 광을 통과시킴으로써 반사판(120)의 부분적인 광 반사량을 줄인다.

휘도보정홀(130)은 효율적인 반사판(120)의 광반사량 부분 조절을 위하여 다수로 이루어지며, 광원(110)의 배열 등에 따른 구조적 특성으로 인해 중심부분이 가장자리에 비해 휘도가 높은 점을 감안하여 도 2 및 도 3에서 도시된 바와 같이, 반사판(120)의 가장자리로부터 중심으로 갈수록 조밀하게 분포되거나, 도 5에 도시된 바와 같이, 반사판(120)의 가장자리로부터 중심으로 갈수록 직경 또는 폭이 증가하거나, 도 6에 도시된 바와 같이, 반사판(120)의 가장자리로부터 중심으로 갈수록 간격이 작아지도록 형성된다.

한편, 케이스(150)는 광원(110)의 특성 및 배열 등에 따라 발생되는 온도차이로 인해 발생되는 고온부분에 흡입구(151)를 형성하고, 저온부분에 방출구(152)를 각각 형성하고 있다. 본 실시예에서는 케이스(150)에서 광원(110)의 측부와 마주보는 측면이 광원(110)을 전기적, 기계적으로 연결하는 커넥터(111)가 위치하는 측면에 비해 고온이므로, 케이스(150)는 광원(110)의 측부와 마주보는 측면에 다수의 흡입구(151)를, 커넥터(111)가 위치하는 측면에 다수의 방출구(152)를 각각 형성한다.

케이스(150)의 흡입구(151) 및 방출구(152)에는 공기를 흡입 및 방출시키기 위하여 흡입팬(160) 및 방출팬(170)이 각각 설치된다. 즉, 도 3에서 도시된 바와 같이, 흡입팬(160)은 외부의 공기를 흡입구(151)를 통해 흡입함으로써 케이스(150) 내의 고온부분을 통과하도록 하며, 방출팬(170)은 내부의 가열된 공기를 저온부분을 거쳐서 방출구(152)를 통해 외부로 방출시킨다.

한편, 광원(110)과 케이스(150)의 중심부분에 대한 직접적인 냉각을 통해 케이스(150)내의 온도를 효율적으로 낮추기 위한 냉각팬(180)을 더 포함할 수 있다.

SEC et al. v. MRI
SEC Exhibit 1020.0165
IPR2023-00255

냉각팬(180)은 휘도보정홀(130)을 통해 광원(110)에 냉각을 위한 공기를 송풍하도록 휘도보정홀(130)에 인접하도록 케이스(150)의 바닥면에 설치된다. 따라서, 도 4에 도시된 바와 같이, 냉각팬(180)에 의해 송풍되는 공기가 휘도보정홀(130)을 통해 광원(110)에 직접적으로 송풍됨으로써 광원(110)으로 인한 온도의 상승을 최대한 억제하며, 반사판(120)에 의한 공기의 흐름에 영향을 받지 않아 케이스(150)내, 특히 중심부분에 대한 냉각 효율을 향상시킨다.

휘도보정홀(130)을 통해 공기를 송풍할 수 있도록 냉각팬(180) 이외에도 펌핑력이나 압력에 의해 공기를 분사하는 에어노즐 등과 같은 다양한 송풍수단이 이용될 수 있다.

이와 같은 구조로 이루어진 본 발명의 제 1 실시예에 따른 백 라이트 장치(100)의 작용을 설명하면 다음과 같다.

LCD 패널 등과 같은 피검사체 검사를 위해 광원(110)으로부터 발산되는 광과 반사판(120)으로부터 반사되는 광이 피검사체로 조사되며, 이 때, 피검사체에서의 휘도가 높은 부분에 상응하는 위치에 형성되는 휘도보정홀(130)을 통해 광원(110)으로부터 발산되는 광이 통과함으로써 반사판(120)의 반사량을 부분적으로 보정하게 되며, 이로 인해 피검사체에 조사되는 광의 휘도가 균일하도록 한다.

또한, 도 3에서 도시된 바와 같이, 흡입팬(160)에 의해 외부의 공기를 흡입구(151)를 통해 흡입하여 케이스(150)내의 고온부분, 즉 광원(110)에서 열의 방출이 심한 부분으로 직접적으로 통과하도록 함으로써 고온부분이 1차적으로 냉각되도록 하며, 방출팬(170)에 의해 내부의 가열된 공기를 저온부분, 즉 광원(110)에서 열의 방출이 적은 커넥터(111) 연결부위로 통과시켜서 방출구(152)를 통해 외부로 방출시킴으로써 저온부분을 2차적으로 냉각시킨다. 이로 인해 케이스(150)의 고온부분과 저온부분간의 온도 편차를 줄이게 되며, 이로 인해 온도의 불균일성으로 인해 유발되는 광원(110)의 휘도 편차를 최소화할 수 있다.

도 4에 도시된 바와 같이, 냉각팬(180)에 의해 송풍되는 공기는 휘도보정홀(130)을 통해 광원(110)에 직접적으로 송풍되며, 이로 인해 광원(110)으로 인한 온도상승을 신속하고도 효율적으로 억제하며, 반사판(120)이 공기의 흐름을 방해하지 않게 됨으로써 케이스(150)내, 특히 중심부분에 대한 냉각 효율이 뛰어나도록 한다.

또한, 휘도보정홀(130)은 반사판(120)의 가장자리로부터 중심으로 갈수록 조밀하게 분포되거나, 직경 또는 폭이 증가하거나, 간격이 작아지도록 형성됨으로써 광원(110)의 배열 등에 따른 구조적 특성으로 인한 중심부분의 고휘도 문제를 효과적으로 해결할 수 있다.

도 7은 본 발명의 제 2 실시예에 따른 백 라이트 장치를 도시한 분해 사시도이다. 도시된 바와 같이, 본 발명의 제 2 실시예에 따른 백 라이트 장치(200)는 제 1 실시예(100)와 마찬가지로 광원(110)과, 반사판(120)과, 휘도보정수단(140)을 포함하고 있을 뿐만 아니라 케이스(150), 흡입팬(160) 및 방출팬(170)을 더 포함하고 있다. 따라서, 제 1 실시예(100)와 동일한 부분은 그 설명을 생략하기로 하고, 차이점에 대해서 상세히 설명하기로 하겠다.

본 실시예에 따른 휘도보정수단(140)은 반사판(120)에 부착되어 광을 흡수하는 휘도보정시트이다.

휘도보정시트(140)는 광을 흡수하기 위해서 검은 색으로 제작됨이 바람직하며, 필름과 같은 얇은 형상뿐만 아니라 플레이트와 같은 비교적 두꺼운 형상으로 제작될 수 있으며, 평면 형상은 원형, 타원형, 다각형, 그 밖에 직선과 곡률이 혼합될 수 있다. 또한, 휘도보정시트(140)는 반사판(120)에 착탈이 가능하도록 부착되기 위하여 부착면에 접착층을 가질 수 있다.

휘도보정시트(140)는 이전 실시예의 휘도보정홀(130)(도 2 및 도 3 등에 도시)과 마찬가지로 반사판(120)의 광반사량을 효과적으로 부분 조절하기 위하여 다수로 이루어지며, 광원(110)의 배열 등에 따른 구조적 특성으로 인해 중심부분이 가장자리에 비해 휘도가 높기 때문에 이를 반영하기 위하여 반사판(120)의 가장자리로부터 중심으로 갈수록 조밀하게 분포되거나, 직경 또는 폭이 증가하거나, 간격이 작아지도록 형성된다.

한편, 본 발명의 제 2 실시예(200) 뿐만 아니라 이전의 실시예(100)에 따른 휘도보정수단(130,140)을 피검사체에 요구되는 휘도 뿐만 아니라 정해진 편차이내의 휘도 균일성을 만족시키도록 형성 내지 부착시키기 위하여 반사판(120)에 마련되는 휘도보정수단(130,140)의 규격, 개수, 위치 등은 휘도 및 휘도 편차를 시뮬레이션할 수 있는 컴퓨터 프로그램을 사용함으로써 반사판(120)에 마련되는 휘도보정수단(130,140)의 적정한 규격, 개수, 위치 등을 1차적으로 구하게 되며, 이러한 데이터에 의한 휘도보정수단(130,140)이 실제로 마련되는 반사판(120)을 검사장비에 사용하여 피검사체의 여러 부분에 대한 휘도의 실측값들에 따라 최종적으로 휘도보정수단(130,140)의 규격, 개수, 반사판(120)에서의 위치를 구하게 된다.

SEC et al. v. MRI
SEC Exhibit 1020.0166
IPR2023-00255

이와 같은 구조를 가지는 본 발명의 제 2 실시예에 따른 백 라이트 장치(200)의 작용을 설명하면 다음과 같다.

광원(110)으로부터 발산되는 광은 도 8에서 도시된 바와 같이, 반사판(120)에 의해 반사되어 피검사체로 조사되나, 휘도 보정시트(140)에 도달하는 광은 흡수됨으로써 반사판(120)의 광반사량을 부분적으로 조정 내지 보정한다. 따라서, 이러한 휘도보정시트(140)가 피검사체에서 휘도가 비교적 높은 부분에 상응하는 위치에 마련됨으로써 피검사체에서 휘도가 비교적 높은 부분으로 조사되는 광의 량을 줄이게 됨으로써 피검사체에 조사된 광의 휘도를 전체적으로 균일하도록 한다.

발명의 효과

상술한 바와 같이, 본 발명에 따른 백 라이트 장치는 반사판의 광반사량을 용이하게 부분적으로 보정함으로써 광원의 특성이나 배열에 의해 필연적으로 발생되는 피검사체에 조사되는 광의 휘도 편차를 최소화하여 뛰어난 휘도 균일성을 가지도록 하고, 이로 인해 광원의 개수, 사용 전력, 유지 비용 등을 절감시키며, 검사장비가 피검사체의 결점을 정확하게 판별할 수 있도록 함으로써 피검사체의 불량여부를 제대로 판단하도록 하는 효과를 가지고 있다.

또한, 검사장비가 높은 휘도를 요구하더라도 이로 인해 광원으로부터 발생되는 열을 장치 내부에 정체됨이 없이 신속하고도 효과적으로 방출시킴으로써 피검사체가 온도로 인해 변형이 발생하는 것을 최소화하여 피검사체의 품질을 유지시키고, 주변부품이 열로 인해 손상되거나 에러를 유발시키는 방지하는 효과를 가지고 있다.

이상에서 설명한 것은 본 발명에 따른 백 라이트 장치를 실시하기 위한 하나의 실시예에 불과한 것으로서, 본 발명은 상기한 실시예에 한정되지 않고, 이하의 특허청구범위에서 청구하는 바와 같이 본 발명의 요지를 벗어남이 없이 당해 발명이 속하는 분야에서 통상의 지식을 가진 자라면 누구든지 다양한 변경 실시가 가능한 범위까지 본 발명의 기술적 정신이 있다고 할 것이다.

도면의 간단한 설명

도 1은 종래의 백 라이트 장치를 도시한 사시도이고,

도 2는 본 발명의 제 1 실시예에 따른 백 라이트 장치를 도시한 분해 사시도이고,

도 3은 본 발명의 제 1 실시예에 따른 백 라이트 장치를 도시한 평면도이고,

도 4는 도 3의 A-A'선에 따른 단면도이고,

도 5는 본 발명의 제 1 실시예에 따른 백 라이트 장치의 휘도보정홀의 다른 실시예를 도시한 평면도이고,

도 6은 본 발명의 제 1 실시예에 따른 백 라이트 장치의 휘도보정홀의 또 다른 실시예예를 도시한 평면도이고,

도 7은 본 발명의 제 2 실시예에 따른 백 라이트 장치를 도시한 분해 사시도이고,

도 8은 본 발명의 제 2 실시예에 따른 백 라이트 장치의 작용을 도시한 요부확대도이다.

< 도면의 주요 부분에 대한 부호의 설명 >

110 : 광원 111 : 커넥터

112 : 고정부 120 : 반사판

130,140 : 휘도보정수단 (130 : 휘도보정홀, 140 : 휘도보정시트)

150 : 케이스 151 : 흡입구

152 : 방출구 160 : 흡입팬

SEC et al. v. MRI
SEC Exhibit 1020.0167
IPR2023-00255

170 : 방출팬 180 : 냉각팬

도면

도면1

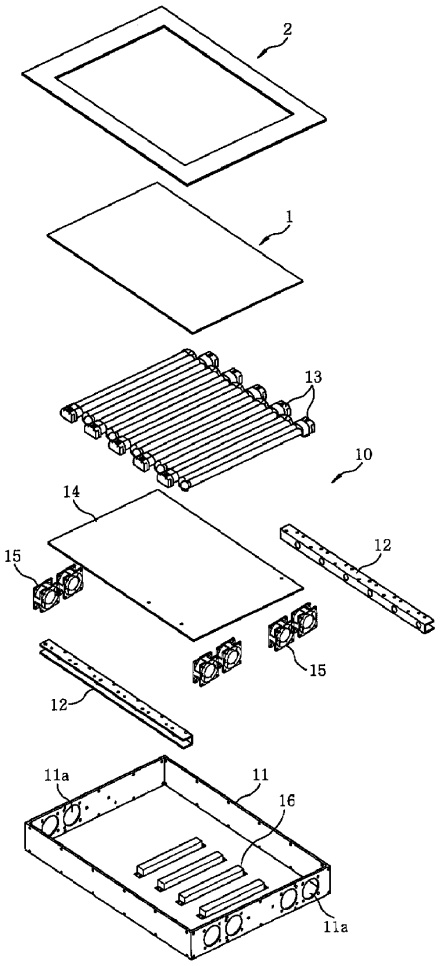

SEC et al. v. MRI
SEC Exhibit 1020.0168
IPR2023-00255

도면2

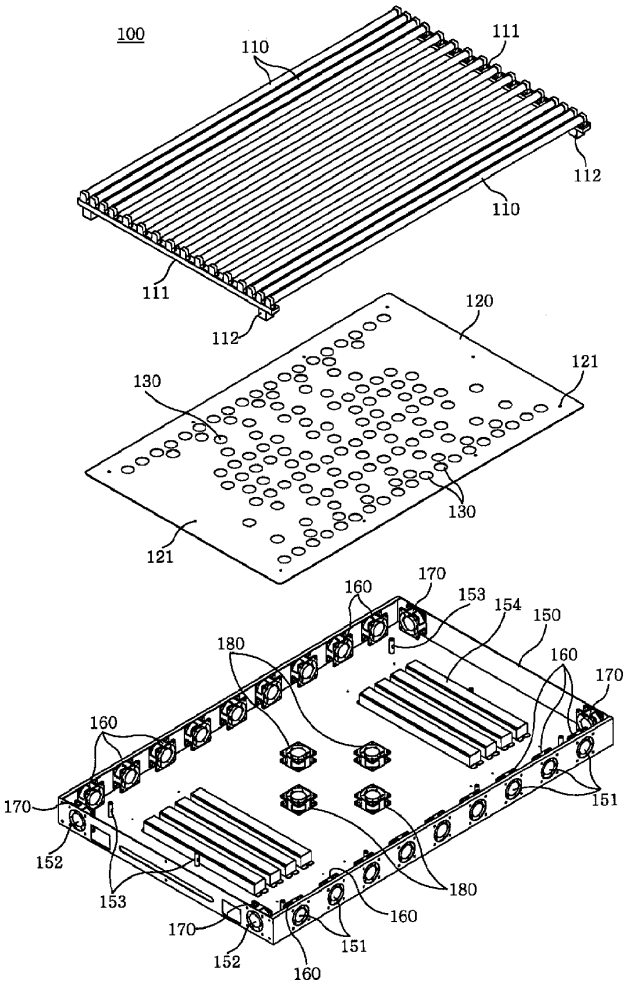

SEC et al. v. MRI
SEC Exhibit 1020.0169
IPR2023-00255

도면3

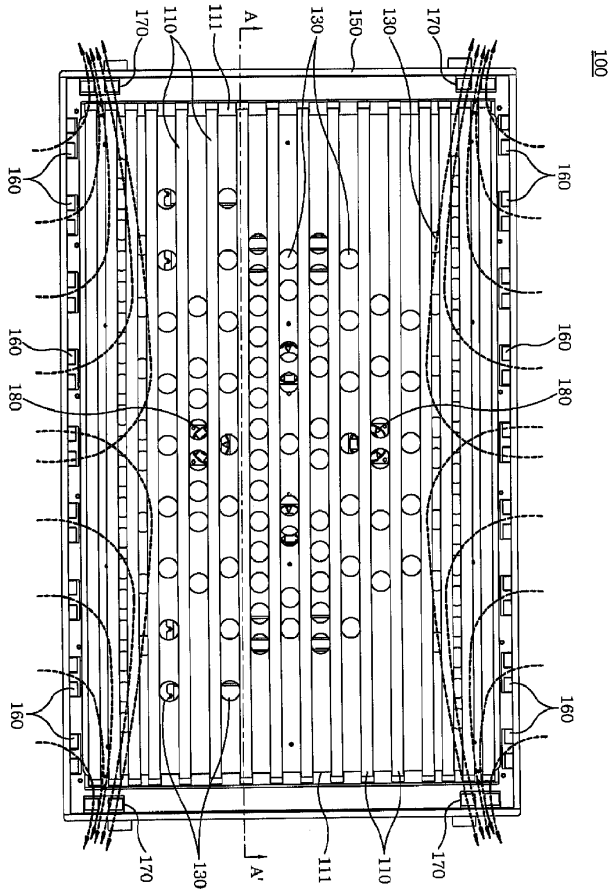

SEC et al. v. MRI
SEC Exhibit 1020.0170
IPR2023-00255

도면4

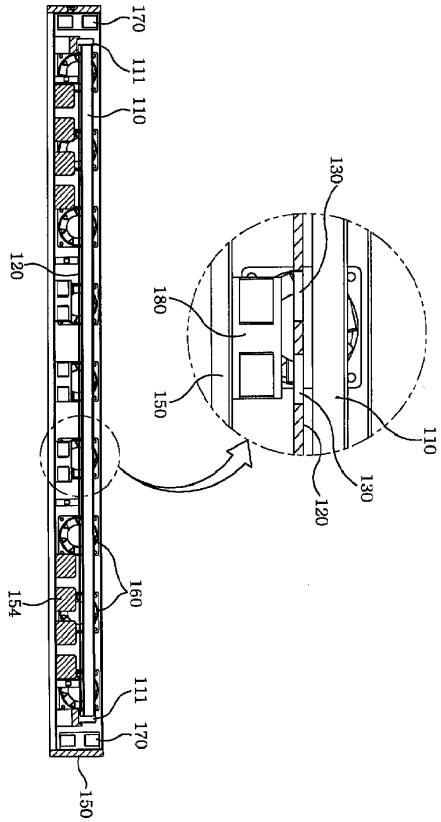

도면5

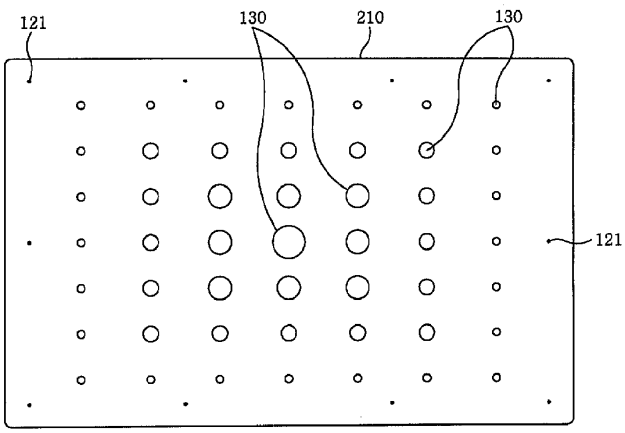

SEC et al. v. MRI
SEC Exhibit 1020.0171
IPR2023-00255

도면6

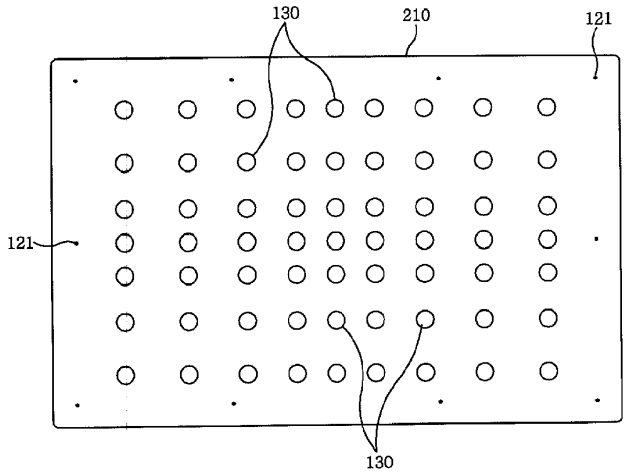

SEC et al. v. MRI
SEC Exhibit 1020.0172
IPR2023-00255

도면7

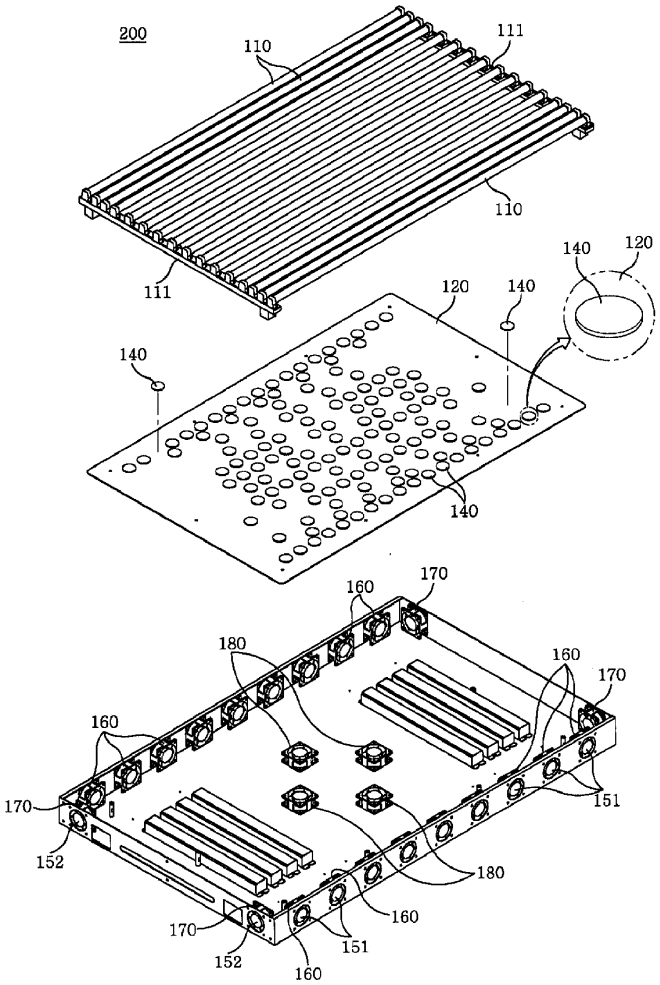

도면8

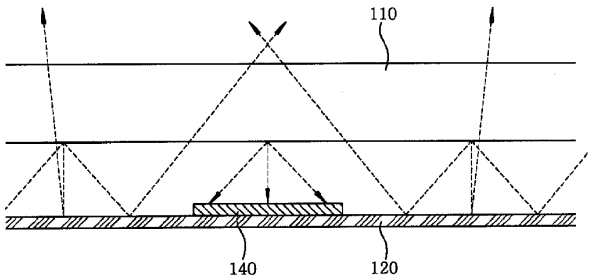

SEC et al. v. MRI
SEC Exhibit 1020.0173
IPR2023-00255

(19)대한민국특허청(KR)
(12) 공개특허공보(A)

(51) 。Int. Cl.[8]
G02F 1/13357 (2006.01)

(11) 공개번호 10-2006-0016469
(43) 공개일자 2006년02월22일

(21) 출원번호 10-2004-0064922
(22) 출원일자 2004년08월18일

(71) 출원인 삼성전자주식회사
경기도 수원시 영통구 매탄동 416

(72) 발명자 나동균
경기도 용인시 기흥읍 상갈리 487-5

(74) 대리인 박영우

심사청구 : 없음

(54) 백라이트 유닛 및 이를 포함하는 액정표시장치

요약

백라이트 유닛 및 이를 포함하는 액정표시장치가 개시된다. 백라이트 유닛은 광 발생부 및 수납 용기를 포함한다. 광 발생부는 광을 발생한다. 수납 용기는 광 발생부를 수납하고, 외부 공기가 흡입되는 흡기부 및 내부 공기를 방출하는 배기부가 형성된다. 이에 따라, 백라이트 유닛의 두께 및 무게가 감소되고, 냉각 효과가 증가된다.

대표도

도 1

색인어

백라이트 유닛, 냉각, 대류

명세서

도면의 간단한 설명

도 1은 본 발명의 일 실시예에 따른 백라이트 유닛의 분해 사시도이다.

도 2는 도 1의 백라이트 유닛을 하부에서 도시한 평면도이다.

도 3은 도 1의 백라이트 유닛의 냉각 과정을 설명하기 위한 측면도이다.

도 4는 본 발명의 다른 실시예에 따른 백라이트 유닛의 분해 사시도이다.

도 5는 도 4의 백라이트 유닛을 하부에서 도시한 평면도이다.

도 6은 도 4의 백라이트 유닛의 냉각 과정을 설명하기 위한 측면도이다.

SEC et al. v. MRI
SEC Exhibit 1020.0174
IPR2023-00255

도 7은 본 발명의 또 다른 실시예에 따른 백라이트 유닛의 분해 사시도이다.

도 8는 도 7의 백라이트 유닛을 하부에서 도시한 평면도이다.

도 9은 도 7의 백라이트 유닛의 냉각 과정을 설명하기 위한 측면도이다.

도 10는 본 발명의 또 다른 실시예에 따른 백라이트 유닛의 분해 사시도이다.

도 11는 도 10의 백라이트 유닛을 하부에서 도시한 평면도이다.

도 12는 도 10의 백라이트 유닛의 냉각 과정을 설명하기 위한 측면도이다.

도 13은 도 1의 백라이트 유닛을 갖는 액정표시장치를 나타내는 분해 사시도이다.

도 14는 도 7의 백라이트 유닛을 갖는 액정표시장치를 나타내는 분해 사시도이다.

<도면의 주요부분에 대한 부호의 설명>

100 : 면광원 장치 110 : 반사판

112 : 결합공 120 : 측벽

130 : 구동 기판 140 : 발광 다이오드 광원

200,300 : 수납 용기 210,310 : 바닥판

220,320 : 제1 측벽 230,330 : 제2 측벽

240,340 : 제3 측벽 250,350 : 제4 측벽

260,360 : 내부 공간 212,312 : 관통공

214,314 : 제1 구동 회로부 222a,322a,332a,342a,352a : 팬

222b,322b,332b,342b,352b : 팬 224,324 : 제2 구동 회로부

500,600 : 백라이트 유닛 800,900 : 액정표시장치

820 : 광학 시트 840 : 액정표시패널

842 : 박막 트랜지스터 기판 844 : 액정

846 : 컬러필터 기판 848 : 구동 모듈

860 : 샤시

발명의 상세한 설명

발명의 목적

발명이 속하는 기술 및 그 분야의 종래기술

SEC et al. v. MRI
SEC Exhibit 1020.0175
IPR2023-00255

본 발명은 백라이트 유닛 및 이를 포함하는 액정표시장치에 관한 것으로서, 보다 상세하게는 냉각 효과를 향상시킬수 있는 백라이트 유닛 및 이를 포함하는 액정표시장치에 관한 것이다.

일반적으로, 액정표시장치는 액정의 전기적 특성 및 광학적 특성을 이용하여 영상을 디스플레이 한다. 상기 액정표시장치는 CRT 등에 비하여 부피가 매우 작고 무게가 가벼운 장점을 갖고, 그 결과 휴대용 컴퓨터, 통신 기기, 액정 TV 등에 널리 사용되고 있다.

상기 액정을 제어하기 위해, 상기 액정표시장치는 상기 액정을 제어하는 액정 제어 파트 및 상기 액정에 광을 공급하는 광공급 파트를 필요로 한다. 상기 액정표시장치의 상기 광공급 파트로는 막대 형상을 갖는 냉음극선관 방식 램프(Cold Cathode Fluorescent Lamp, CCFL) 또는 도트 형상을 갖는 발광 다이오드(Light Emitting Diode, LED)가 주로 사용된다.

상기 발광 다이오드는 고색재현성의 장점을 갖는다. 그러나 상기 발광 다이오드는 발광 특성상 많은 열을 발생한다. 특히, 상기 발광 다이오드는 액정표시장치의 뒤로 발산되는 열이 많아, 상기 발광 다이오드를 수납하는 수납 용기의 온도가 매우 높다.

상기 수납 용기의 온도 증가를 방지하기 위해, 상기 수납 용기는 알루미늄과 같은 금속 재료를 갖는 히트 싱크(heat sink) 등을 포함할 수 있다. 그러나, 상기 수납 용기가 상기 히트 싱크를 포함하더라도, 상기 수납 용기의 두께 및 무게가 증가하여 액정표시장치의 두께 및 무게 또한 증가한다.

따라서, 상기 발광 다이오드를 액정표시장치의 광공급 파트로 사용하는 경우나, 상기 발광 다이오드 이외의 많은 열이 발생하는 다른 장치를 광공급 파트로 사용하는 경우, 상기 수납 용기의 온도가 증가하거나, 두께 및 무게가 증가한다.

발명이 이루고자 하는 기술적 과제

따라서, 본 발명의 일 목적은 냉각 효과가 증가되고, 두께 및 무게가 감소된 백라이트 유닛을 제공하는 것이다.

본 발명의 다른 목적은 상기한 백라이트 유닛을 갖는 액정표시장치를 제공하는 것이다.

발명의 구성 및 작용

이와 같은 본 발명의 일 목적을 구현하기 위하여 본 발명은 광 발생부 및 수납 용기를 포함하는 백라이트 유닛을 제공한다. 상기 광 발생부는 광을 발생한다. 상기 수납 용기는 상기 광 발생부를 수납하고, 외부 공기가 흡입되는 흡기부 및 내부 공기를 방출하는 배기부가 형성된다.

본 발명의 다른 목적을 구현하기 위하여 본 발명은 광 발생부 및 수납 용기를 포함하는 백라이트 유닛을 제공한다. 상기 광 발생부는 광을 발생한다. 상기 수납 용기는 상기 광 발생부를 수납하고, 외부 공기를 흡입하는 흡기부 및 내부 공기가 방출되는 배기부가 형성된다.

본 발명의 또 다른 목적을 구현하기 위하여 본 발명은 백라이트 유닛 및 액정표시패널을 포함한다. 상기 백라이트 유닛은 광을 발생하는 광 발생부 및 상기 광 발생부를 수납하고, 외부 공기가 흡입되는 흡기부 및 내부 공기를 방출하는 배기부가 형성된 수납 용기를 포함한다. 상기 액정표시패널은 상기 광 발생부로부터 출사되는 광을 이용하여 영상을 표시한다.

본 발명의 또 다른 목적을 구현하기 위하여 본 발명은 백라이트 유닛 및 액정표시패널을 포함한다. 상기 백라이트 유닛은 광을 발생하는 광 발생부 및 상기 광 발생부를 수납하고, 외부 공기를 흡입하는 흡기부 및 내부 공기가 방출되는 배기부가 형성된 수납 용기를 포함한다. 상기 액정표시패널은 상기 광 발생부로부터 출사되는 광을 이용하여 영상을 표시한다.

본 발명에 따르면, 백라이트 유닛의 두께 및 무게가 감소되고, 냉각 효과가 증가된다. 또한, 백라이트 유닛의 휘도 및 콘트래스트비(contrast ratio)의 저하를 방지한다.

이하, 첨부된 도면들을 참조하여 본 발명의 바람직한 실시예들에 따른 백라이트 유닛 및 이를 포함하는 액정표시장치에 대하여 상세하게 설명하지만, 본 발명이 하기 실시예들에 의해 제한되거나 한정되는 것은 아니다.

SEC et al. v. MRI
SEC Exhibit 1020.0176
IPR2023-00255

백라이트 유닛

실시예 1

도 1은 본 발명의 일 실시예에 따른 백라이트 유닛의 분해 사시도이고, 도 2는 도 1의 백라이트 유닛을 하부에서 도시한 평면도이다.

도 1 및 도 2를 참조하면, 백라이트 유닛(500)은 면광원 장치(100) 및 수납 용기(200)를 포함한다.

상기 면광원 장치(100)는 반사판(110), 측벽(120), 구동 기판(130) 및 복수의 발광 다이오드 광원(140)들을 포함한다.

상기 반사판(110)은 사각 평판 형상을 가지며, 상기 발광 다이오드 광원(140)들로부터 발생한 광 중 하방으로 향하는 광을 상방으로 반사한다. 상기 반사판(110)에는 상기 발광 다이오드 광원(140)이 결합될 수 있도록, 복수의 결합공(112)들이 형성된다.

상기 측벽(120)은 상기 반사판(110)의 에지부에 형성되어, 상기 면광원 장치(100)가 상기 수납 용기(200)와 용이하게 결합되도록 한다. 본 실시예에서, 상기 측벽(120)은 상기 반사판(110)의 대향하는 한 쌍의 에지부들에 형성된다.

상기 구동 기판(130)은 상기 반사판(110)의 하부에서 나란히 배열된다. 구동 전원이 상기 구동 기판(130)에 인가되어 상기 발광 다이오드 광원(140)들을 점등한다.

상기 발광 다이오드 광원(140)들은 상기 구동 기판(130) 상에 일렬로 배치되고, 상기 결합공(112)들을 관통하여 상기 반사판(110)의 상면에 위치하도록 결합된다. 바람직하게, 상기 발광 다이오드 광원(140)들은, 적색광을 발생하는 적색광 발광 다이오드(R), 녹색광을 발생하는 녹색광 발광 다이오드(G) 및 청색광을 발생하는 청색광 발광 다이오드(B)를 포함한다. 상기 적색광, 녹색광 및 청색광 발광 다이오드들(R,G,B)은 소정의 조합비에 의해 백색광을 발생한다. 예를 들어, 적색광 발광 다이오드(R), 녹색광 발광 다이오드(G) 및 청색광 발광 다이오드(B)의 개수의 비는 2:1:1, 또는 2:2:1로 구성될 수 있다. 또한, 상기 적색광, 녹색광 및 청색광 발광 다이오드들(R,G,B)은 도 1에 도시된 수보다 더 많이 배치될 수 있다. 이와는 달리, 상기 발광 다이오드 광원(140)들은 백색광을 발생하는 백색광 발광 다이오드를 포함할 수 있다.

상기 수납 용기(200)는 상기 면광원 장치(100)를 수납한다. 상기 수납 용기(200)는 바닥판(210), 제1 측벽(220), 제2 측벽(230), 제3 측벽(240) 및 제4 측벽(250)을 포함한다.

상기 바닥판(210)은 직사각형 평판의 형상을 갖고, 제1 구동 회로부(214) 및 복수의 관통공(212)들을 포함한다. 상기 제1 구동 회로부(214)는 상기 바닥판(210) 상에 배치되고, 상기 면광원 장치(100)를 구동한다. 상기 관통공(212)들은 상기 제1 구동 회로부(214)가 배치된 부분을 제외한 부분에 형성되고, 상기 바닥판(210)을 관통하여 형성된다. 상기 관통공(212)들을 통하여, 공기가 이동할 수 있다. 본 실시예에서, 상기 관통공(212)들은 외부 공기가 흡입되는 흡기부의 기능을 한다.

상기 제1 내지 제4 측벽들(220,230,240,250)은 상기 바닥판(210)의 에지부들로부터 각각 연장되어 수납 공간 및 내부 공간을 형성한다.

상기 제1 측벽(220)은 상기 바닥판(210)의 일 에지부에 배치되고, 바람직하게, 상기 바닥판(210)과 수직하지 않는다. 구체적으로, 상기 제1 측벽(220)은 상기 바닥판(210)에 대해서 외측으로 경사진다. 이와는 달리, 상기 제1 측벽(220)은 상기 바닥판(210)과 수직할 수 있다. 상기 제2 내지 제4 측벽들(230,240,250)은 상기 바닥판(210)의 다른 에지부들에 각각 배치되고, 상기 바닥판(210)과 수직한다. 상기 제2 측벽(230)은 상기 제1 측벽(220)과 인접하여 배치된다. 상기 제3 측벽(240)은 상기 제2 측벽(230)과 인접하여 배치되고, 상기 제1 측벽(220)과 대향한다. 상기 제4 측벽(250)은 상기 제1 및 제3 측벽들(220,240)과 인접하여 배치되고, 상기 제2 측벽(230)과 대향한다.

상기 제1 측벽(220)에는 복수의 팬(fan,222a)들이 형성된다. 상기 팬(222a)들은 공기를 상기 내부 공간에서 외부로 유동시키도록 작동된다. 따라서, 상기 면광원 장치(100)에서 발생된 열은 상기 내부 공간에서 외부로 전달된다. 본 실시예에서, 상기 팬(222a)들은 내부 공기를 방출하는 배기부의 기능을 한다.

SEC et al. v. MRI
SEC Exhibit 1020.0177
IPR2023-00255

상기 제1 측벽(220)은 제2 구동 회로부(224)를 더 포함할 수 있다. 상기 제2 구동 회로부(224)는 상기 제1 측벽(220) 상에 배치되고, 본 실시예에 따른 백라이트 유닛(100)을 광 공급 파트로 갖는 장치의 구성요소들, 예를 들면 액정표시장치의 액정표시패널을 구동하는 데에 사용될 수 있다. 이와는 달리, 상기 제2 구동 회로부(224)는 상기 제2 내지 제4 측벽들(230,240,250) 상에 배치될 수도 있다.

한편, 상기 제1 내지 제4 측벽들(220,230,240,250)은 상기 면광원 장치(100)의 상기 반사판(110)과 후크 결합 등의 방식으로 결합될 수 있다.

이하, 상술한 구조를 갖는 상기 백라이트 유닛의 냉각 과정을 도면을 참조하여 상세하게 설명한다.

도 3은 도 1의 백라이트 유닛의 냉각 과정을 설명하기 위한 측면도이다.

도 3을 참조하면, 상기 면광원 장치(100)의 상기 발광 다이오드 어레이 기판(110)이 구동되어 열이 발생한다. 상기 열에 의해 상기 면광원 장치(100) 및 상기 수납 용기(200) 사이의 상기 내부 공간(260)에 체류하는 공기의 온도가 상승한다. 상기 온도가 상승된 공기는 상기 제1 측벽(220)에 형성된 복수의 팬(222a)들에 의해서 상기 백라이트 유닛(500)의 외부로 방출된다. 상기 고온의 공기가 상기 백라이트 유닛(1000)의 외부로 방출되면, 상기 내부 공간(260)의 압력이 낮아진다. 따라서, 상기 백라이트 유닛(500)의 외부로부터 상기 내부 공간(260)의 고온의 공기보다 차가운 저온의 공기가 상기 관통공(212)들을 통하여 유입된다. 이에 따라, 고온의 내부 공기의 방출 및 저온의 외부 공기의 유입 과정들이 계속적으로 반복되고, 그 결과 상기 면광원 장치(100)에서 발생한 열은 공기의 흐름에 의하여 냉각된다.

특히, 본 실시예에 따른 냉각 과정은 주로 공기의 자연 대류(free convection) 현상에 의해서 이루어진다. 즉, 상기 면광원 장치(100)에서 발생한 열에 의해, 상기 내부 공간(260)의 공기의 온도가 상승하고, 상기 고온의 공기는 대류 작용에 의해 상기 내부 공간(260)의 상방으로 상승하여 상기 팬(222a)들에 의해 외부로 방출된다. 이어서, 외부의 저온의 공기는 상기 관통공(212)들을 통하여 상기 내부 공간(260)으로 유입되고, 다시 상기 면광원 장치에서 발생한 열에 의해, 온도가 상승하여 대류 작용에 의해 상승하게 되는 과정을 거친다.

본 실시예에서, 상기 관통공은 상기 바닥판 상에 형성되지만, 상기 관통공은 상기 제1 내지 제4 측벽들에 추가로 형성될 수 있고, 상기 제1 내지 제4 측벽들에만 형성될 수도 있다. 즉, 상기 관통공은 바닥판 및 상기 제1 내지 제4 측벽들 중 어느 하나 이상에 형성될 수 있다.

또한, 본 실시예에서, 상기 팬은 상기 제1 측벽 상에 형성되지만, 상기 팬은 바닥판 및 상기 제2 내지 제4 측벽들 중 어느 하나 이상에 추가로 형성될 수 있다.

한편, 본 실시예에서, 상기 발광 다이오드를 포함하는 상기 면광원 장치가 광 발생부로 이용되지만, 냉각이 요구되는 다른 광원을 포함하는 장치도 본 발명의 광 발생부로 적용될 수 있다.

본 실시예에 따르면, 상기 백라이트 유닛의 상기 수납 용기에 직접 냉각 기능을 수행하는 구성 요소들이 형성된다. 따라서, 상기 백라이트 유닛의 두께 및 무게가 감소된다. 또한, 상기 구성 요소들의 작동에 따른 상기 자연 대류 현상에 의해, 냉각 효과가 증가된다. 이에 따라, 상기 백라이트 유닛의 휘도 및 콘트래스트비의 저하를 방지한다.

<u>실시예 2</u>

도 4는 본 발명의 다른 실시예에 따른 백라이트 유닛의 분해 사시도이고, 도 5는 도 4의 백라이트 유닛을 하부에서 도시한 평면도이다.

도 4 및 도 5를 참조하면, 백라이트 유닛(600)은 면광원 장치(100) 및 수납 용기(300)를 포함한다.

본 실시예에 채용된 상기 면광원 장치(100)는 도 1에 도시된 면광원 장치와 구조 및 기능이 동일하므로, 반복 설명은 생략한다.

상기 수납 용기(300)는 상기 면광원 장치(100)를 수납한다. 상기 수납 용기(300)는 바닥판(310), 제1 측벽(320), 제2 측벽(330), 제3 측벽(340) 및 제4 측벽(350)을 포함한다.

SEC et al. v. MRI
SEC Exhibit 1020.0178
IPR2023-00255

상기 바닥판(310)은 직사각형 평판의 형상을 갖고, 제1 구동 회로부(314) 및 복수의 관통공(312)들을 포함한다. 상기 제1 구동 회로부(314)는 상기 바닥판(310) 상에 배치되고, 상기 면광원 장치(100)를 구동한다. 상기 관통공(312)들은 상기 제1 구동 회로부(314)가 배치된 부분을 제외한 부분에 형성되고, 상기 바닥판(310)을 관통하여 형성된다. 상기 관통공(312)들을 통하여, 공기가 이동할 수 있다. 본 실시예에서, 상기 관통공(312)들은 외부 공기가 흡입되는 흡기부의 기능을 한다.

상기 제1 내지 제4 측벽들(320,330,340,350)은 상기 바닥판(310)의 에지부들로부터 각각 연장되어 수납 공간 및 내부 공간을 형성한다.

상기 제1 내지 제4 측벽들(320,330,340,350)은 각각 상기 바닥판(310)의 일 에지부에 배치되고, 바람직하게, 상기 바닥판(310)과 수직하지 않는다. 구체적으로, 상기 제1 내지 제4 측벽들(320,330,340,350)은 상기 바닥판(310)에 대해서 외측으로 경사진다. 이와는 달리, 상기 제1 내지 제4 측벽들(320,330,340,350) 중 일부 또는 전부는 상기 바닥판(310)과 수직할 수 있다. 상기 제1 내지 제4 측벽들(320,330,340,350)은 차례로 서로 인접하여 배치된다. 상기 제1 측벽(320)과 상기 제3 측벽(340)은 서로 대향하고, 상기 제2 측벽(330)과 상기 제4 측벽(350)은 서로 대향한다.

상기 제1 내지 제4 측벽들(320,330,340,350)에는 각각 복수의 팬(322a,332a,342a,352a)들이 형성된다. 상기 팬(322a,332a,342a,352a)들은 공기를 상기 내부 공간에서 외부로 유동시키도록 작동된다. 따라서, 상기 면광원 장치(100)에서 발생된 열은 상기 내부 공간에서 외부로 전달된다. 본 실시예에서, 상기 팬(322a,332a,342a,352a)들은 내부 공기를 방출하는 배기부의 기능을 한다.

상기 제1 측벽(320)은 제2 구동 회로부(324)를 더 포함할 수 있다. 상기 제2 구동 회로부(324)는 상기 제1 측벽(320) 상에 배치되고, 본 실시예에 따른 백라이트 유닛(100)을 광 공급 파트로 갖는 장치의 구성요소들, 예를 들면 액정표시장치의 액정표시패널을 구동하는 데에 사용될 수 있다. 이와는 달리, 상기 제2 구동 회로부(324)는 상기 제2 내지 제4 측벽들(330,340,350) 상에 배치될 수도 있다.

한편, 상기 제1 내지 제4 측벽들(320,330,340,350)은 상기 면광원 장치(100)의 상기 반사판(110)과 후크 결합 등의 방식으로 결합될 수 있다.

이하, 상술한 구조를 갖는 상기 백라이트 유닛의 냉각 과정을 도면을 참조하여 상세하게 설명한다.

도 6은 도 4의 백라이트 유닛의 냉각 과정을 설명하기 위한 측면도이다.

도 6을 참조하면, 상기 면광원 장치(100)의 상기 구동 기판(130)이 구동되어 열이 발생한다. 상기 열에 의해 상기 면광원 장치(100) 및 상기 수납 용기(300) 사이의 상기 내부 공간(360)에 체류하는 공기의 온도가 상승한다. 상기 온도가 상승된 공기는 상기 제1 내지 제4 측벽들(320,330,340,350)에 형성된 복수의 팬(322a,332a,342a,352a)들에 의해서 상기 백라이트 유닛(2000)의 외부로 방출된다. 상기 고온의 공기가 상기 백라이트 유닛(2000)의 외부로 방출되면, 상기 내부 공간(360)의 압력이 낮아진다. 따라서, 상기 백라이트 유닛(2000)의 외부로부터 상기 내부 공간(360)의 고온의 공기보다 차가운 저온의 공기가 상기 관통공(312)들을 통하여 유입된다. 이에 따라, 고온의 내부 공기의 방출 및 저온의 외부 공기의 유입 과정들이 계속적으로 반복되고, 그 결과 상기 면광원 장치(100)에서 발생한 열은 공기의 흐름에 의하여 냉각된다.

본 실시예에서, 상기 관통공은 상기 바닥판 상에 형성되지만, 상기 관통공은 상기 제1 내지 제4 측벽들에 추가로 형성될 수 있고, 상기 제1 내지 제4 측벽들에만 형성될 수도 있다. 즉, 상기 관통공은 바닥판 및 상기 제1 내지 제4 측벽들 중 어느 하나 이상에 형성될 수 있다.

또한, 본 실시예에서, 상기 팬은 상기 제1 내지 제4 측벽들 상에 형성되지만, 상기 팬은 상기 바닥판에 추가로 형성될 수 있고, 상기 팬은 바닥판 및 상기 제1 내지 제4 측벽들 중 일부에만 형성될 수 있다. 즉, 상기 팬은 바닥판 및 상기 제1 내지 제4 측벽들 중 어느 하나 이상에 형성될 수 있다.

한편, 본 실시예에서, 상기 발광 다이오드를 포함하는 상기 면광원 장치가 광 발생부로 이용되지만, 냉각이 요구되는 다른 광원을 포함하는 장치도 본 발명의 광 발생부로 적용될 수 있다.

SEC et al. v. MRI
SEC Exhibit 1020.0179
IPR2023-00255

본 실시예에 따르면, 상기 백라이트 유닛의 상기 수납 용기에 직접 냉각 기능을 수행하는 구성 요소들이 형성된다. 특히, 상기 팬들이 상기 수납 용기의 여러 측벽들에 형성되어 상기 냉각 기능이 더욱 향상된다. 따라서, 상기 백라이트 유닛의 두께 및 무게가 감소된다. 또한, 상기 구성 요소들의 작동에 따른 상기 자연 대류 현상에 의해, 냉각 효과가 증가된다. 이에 따라, 상기 백라이트 유닛의 휘도 및 콘트래스트비의 저하를 방지한다.

실시예 3

도 7은 본 발명의 또 다른 실시예에 따른 백라이트 유닛의 분해 사시도이고, 도 8은 도 7의 백라이트 유닛을 하부에서 도시한 평면도이다. 제3 실시예에 있어서, 제1 실시예에서의 구성요소와 동일한 구조 및 기능을 갖는 구성요소에 대해서는 동일한 참조번호를 병기하고, 이들에 대한 구체적인 설명은 생략한다.

도 7 및 도 8을 참조하면, 복수의 팬(222b)들은 제1 측벽(220) 상에 형성된다. 상기 팬(222b)들은 공기를 외부에서 내부 공간으로 유동시키도록 작동된다. 따라서, 면광원 장치(100)에서 발생된 열은 상기 외부에서 유입된 상기 저온의 공기에 의해 냉각된다. 본 실시예에서, 상기 팬(222b)들은 외부 공기를 흡입하는 흡기부의 기능을 한다. 또한, 상기 팬(222b)들은 능동적으로 상기 면광원 장치(100)를 냉각시키는 냉각기의 기능을 한다.

이하, 상술한 구조를 갖는 상기 백라이트 유닛의 냉각 과정을 도면을 참조하여 상세하게 설명한다.

도 9는 도 7의 백라이트 유닛의 냉각 과정을 설명하기 위한 측면도이다.

도 9를 참조하면, 상기 면광원 장치(100)의 구동 기판(130)이 구동되어 열이 발생한다. 상기 열에 의해 상기 면광원 장치(100) 및 수납 용기(200) 사이의 상기 내부 공간(260)에 체류하는 공기의 온도가 상승할 수 있다. 여기서, 상기 팬(222b)들이 저온의 상기 백라이트 유닛(500)의 외부 공기를 고속으로 상기 내부 공간(260)으로 주입한다. 주입된 상기 외부 공기는 열이 발생하는 반사판(110)에 충돌하여 상기 반사판(110)을 냉각시킨다. 그 동안, 상기 팬(222b)들에 의해 상기 외부 공기가 내부로 유입되므로, 내부 압력이 증가한다. 따라서, 상기 내부 공간(260)의 공기는 관통공(212)들을 통하여 상기 백라이트 유닛(500)의 외부로 방출된다. 이에 따라, 상기 저온의 외부 공기의 유입 및 상기 고온의 내부 공기의 방출 과정들이 계속적으로 반복되고, 그 결과 상기 면광원 장치(100)에서 발생한 열은 공기의 흐름에 의하여 냉각된다.

특히, 본 실시예에 따른 냉각 과정은 주로 상기 냉각기의 기능을 하는 상기 팬(222b)들의 강제 대류(forced convection) 현상에 의해서 이루어진다. 즉, 상기 팬(222b)들에 의해 유입되는 상기 저온의 외부 공기는 열이 발생하는 상기 면광원 장치(100)에 고속으로 충돌하여 상기 면광원 장치(100)를 냉각시킨다. 따라서, 상술한 제1 실시예에 따른 팬(222a)들은 내부 공간(260)의 고온의 공기를 외부로 방출하는 소극적인 기능을 하는데 비하여, 본 실시예에 따른 상기 팬(222b)들은 적극적인 상기 냉각기의 기능을 한다. 일반적으로, 자연 대류 현상에 의한 열전달 효과보다 강제 대류 현상에 의한 열전달 효과가 더 크다. 따라서 본 실시예에 의한 냉각은 보다 효과적일 수 있다.

본 실시예에서, 상기 관통공은 바닥판 상에 형성되지만, 상기 관통공은 제1 내지 제4 측벽들에 추가로 형성될 수 있고, 상기 제1 내지 제4 측벽들에만 형성될 수도 있다. 즉, 상기 관통공은 상기 바닥판 및 상기 제1 내지 제4 측벽들 중 어느 하나 이상에 형성될 수 있다.

또한, 본 실시예에서, 상기 팬은 상기 제1 측벽 상에 형성되지만, 상기 팬은 바닥판 및 상기 제2 내지 제4 측벽들 중 어느 하나 이상에 추가로 형성될 수 있다.

한편, 본 실시예에서, 상기 발광 다이오드를 포함하는 상기 면광원 장치가 광 발생부로 이용되지만, 냉각이 요구되는 다른 광원을 포함하는 장치도 본 발명의 광 발생부로 적용될 수 있다.

본 실시예에 따르면, 상기 백라이트 유닛의 상기 수납 용기에 직접 냉각 기능을 수행하는 구성 요소들이 형성된다. 따라서, 상기 백라이트 유닛의 두께 및 무게가 감소된다. 또한, 상기 구성 요소들의 작동에 따른 상기 강제 대류 현상에 의해, 냉각 효과가 증가된다. 이에 따라, 상기 백라이트 유닛의 휘도 및 콘트래스트비 저하를 방지한다.

실시예 4

SEC et al. v. MRI
SEC Exhibit 1020.0180
IPR2023-00255

도 10은 본 발명의 또 다른 실시예에 따른 백라이트 유닛의 분해 사시도이고, 도 11은 도 10의 백라이트 유닛을 하부에서 도시한 평면도이다. 제4 실시예에 있어서, 제2 실시예에서의 구성요소와 동일한 구조 및 기능을 갖는 구성요소에 대해서는 동일한 참조번호를 병기하고, 이들에 대한 구체적인 설명은 생략한다.

도 10 및 도 11을 참조하면, 복수의 팬(322b,332b,342b,352b)들은 각각 제1 내지 제4 측벽들(320,330,340,350) 상에 형성된다. 상기 팬(322b,332b,342b,352b)들은 상기 면광원 장치(100)에서 발생된 열을 저온의 외부 공기를 흡입하여 냉각시킬 수 있다. 본 실시예에서, 상기 팬(322b,332b,342b,352b)들은 외부 공기를 흡입하는 흡기부의 기능을 한다. 또한, 상기 팬(322b,332b,342b,352b)들은 능동적으로 상기 면광원 장치(100)를 냉각시키는 냉각기의 기능을 한다.

이하, 상술한 구조를 갖는 상기 백라이트 유닛의 냉각 과정을 도면을 참조하여 상세하게 설명한다.

도 12는 도 10의 백라이트 유닛의 냉각 과정을 설명하기 위한 측면도이다.

도 12를 참조하면, 상기 면광원 장치(100)의 구동 기판(130)이 구동되어 열이 발생한다. 상기 열에 의해 상기 면광원 장치(100) 및 수납 용기(300) 사이의 내부 공간(360)에 체류하는 공기의 온도가 상승할 수 있다. 여기서, 상기 팬(322b,332b,342b,352b)들이 저온의 상기 백라이트 유닛(600)의 외부 공기를 고속으로 상기 내부 공간(360)으로 주입한다. 주입된 상기 외부 공기는 열이 발생하는 반사판(110)에 충돌하여 상기 반사판(110)을 냉각시킨다. 그 동안, 상기 팬(322b,332b,342b,352b)들에 의해 상기 외부 공기가 내부로 유입되므로, 내부 압력이 증가한다. 따라서, 상기 내부 공간(360)의 공기는 관통공(312)들을 통하여 상기 백라이트 유닛(600)의 외부로 방출된다. 이에 따라, 상기 저온의 외부 공기의 유입 및 상기 고온의 내부 공기의 방출 과정들이 계속적으로 반복되고, 그 결과 상기 면광원 장치(100)에서 발생한 열은 공기의 흐름에 의하여 냉각된다.

본 실시예에서, 상기 관통공은 바닥판 상에 형성되지만, 상기 관통공은 제1 내지 제4 측벽들에 추가로 형성될 수 있고, 상기 제1 내지 제4 측벽들에만 형성될 수도 있다. 즉, 상기 관통공은 상기 바닥판 및 상기 제1 내지 제4 측벽들 중 어느 하나 이상에 형성될 수 있다.

또한, 본 실시예에서, 상기 팬은 상기 제1 내지 제4 측벽들 상에 형성되지만, 상기 팬은 상기 바닥판에 추가로 형성될 수 있고, 상기 팬은 바닥판 및 상기 제1 내지 제4 측벽들 중 일부에만 형성될 수 있다. 즉, 상기 팬은 바닥판 및 상기 제1 내지 제4 측벽들 중 어느 하나 이상에 형성될 수 있다.

한편, 본 실시예에서, 상기 발광 다이오드를 포함하는 상기 면광원 장치가 광 발생부로 이용되지만, 냉각이 요구되는 다른 광원을 포함하는 장치도 본 발명의 광 발생부로 적용될 수 있다.

본 실시예에 따르면, 상기 백라이트 유닛의 상기 수납 용기에 직접 냉각 기능을 수행하는 구성 요소들이 형성된다. 특히, 상기 팬들이 상기 수납 용기의 여러 측벽들에 형성되어 상기 냉각 기능이 더욱 향상된다. 따라서, 상기 백라이트 유닛의 두께 및 무게가 감소된다. 또한, 상기 구성 요소들의 작동에 따른 상기 강제 대류 현상에 의해, 냉각 효과가 증가된다. 이에 따라, 상기 백라이트 유닛의 휘도 및 콘트래스트비의 저하를 방지한다.

<u>액정표시장치</u>

<u>실시예 5</u>

도 13은 도 1의 백라이트 유닛을 갖는 액정표시장치를 나타내는 분해 사시도이다.

도 13을 참조하면, 액정표시장치(800)는 백라이트 유닛(500), 액정표시패널(840) 및 샤시(860)를 포함한다.

본 실시예에 채용된 상기 백라이트 유닛(500)은 도 1에 도시된 백라이트 유닛과 구조 및 기능이 동일하므로, 반복 설명은 생략한다.

상기 액정표시패널(840)은 면광원 장치(100)로부터 출사되는 광을 이용하여 영상을 표시한다. 상기 액정표시패널(840)은 박막 트랜지스터(thin film transistor, TFT) 기판(842), 액정(844), 컬러필터 기판(846) 및 구동 모듈(848)을 포함한다.

SEC et al. v. MRI
SEC Exhibit 1020.0181
IPR2023-00255

상기 TFT 기판(842)은 매트릭스 형태로 배치된 화소 전극(미도시), 각 상기 화소 전극에 구동 전압을 인가하는 박막 트랜지스터(미도시), 게이트 라인(미도시) 및 데이터 라인(미도시)을 포함한다.

상기 컬러필터 기판(846)은 상기 TFT 기판(842)에 형성된 상기 화소 전극과 마주보도록 배치된 컬러필터(미도시), 상기 컬러필터 상에 형성된 공통전극(미도시)을 포함한다.

상기 액정(844)은 상기 TFT 기판(842)과 상기 컬러필터 기판(846) 사이에 개재된다.

상기 구동 모듈(848)은 상기 액정표시패널(840)을 구동한다. 이와는 달리, 상기 액정표시패널(840)을 구동하기 위하여 제2 구동 회로부(224)가 바닥판(210) 및 제1 내지 제4 측벽(220,230,240,250)들 중 어느 하나 상에 배치될 수 있다.

상기 컬러필터 기판(846)의 에지부는 상기 샤시(860)에 의하여 감싸여지고, 상기 샤시(860)의 일부는 수납용기(200)에 결합된다. 상기 샤시(860)는 외부 충격에 약한 상기 액정표시패널(840)의 깨짐을 방지하고, 상기 액정표시패널(840)의 유동을 방지한다.

상기 액정표시장치(800)는 상기 면광원 장치(100)로부터 출사된 상기 광의 휘도 균일성을 향상시키기 위한 광학 시트(820)를 더 포함할 수 있다. 상기 광학 시트(820)는 확산 시트, 프리즘 시트, 보호 시트 등을 포함할 수 있다.

상기 광학 시트(820)의 상측에는 미들 샤시(미도시)가 더 구비될 수 있다. 상기 미들 샤시는 상기 광학 시트(820)와 접하여 상기 광학 시트(820)를 상기 수납 용기(200) 측으로 가압한다.

본 실시예에 따르면, 상기 백라이트 유닛의 상기 수납 용기에 직접 냉각 기능을 수행하는 구성 요소들이 형성된다. 따라서, 상기 백라이트 유닛의 두께 및 무게가 감소된다. 또한, 상기 구성 요소들의 작동에 따른 상기 자연 대류 현상에 의해, 냉각 효과가 증가된다. 이에 따라, 상기 백라이트 유닛을 포함하는 액정표시장치의 두께 및 무게가 감소되고, 냉각 효과가 증가되며, 휘도 및 콘트래스트비의 저하를 방지한다.

실시예 6

도 14는 도 7의 백라이트 유닛을 갖는 액정표시장치를 나타내는 분해 사시도이다.

도 14을 참조하면, 액정표시장치(900)는 백라이트 유닛(600), 액정표시패널(840) 및 샤시(860)를 포함한다.

본 실시예에 따른 액정표시장치는 백라이트 유닛을 제외하면, 제5 실시예에 따른 액정표시장치와 구조 및 기능이 동일하다. 또한, 본 실시예에 채용된 상기 백라이트 유닛(600)은 도 2에 도시된 백라이트 유닛과 구조 및 기능이 동일하다.

본 실시예에 따르면, 상기 백라이트 유닛의 수납 용기에 직접 냉각 기능을 수행하는 구성 요소들이 형성된다. 따라서, 상기 백라이트 유닛의 두께 및 무게가 감소된다. 또한, 상기 구성 요소들의 작동에 따른 강제 대류 현상에 의해, 냉각 효과가 증가된다. 이에 따라, 상기 백라이트 유닛을 포함하는 액정표시장치의 두께 및 무게가 감소되고, 냉각 효과가 증가되며, 휘도 및 콘트래스트비의 저하가 방지된다.

발명의 효과

이상에서 설명한 바와 같이, 본 발명에 따르면 본 실시예에 따르면, 백라이트 유닛의 수납 용기에 직접 냉각 기능을 수행하는 구성 요소들이 형성된다. 따라서, 상기 백라이트 유닛의 두께 및 무게가 감소된다.

또한, 상기 구성 요소들의 작동에 따른 자연 대류 현상 또는 강제 대류 현상에 의해, 냉각 효과가 증가된다.

이에 따라, 상기 백라이트 유닛을 포함하는 액정표시장치의 두께 및 무게가 감소되고, 냉각 효과가 증가되며, 휘도 및 콘트래스트비의 저하를 방지한다.

앞서 설명한 본 발명의 상세한 설명에서는 본 발명의 바람직한 실시예를 참조하여 설명하였지만, 해당 기술분야의 숙련된 당업자 또는 해당 기술분야에 통상의 지식을 갖는 자라면 후술될 특허청구범위에 기재된 본 발명의 사상 및 기술 영역으로부터 벗어나지 않는 범위 내에서 본 발명을 다양하게 수정 및 변경시킬 수 있음을 이해할 수 있을 것이다.

SEC et al. v. MRI
SEC Exhibit 1020.0182
IPR2023-00255

(57) 청구의 범위

청구항 1.

광을 발생하는 광 발생부; 및

상기 광 발생부를 수납하고, 외부 공기가 흡입되는 흡기부 및 내부 공기를 방출하는 배기부가 형성된 수납 용기를 포함하는 백라이트 유닛.

청구항 2.

제 1 항에 있어서, 상기 수납 용기는 바닥판 및 상기 바닥판의 에지부로부터 연장된 복수의 측벽들을 포함하여 상기 광 발생부를 수납하기 위한 수납 공간을 제공하는 것을 특징으로 하는 백라이트 유닛.

청구항 3.

제 2 항에 있어서, 상기 측벽들은 제1 측벽, 상기 제1 측벽과 인접하여 배치된 제2 측벽, 상기 제2 측벽과 인접하여 배치되며 상기 제1 측벽과 대향하는 제3 측벽, 및 상기 제1 및 제3 측벽과 인접하여 배치되며 상기 제2 측벽과 대향하는 제4 측벽을 포함하는 것을 특징으로 하는 백라이트 유닛.

청구항 4.

제 3 항에 있어서, 상기 흡기부는 상기 바닥판 및 상기 제1 내지 제4 측벽들 중 적어도 하나에 형성된 1개 이상의 관통공을 포함하고, 상기 배기부는 상기 바닥판 및 상기 제1 내지 제4 측벽들 중 적어도 하나에 형성된 1개 이상의 팬을 포함하는 것을 특징으로 하는 백라이트 유닛.

청구항 5.

제 4 항에 있어서, 상기 관통공은 상기 바닥판을 관통하여 형성되고, 상기 팬은 상기 제1 측벽에 형성된 것을 특징으로 하는 백라이트 유닛.

청구항 6.

제 5 항에 있어서, 상기 제1 측벽은 상기 바닥판에 대해서 외측으로 경사진 것을 특징으로 하는 백라이트 유닛.

청구항 7.

제 4 항에 있어서, 상기 팬은 상기 제1 내지 제4 측벽들 상에 각각 형성된 것을 특징으로 하는 백라이트 유닛.

청구항 8.

제 2 항에 있어서, 상기 광 발생부를 구동하기 위하여 상기 수납 용기의 바닥판 및 상기 측벽들 중 어느 하나 상에 배치된 제1 구동 회로부를 더 포함하는 것을 특징으로 하는 백라이트 유닛.

SEC et al. v. MRI
SEC Exhibit 1020.0183
IPR2023-00255

청구항 9.

제 1 항에 있어서, 상기 광 발생부는 면광원 장치인 것을 특징으로 하는 백라이트 유닛.

청구항 10.

제 9 항에 있어서, 상기 면광원 장치는 발광 다이오드 광원을 포함하는 것을 특징으로 하는 백라이트 유닛.

청구항 11.

제 10 항에 있어서, 상기 면광원 장치는 상기 수납 용기 및 상기 발광 다이오드 광원 사이에 배치된 반사판을 더 포함하는 것을 특징으로 하는 백라이트 유닛.

청구항 12.

광을 발생하는 광 발생부; 및

상기 광 발생부를 수납하고, 외부 공기를 흡입하는 흡기부 및 내부 공기가 방출되는 배기부가 형성된 수납 용기를 포함하는 백라이트 유닛.

청구항 13.

제 12 항에 있어서, 상기 수납 용기는 바닥판 및 상기 바닥판의 에지부로부터 연장된 복수의 측벽들을 포함하여 상기 광 발생부를 수납하기 위한 수납 공간을 제공하고, 상기 측벽들은 제1 측벽, 상기 제1 측벽과 인접하여 배치된 제2 측벽, 상기 제2 측벽과 인접하여 배치되며 상기 제1 측벽과 대향하는 제3 측벽, 및 상기 제1 및 제3 측벽과 인접하여 배치되며 상기 제2 측벽과 대향하는 제4 측벽을 포함하는 것을 특징으로 하는 백라이트 유닛.

청구항 14.

제 13 항에 있어서, 상기 배기부는 상기 수납 용기의 상기 바닥판 및 상기 제1 내지 제4 측벽들 중 적어도 하나에 형성된 1개 이상의 관통공을 포함하고, 상기 흡기부는 상기 바닥판 및 상기 측벽들 중 적어도 하나에 형성된 1개 이상의 팬을 포함하는 것을 특징으로 하는 백라이트 유닛.

청구항 15.

제 14 항에 있어서, 상기 관통공은 상기 바닥판을 관통하여 형성되고, 상기 팬은 상기 제1 측벽에 형성되는 것을 특징으로 하는 백라이트 유닛.

청구항 16.

제 15 항에 있어서, 상기 제1 측벽은 상기 바닥판에 대해서 외측으로 경사진 것을 특징으로 하는 백라이트 유닛.

SEC et al. v. MRI
SEC Exhibit 1020.0184
IPR2023-00255

청구항 17.

제 13 항에 있어서, 상기 광 발생부를 구동하기 위하여 상기 수납 용기의 바닥판 및 상기 측벽들 중 어느 하나 상에 배치된 제1 구동 회로부를 더 포함하는 것을 특징으로 하는 백라이트 유닛.

청구항 18.

제 12 항에 있어서, 상기 광 발생부는 발광 다이오드 광원을 포함하는 면광원 장치인 것을 특징으로 하는 백라이트 유닛.

청구항 19.

제 18 항에 있어서, 상기 면광원 장치는 상기 수납 용기 및 상기 발광 다이오드 광원 사이에 배치된 반사판을 더 포함하는 것을 특징으로 하는 백라이트 유닛.

청구항 20.

광을 발생하는 광 발생부 및 상기 광 발생부를 수납하고, 외부 공기가 흡입되는 흡기부 및 내부 공기를 방출하는 배기부가 형성된 수납 용기를 포함하는 백라이트 유닛; 및

상기 광 발생부로부터 출사되는 광을 이용하여 영상을 표시하는 액정표시패널을 포함하는 액정표시장치.

청구항 21.

제 20 항에 있어서, 상기 수납 용기는 바닥판 및 복수의 측벽들을 포함하며, 상기 흡기부는 상기 바닥판 및 상기 측벽들 중 적어도 하나를 관통하여 형성된 1개 이상의 관통공을 포함하고, 상기 배기부는 상기 바닥판 및 상기 측벽들 중 적어도 하나에 형성된 1개 이상의 팬을 포함하는 것을 특징으로 하는 액정표시장치.

청구항 22.

제 21 항에 있어서, 상기 관통공은 상기 바닥판을 관통하여 형성되고, 상기 팬은 상기 측벽들 중 상기 바닥판에 대해서 외측으로 경사진 제1 측벽에 형성되는 것을 특징으로 하는 액정표시장치.

청구항 23.

제 22 항에 있어서, 상기 팬은 상기 측벽들에 각각 형성되고, 상기 측벽들은 각각 상기 바닥판에 대해서 외측으로 경사진 것을 특징으로 하는 액정표시장치.

청구항 24.

제 20 항에 있어서, 상기 광 발생부는 발광 다이오드 광원을 포함하는 면광원 장치인 것을 특징으로 하는 액정표시장치.

청구항 25.

SEC et al. v. MRI
SEC Exhibit 1020.0185
IPR2023-00255

제 20 항에 있어서, 상기 광 발생부를 구동하기 위하여 상기 바닥판 및 상기 측벽들 중 어느 하나에 배치된 제1 구동 회로부 및 상기 액정표시패널을 구동하기 위하여 상기 바닥판 및 상기 측벽들 중 어느 하나에 배치된 제2 구동 회로부를 더 포함하는 것을 특징으로 하는 액정표시장치.

청구항 26.

제 25 항에 있어서, 상기 제1 구동 회로부는 상기 수납 용기의 바닥판에 배치되고, 상기 제2 구동 회로부는 상기 측벽들 중 상기 바닥판에 대해서 외측으로 경사진 제1 측벽에 배치된 것을 특징으로 하는 액정표시장치.

청구항 27.

광을 발생하는 광 발생부 및 상기 광 발생부를 수납하고, 외부 공기를 흡입하는 흡기부 및 내부 공기가 방출되는 배기부가 형성된 수납 용기를 포함하는 백라이트 유닛; 및

상기 광 발생부로부터 출사되는 광을 이용하여 영상을 표시하는 액정표시패널을 포함하는 액정표시장치.

청구항 28.

제 27 항에 있어서, 상기 수납 용기는 바닥판 및 복수의 측벽들을 포함하며, 상기 배기부는 상기 바닥판 및 상기 측벽들 중 적어도 하나를 관통하여 형성된 1개 이상의 관통공을 포함하고, 상기 흡기부는 상기 바닥판 및 상기 측벽들 중 적어도 하나에 형성된 1개 이상의 팬을 포함하는 것을 특징으로 하는 액정표시장치.

도면

SEC et al. v. MRI
SEC Exhibit 1020.0186
IPR2023-00255

도면1

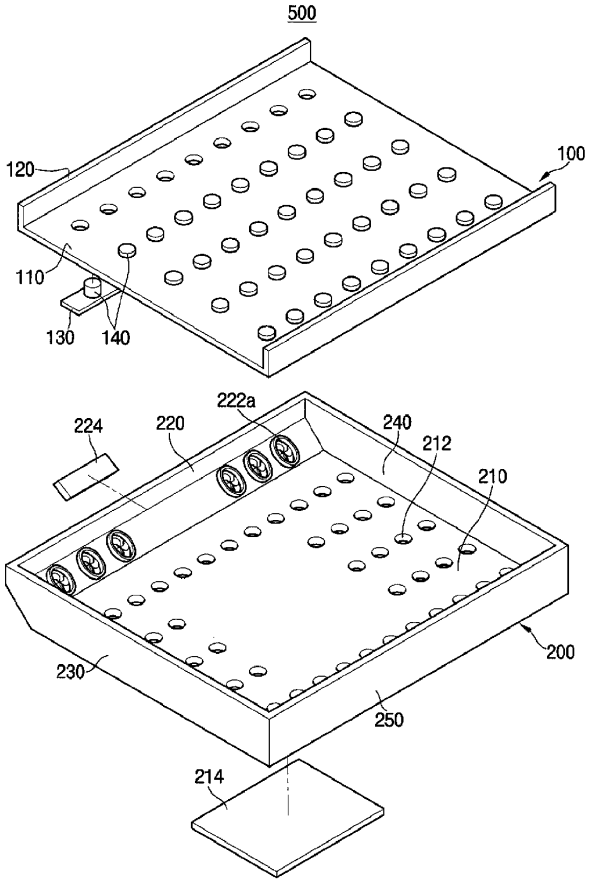

SEC et al. v. MRI
SEC Exhibit 1020.0187
IPR2023-00255

도면2

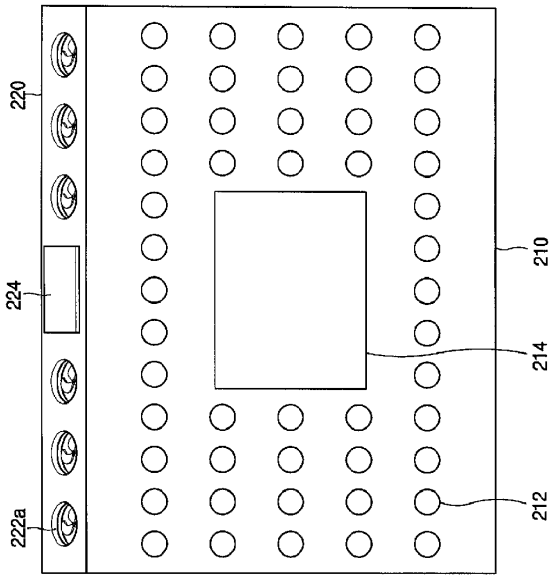

도면3

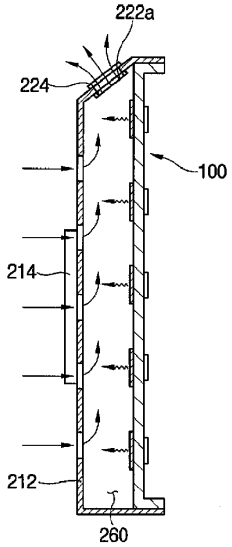

SEC et al. v. MRI
SEC Exhibit 1020.0188
IPR2023-00255

도면4

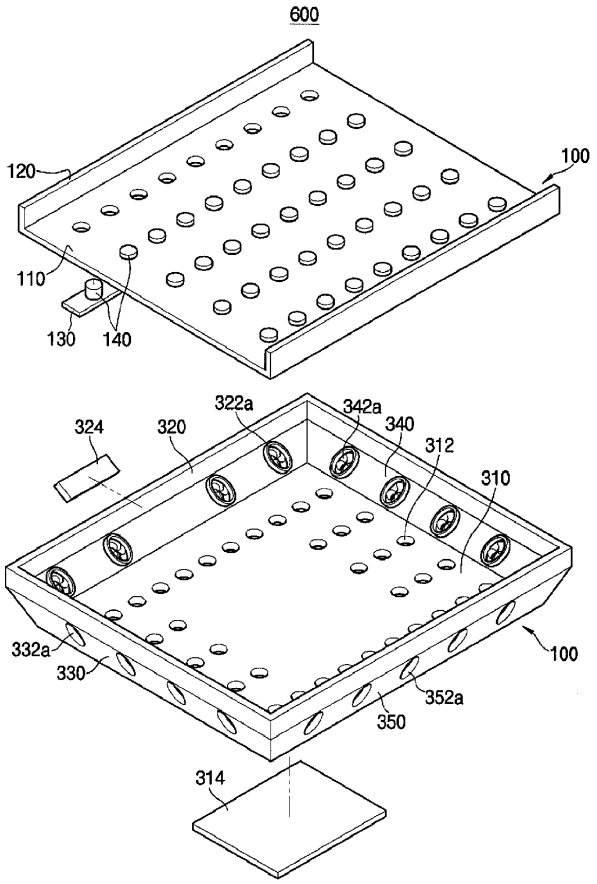

SEC et al. v. MRI
SEC Exhibit 1020.0189
IPR2023-00255

도면5

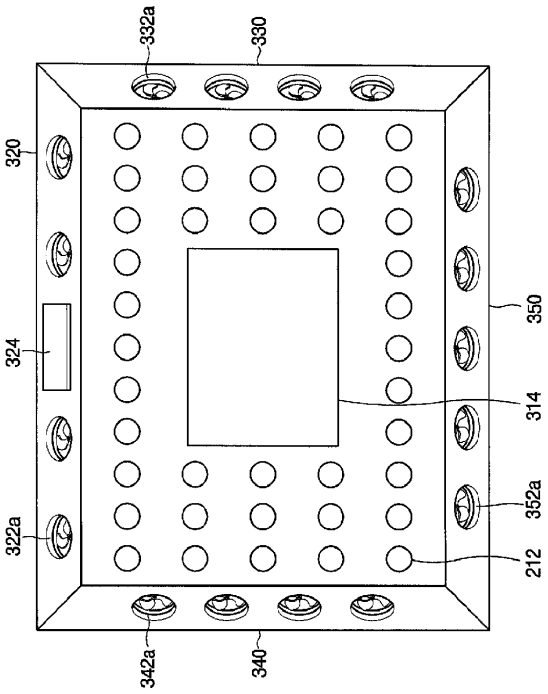

도면6

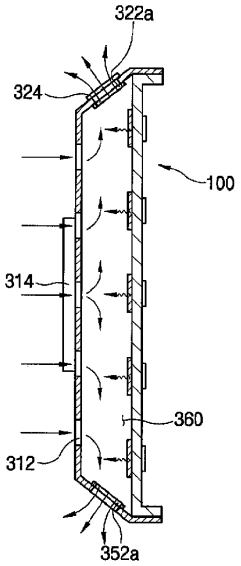

SEC et al. v. MRI
SEC Exhibit 1020.0190
IPR2023-00255

도면7

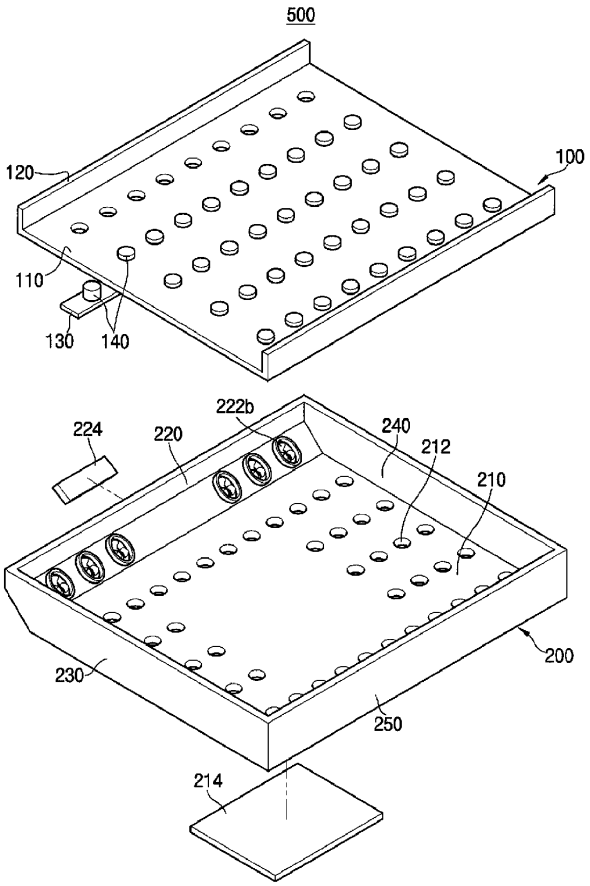

SEC et al. v. MRI
SEC Exhibit 1020.0191
IPR2023-00255

도면8

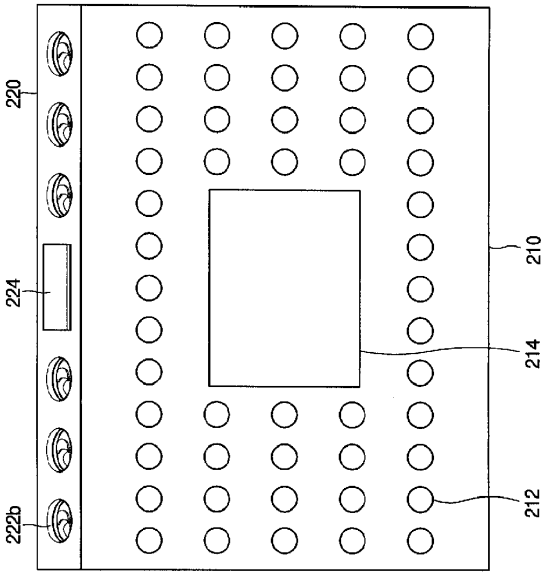

도면9

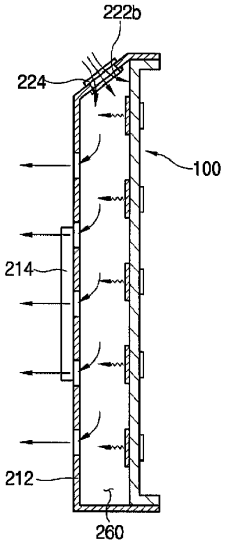

SEC et al. v. MRI
SEC Exhibit 1020.0192
IPR2023-00255

도면10

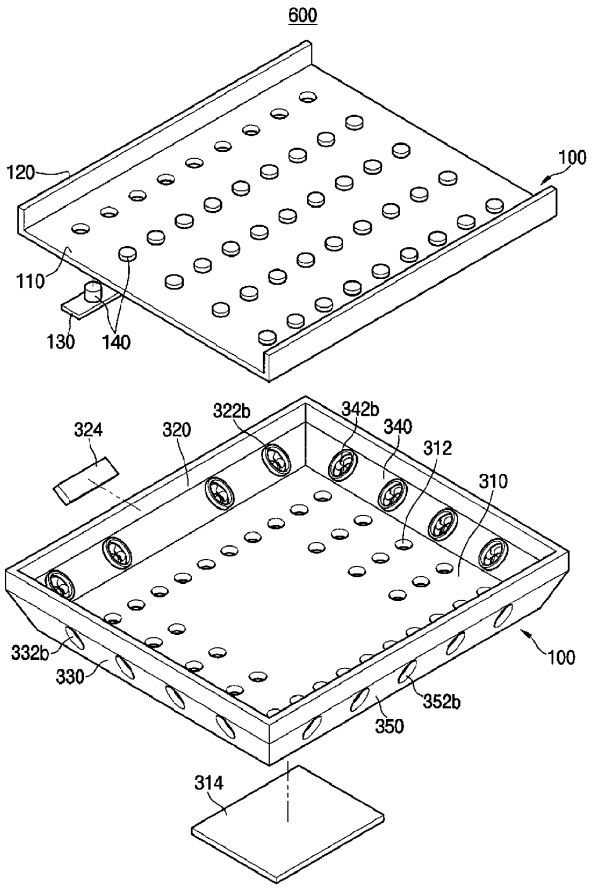
600
120
100
110
130
140
324
320
322b
342b
340
312
310
332b
330
100
352b
350
314

도면11

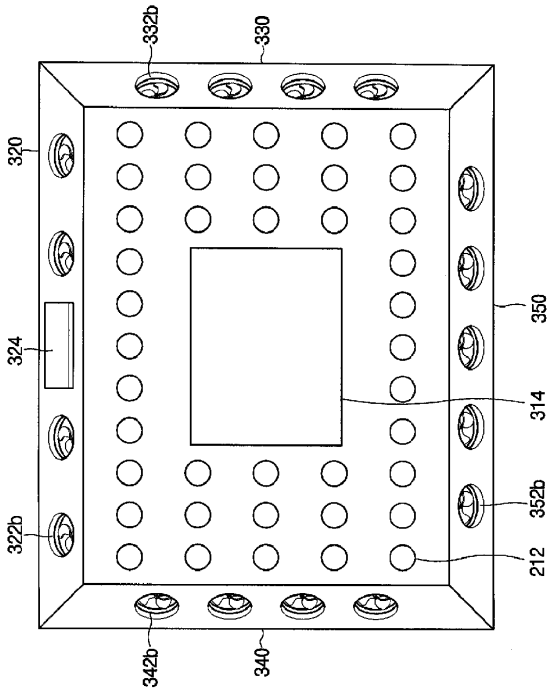

도면12

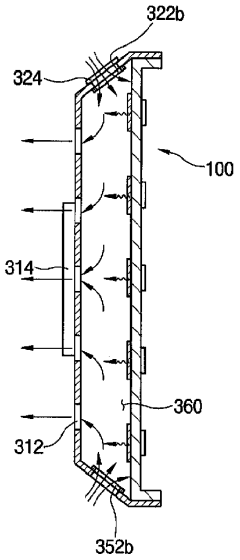

SEC et al. v. MRI
SEC Exhibit 1020.0194
IPR2023-00255

도면13

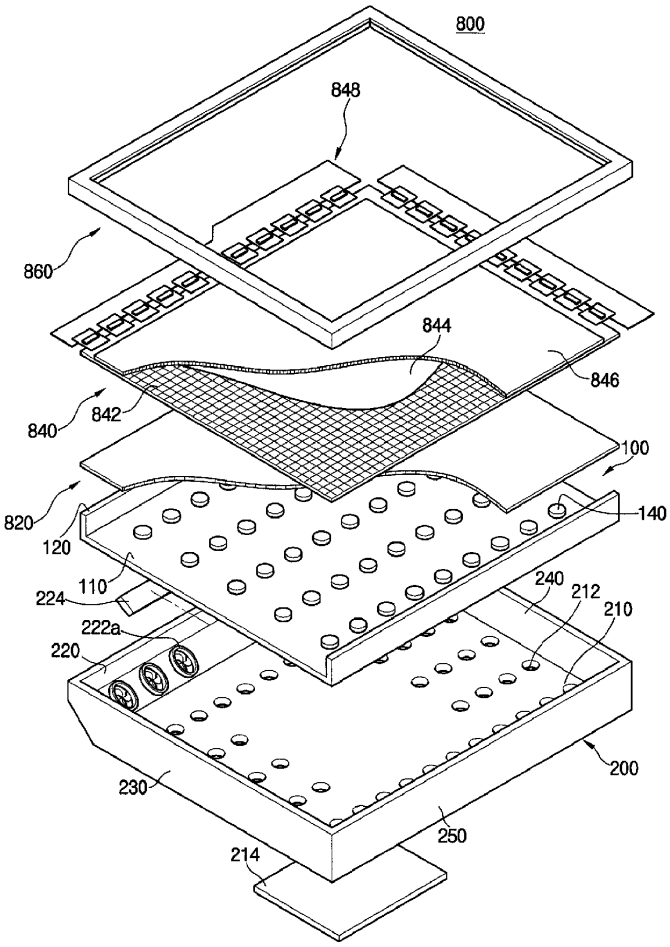

SEC et al. v. MRI
SEC Exhibit 1020.0195
IPR2023-00255

도면14

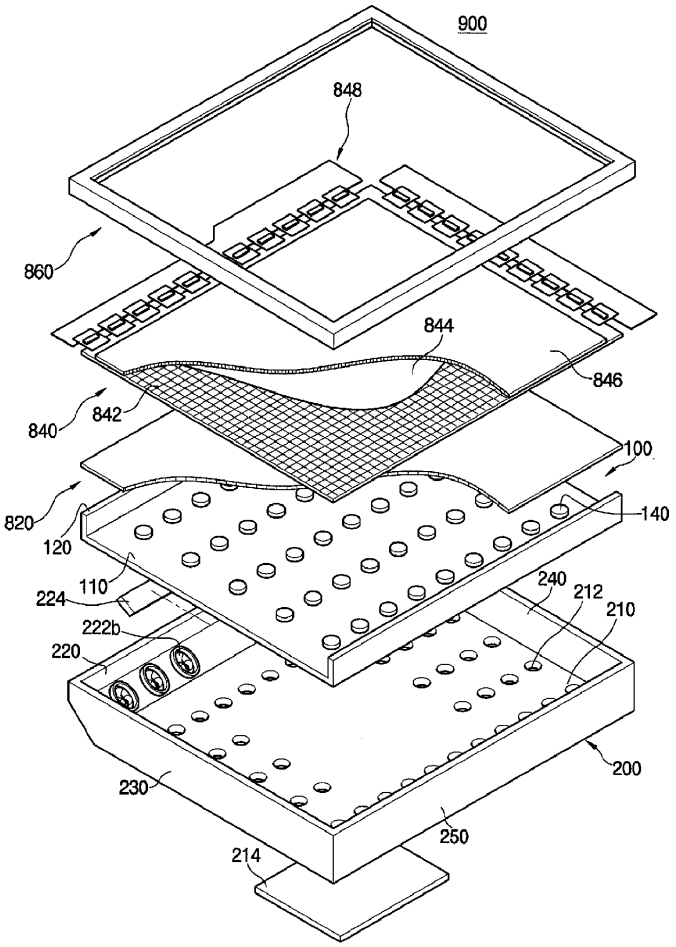

SEC et al. v. MRI
SEC Exhibit 1020.0196
IPR2023-00255

(19) KOREAN INTELLECTUAL PROPERTY OFFICE

KOREAN PATENT ABSTRACTS

(11) Publication number: 1020070070675 A

(43) Date of publication of application: 04.07.2007

(21) Application number: 1020050133483

(22) Date of filing: 29.12.2005

(51) Int. Cl: *G02F 1/13 (2006.01);*

(71) Applicant: NAUTILUS HYOSUNG INC.

(72) Inventor: CHOI, CHANG WOO
LEE, CHEUL YONG

(54) **LCD COOLING MODULE AND AN AUTOMATIC TELLER MACHINE USING THE SAME, PARTICULARLY FOR PREVENTING DETERIORATION OF AN LCD**

(57) Abstract:

PURPOSE: An LCD cooling module, and an automatic teller machine using the same are provided to minimize a failure of an LCD by preventing deterioration of the LCD by cooling the LCD, thereby improving the management efficiency of the automatic teller machine.

CONSTITUTION: An LCD(10) displays image information. An LCD housing(30) is formed in a box shape with an open front for forming a containing space inside, wherein the LCD is embedded in the containing space with a front of the LCD exposed. An intake fan is installed at the LCD housing for cooling the LCD. The intake fan inhales air at a rear of the LCD housing and sends air to the containing space of the LCD housing.

© KIPO 2007

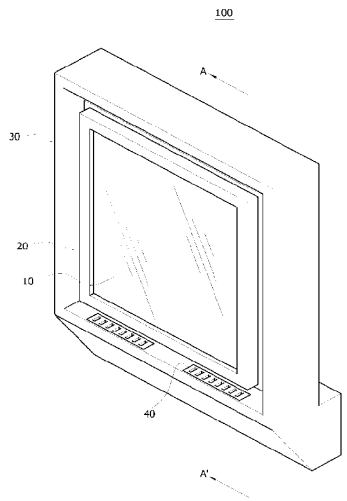

This Facsimile First Page has been artificially created from the Korean Patent Abstracts CD Rom

UNITED STATES PATENT AND TRADEMARK OFFICE

UNITED STATES DEPARTMENT OF COMMERCE
United States Patent and Trademark Office
Address: COMMISSIONER FOR PATENTS
P.O. Box 1450
Alexandria, Virginia 22313-1450
www.uspto.gov

APPLICATION NUMBER	FILING OR 371(C) DATE	FIRST NAMED APPLICANT	ATTY. DOCKET NO./TITLE
14/508,767	10/07/2014	William DUNN	MAN2241-010J

CONFIRMATION NO. 5280

8698
STANDLEY LAW GROUP LLP
6300 Riverside Drive
Dublin, OH 43017

PUBLICATION NOTICE

OC000000072971678

Title: System for Using Constricted Convection with Closed Loop Cooling System As the Convection Plate

Publication No.US-2015-0022967-A1
Publication Date:01/22/2015

NOTICE OF PUBLICATION OF APPLICATION

The above-identified application will be electronically published as a patent application publication pursuant to 37 CFR 1.211, et seq. The patent application publication number and publication date are set forth above.

The publication may be accessed through the USPTO's publically available Searchable Databases via the Internet at www.uspto.gov. The direct link to access the publication is currently http://www.uspto.gov/patft/.

The publication process established by the Office does not provide for mailing a copy of the publication to applicant. A copy of the publication may be obtained from the Office upon payment of the appropriate fee set forth in 37 CFR 1.19(a)(1). Orders for copies of patent application publications are handled by the USPTO's Office of Public Records. The Office of Public Records can be reached by telephone at (703) 308-9726 or (800) 972-6382, by facsimile at (703) 305-8759, by mail addressed to the United States Patent and Trademark Office, Office of Public Records, Alexandria, VA 22313-1450 or via the Internet.

In addition, information on the status of the application, including the mailing date of Office actions and the dates of receipt of correspondence filed in the Office, may also be accessed via the Internet through the Patent Electronic Business Center at www.uspto.gov using the public side of the Patent Application Information and Retrieval (PAIR) system. The direct link to access this status information is currently http://pair.uspto.gov/. Prior to publication, such status information is confidential and may only be obtained by applicant using the private side of PAIR.

Further assistance in electronically accessing the publication, or about PAIR, is available by calling the Patent Electronic Business Center at 1-866-217-9197.

Office of Data Managment, Application Assistance Unit (571) 272-4000, or (571) 272-4200, or 1-888-786-0101

SEC et al. v. MRI
SEC Exhibit 1020.0198
IPR2023-00255

UNITED STATES PATENT AND TRADEMARK OFFICE

UNITED STATES DEPARTMENT OF COMMERCE
United States Patent and Trademark Office
Address: COMMISSIONER FOR PATENTS
P.O. Box 1450
Alexandria, Virginia 22313-1450
www.uspto.gov

APPLICATION NO.	FILING DATE	FIRST NAMED INVENTOR	ATTORNEY DOCKET NO.	CONFIRMATION NO.
14/508,767	10/07/2014	William DUNN	MAN2241-010J	5280

8698 7590 01/30/2015
STANDLEY LAW GROUP LLP
6300 Riverside Drive
Dublin, OH 43017

EXAMINER
KIM, RICHARD H

ART UNIT	PAPER NUMBER
2871	

NOTIFICATION DATE	DELIVERY MODE
01/30/2015	ELECTRONIC

Please find below and/or attached an Office communication concerning this application or proceeding.

The time period for reply, if any, is set in the attached communication.

Notice of the Office communication was sent electronically on above-indicated "Notification Date" to the following e-mail address(es):

standleydocketing@standleyllp.com

PTOL-90A (Rev. 04/07)

Office Action Summary	Application No. 14/508,767	Applicant(s) DUNN, WILLIAM	
	Examiner RICHARD KIM	Art Unit 2871	AIA (First Inventor to File) Status No

-- The MAILING DATE of this communication appears on the cover sheet with the correspondence address --

Period for Reply

A SHORTENED STATUTORY PERIOD FOR REPLY IS SET TO EXPIRE 3 MONTHS FROM THE MAILING DATE OF THIS COMMUNICATION.

- Extensions of time may be available under the provisions of 37 CFR 1.136(a). In no event, however, may a reply be timely filed after SIX (6) MONTHS from the mailing date of this communication.
- If NO period for reply is specified above, the maximum statutory period will apply and will expire SIX (6) MONTHS from the mailing date of this communication.
- Failure to reply within the set or extended period for reply will, by statute, cause the application to become ABANDONED (35 U.S.C. § 133). Any reply received by the Office later than three months after the mailing date of this communication, even if timely filed, may reduce any earned patent term adjustment. See 37 CFR 1.704(b).

Status

1)☒ Responsive to communication(s) filed on *10/7/14*.

☐ A declaration(s)/affidavit(s) under **37 CFR 1.130(b)** was/were filed on _____.

2a)☐ This action is **FINAL**. 2b)☒ This action is non-final.

3)☐ An election was made by the applicant in response to a restriction requirement set forth during the interview on _____; the restriction requirement and election have been incorporated into this action.

4)☐ Since this application is in condition for allowance except for formal matters, prosecution as to the merits is closed in accordance with the practice under *Ex parte Quayle*, 1935 C.D. 11, 453 O.G. 213.

Disposition of Claims*

5)☒ Claim(s) *1-19* is/are pending in the application.

5a) Of the above claim(s) _____ is/are withdrawn from consideration.

6)☒ Claim(s) *12-16* is/are allowed.

7)☒ Claim(s) *1-8,10,11 and 17-19* is/are rejected.

8)☒ Claim(s) *9* is/are objected to.

9)☐ Claim(s) _____ are subject to restriction and/or election requirement.

* If any claims have been determined allowable, you may be eligible to benefit from the **Patent Prosecution Highway** program at a participating intellectual property office for the corresponding application. For more information, please see http://www.uspto.gov/patents/init_events/pph/index.jsp or send an inquiry to PPHfeedback@uspto.gov.

Application Papers

10)☐ The specification is objected to by the Examiner.

11)☒ The drawing(s) filed on *10/7/14* is/are: a)☒ accepted or b)☐ objected to by the Examiner.

Applicant may not request that any objection to the drawing(s) be held in abeyance. See 37 CFR 1.85(a).

Replacement drawing sheet(s) including the correction is required if the drawing(s) is objected to. See 37 CFR 1.121(d).

Priority under 35 U.S.C. § 119

12)☐ Acknowledgment is made of a claim for foreign priority under 35 U.S.C. § 119(a)-(d) or (f).

Certified copies:

a)☐ All b)☐ Some** c)☐ None of the:

1.☐ Certified copies of the priority documents have been received.

2.☐ Certified copies of the priority documents have been received in Application No. _____.

3.☐ Copies of the certified copies of the priority documents have been received in this National Stage application from the International Bureau (PCT Rule 17.2(a)).

** See the attached detailed Office action for a list of the certified copies not received.

Attachment(s)

1) ☐ Notice of References Cited (PTO-892)

2) ☒ Information Disclosure Statement(s) (PTO/SB/08a and/or PTO/SB/08b) Paper No(s)/Mail Date *1/2/15*.

3) ☐ Interview Summary (PTO-413) Paper No(s)/Mail Date. _____ .

4) ☐ Other: _____.

SEC et al. v. MRI
SEC Exhibit 1020.0200
IPR2023-00255

DETAILED ACTION

1. The present application is being examined under the pre-AIA first to invent provisions.

Claim Rejections - 35 USC § 102

2. The following is a quotation of the appropriate paragraphs of pre-AIA 35 U.S.C. 102 that form the basis for the rejections under this section made in this Office action:

> A person shall be entitled to a patent unless –
>
> (b) the invention was patented or described in a printed publication in this or a foreign country or in public use or on sale in this country, more than one year prior to the date of application for patent in the United States.

3. Claims 1-3, 5-7, 10 and 11 rejected under pre-AIA 35 U.S.C. 102(b) as being anticipated by Heady et al. (US 5,991,153).

4. Re claim 1, Heady et al. discloses a device comprising a closed loop of circulating gas positioned to surround the electronic display (110, 120, 130, 230, 232, 220); and an open loop of cooling air traveling along the rear surface of the electronic display without mixing with the circulating gas. The air, illustrated by the arrows along the external fins (210) comprises an open loop of cooling air.

5. Re claim 2, Heady et al. discloses the device comprising a means for transferring heat (105, 215) from the circulating gas to the cooling air.

6. Re claim 3, Heady et al. discloses the device comprising a transparent anterior plate (207) positioned in front of the display surface to define a gap; a fan (140) positioned to force the circulating gas through the gap.

7. Re claim 5, Heady et al. discloses the device comprising a metallic layer (215) bonded to the rear surface of the electronic display.

8. Re claim 6, Heady et al. discloses the device comprising a fan (150) positioned to force cooling air along the rear surface (220) of the electronic display.

9. Re claim 7, Heady et al. discloses the device comprising a temperature sensing device within the closed loop of circulating gas; a fan positioned to force circulating gas through the closed loop; and a switch in communication with the temperature sensing device and the fan; and wherein the fan is switched on when the temperature within the closed loop of circulating gas reaches a threshold value (col. 9, lines 53-67; col. 10, lines 1-5).

10. Re claim 10, Heady et al. discloses the device wherein the means for transferring heat from the circulating gas to the cooling air comprises placing the circulating gas within a plenum (enclosure defined by members 205, 105, 207) and allowing cooling air to contact exterior surface of the plenum.

11. Re claim 11, Heady et al. discloses the device wherein the rear surface of the electronic display is the rear surface (220) of an LED backlight.

Claim Rejections - 35 USC § 103

12. The following is a quotation of pre-AIA 35 U.S.C. 103(a) which forms the basis for all obviousness rejections set forth in this Office action:

> (a) A patent may not be obtained though the invention is not identically disclosed or described as set forth in section 102 of this title, if the differences between the subject matter sought to be patented and the prior art are such that the subject matter as a whole would have been obvious at the time the invention was made to a person having ordinary skill in the art to which said subject matter pertains. Patentability shall not be negatived by the manner in which the invention was made.

13. Claims 4, 6, 8 and 17-19 rejected under pre-AIA 35 U.S.C. 103(a) as being unpatentable over Heady et al.

14. Re claim 4, Heady et al. does not disclose the device comprising a second transparent anterior pate bonded to the first transparent anterior plate.

15. It would have been obvious to one having ordinary skill in the art at the time the invention was made to employ the device comprising a second transparent anterior pate bonded to the first transparent anterior plate. Employing a second layer bonded to a first layer in order to improve durability is well known in the art.

16. Re claim 6, Heady et al. does not disclose the device comprising a fan positioned to force cooling air along the rear surface (220) of the electronic display.

17. It would have been obvious to one having ordinary skill in the art at the time the invention was made to employ the device comprising a fan positioned to force cooling air along the rear surface of the electronic display. Heady et al. discloses that air may be blown through the external fins 210 (col. 6, lines 66-67). Fans are well known in the art as a device to blow air in a particular direction.

18. Re claim 8, Heady et al. does not explicitly disclose the device wherein the flow of open loop cooling air is perpendicular to the flow of circulating gas in the closed loop.

19. It would have been obvious to one having ordinary skill in the art at the time the invention was made to employ the device wherein the flow of open loop cooling air is perpendicular to the flow of circulating gas in the closed loop. Heady et al. discloses that air is blown through the external fins (210). Therefore, the direction of the blown air is dependent on the orientation of the external fins. Therefore, positioning the external fins such that air is blown perpendicularly to the closed loop would be a functional equivalent modification since both arrangements would equally transfer heat from the external fins. Additionally, Heady et al.

discloses that blown air through the external fins is optional (col. 6, line 67). Therefore, in a natural environment, air commonly circulates in different directions depending on various environmental factors. Obtaining the device of Heady et al. such that the flow of open loop cooling air is perpendicular to the flow of circulating gas in the closed loop would have been obvious at the time of the invention due to the various directions of air flow in a natural environment.

20. Re claim 17 Heady et al. discloses a device comprising a liquid crystal stack (display 110 would have more than one layer, therefore comprising a stack) having a display surface; a backlight (220, 232, 235, 237, 230) with a thermally conductive rear surface (220) positioned posterior to the liquid crystal stack; a transparent plate (207) placed in front of the display surface, the space between the transparent plate and the display surface defining a channel; a closed loop of circulating gas positioned to surround the liquid crystal stack and backlight where circulating gas flows through the channel (Figs. 2 and 3); and an open loop of cooling air traveling along the rear surface of the backlight where the cooling air is not permitted to mix with the circulating gas. The air, illustrated by the arrows along the external fins (210) comprises an open loop of cooling air. Although the cooling air is separated from the rear surface, it travels "along" the rear surface of the backlight.

21. Heady et al. does not disclose the device wherein the backlight comprises LED's, and the transparent plate is glass.

22. It would have been obvious to one having ordinary skill in the art at the time the invention was made to employ the device wherein the backlight comprises LED's since doing so is well known in the art for reduced power consumption and improved brightness. Furthermore,

employing glass as the transparent plate is well known in the art due to its well-known transparent properties.

23. Re claim 18, Heady et al. does not explicitly disclose the device wherein the flow of open loop cooling air is perpendicular to the flow of circulating gas in the closed loop.

24. It would have been obvious to one having ordinary skill in the art at the time the invention was made to employ the device wherein the flow of open loop cooling air is perpendicular to the flow of circulating gas in the closed loop. Heady et al. discloses that air is blown through the external fins (210). Therefore, the direction of the blown air is dependent on the orientation of the external fins. Therefore, positioning the external fins such that air is blown perpendicularly to the closed loop would be a functional equivalent modification since both arrangements would equally transfer heat from the external fins. Additionally, Heady et al. discloses that blown air through the external fins is optional (col. 6, line 67). Therefore, in a natural environment, air commonly circulates in different directions depending on various environmental factors. Obtaining the device of Heady et al. such that the flow of open loop cooling air is perpendicular to the flow of circulating gas in the closed loop would have been obvious at the time of the invention due to the various directions of air flow in a natural environment.

25. Re claim 19, Heady et al. discloses a plenum (enclosure defined by members 205, 105, 207) having interior and exterior surfaces where the circulating air contacts the interior surfaces and the cooling air contacts the exterior surfaces.

Allowable Subject Matter

26. Claims 12-16 allowed.

27. Claim 9 objected to as being dependent upon a rejected base claim, but would be allowable if rewritten in independent form including all of the limitations of the base claim and any intervening claims.

Conclusion

Any inquiry concerning this communication or earlier communications from the examiner should be directed to RICHARD KIM whose telephone number is (571)272-2294. The examiner can normally be reached on 9:00-6:30 M-F.

If attempts to reach the examiner by telephone are unsuccessful, the examiner's supervisor, Bumsuk Won can be reached on (571)272-2713. The fax phone number for the organization where this application or proceeding is assigned is 571-273-8300.

Information regarding the status of an application may be obtained from the Patent Application Information Retrieval (PAIR) system. Status information for published applications may be obtained from either Private PAIR or Public PAIR. Status information for unpublished applications is available through Private PAIR only. For more information about the PAIR system, see http://pair-direct.uspto.gov. Should you have questions on access to the Private PAIR system, contact the Electronic Business Center (EBC) at 866-217-9197 (toll-free). If you would like assistance from a USPTO Customer Service Representative or access to the automated information system, call 800-786-9199 (IN USA OR CANADA) or 571-272-1000.

/RICHARD KIM/
Primary Examiner, Art Unit 2871

Under the Paperwork Reduction Act of 1995, no persons are required to respond to a collection of information unless it contains a valid OMB control number.

INFORMATION DISCLOSURE STATEMENT BY APPLICANT (**Not for submission under 37 CFR 1.99)**		
	Application Number	14508767
	Filing Date	2014-10-07
	First Named Inventor	Dunn, William
	Art Unit	2871
	Examiner Name	KIM, RICHARD H
	Attorney Docket Number	MAN2241-010J

U.S.PATENTS						Remove
Examiner Initial*	Cite No	Patent Number	Kind Code[1]	Issue Date	Name of Patentee or Applicant of cited Document	Pages,Columns,Lines where Relevant Passages or Relevant Figures Appear
	1	4093355		1978-06-06	Kaplit et al	
	2	4593978		1986-06-10	Mourey et al	
	3	4634225		1987-01-06	Haim et al	
	4	5029982		1991-07-09	Nash	
	5	5088806		1992-02-18	McCartney et al	
	6	5247374		1993-09-21	Tereda	
	7	5559614		1996-09-24	Urbish et al	
	8	5767489		1998-06-16	Ferrier	

ALL REFERENCES CONSIDERED EXCEPT WHERE LINED THROUGH. /R.K./

SEC et al. v. MRI
SEC Exhibit 1020.0208
IPR2023-00255

Receipt date: 01/02/2015	Application Number	14508767	14508767 - GAU: 2871
INFORMATION DISCLOSURE STATEMENT BY APPLICANT (**Not for submission under 37 CFR 1.99)**	Filing Date	2014-10-07	
	First Named Inventor	Dunn, William	
	Art Unit	2871	
	Examiner Name	KIM, RICHARD H	
	Attorney Docket Number	MAN2241-010J	

	9	5748269		1998-05-05	Harris et al	
	10	5818010		1998-10-06	McCann	
	11	6089751		2000-07-18	Conover et al	
	12	6157432		2000-12-05	Helbing	
	13	6191839		2001-02-20	Briley	
	14	6417900		2002-07-09	Shin et al	
	15	6535266		2003-03-18	Nemeth et al	
	16	6628355		2003-09-30	Takahara	
	17	6839104		2005-01-04	Taniguchi et al	
	18	6885412		2005-04-16	Ohnishi et al	
	19	6943768		2005-09-13	Cavanaugh et al	

ALL REFERENCES CONSIDERED EXCEPT WHERE LINED THROUGH. /R.K./

SEC et al. v. MRI
SEC Exhibit 1020.0209
IPR2023-00255

Receipt date: 01/02/2015	Application Number	14508767	14508767 - GAU: 2871
INFORMATION DISCLOSURE STATEMENT BY APPLICANT (**Not for submission under 37 CFR 1.99)**	Filing Date	2014-10-07	
	First Named Inventor	Dunn, William	
	Art Unit	2871	
	Examiner Name	KIM, RICHARD H	
	Attorney Docket Number	MAN2241-010J	

	20	5991153		1999-11-23	Heady , et al.	
	21	6392727		2002-05-21	Larson , et al.	
	22	6961108		2005-11-01	Wang , et al.	
	23	6909486		2005-06-21	Wang , et al.	
	24	7083285		2006-08-01	Hsu	
	25	5869919		1999-02-09	SATO	
	26	7059757		2006-06-13	Shimizu	
	27	7602469		2009-10-13	Shin	
	28	8269916		2012-09-18	Ohkawa	
	29	6493440		2002-12-10	Gromatzky	
	30	7667964		2010-02-23	Kang	

ALL REFERENCES CONSIDERED EXCEPT WHERE LINED THROUGH. /R.K./

SEC et al. v. MRI
SEC Exhibit 1020.0210
IPR2023-00255

Receipt date: 01/02/2015	Application Number	14508767	14508767 - GAU: 2871
INFORMATION DISCLOSURE STATEMENT BY APPLICANT (**Not for submission under 37 CFR 1.99)**	Filing Date	2014-10-07	
	First Named Inventor	Dunn, William	
	Art Unit	2871	
	Examiner Name	KIM, RICHARD H	
	Attorney Docket Number	MAN2241-010J	

If you wish to add additional U.S. Patent citation information please click the Add button. Add

U.S.PATENT APPLICATION PUBLICATIONS Remove

Examiner Initial*	Cite No	Publication Number	Kind Code[1]	Publication Date	Name of Patentee or Applicant of cited Document	Pages,Columns,Lines where Relevant Passages or Relevant Figures Appear
	1	20020101553		2002-08-01	Enomoto et al	
	2	20020126248		2002-09-12	Yoshida	
	3	20030007109		2003-01-09	Park	
	4	20040036834		2004-02-26	Ohnishi et al	
	5	20040165139		2004-08-26	Anderson et al	
	6	20060132699		2006-06-22	Joo-Waon Cho et al	
	7	20060209266		2006-09-21	Motoyasu Utsunomiya	
	8	20070151664		2007-07-05	Jae Ho Shin	
	9	20060132699		2006-06-22	Cho	

EFS Web 2.1.17 ALL REFERENCES CONSIDERED EXCEPT WHERE LINED THROUGH. /R.K./

Receipt date: 01/02/2015	Application Number	14508767 14508767 - GAU: 2871
INFORMATION DISCLOSURE STATEMENT BY APPLICANT (**Not for submission under 37 CFR 1.99)**	Filing Date	2014-10-07
	First Named Inventor	Dunn, William
	Art Unit	2871
	Examiner Name	KIM, RICHARD H
	Attorney Docket Number	MAN2241-010J

	10	20070065091		2007-03-22	Hinata	
	11	20100171889		2010-07-08	Pantel	

If you wish to add additional U.S. Published Application citation information please click the Add button. Add

FOREIGN PATENT DOCUMENTS Remove

Examiner Initial*	Cite No	Foreign Document Number[3]	Country Code[2] ¡	Kind Code[4]	Publication Date	Name of Patentee or Applicant of cited Document	Pages,Columns,Lines where Relevant Passages or Relevant Figures Appear	T[5]
	1	JP03153212	JP		1991-07-01	Hitachi Ltd.		☐
	2	JP08194437	JP		1996-07-30	Matsushita Electric Works Ltd		☐
	3	JP11160727	JP		1999-06-18	Advanced Display KK		☐
	4	JP2002158475	JP		2002-05-31	Fujitsu General Ltd		☐
	5	JP2005134849	JP		2005-05-26	Nagoya Electric Works		☐
	6	KR1020070070675	KR		2007-07-04	Nautilus Hyosung Inc.		☐
	7	GB2402205	GB		2004-01-12	Densitron Technologies PLC		☐

ALL REFERENCES CONSIDERED EXCEPT WHERE LINED THROUGH. /R.K./

SEC et al. v. MRI
SEC Exhibit 1020.0212
IPR2023-00255

Receipt date: 01/02/2015	Application Number	14508767	14508767 - GAU: 2871
INFORMATION DISCLOSURE STATEMENT BY APPLICANT (**Not for submission under 37 CFR 1.99)**	Filing Date	2014-10-07	
	First Named Inventor	Dunn, William	
	Art Unit	2871	
	Examiner Name	KIM, RICHARD H	
	Attorney Docket Number	MAN2241-010J	

	8	WO2005079129	WO		2005-08-25	Inssimainos Oy		☐
	9	JP2008292743	JP		2008-12-04	NES DISPLAY SOLUTIONS LTD.		☐
	10	KR100666961	KR		2007-01-10	PHICOM CORP.		☐
	11	KR20060016469	KR		2006-02-22	SAMSUNG ELECTRONICS CO., LTD		☐

If you wish to add additional Foreign Patent Document citation information please click the Add button Add

NON-PATENT LITERATURE DOCUMENTS Remove

Examiner Initials*	Cite No	Include name of the author (in CAPITAL LETTERS), title of the article (when appropriate), title of the item (book, magazine, journal, serial, symposium, catalog, etc), date, pages(s), volume-issue number(s), publisher, city and/or country where published.	T[5]
	1	ZEEF, HUBING, EMC analysis of 18' LCD Monitor, August 2000, 1 page	☐

If you wish to add additional non-patent literature document citation information please click the Add button Add

EXAMINER SIGNATURE

Examiner Signature	/Richard Kim/	Date Considered	01/22/2015

*EXAMINER: Initial if reference considered, whether or not citation is in conformance with MPEP 609. Draw line through a citation if not in conformance and not considered. Include copy of this form with next communication to applicant.

[1] See Kind Codes of USPTO Patent Documents at www.USPTO.GOV or MPEP 901.04. [2] Enter office that issued the document, by the two-letter code (WIPO Standard ST.3). [3] For Japanese patent documents, the indication of the year of the reign of the Emperor must precede the serial number of the patent document. [4] Kind of document by the appropriate symbols as indicated on the document under WIPO Standard ST.16 if possible. [5] Applicant is to place a check mark here if English language translation is attached.

ALL REFERENCES CONSIDERED EXCEPT WHERE LINED THROUGH. /R.K./

SEC et al. v. MRI
SEC Exhibit 1020.0213
IPR2023-00255

Receipt date: 01/02/2015	Application Number	14508767	14508767 - GAU: 2871
INFORMATION DISCLOSURE STATEMENT BY APPLICANT (**Not for submission under 37 CFR 1.99)**	Filing Date	2014-10-07	
	First Named Inventor	Dunn, William	
	Art Unit	2871	
	Examiner Name	KIM, RICHARD H	
	Attorney Docket Number	MAN2241-010J	

CERTIFICATION STATEMENT

Please see 37 CFR 1.97 and 1.98 to make the appropriate selection(s):

☐ That each item of information contained in the information disclosure statement was first cited in any communication from a foreign patent office in a counterpart foreign application not more than three months prior to the filing of the information disclosure statement. See 37 CFR 1.97(e)(1).

OR

☐ That no item of information contained in the information disclosure statement was cited in a communication from a foreign patent office in a counterpart foreign application, and, to the knowledge of the person signing the certification after making reasonable inquiry, no item of information contained in the information disclosure statement was known to any individual designated in 37 CFR 1.56(c) more than three months prior to the filing of the information disclosure statement. See 37 CFR 1.97(e)(2).

☐ See attached certification statement.

☐ The fee set forth in 37 CFR 1.17 (p) has been submitted herewith.

☒ A certification statement is not submitted herewith.

SIGNATURE

A signature of the applicant or representative is required in accordance with CFR 1.33, 10.18. Please see CFR 1.4(d) for the form of the signature.

Signature	/Tyler Dunham/	Date (YYYY-MM-DD)	2015-01-02
Name/Print	Tyler Dunham	Registration Number	60364

This collection of information is required by 37 CFR 1.97 and 1.98. The information is required to obtain or retain a benefit by the public which is to file (and by the USPTO to process) an application. Confidentiality is governed by 35 U.S.C. 122 and 37 CFR 1.14. This collection is estimated to take 1 hour to complete, including gathering, preparing and submitting the completed application form to the USPTO. Time will vary depending upon the individual case. Any comments on the amount of time you require to complete this form and/or suggestions for reducing this burden, should be sent to the Chief Information Officer, U.S. Patent and Trademark Office, U.S. Department of Commerce, P.O. Box 1450, Alexandria, VA 22313-1450. DO NOT SEND FEES OR COMPLETED FORMS TO THIS ADDRESS. **SEND TO: Commissioner for Patents, P.O. Box 1450, Alexandria, VA 22313-1450.**

ALL REFERENCES CONSIDERED EXCEPT WHERE LINED THROUGH. /R.K./

SEC et al. v. MRI
SEC Exhibit 1020.0214
IPR2023-00255

Privacy Act Statement

The Privacy Act of 1974 (P.L. 93-579) requires that you be given certain information in connection with your submission of the attached form related to a patent application or patent. Accordingly, pursuant to the requirements of the Act, please be advised that: (1) the general authority for the collection of this information is 35 U.S.C. 2(b)(2); (2) furnishing of the information solicited is voluntary; and (3) the principal purpose for which the information is used by the U.S. Patent and Trademark Office is to process and/or examine your submission related to a patent application or patent. If you do not furnish the requested information, the U.S. Patent and Trademark Office may not be able to process and/or examine your submission, which may result in termination of proceedings or abandonment of the application or expiration of the patent.

The information provided by you in this form will be subject to the following routine uses:

1. The information on this form will be treated confidentially to the extent allowed under the Freedom of Information Act (5 U.S.C. 552) and the Privacy Act (5 U.S.C. 552a). Records from this system of records may be disclosed to the Department of Justice to determine whether the Freedom of Information Act requires disclosure of these record s.

2. A record from this system of records may be disclosed, as a routine use, in the course of presenting evidence to a court, magistrate, or administrative tribunal, including disclosures to opposing counsel in the course of settlement negotiations.

3. A record in this system of records may be disclosed, as a routine use, to a Member of Congress submitting a request involving an individual, to whom the record pertains, when the individual has requested assistance from the Member with respect to the subject matter of the record.

4. A record in this system of records may be disclosed, as a routine use, to a contractor of the Agency having need for the information in order to perform a contract. Recipients of information shall be required to comply with the requirements of the Privacy Act of 1974, as amended, pursuant to 5 U.S.C. 552a(m).

5. A record related to an International Application filed under the Patent Cooperation Treaty in this system of records may be disclosed, as a routine use, to the International Bureau of the World Intellectual Property Organization, pursuant to the Patent Cooperation Treaty.

6. A record in this system of records may be disclosed, as a routine use, to another federal agency for purposes of National Security review (35 U.S.C. 181) and for review pursuant to the Atomic Energy Act (42 U.S.C. 218(c)).

7. A record from this system of records may be disclosed, as a routine use, to the Administrator, General Services, or his/her designee, during an inspection of records conducted by GSA as part of that agency's responsibility to recommend improvements in records management practices and programs, under authority of 44 U.S.C. 2904 and 2906. Such disclosure shall be made in accordance with the GSA regulations governing inspection of records for this purpose, and any other relevant (i.e., GSA or Commerce) directive. Such disclosure shall not be used to make determinations about individuals.

8. A record from this system of records may be disclosed, as a routine use, to the public after either publication of the application pursuant to 35 U.S.C. 122(b) or issuance of a patent pursuant to 35 U.S.C. 151. Further, a record may be disclosed, subject to the limitations of 37 CFR 1.14, as a routine use, to the public if the record was filed in an application which became abandoned or in which the proceedings were terminated and which application is referenced by either a published application, an application open to public inspections or an issued patent.

9. A record from this system of records may be disclosed, as a routine use, to a Federal, State, or local law enforcement agency, if the USPTO becomes aware of a violation or potential violation of law or regulation.

ALL REFERENCES CONSIDERED EXCEPT WHERE LINED THROUGH. /R.K./

SEC et al. v. MRI
SEC Exhibit 1020.0215
IPR2023-00255

Search Notes	Application/Control No.	Applicant(s)/Patent Under Reexamination
	14508767	DUNN, WILLIAM
	Examiner	**Art Unit**
	RICHARD KIM	2871

CPC- SEARCHED		
Symbol	**Date**	**Examiner**

CPC COMBINATION SETS - SEARCHED		
Symbol	**Date**	**Examiner**

US CLASSIFICATION SEARCHED			
Class	**Subclass**	**Date**	**Examiner**

SEARCH NOTES		
Search Notes	**Date**	**Examiner**
EAST search attached	1/22/2015	RHK

INTERFERENCE SEARCH			
US Class/ CPC Symbol	**US Subclass / CPC Group**	**Date**	**Examiner**

SEC et al. v. MRI
SEC Exhibit 1020.0216
IPR2023-00255

EAST Search History

EAST Search History (Prior Art)

Ref #	Hits	Search Query	DBs	Default Operator	Plurals	Time Stamp
S1	23	("4093355" "4593978" "4634225" "5029982" "5088806" "5247374" "5559614" "5767489").pn.	US-PGPUB; USPAT; EPO; DERWENT	OR	ON	2015/01/21 01:46
S2	22	("5748269" "5818010" "6089751" "6157432" "6191839" "6417900" "6535266" "6628355" "6839104" "6885412" "6943768").pn.	US-PGPUB; USPAT; EPO; DERWENT	OR	ON	2015/01/21 01:48
S3	28	("5991153" "6392727" "6961108" "6909486" "7083285" "5869919" "7059757" "7602469" "8269916" "6493440" "7667964").pn.	US-PGPUB; USPAT; EPO; DERWENT	OR	ON	2015/01/21 01:50
S4	16	("20020101553" "20020126248" "20030007109" "20040036834" "20040165139" "20060132699" "20060209266" "20070151664" "20060132699").pn.	US-PGPUB; USPAT; EPO; DERWENT	OR	ON	2015/01/21 01:52
S5	4	("20070065091" "20100171889").pn.	US-PGPUB; USPAT; EPO; DERWENT	OR	ON	2015/01/21 01:53
S6	4392	(349/58).CCLS.	US-PGPUB; USPAT; USOCR	OR	OFF	2015/01/21 02:10
S7	37	S6 and (fan$5 near5 cool)	US-PGPUB; USPAT; EPO; DERWENT	OR	ON	2015/01/21 02:10
S8	103	((H04N9/3144 OR G02F1/133385 OR G02F2201/36 G02F1/133382).CPC.) and ((channel loop plenum) near5 (closed enclosed))	US-PGPUB; USPAT; EPO; DERWENT	OR	ON	2015/01/21 02:13
S9	664	((H04N9/3144 OR G02F1/133385 OR G02F2201/36 G02F1/133382).CPC.) and ((gas air) near5 flow)	US-PGPUB; USPAT; EPO; DERWENT	OR	ON	2015/01/21 02:14
S10	426	((H04N9/3144 OR G02F1/133385 OR G02F2201/36 G02F1/133382).CPC.) and ((gas air) near5 flow) and @ad<"20080516"	US-PGPUB; USPAT; EPO; DERWENT	OR	ON	2015/01/21 02:14

S11	60	("4352961" | "4385210" | "4857887" | "4932485" | "4950072" | "4984445" | "5170195" | "5400414" | "5488385" | "5606341" | "5647151" | "5665938" | "5682216" | "5691886" | "5694141" | "5717564" | "5748269" | "5772300" | "5791770" | "5805255" | "5828768" | "5961289" | "6026866" | "6052629" | "6072459" | "6104451" | "6111630" | "6151401" | "6176421" | "D357198").PN. OR ("6493440").URPN.	US-PGPUB; USPAT; USOCR	OR	ON	2015/01/21 02:38
S12	34249	(closed adj loop).clm.	US-PGPUB; USPAT; USOCR	OR	ON	2015/01/21 02:45
S13	26	(closed adj loop).clm. and dunn.in.	US-PGPUB; USPAT; USOCR	OR	ON	2015/01/21 02:45
S14	40	(plenum).clm. and dunn.in.	US-PGPUB; USPAT; USOCR	OR	ON	2015/01/21 02:48
S15	1	("6493440").PN.	US-PGPUB; USPAT; USOCR	OR	OFF	2015/01/21 02:50
S16	135	((H04N9/3144 OR G02F1/133385 OR G02F2201/36 G02F1/133382).CPC. and (((heat adj sink) fin) near5 (fan air loop flow))) and ((gas air) near5 flow) and @ad<"20080516"	US-PGPUB; USPAT; EPO; DERWENT	OR	ON	2015/01/21 02:51
S17	208	((H04N9/3144 OR G02F1/133385 OR G02F2201/36 G02F1/133382).CPC. and (((heat adj sink) fin) near5 (fan air loop flow ciruclat))) and @ad<"20080516"	US-PGPUB; USPAT; EPO; DERWENT	OR	ON	2015/01/21 02:51
S18	209	((H04N9/3144 OR G02F1/133385 OR G02F2201/36 G02F1/133382).CPC. and (((heat adj sink) fin) near5 (fan air loop flow circulat$5))) and @ad<"20080516"	US-PGPUB; USPAT; EPO; DERWENT	OR	ON	2015/01/21 02:52
S19	6	(open adj loop).clm. and dunn.in.	US-PGPUB; USPAT; USOCR	OR	ON	2015/01/21 03:17
S20	1	("5991153").PN.	US-PGPUB; USPAT; USOCR	OR	OFF	2015/01/21 19:52
S21	1	("6493440").PN.	US-PGPUB; USPAT; USOCR	OR	OFF	2015/01/21 20:20
S22	4392	(349/58).CCLS.	US-PGPUB; USPAT; USOCR	OR	OFF	2015/01/21 20:29
S23	31	S22 and (air near5 fin)	US-PGPUB;	OR	ON	2015/01/21 20:29

SEC et al. v. MRI
SEC Exhibit 1020.0218
IPR2023-00255

			USPAT; EPO; DERWENT			
S24	0	S22 and (air near5 fin near5 blow)	US-PGPUB; USPAT; EPO; DERWENT	OR	ON	2015/01/21 20:30
S25	106	((H04N9/3144 OR G02F1/133385 OR G02F2201/36 G02F1/133382).CPC. and (((heat adj sink) fin) near5 (fan blow))) and @ad<"20080516"	US-PGPUB; USPAT; EPO; DERWENT	OR	ON	2015/01/21 20:30
S26	4392	(349/58).CCLS.	US-PGPUB; USPAT; USOCR	OR	OFF	2015/01/21 20:41
S27	0	S26 and ((window) near5 second near5 laminate)	US-PGPUB; USPAT; EPO; DERWENT	OR	ON	2015/01/21 20:41
S28	1	S26 and ((protective adj layer) near5 window)	US-PGPUB; USPAT; EPO; DERWENT	OR	ON	2015/01/21 20:41
S29	8	dunn.in. and plenum and sensing.clm.	US-PGPUB; USPAT; EPO; DERWENT	OR	ON	2015/01/21 20:47
S30	10	dunn.in. and plenum and glass.clm.	US-PGPUB; USPAT; EPO; DERWENT	OR	ON	2015/01/21 20:51
S31	8	dunn.in. and plenum and bond.clm.	US-PGPUB; USPAT; EPO; DERWENT	OR	ON	2015/01/21 20:51
S32	808	((H04N9/3144 OR G02F1/133385 OR G02F2201/36 G02F1/133382).CPC. and (((backlight) near5 (fan air circulat$5)) cool$5)) and @ad<"20080516"	US-PGPUB; USPAT; EPO; DERWENT	OR	ON	2015/01/21 22:25
S33	1	("20030104210").PN.	US-PGPUB; USPAT; USOCR	OR	OFF	2015/01/22 13:34

EAST Search History (Interference)

<This search history is empty>

1/22/2015 2:48:57 PM
C:\Users\rkim3\Documents\EAST\Workspaces\14508767a.wsp

SEC et al. v. MRI
SEC Exhibit 1020.0219
IPR2023-00255

IN THE UNITED STATES PATENT AND TRADEMARK OFFICE

Serial No.:	14/508,767	
Inventors:	Dunn	
Filed:	10/7/2014	
Examiner:	Kim, Richard H	
GAU	2871	**RESPONSE TO NON-FINAL OFFICE ACTION**
Atty Docket:	MAN 2241-010J	

Title: SYSTEM FOR USING CONSTRICTED CONVECTION WITH CLOSED LOOP COOLING SYSTEM AS THE CONVECTION PLATE

This paper is filed in Response to the Office Action mailed on 1/30/2015. A **LISTING OF CLAIMS** begins on page 2, and **REMARKS** begin on page 5. As this response has been submitted within 3 months from the mailing date of the Office Action, no fee for an extension of time is believed to be due.

Please charge any fee deficiency to Deposit Account 19-4076.

LISTING OF CLAIMS

1. (currently amended) A gas cooling system for an electronic display having a display surface and a rear surface, the system comprising:

a closed loop of circulating gas positioned to surround the electronic display; and

an open loop of cooling air travelling along the rear surface of the electronic display without mixing with the circulating gas

wherein the open loop cooling air flows through the center of the closed loop of circulating gas.

2. **(original)** The system of claim 1 further comprising:

a means for transferring heat from the circulating gas to the cooling air.

3. **(original)** The system of claim 1, further comprising:

a transparent anterior plate positioned in front of the display surface to define a gap;

a fan positioned to force the circulating gas through said gap.

4. **(original)** The system of claim 3, further comprising:

a second transparent anterior plate bonded to the first transparent anterior plate.

5. **(original)** The system of claim 1 further comprising:

a metallic layer bonded to the rear surface of the electronic display.

6. **(original)** The system of claim 1, further comprising:

a fan positioned to force cooling air along the rear surface of the electronic display.

7. **(original)** The system of claim 1, further comprising:

a temperature sensing device within said closed loop of circulating gas;

a fan positioned to force circulating gas through the closed loop;

SEC et al. v. MRI
SEC Exhibit 1020.0221
IPR2023-00255

a switch in communication with said temperature sensing device and said fan; and

wherein the fan is switched on when the temperature within the closed loop of circulating gas reaches a threshold value.

8. **(original)** The system of claim 1 wherein:

the flow of open loop cooling air is perpendicular to the flow of circulating gas in the closed loop.

9. **(cancelled)**

10. **(original)** The system of claim 2, wherein:

the means for transferring heat from the circulating gas to the cooling air comprises placing the circulating gas within a plenum and allowing cooling air to contact exterior surfaces of the plenum.

11. **(original)** The system of claim 1 wherein:

the rear surface of the electronic display is the rear surface of an LED backlight.

12. **(original)** A thermally regulated electronic display comprising:

a housing having an entrance and an exhaust;

a liquid crystal stack having a display surface;

an LED backlight with a thermally conductive rear surface positioned posterior to the liquid crystal stack;

a closed loop of circulating gas positioned to surround the liquid crystal stack and LED backlight; and

an open loop of cooling air travelling through the entrance, along the rear surface of the LED backlight, and exhausting out of the display.

13. **(original)** The electronic display of claim 12 wherein:

SEC et al. v. MRI
SEC Exhibit 1020.0222
IPR2023-00255

the flow of open loop cooling air is perpendicular to the flow of circulating gas in the closed loop.

14. **(original)** The electronic display of claim 12 wherein:

the open loop cooling air flows through the closed loop of circulating gas.

15. **(original)** The electronic display of claim 12 further comprising:

a means for transferring heat from the circulating gas to the cooling air.

16. **(original)** The electronic display of claim 15 wherein:

the means for transferring heat from the circulating gas to the cooling air comprises placing the circulating gas within a plenum and allowing cooling air to contact exterior surfaces of the plenum.

17. **(currently amended)** A thermally regulated liquid crystal display assembly, the system comprising:

a liquid crystal stack having a display surface;

an LED backlight with a thermally conductive rear surface positioned posterior to the liquid crystal stack;

a glass plate placed in front of the display surface, the space between the glass plate and display surface defining a channel;

a closed loop of circulating gas positioned to surround the liquid crystal stack and LED backlight where circulating gas flows through the channel; and

an open loop of cooling air <u>contacting</u> ~~travelling along~~ the rear surface of the LED backlight ~~where the cooling air is not permitted to mix with the circulating gas~~.

18. **(original)** The electronic display of claim 17 wherein:

the flow of open loop cooling air is perpendicular to the flow of circulating gas in the closed loop.

SEC et al. v. MRI
SEC Exhibit 1020.0223
IPR2023-00255

19. **(original)** The electronic display of claim 17 further comprising:

a plenum having interior and exterior surfaces where the circulating gas contacts the interior surfaces and the cooling air contacts the exterior surfaces.

SEC et al. v. MRI
SEC Exhibit 1020.0224
IPR2023-00255

REMARKS

Claims 1-19 were pending in the present case at the time of the Office Action. Claims 1 and 17 have been amended. No new claims have been added. Claim 9 has been cancelled.

Allowable Subject Matter

The Examiner has allowed claims 12-16 and has indicated that claim 9 contains allowable subject matter.

Amendments to the Claims

Claim 1 has been amended to include the allowable subject matter of claim 9. Claim 17 has been amended to clarify the subject matter of the claim. It is now clear that the open loop of air contacts the rear surface of the LED backlight. Extraneous subject matter was also removed. No new matter has been added.

Rejections under 35 USC § 102

The Examiner has rejected claims 1-3, 5-7, 10 and 11 as being anticipated by Heady et al. (US 5,991,153). Applicant respectfully traverses.

As noted above, claim 1 has been amended to include the allowable subject matter of claim 9. Applicant respectfully asserts that claim 1 is now allowable with claims 2-8 and 10-11 being allowable as proper dependent claims.

SEC et al. v. MRI
SEC Exhibit 1020.0225
IPR2023-00255

Rejections under 35 USC § 103

The Examiner has rejected claims 4, 6, 8, and 17-19 as being unpatentable over Heady. Applicant respectfully traverses.

Claim 17 requires that the open loop of cooling air contacts the rear surface of the LED backlight. Applicant respectfully asserts that this is not found within Heady. "Although the cooling air is separated from the rear surface, it travels 'along' the rear surface of the backlight." (OA of 1/30/2015, page 5). Applicant respectfully asserts that the Examiner has acknowledged that the open loop of cooling air does not contact the rear surface of the LED backlight, since the cooling air "is separated from the rear surface" of the LED backlight.

Applicant respectfully asserts that claim 17 is allowable with claims 18-19 being allowable as proper dependent claims.

SEC et al. v. MRI
SEC Exhibit 1020.0226
IPR2023-00255

CONCLUSION

In consideration of the arguments above, Applicant submits that all claims in the present case are allowable. Applicant respectfully requests that the Examiner allow the claims in the present application. If the Examiner feels that a telephone interview would help the furtherance of the case this action is welcomed by the Applicant.

The Applicant respectfully submits that the present application is now in condition for allowance and such action is earnestly requested.

Respectfully submitted,

Dated: April 30, 2015 By: /Tyler S. Dunham, Reg No 60364/

Tyler S. Dunham
Registration No. 60,364
Standley Law Group LLP
6300 Riverside Drive
Dublin, Ohio 43017-5315
Telephone: (614) 792-5555
Facsimile: (614) 792-5536

SEC et al. v. MRI
SEC Exhibit 1020.0227
IPR2023-00255

Electronic Acknowledgement Receipt

EFS ID:	22218679
Application Number:	14508767
International Application Number:	
Confirmation Number:	5280
Title of Invention:	System for Using Constricted Convection with Closed Loop Cooling System As the Convection Plate
First Named Inventor/Applicant Name:	William DUNN
Customer Number:	8698
Filer:	Tyler Steven Dunham/Kimberly Hefner
Filer Authorized By:	Tyler Steven Dunham
Attorney Docket Number:	MAN2241-010J
Receipt Date:	30-APR-2015
Filing Date:	07-OCT-2014
Time Stamp:	16:44:42
Application Type:	Utility under 35 USC 111(a)

Payment information:

Submitted with Payment	no

File Listing:

Document Number	Document Description	File Name	File Size(Bytes)/ Message Digest	Multi Part /.zip	Pages (if appl.)
1		20150430_ROA_MAN2241-010J.pdf	31426 2f72734e26b49a80ea81e87d50c3cb320dd0427d	yes	8

	Multipart Description/PDF files in .zip description		
	Document Description	**Start**	**End**
	Amendment/Req. Reconsideration-After Non-Final Reject	1	1
	Claims	2	5
	Applicant Arguments/Remarks Made in an Amendment	6	8
Warnings:			
Information:			
	Total Files Size (in bytes):	31426	

This Acknowledgement Receipt evidences receipt on the noted date by the USPTO of the indicated documents, characterized by the applicant, and including page counts, where applicable. It serves as evidence of receipt similar to a Post Card, as described in MPEP 503.

New Applications Under 35 U.S.C. 111
If a new application is being filed and the application includes the necessary components for a filing date (see 37 CFR 1.53(b)-(d) and MPEP 506), a Filing Receipt (37 CFR 1.54) will be issued in due course and the date shown on this Acknowledgement Receipt will establish the filing date of the application.

National Stage of an International Application under 35 U.S.C. 371
If a timely submission to enter the national stage of an international application is compliant with the conditions of 35 U.S.C. 371 and other applicable requirements a Form PCT/DO/EO/903 indicating acceptance of the application as a national stage submission under 35 U.S.C. 371 will be issued in addition to the Filing Receipt, in due course.

New International Application Filed with the USPTO as a Receiving Office
If a new international application is being filed and the international application includes the necessary components for an international filing date (see PCT Article 11 and MPEP 1810), a Notification of the International Application Number and of the International Filing Date (Form PCT/RO/105) will be issued in due course, subject to prescriptions concerning national security, and the date shown on this Acknowledgement Receipt will establish the international filing date of the application.

PTO/SB/06 (09-11)
Approved for use through 1/31/2014. OMB 0651-0032
U.S. Patent and Trademark Office; U.S. DEPARTMENT OF COMMERCE
Under the Paperwork Reduction Act of 1995, no persons are required to respond to a collection of information unless it displays a valid OMB control number.

PATENT APPLICATION FEE DETERMINATION RECORD

Substitute for Form PTO-875

Application or Docket Number	Filing Date	
14/508,767	10/07/2014	☐ To be Mailed

ENTITY: ☒ LARGE ☐ SMALL ☐ MICRO

APPLICATION AS FILED – PART I

FOR	(Column 1) NUMBER FILED	(Column 2) NUMBER EXTRA	RATE ($)	FEE ($)
☐ BASIC FEE (37 CFR 1.16(a), (b), or (c))	N/A	N/A	N/A	
☐ SEARCH FEE (37 CFR 1.16(k), (i), or (m))	N/A	N/A	N/A	
☐ EXAMINATION FEE (37 CFR 1.16(o), (p), or (q))	N/A	N/A	N/A	
TOTAL CLAIMS (37 CFR 1.16(i))	minus 20 =	*	X $ =	
INDEPENDENT CLAIMS (37 CFR 1.16(h))	minus 3 =	*	X $ =	
☐ APPLICATION SIZE FEE (37 CFR 1.16(s))	If the specification and drawings exceed 100 sheets of paper, the application size fee due is $310 ($155 for small entity) for each additional 50 sheets or fraction thereof. See 35 U.S.C. 41(a)(1)(G) and 37 CFR 1.16(s).			
☐ MULTIPLE DEPENDENT CLAIM PRESENT (37 CFR 1.16(j))				
* If the difference in column 1 is less than zero, enter "0" in column 2.			TOTAL	

APPLICATION AS AMENDED – PART II

AMENDMENT

04/30/2015	(Column 1) CLAIMS REMAINING AFTER AMENDMENT		(Column 2) HIGHEST NUMBER PREVIOUSLY PAID FOR	(Column 3) PRESENT EXTRA	RATE ($)	ADDITIONAL FEE ($)
Total (37 CFR 1.16(i))	* 18	Minus	** 20	= 0	X $80 =	0
Independent (37 CFR 1.16(h))	* 3	Minus	***3	= 0	X $420 =	0
☐ Application Size Fee (37 CFR 1.16(s))						
☐ FIRST PRESENTATION OF MULTIPLE DEPENDENT CLAIM (37 CFR 1.16(j))						
					TOTAL ADD'L FEE	0

AMENDMENT

	(Column 1) CLAIMS REMAINING AFTER AMENDMENT		(Column 2) HIGHEST NUMBER PREVIOUSLY PAID FOR	(Column 3) PRESENT EXTRA	RATE ($)	ADDITIONAL FEE ($)
Total (37 CFR 1.16(i))	*	Minus	**	=	X $ =	
Independent (37 CFR 1.16(h))	*	Minus	***	=	X $ =	
☐ Application Size Fee (37 CFR 1.16(s))						
☐ FIRST PRESENTATION OF MULTIPLE DEPENDENT CLAIM (37 CFR 1.16(j))						
					TOTAL ADD'L FEE	

* If the entry in column 1 is less than the entry in column 2, write "0" in column 3.
** If the "Highest Number Previously Paid For" IN THIS SPACE is less than 20, enter "20".
*** If the "Highest Number Previously Paid For" IN THIS SPACE is less than 3, enter "3".
The "Highest Number Previously Paid For" (Total or Independent) is the highest number found in the appropriate box in column 1.

LIE
/THUY TA/

This collection of information is required by 37 CFR 1.16. The information is required to obtain or retain a benefit by the public which is to file (and by the USPTO to process) an application. Confidentiality is governed by 35 U.S.C. 122 and 37 CFR 1.14. This collection is estimated to take 12 minutes to complete, including gathering, preparing, and submitting the completed application form to the USPTO. Time will vary depending upon the individual case. Any comments on the amount of time you require to complete this form and/or suggestions for reducing this burden, should be sent to the Chief Information Officer, U.S. Patent and Trademark Office, U.S. Department of Commerce, P.O. Box 1450, Alexandria, VA 22313-1450. DO NOT SEND FEES OR COMPLETED FORMS TO THIS ADDRESS. **SEND TO: Commissioner for Patents, P.O. Box 1450, Alexandria, VA 22313-1450.**
If you need assistance in completing the form, call 1-800-PTO-9199 and select option 2.

UNITED STATES PATENT AND TRADEMARK OFFICE

UNITED STATES DEPARTMENT OF COMMERCE
United States Patent and Trademark Office
Address: COMMISSIONER FOR PATENTS
P.O. Box 1450
Alexandria, Virginia 22313-1450
www.uspto.gov

NOTICE OF ALLOWANCE AND FEE(S) DUE

8698 7590 05/12/2015
STANDLEY LAW GROUP LLP
6300 Riverside Drive
Dublin, OH 43017

EXAMINER
KIM, RICHARD H

ART UNIT	PAPER NUMBER
2871	

DATE MAILED: 05/12/2015

APPLICATION NO.	FILING DATE	FIRST NAMED INVENTOR	ATTORNEY DOCKET NO.	CONFIRMATION NO.
14/508,767	10/07/2014	William DUNN	MAN2241-010J	5280

TITLE OF INVENTION: System for Using Constricted Convection with Closed Loop Cooling System As the Convection Plate

APPLN. TYPE	ENTITY STATUS	ISSUE FEE DUE	PUBLICATION FEE DUE	PREV. PAID ISSUE FEE	TOTAL FEE(S) DUE	DATE DUE
nonprovisional	UNDISCOUNTED	$960	$0	$0	$960	08/12/2015

THE APPLICATION IDENTIFIED ABOVE HAS BEEN EXAMINED AND IS ALLOWED FOR ISSUANCE AS A PATENT. PROSECUTION ON THE MERITS IS CLOSED. THIS NOTICE OF ALLOWANCE IS NOT A GRANT OF PATENT RIGHTS. THIS APPLICATION IS SUBJECT TO WITHDRAWAL FROM ISSUE AT THE INITIATIVE OF THE OFFICE OR UPON PETITION BY THE APPLICANT. SEE 37 CFR 1.313 AND MPEP 1308.

THE ISSUE FEE AND PUBLICATION FEE (IF REQUIRED) MUST BE PAID WITHIN THREE MONTHS FROM THE MAILING DATE OF THIS NOTICE OR THIS APPLICATION SHALL BE REGARDED AS ABANDONED. THIS STATUTORY PERIOD CANNOT BE EXTENDED. SEE 35 U.S.C. 151. THE ISSUE FEE DUE INDICATED ABOVE DOES NOT REFLECT A CREDIT FOR ANY PREVIOUSLY PAID ISSUE FEE IN THIS APPLICATION. IF AN ISSUE FEE HAS PREVIOUSLY BEEN PAID IN THIS APPLICATION (AS SHOWN ABOVE), THE RETURN OF PART B OF THIS FORM WILL BE CONSIDERED A REQUEST TO REAPPLY THE PREVIOUSLY PAID ISSUE FEE TOWARD THE ISSUE FEE NOW DUE.

HOW TO REPLY TO THIS NOTICE:

I. Review the ENTITY STATUS shown above. If the ENTITY STATUS is shown as SMALL or MICRO, verify whether entitlement to that entity status still applies.

If the ENTITY STATUS is the same as shown above, pay the TOTAL FEE(S) DUE shown above.

If the ENTITY STATUS is changed from that shown above, on PART B - FEE(S) TRANSMITTAL, complete section number 5 titled "Change in Entity Status (from status indicated above)".

For purposes of this notice, small entity fees are 1/2 the amount of undiscounted fees, and micro entity fees are 1/2 the amount of small entity fees.

II. PART B - FEE(S) TRANSMITTAL, or its equivalent, must be completed and returned to the United States Patent and Trademark Office (USPTO) with your ISSUE FEE and PUBLICATION FEE (if required). If you are charging the fee(s) to your deposit account, section "4b" of Part B - Fee(s) Transmittal should be completed and an extra copy of the form should be submitted. If an equivalent of Part B is filed, a request to reapply a previously paid issue fee must be clearly made, and delays in processing may occur due to the difficulty in recognizing the paper as an equivalent of Part B.

III. All communications regarding this application must give the application number. Please direct all communications prior to issuance to Mail Stop ISSUE FEE unless advised to the contrary.

IMPORTANT REMINDER: Utility patents issuing on applications filed on or after Dec. 12, 1980 may require payment of maintenance fees. It is patentee's responsibility to ensure timely payment of maintenance fees when due.

PTOL-85 (Rev. 02/11)

SEC et al. v. MRI
SEC Exhibit 1020.0231
IPR2023-00255

PART B - FEE(S) TRANSMITTAL

Complete and send this form, together with applicable fee(s), to: Mail **Mail Stop ISSUE FEE**
Commissioner for Patents
P.O. Box 1450
Alexandria, Virginia 22313-1450
or Fax (571)-273-2885

INSTRUCTIONS: This form should be used for transmitting the ISSUE FEE and PUBLICATION FEE (if required). Blocks 1 through 5 should be completed where appropriate. All further correspondence including the Patent, advance orders and notification of maintenance fees will be mailed to the current correspondence address as indicated unless corrected below or directed otherwise in Block 1, by (a) specifying a new correspondence address; and/or (b) indicating a separate "FEE ADDRESS" for maintenance fee notifications.

CURRENT CORRESPONDENCE ADDRESS (Note: Use Block 1 for any change of address)

8698 7590 05/12/2015
STANDLEY LAW GROUP LLP
6300 Riverside Drive
Dublin, OH 43017

Note: A certificate of mailing can only be used for domestic mailings of the Fee(s) Transmittal. This certificate cannot be used for any other accompanying papers. Each additional paper, such as an assignment or formal drawing, must have its own certificate of mailing or transmission.

Certificate of Mailing or Transmission
I hereby certify that this Fee(s) Transmittal is being deposited with the United States Postal Service with sufficient postage for first class mail in an envelope addressed to the Mail Stop ISSUE FEE address above, or being facsimile transmitted to the USPTO (571) 273-2885, on the date indicated below.

(Depositor's name)
(Signature)
(Date)

APPLICATION NO.	FILING DATE	FIRST NAMED INVENTOR	ATTORNEY DOCKET NO.	CONFIRMATION NO.
14/508,767	10/07/2014	William DUNN	MAN2241-010J	5280

TITLE OF INVENTION: System for Using Constricted Convection with Closed Loop Cooling System As the Convection Plate

APPLN. TYPE	ENTITY STATUS	ISSUE FEE DUE	PUBLICATION FEE DUE	PREV. PAID ISSUE FEE	TOTAL FEE(S) DUE	DATE DUE
nonprovisional	UNDISCOUNTED	$960	$0	$0	$960	08/12/2015

EXAMINER	ART UNIT	CLASS-SUBCLASS
KIM, RICHARD H	2871	349-058000

1. Change of correspondence address or indication of "Fee Address" (37 CFR 1.363).
- ❑ Change of correspondence address (or Change of Correspondence Address form PTO/SB/122) attached.
- ❑ "Fee Address" indication (or "Fee Address" Indication form PTO/SB/47; Rev 03-02 or more recent) attached. **Use of a Customer Number is required.**

2. For printing on the patent front page, list
(1) The names of up to 3 registered patent attorneys or agents OR, alternatively,
(2) The name of a single firm (having as a member a registered attorney or agent) and the names of up to 2 registered patent attorneys or agents. If no name is listed, no name will be printed.

1_____
2_____
3_____

3. ASSIGNEE NAME AND RESIDENCE DATA TO BE PRINTED ON THE PATENT (print or type)

PLEASE NOTE: Unless an assignee is identified below, no assignee data will appear on the patent. If an assignee is identified below, the document has been filed for recordation as set forth in 37 CFR 3.11. Completion of this form is NOT a substitute for filing an assignment.

(A) NAME OF ASSIGNEE (B) RESIDENCE: (CITY and STATE OR COUNTRY)

Please check the appropriate assignee category or categories (will not be printed on the patent) : ❑ Individual ❑ Corporation or other private group entity ❑ Government

4a. The following fee(s) are submitted:
- ❑ Issue Fee
- ❑ Publication Fee (No small entity discount permitted)
- ❑ Advance Order - # of Copies _____

4b. Payment of Fee(s): **(Please first reapply any previously paid issue fee shown above)**
- ❑ A check is enclosed.
- ❑ Payment by credit card. Form PTO-2038 is attached.
- ❑ The director is hereby authorized to charge the required fee(s), any deficiency, or credits any overpayment, to Deposit Account Number _____ (enclose an extra copy of this form).

5. **Change in Entity Status** (from status indicated above)
- ❑ Applicant certifying micro entity status. See 37 CFR 1.29 — NOTE: Absent a valid certification of Micro Entity Status (see forms PTO/SB/15A and 15B), issue fee payment in the micro entity amount will not be accepted at the risk of application abandonment.
- ❑ Applicant asserting small entity status. See 37 CFR 1.27 — NOTE: If the application was previously under micro entity status, checking this box will be taken to be a notification of loss of entitlement to micro entity status.
- ❑ Applicant changing to regular undiscounted fee status. — NOTE: Checking this box will be taken to be a notification of loss of entitlement to small or micro entity status, as applicable.

NOTE: This form must be signed in accordance with 37 CFR 1.31 and 1.33. See 37 CFR 1.4 for signature requirements and certifications.

Authorized Signature _____ Date _____

Typed or printed name _____ Registration No. _____

PTOL-85 Part B (10-13) Approved for use through 10/31/2013. OMB 0651-0033 U.S. Patent and Trademark Office; U.S. DEPARTMENT OF COMMERCE

SEC et al. v. MRI
SEC Exhibit 1020.0232
IPR2023-00255

UNITED STATES PATENT AND TRADEMARK OFFICE

UNITED STATES DEPARTMENT OF COMMERCE
United States Patent and Trademark Office
Address: COMMISSIONER FOR PATENTS
P.O. Box 1450
Alexandria, Virginia 22313-1450
www.uspto.gov

APPLICATION NO.	FILING DATE	FIRST NAMED INVENTOR	ATTORNEY DOCKET NO.	CONFIRMATION NO.
14/508,767	10/07/2014	William DUNN	MAN2241-010J	5280

8698 7590 05/12/2015
STANDLEY LAW GROUP LLP
6300 Riverside Drive
Dublin, OH 43017

EXAMINER
KIM, RICHARD H

ART UNIT	PAPER NUMBER
2871	

DATE MAILED: 05/12/2015

Determination of Patent Term Adjustment under 35 U.S.C. 154 (b)
(Applications filed on or after May 29, 2000)

The Office has discontinued providing a Patent Term Adjustment (PTA) calculation with the Notice of Allowance.

Section 1(h)(2) of the AIA Technical Corrections Act amended 35 U.S.C. 154(b)(3)(B)(i) to eliminate the requirement that the Office provide a patent term adjustment determination with the notice of allowance. See Revisions to Patent Term Adjustment, 78 Fed. Reg. 19416, 19417 (Apr. 1, 2013). Therefore, the Office is no longer providing an initial patent term adjustment determination with the notice of allowance. The Office will continue to provide a patent term adjustment determination with the Issue Notification Letter that is mailed to applicant approximately three weeks prior to the issue date of the patent, and will include the patent term adjustment on the patent. Any request for reconsideration of the patent term adjustment determination (or reinstatement of patent term adjustment) should follow the process outlined in 37 CFR 1.705.

Any questions regarding the Patent Term Extension or Adjustment determination should be directed to the Office of Patent Legal Administration at (571)-272-7702. Questions relating to issue and publication fee payments should be directed to the Customer Service Center of the Office of Patent Publication at 1-(888)-786-0101 or (571)-272-4200.

PTOL-85 (Rev. 02/11)

SEC et al. v. MRI
SEC Exhibit 1020.0233
IPR2023-00255

OMB Clearance and PRA Burden Statement for PTOL-85 Part B

The Paperwork Reduction Act (PRA) of 1995 requires Federal agencies to obtain Office of Management and Budget approval before requesting most types of information from the public. When OMB approves an agency request to collect information from the public, OMB (i) provides a valid OMB Control Number and expiration date for the agency to display on the instrument that will be used to collect the information and (ii) requires the agency to inform the public about the OMB Control Number's legal significance in accordance with 5 CFR 1320.5(b).

The information collected by PTOL-85 Part B is required by 37 CFR 1.311. The information is required to obtain or retain a benefit by the public which is to file (and by the USPTO to process) an application. Confidentiality is governed by 35 U.S.C. 122 and 37 CFR 1.14. This collection is estimated to take 12 minutes to complete, including gathering, preparing, and submitting the completed application form to the USPTO. Time will vary depending upon the individual case. Any comments on the amount of time you require to complete this form and/or suggestions for reducing this burden, should be sent to the Chief Information Officer, U.S. Patent and Trademark Office, U.S. Department of Commerce, P.O. Box 1450, Alexandria, Virginia 22313-1450. DO NOT SEND FEES OR COMPLETED FORMS TO THIS ADDRESS. SEND TO: Commissioner for Patents, P.O. Box 1450, Alexandria, Virginia 22313-1450. Under the Paperwork Reduction Act of 1995, no persons are required to respond to a collection of information unless it displays a valid OMB control number.

Privacy Act Statement

The Privacy Act of 1974 (P.L. 93-579) requires that you be given certain information in connection with your submission of the attached form related to a patent application or patent. Accordingly, pursuant to the requirements of the Act, please be advised that: (1) the general authority for the collection of this information is 35 U.S.C. 2(b)(2); (2) furnishing of the information solicited is voluntary; and (3) the principal purpose for which the information is used by the U.S. Patent and Trademark Office is to process and/or examine your submission related to a patent application or patent. If you do not furnish the requested information, the U.S. Patent and Trademark Office may not be able to process and/or examine your submission, which may result in termination of proceedings or abandonment of the application or expiration of the patent.

The information provided by you in this form will be subject to the following routine uses:

1. The information on this form will be treated confidentially to the extent allowed under the Freedom of Information Act (5 U.S.C. 552) and the Privacy Act (5 U.S.C 552a). Records from this system of records may be disclosed to the Department of Justice to determine whether disclosure of these records is required by the Freedom of Information Act.
2. A record from this system of records may be disclosed, as a routine use, in the course of presenting evidence to a court, magistrate, or administrative tribunal, including disclosures to opposing counsel in the course of settlement negotiations.
3. A record in this system of records may be disclosed, as a routine use, to a Member of Congress submitting a request involving an individual, to whom the record pertains, when the individual has requested assistance from the Member with respect to the subject matter of the record.
4. A record in this system of records may be disclosed, as a routine use, to a contractor of the Agency having need for the information in order to perform a contract. Recipients of information shall be required to comply with the requirements of the Privacy Act of 1974, as amended, pursuant to 5 U.S.C. 552a(m).
5. A record related to an International Application filed under the Patent Cooperation Treaty in this system of records may be disclosed, as a routine use, to the International Bureau of the World Intellectual Property Organization, pursuant to the Patent Cooperation Treaty.
6. A record in this system of records may be disclosed, as a routine use, to another federal agency for purposes of National Security review (35 U.S.C. 181) and for review pursuant to the Atomic Energy Act (42 U.S.C. 218(c)).
7. A record from this system of records may be disclosed, as a routine use, to the Administrator, General Services, or his/her designee, during an inspection of records conducted by GSA as part of that agency's responsibility to recommend improvements in records management practices and programs, under authority of 44 U.S.C. 2904 and 2906. Such disclosure shall be made in accordance with the GSA regulations governing inspection of records for this purpose, and any other relevant (i.e., GSA or Commerce) directive. Such disclosure shall not be used to make determinations about individuals.
8. A record from this system of records may be disclosed, as a routine use, to the public after either publication of the application pursuant to 35 U.S.C. 122(b) or issuance of a patent pursuant to 35 U.S.C. 151. Further, a record may be disclosed, subject to the limitations of 37 CFR 1.14, as a routine use, to the public if the record was filed in an application which became abandoned or in which the proceedings were terminated and which application is referenced by either a published application, an application open to public inspection or an issued patent.
9. A record from this system of records may be disclosed, as a routine use, to a Federal, State, or local law enforcement agency, if the USPTO becomes aware of a violation or potential violation of law or regulation.

Notice of Allowability	Application No. 14/508,767	Applicant(s) DUNN, WILLIAM	
	Examiner RICHARD KIM	Art Unit 2871	AIA (First Inventor to File) Status No

-- The MAILING DATE of this communication appears on the cover sheet with the correspondence address--

All claims being allowable, PROSECUTION ON THE MERITS IS (OR REMAINS) CLOSED in this application. If not included herewith (or previously mailed), a Notice of Allowance (PTOL-85) or other appropriate communication will be mailed in due course. **THIS NOTICE OF ALLOWABILITY IS NOT A GRANT OF PATENT RIGHTS.** This application is subject to withdrawal from issue at the initiative of the Office or upon petition by the applicant. See 37 CFR 1.313 and MPEP 1308.

1. ☒ This communication is responsive to *4/30/15*.
   ☐ A declaration(s)/affidavit(s) under **37 CFR 1.130(b)** was/were filed on_____.
2. ☐ An election was made by the applicant in response to a restriction requirement set forth during the interview on _____; the restriction requirement and election have been incorporated into this action.
3. ☒ The allowed claim(s) is/are *1-8 and 10-19*. As a result of the allowed claim(s), you may be eligible to benefit from the **Patent Prosecution Highway** program at a participating intellectual property office for the corresponding application. For more information, please see http://www.uspto.gov/patents/init_events/pph/index.jsp or send an inquiry to PPHfeedback@uspto.gov .
4. ☐ Acknowledgment is made of a claim for foreign priority under 35 U.S.C. § 119(a)-(d) or (f).

   Certified copies:

   a) ☐ All b) ☐ Some *c) ☐ None of the:
   1. ☐ Certified copies of the priority documents have been received.
   2. ☐ Certified copies of the priority documents have been received in Application No. _____ .
   3. ☐ Copies of the certified copies of the priority documents have been received in this national stage application from the International Bureau (PCT Rule 17.2(a)).

   * Certified copies not received: _____.

Applicant has THREE MONTHS FROM THE "MAILING DATE" of this communication to file a reply complying with the requirements noted below. Failure to timely comply will result in ABANDONMENT of this application.
THIS THREE-MONTH PERIOD IS NOT EXTENDABLE.

5. ☐ CORRECTED DRAWINGS (as "replacement sheets") must be submitted.
   ☐ including changes required by the attached Examiner's Amendment / Comment or in the Office action of Paper No./Mail Date _____.

   Identifying indicia such as the application number (see 37 CFR 1.84(c)) should be written on the drawings in the front (not the back) of each sheet. Replacement sheet(s) should be labeled as such in the header according to 37 CFR 1.121(d).
6. ☐ DEPOSIT OF and/or INFORMATION about the deposit of BIOLOGICAL MATERIAL must be submitted. Note the attached Examiner's comment regarding REQUIREMENT FOR THE DEPOSIT OF BIOLOGICAL MATERIAL.

Attachment(s)

1. ☐ Notice of References Cited (PTO-892)
2. ☐ Information Disclosure Statements (PTO/SB/08), Paper No./Mail Date _____
3. ☐ Examiner's Comment Regarding Requirement for Deposit of Biological Material
4. ☐ Interview Summary (PTO-413), Paper No./Mail Date _____ .
5. ☐ Examiner's Amendment/Comment
6. ☒ Examiner's Statement of Reasons for Allowance
7. ☐ Other _____.

SEC et al. v. MRI
SEC Exhibit 1020.0235
IPR2023-00255

1. The present application is being examined under the pre-AIA first to invent provisions.

DETAILED ACTION

Allowable Subject Matter

2. Claims 1-8 and 10-19 allowed.

3. The following is an examiner's statement of reasons for allowance: The prior art of record, taken alone or in combination, fails to teach or disclose, in light of the specifications, **claim 1)** a gas cooling system for an electronic display having a display surface and a rear surface, wherein the open loop cooling air flows through the center of the closed loop of circulating gas; **claim 12)** a thermally regulated electronic display comprising an open loop of cooling air traveling through the entrance, along the rear surface of the LED backlight, and exhausting out of the display; and **claim 17)** a thermally regulated liquid crystal display assembly, the system comprising an open loop of cooling air contacting the rear surface of the LED backlight.

Any comments considered necessary by applicant must be submitted no later than the payment of the issue fee and, to avoid processing delays, should preferably accompany the issue fee. Such submissions should be clearly labeled "Comments on Statement of Reasons for Allowance."

Conclusion

Any inquiry concerning this communication or earlier communications from the examiner should be directed to RICHARD KIM whose telephone number is (571)272-2294. The examiner can normally be reached on 9:00-6:30 M-F.

If attempts to reach the examiner by telephone are unsuccessful, the examiner's supervisor, Bumsuk Won can be reached on (571)272-2713. The fax phone number for the organization where this application or proceeding is assigned is 571-273-8300.

Information regarding the status of an application may be obtained from the Patent Application Information Retrieval (PAIR) system. Status information for published applications may be obtained from either Private PAIR or Public PAIR. Status information for unpublished applications is available through Private PAIR only. For more information about the PAIR system, see http://pair-direct.uspto.gov. Should you have questions on access to the Private PAIR system, contact the Electronic Business Center (EBC) at 866-217-9197 (toll-free). If you would like assistance from a USPTO Customer Service Representative or access to the automated information system, call 800-786-9199 (IN USA OR CANADA) or 571-272-1000.

/RICHARD KIM/
Primary Examiner, Art Unit 2871

EAST Search History

EAST Search History (Prior Art)

Ref #	Hits	Search Query	DBs	Default Operator	Plurals	Time Stamp
L1	107	((H04N9/3144 OR G02F1/133385 OR G02F2201/36 G02F1/133382).CPC.) and ((channel loop plenum) near5 (closed enclosed))	US-PGPUB; USPAT; EPO; DERWENT	OR	ON	2015/05/03 22:35
L2	3	((G02F1/133385 OR G02F2001/133628 OR G02F2201/36 OR G02F1/133382).CPC. and (air adj loop))	US-PGPUB; USPAT; EPO; DERWENT	OR	ON	2015/05/03 22:36
L3	786	((G02F1/133385 OR G02F2001/133628 OR G02F2201/36 OR G02F1/133382).CPC. and (fan$5 blow$5))	US-PGPUB; USPAT; EPO; DERWENT	OR	ON	2015/05/03 22:36
L4	755	((G02F1/133385 OR G02F2001/133628 OR G02F2201/36 OR G02F1/133382).CPC. and (fan$5 blow$5)) and @ad<"20130709"	US-PGPUB; USPAT; EPO; DERWENT	OR	ON	2015/05/03 22:37
L5	706	((G02F1/133385 OR G02F2001/133628 OR G02F2201/36 OR G02F1/133382).CPC. and (fan$5 blow$5) and display) and @ad<"20130709"	US-PGPUB; USPAT; EPO; DERWENT	OR	ON	2015/05/03 22:38
L6	656	((G02F1/133385 OR G02F2001/133628 OR G02F2201/36 OR G02F1/133382).CPC. and (fan$5 blow$5) and display and (light backlight)) and @ad<"20130709"	US-PGPUB; USPAT; EPO; DERWENT	OR	ON	2015/05/03 22:38
L7	296	((G02F2201/36).CPC. and @ad<"20130709")	US-PGPUB; USPAT; EPO; DERWENT	OR	ON	2015/05/03 23:05
L8	10	((G02F2201/36).CPC. and @ad<"20130709") and plenum	US-PGPUB; USPAT; EPO; DERWENT	OR	ON	2015/05/03 23:05
L9	62	((G02F2201/36).CPC. and @ad<"20130709") and exhaust	US-PGPUB; USPAT; EPO; DERWENT	OR	ON	2015/05/03 23:06
L10	24	((G02F2201/36).CPC. and @ad<"20130709") and loop$5	US-PGPUB; USPAT; EPO; DERWENT	OR	ON	2015/05/03 23:09
L11	250	((G02F2201/36).CPC. and @ad<"20130709") and f	US-PGPUB; USPAT; EPO; DERWENT	OR	ON	2015/05/03 23:09
L12	175	((G02F2201/36).CPC. and @ad<"20130709") and fLOW$5	US-PGPUB; USPAT; EPO; DERWENT	OR	ON	2015/05/03 23:09

SEC et al. v. MRI
SEC Exhibit 1020.0238
IPR2023-00255

L13	249	((G02F2201/36).CPC. and @ad<"20130709") and (closed near5 loop air flow)	US-PGPUB; USPAT; EPO; DERWENT	OR	ON	2015/05/03 23:13
L14	30	((G02F2201/36).CPC. and @ad<"20130709") and (closed near5 (loop air flow))	US-PGPUB; USPAT; EPO; DERWENT	OR	ON	2015/05/03 23:13
L15	306	((G02F2201/36).CPC.)	US-PGPUB; USPAT; EPO; DERWENT	OR	ON	2015/05/03 23:15
L16	1084	((H04N9/3144 OR G02F1/133385 OR G02F2201/36 G02F1/133382).CPC. and (blacklight light led)) and @ad<"20080516"	US-PGPUB; USPAT; EPO; DERWENT	OR	ON	2015/05/03 23:18
L17	1	(open adj loop adj cooling adj air).clm.	US-PGPUB; USPAT; EPO; DERWENT	OR	ON	2015/05/03 23:58
L22	192	((H05K7/20163 OR H05K7/202 OR H05K7/20209 OR H05K7/20954).CPC.) and @ad<"20130709" and (display)	US-PGPUB; USPAT; EPO; DERWENT	OR	ON	2015/05/04 00:21

EAST Search History (Interference)

Ref #	Hits	Search Query	DBs	Default Operator	Plurals	Time Stamp
L18	1	(open adj loop adj cooling adj air).clm.	US-PGPUB; USPAT; UPAD	OR	ON	2015/05/03 23:58
L19	717	((H05K7/20163 OR H05K7/202 OR H05K7/20209 OR H05K7/20954).CPC.)	US-PGPUB; USPAT; UPAD	OR	ON	2015/05/04 00:03
L20	658	((H05K7/20163 OR H05K7/202 OR H05K7/20209 OR H05K7/20954).CPC.) and @ad<"20130709"	US-PGPUB; USPAT; UPAD	OR	ON	2015/05/04 00:03
L21	171	((H05K7/20163 OR H05K7/202 OR H05K7/20209 OR H05K7/20954).CPC.) and @ad<"20130709" and (display)	US-PGPUB; USPAT; UPAD	OR	ON	2015/05/04 00:03

5/4/2015 12:33:56 AM
C:\Users\rkim3\Documents\EAST\Workspaces\14508767a.wsp

SEC et al. v. MRI
SEC Exhibit 1020.0239
IPR2023-00255

Search Notes	Application/Control No.	Applicant(s)/Patent Under Reexamination
	14508767	DUNN, WILLIAM
	Examiner	**Art Unit**
	RICHARD KIM	2871

CPC- SEARCHED		
Symbol	**Date**	**Examiner**

CPC COMBINATION SETS - SEARCHED		
Symbol	**Date**	**Examiner**

US CLASSIFICATION SEARCHED			
Class	**Subclass**	**Date**	**Examiner**

SEARCH NOTES		
Search Notes	**Date**	**Examiner**
EAST search attached	1/22/2015	RHK
EAST search attached	5/3/2015	RHK

INTERFERENCE SEARCH			
US Class/ CPC Symbol	**US Subclass / CPC Group**	**Date**	**Examiner**
	PGPUB claim language search	5/3/2015	RHK

SEC et al. v. MRI
SEC Exhibit 1020.0240
IPR2023-00255

UNITED STATES PATENT AND TRADEMARK OFFICE

UNITED STATES DEPARTMENT OF COMMERCE
United States Patent and Trademark Office
Address: COMMISSIONER FOR PATENTS
P.O. Box 1450
Alexandria, Virginia 22313-1450
www.uspto.gov

BIB DATA SHEET

CONFIRMATION NO. 5280

SERIAL NUMBER	FILING or 371(c) DATE	CLASS	GROUP ART UNIT	ATTORNEY DOCKET NO.
14/508,767	10/07/2014 RULE	349	2871	MAN2241-010J

APPLICANTS
Manufacturing Resources International, Inc., Alpharetta, GA, Assignee (with 37 CFR 1.172 Interest);

INVENTORS
William DUNN, Alpharetta, GA;

**** CONTINUING DATA ****************************
This application is a CON of 13/937,777 07/09/2013 PAT 8854572
which is a CON of 13/605,530 09/06/2012 PAT 8482695
which is a CON of 12/620,330 11/17/2009 PAT 8274622
which claims benefit of 61/115,333 11/17/2008
and is a CIP of 12/234,307 09/19/2008 PAT 8767165
which claims benefit of 61/033,064 03/03/2008
and said 12/620,330 11/17/2009
is a CIP of 12/234,360 09/19/2008
which claims benefit of 61/053,713 05/16/2008

**** FOREIGN APPLICATIONS ****************************

**** IF REQUIRED, FOREIGN FILING LICENSE GRANTED ****
10/14/2014

Foreign Priority claimed	❑ Yes ☑ No	❑ Met after Allowance	STATE OR COUNTRY	SHEETS DRAWINGS	TOTAL CLAIMS	INDEPENDENT CLAIMS
35 USC 119(a-d) conditions met	❑ Yes ☑ No		GA	3	19	3
Verified and Acknowledged	/RICHARD H KIM/ Examiner's Signature	Initials				

ADDRESS
STANDLEY LAW GROUP LLP
6300 Riverside Drive
Dublin, OH 43017
UNITED STATES

TITLE
System for Using Constricted Convection with Closed Loop Cooling System As the Convection Plate

FILING FEE RECEIVED		
1600	FEES: Authority has been given in Paper No._____ to charge/credit DEPOSIT ACCOUNT No._____ for following:	❑ All Fees ❑ 1.16 Fees (Filing) ❑ 1.17 Fees (Processing Ext. of time) ❑ 1.18 Fees (Issue) ❑ Other _____ ❑ Credit

SEC et al. v. MRI
SEC Exhibit 1020.0241
IPR2023-00255

Issue Classification	Application/Control No.	Applicant(s)/Patent Under Reexamination
	14508767	DUNN, WILLIAM
	Examiner	**Art Unit**
	RICHARD KIM	2871

CPC

Symbol					Type	Version
H05K		7	/	20954	F	2013-01-01
H05K		7	/	202	I	2013-01-01
H05K		7	/	20163	I	2013-01-01
H05K		7	/	20209	I	2013-01-01
G02F		2201	/	36	A	2013-01-01
			/			
			/			
			/			
			/			
			/			
			/			
			/			
			/			
			/			
			/			

CPC Combination Sets

Symbol					Type	Set	Ranking	Version
			/					
			/					

NONE (Assistant Examiner)	(Date)	**Total Claims Allowed:** 18	
/RICHARD KIM/ Primary Examiner.Art Unit 2871 (Primary Examiner)	5/4/15 (Date)	O.G. Print Claim(s) 1	O.G. Print Figure 1

SEC et al. v. MRI
SEC Exhibit 1020.0242
IPR2023-00255

Issue Classification	Application/Control No.	Applicant(s)/Patent Under Reexamination
	14508767	DUNN, WILLIAM
	Examiner	**Art Unit**
	RICHARD KIM	2871

US ORIGINAL CLASSIFICATION		INTERNATIONAL CLASSIFICATION	
CLASS	SUBCLASS	CLAIMED	NON-CLAIMED

CROSS REFERENCE(S)					
CLASS	SUBCLASS (ONE SUBCLASS PER BLOCK)				

NONE (Assistant Examiner) (Date)	Total Claims Allowed: 18	
/RICHARD KIM/ Primary Examiner.Art Unit 2871 5/4/15 (Primary Examiner) (Date)	O.G. Print Claim(s) 1	O.G. Print Figure 1

U.S. Patent and Trademark Office

Part of Paper No. 20150503

SEC et al. v. MRI
SEC Exhibit 1020.0243
IPR2023-00255

Issue Classification	Application/Control No.	Applicant(s)/Patent Under Reexamination
	14508767	DUNN, WILLIAM
	Examiner	**Art Unit**
	RICHARD KIM	2871

☐ Claims renumbered in the same order as presented by applicant ☐ CPA ☐ T.D. ☐ R.1.47

Final	Original	Final	Original	Final	Original	Final	Original	Final	Original	Final	Original	Final	Original	Final	Original
1	1	16	17												
2	2	17	18												
4	3	18	19												
5	4														
6	5														
7	6														
8	7														
9	8														
	9														
3	10														
10	11														
11	12														
12	13														
13	14														
14	15														
15	16														

NONE (Assistant Examiner)	(Date)	**Total Claims Allowed:** 18	
/RICHARD KIM/ Primary Examiner.Art Unit 2871 (Primary Examiner)	5/4/15 (Date)	O.G. Print Claim(s) 1	O.G. Print Figure 1

U.S. Patent and Trademark Office

Part of Paper No. 20150503

PART B - FEE(S) TRANSMITTAL

Complete and send this form, together with applicable fee(s), to: Mail **Mail Stop ISSUE FEE**
Commissioner for Patents
P.O. Box 1450
Alexandria, Virginia 22313-1450
or Fax (571)-273-2885

INSTRUCTIONS: This form should be used for transmitting the ISSUE FEE and PUBLICATION FEE (if required). Blocks 1 through 5 should be completed where appropriate. All further correspondence including the Patent, advance orders and notification of maintenance fees will be mailed to the current correspondence address as indicated unless corrected below or directed otherwise in Block 1, by (a) specifying a new correspondence address; and/or (b) indicating a separate "FEE ADDRESS" for maintenance fee notifications.

CURRENT CORRESPONDENCE ADDRESS (Note: Use Block 1 for any change of address)

8698 7590 05/12/2015
STANDLEY LAW GROUP LLP
6300 Riverside Drive
Dublin, OH 43017

Note: A certificate of mailing can only be used for domestic mailings of the Fee(s) Transmittal. This certificate cannot be used for any other accompanying papers. Each additional paper, such as an assignment or formal drawing, must have its own certificate of mailing or transmission.

Certificate of Mailing or Transmission
I hereby certify that this Fee(s) Transmittal is being deposited with the United States Postal Service with sufficient postage for first class mail in an envelope addressed to the Mail Stop ISSUE FEE address above, or being facsimile transmitted to the USPTO (571) 273-2885, on the date indicated below.

Kimberly Hefner	(Depositor's name)
/Kimberly Hefner/	(Signature)
May 20, 2015	(Date)

APPLICATION NO.	FILING DATE	FIRST NAMED INVENTOR	ATTORNEY DOCKET NO.	CONFIRMATION NO.
14/508,767	10/07/2014	William DUNN	MAN2241-010J	5280

TITLE OF INVENTION: System for Using Constricted Convection with Closed Loop Cooling System As the Convection Plate

APPLN. TYPE	ENTITY STATUS	ISSUE FEE DUE	PUBLICATION FEE DUE	PREV. PAID ISSUE FEE	TOTAL FEE(S) DUE	DATE DUE
nonprovisional	UNDISCOUNTED	$960	$0	$0	$960	08/12/2015

EXAMINER	ART UNIT	CLASS-SUBCLASS
KIM, RICHARD H	2871	349-058000

1. Change of correspondence address or indication of "Fee Address" (37 CFR 1.363).
- ☐ Change of correspondence address (or Change of Correspondence Address form PTO/SB/122) attached.
- ☐ "Fee Address" indication (or "Fee Address" Indication form PTO/SB/47; Rev 03-02 or more recent) attached. **Use of a Customer Number is required.**

2. For printing on the patent front page, list
(1) The names of up to 3 registered patent attorneys or agents OR, alternatively,
(2) The name of a single firm (having as a member a registered attorney or agent) and the names of up to 2 registered patent attorneys or agents. If no name is listed, no name will be printed.

1 Standley Law Group LLP
2
3

3. ASSIGNEE NAME AND RESIDENCE DATA TO BE PRINTED ON THE PATENT (print or type)

PLEASE NOTE: Unless an assignee is identified below, no assignee data will appear on the patent. If an assignee is identified below, the document has been filed for recordation as set forth in 37 CFR 3.11. Completion of this form is NOT a substitute for filing an assignment.

(A) NAME OF ASSIGNEE	(B) RESIDENCE: (CITY and STATE OR COUNTRY)
MANUFACTURING RESOURCES INTERNATIONAL, INC.	ALPHARETTA, GA

Please check the appropriate assignee category or categories (will not be printed on the patent) : ☐ Individual ☒ Corporation or other private group entity ☐ Government

4a. The following fee(s) are submitted:
- ☒ Issue Fee
- ☐ Publication Fee (No small entity discount permitted)
- ☐ Advance Order - # of Copies _____

4b. Payment of Fee(s): **(Please first reapply any previously paid issue fee shown above)**
- ☐ A check is enclosed.
- ☐ Payment by credit card. Form PTO-2038 is attached.
- ☒ The director is hereby authorized to charge the required fee(s), any deficiency, or credits any overpayment, to Deposit Account Number 19-4076 (enclose an extra copy of this form).

5. **Change in Entity Status** (from status indicated above)
- ☐ Applicant certifying micro entity status. See 37 CFR 1.29 — NOTE: Absent a valid certification of Micro Entity Status (see forms PTO/SB/15A and 15B), issue fee payment in the micro entity amount will not be accepted at the risk of application abandonment.
- ☐ Applicant asserting small entity status. See 37 CFR 1.27 — NOTE: If the application was previously under micro entity status, checking this box will be taken to be a notification of loss of entitlement to micro entity status.
- ☐ Applicant changing to regular undiscounted fee status. — NOTE: Checking this box will be taken to be a notification of loss of entitlement to small or micro entity status, as applicable.

NOTE: This form must be signed in accordance with 37 CFR 1.31 and 1.33. See 37 CFR 1.4 for signature requirements and certifications.

Authorized Signature /Tyler S. Dunham/ Date May 20, 2015
Typed or printed name Tyler S. Dunham Registration No. 60,364

PTOL-85 Part B (10-13) Approved for use through 10/31/2013. OMB 0651-0033 U.S. Patent and Trademark Office; U.S. DEPARTMENT OF COMMERCE

SEC et al. v. MRI
SEC Exhibit 1020.0245
IPR2023-00255

Electronic Patent Application Fee Transmittal

Application Number:	14508767
Filing Date:	07-Oct-2014
Title of Invention:	System for Using Constricted Convection with Closed Loop Cooling System As the Convection Plate
First Named Inventor/Applicant Name:	William DUNN
Filer:	Tyler Steven Dunham/Kimberly Hefner
Attorney Docket Number:	MAN2241-010J

Filed as Large Entity

Filing Fees for Utility under 35 USC 111(a)

Description	Fee Code	Quantity	Amount	Sub-Total in USD($)
Basic Filing:				
Pages:				
Claims:				
Miscellaneous-Filing:				
Petition:				
Patent-Appeals-and-Interference:				
Post-Allowance-and-Post-Issuance:				
Utility Appl Issue Fee	1501	1	960	960

Description	Fee Code	Quantity	Amount	Sub-Total in USD($)
Extension-of-Time:				
Miscellaneous:				
		Total in USD ($)		**960**

Electronic Acknowledgement Receipt	
EFS ID:	22400506
Application Number:	14508767
International Application Number:	
Confirmation Number:	5280
Title of Invention:	System for Using Constricted Convection with Closed Loop Cooling System As the Convection Plate
First Named Inventor/Applicant Name:	William DUNN
Customer Number:	8698
Filer:	Tyler Steven Dunham/Kimberly Hefner
Filer Authorized By:	Tyler Steven Dunham
Attorney Docket Number:	MAN2241-010J
Receipt Date:	20-MAY-2015
Filing Date:	07-OCT-2014
Time Stamp:	13:57:38
Application Type:	Utility under 35 USC 111(a)

Payment information:

Submitted with Payment	yes
Payment Type	Deposit Account
Payment was successfully received in RAM	$960
RAM confirmation Number	195
Deposit Account	194076
Authorized User	HEFNER, KIMBERLY
The Director of the USPTO is hereby authorized to charge indicated fees and credit any overpayment as follows:	

File Listing:

Document Number	Document Description	File Name	File Size(Bytes)/ Message Digest	Multi Part /.zip	Pages (if appl.)
1	Issue Fee Payment (PTO-85B)	20150520_Part_B_Fees_MAN2241-010J.pdf	991631 f1903685a1c45647de4336fb69c70d09c6974537	no	1
Warnings:					
Information:					
2	Fee Worksheet (SB06)	fee-info.pdf	30777 551139b36949a1bdca7b39c6129aac6582544e4b	no	2
Warnings:					
Information:					
		Total Files Size (in bytes):	1022408		

This Acknowledgement Receipt evidences receipt on the noted date by the USPTO of the indicated documents, characterized by the applicant, and including page counts, where applicable. It serves as evidence of receipt similar to a Post Card, as described in MPEP 503.

New Applications Under 35 U.S.C. 111
If a new application is being filed and the application includes the necessary components for a filing date (see 37 CFR 1.53(b)-(d) and MPEP 506), a Filing Receipt (37 CFR 1.54) will be issued in due course and the date shown on this Acknowledgement Receipt will establish the filing date of the application.

National Stage of an International Application under 35 U.S.C. 371
If a timely submission to enter the national stage of an international application is compliant with the conditions of 35 U.S.C. 371 and other applicable requirements a Form PCT/DO/EO/903 indicating acceptance of the application as a national stage submission under 35 U.S.C. 371 will be issued in addition to the Filing Receipt, in due course.

New International Application Filed with the USPTO as a Receiving Office
If a new international application is being filed and the international application includes the necessary components for an international filing date (see PCT Article 11 and MPEP 1810), a Notification of the International Application Number and of the International Filing Date (Form PCT/RO/105) will be issued in due course, subject to prescriptions concerning national security, and the date shown on this Acknowledgement Receipt will establish the international filing date of the application.

UNITED STATES PATENT AND TRADEMARK OFFICE

UNITED STATES DEPARTMENT OF COMMERCE
United States Patent and Trademark Office
Address: COMMISSIONER FOR PATENTS
P.O. Box 1450
Alexandria, Virginia 22313-1450
www.uspto.gov

APPLICATION NO.	FILING DATE	FIRST NAMED INVENTOR	ATTORNEY DOCKET NO.	CONFIRMATION NO.
14/508,767	10/07/2014	William DUNN	MAN2241-010J	5280

8698 7590 05/28/2015
STANDLEY LAW GROUP LLP
6300 Riverside Drive
Dublin, OH 43017

EXAMINER
KIM, RICHARD H

ART UNIT	PAPER NUMBER
2871	

NOTIFICATION DATE	DELIVERY MODE
05/28/2015	ELECTRONIC

Please find below and/or attached an Office communication concerning this application or proceeding.

The time period for reply, if any, is set in the attached communication.

Notice of the Office communication was sent electronically on above-indicated "Notification Date" to the following e-mail address(es):

standleydocketing@standleyllp.com

PTOL-90A (Rev. 04/07)

UNITED STATES PATENT AND TRADEMARK OFFICE

Commissioner for Patents
United States Patent and Trademark Office
P.O. Box 1450
Alexandria, VA 22313-1450
www.uspto.gov

Application No. : 14508767
Applicant : Dunn
Filing Date : 10/07/2014
Date Mailed : 05/28/2015

NOTICE TO FILE CORRECTED APPLICATION PAPERS

Notice of Allowance Mailed

This application has been accorded an Allowance Date and is being prepared for issuance. The application, however, is incomplete for the reasons below.

Applicant is given two (2) months from the mail date of this Notice within which to respond. This time period for reply is extendable under 37 CFR 1.136(a) for only TWO additional MONTHS.

The application is not in compliance with 37 CFR 1.78, as indicated in the attachment. The consequences of failure to respond within the above-identified time period are set forth in the attachment.

Even if the Office has recognized a benefit claim and has entered it into the Office's database and included it on applicant's filing receipt, the benefit claim is not a proper benefit claim unless the reference in compliance with 37 CFR 1.78 is included, depending upon the application's filing date and as indicated in the attachment, in an application data sheet or in the first sentence(s) of the specification and all other requirements are met.

See attachment.

A copy of this notice MUST be returned with the reply. Please address response to "Mail Stop Issue Fee, Commissioner for Patents, P.O. Box 1450, Alexandria, VA 22313-1450".

/Janeen Saxer/
Publication Branch
Office of Data Management
(571) 272-4200

Application No. 14508767

APPLICATION FILED ON OR AFTER MARCH 16, 2013,
NOT IN COMPLIANCE WITH 37 CFR 1.78

[X] The 37 CFR 1.78(c)(2) reference on the application data sheet does not indicate the relationship (continuation, division, continuation-in-part) to the prior U.S. nonprovisional application or international application designating the U.S. See document coded ADS dated 10/07/2014, listing application number(s) 12237365.

[ ] The 37 CFR 1.78(c)(2) reference on the application data sheet does not provide the U.S. nonprovisional application number (series code and serial number) or, with respect to an international PCT application designating the U.S., it provides the international application number or international filing date but not both. See document coded dated , in which the following is missing: .

[ ] The 37 CFR 1.78(c)(2) reference on the application data sheet shows an incorrect, incomplete, or illegible U.S. nonprovisional application number, international PCT application number, or international PCT filing date. See document coded dated , in which the following error was made: .

[ ] The 37 CFR 1.78(c)(2) reference to the prior U.S. nonprovisional application or international application designating the U.S. is not present on an application data sheet, thus removing the validating link under 35 U.S.C. 119(a)-(d) to a prior foreign application or under 35 U.S.C. 119(e) to a prior U.S. provisional application.

[ ] The 37 CFR 1.78(c)(2) reference to the prior U.S. nonprovisional application or international application designating the U.S. is not present on an application data sheet.

[ ] The 37 CFR 1.78(a)(3) reference to the prior U.S. provisional application is not present on an application data sheet.

[ ] The 37 CFR 1.78(a)(3) reference to the prior U.S. provisional application on an application data sheet does not provide the provisional application number (series code and serial number). See document coded dated , in which the following is missing: .

[ ] The 37 CFR 1.78(a)(3) reference to the prior U.S. provisional application on an application data sheet shows an incorrect, incomplete, or illegible U.S. provisional application number. See document coded dated , in which the following error was made: .

[ ] Other: .

HOW TO RESPOND

A proper response to this notice would include: (1) a corrected Application Data Sheet (ADS) pursuant to 37 CFR 1.76(c) which provides the benefit information from the attached filing receipt which would make the benefit information comply with 37 CFR 1.78(c)(2) or 37 CFR 1.78(a)(3) or (2) a petition filed pursuant to the provisions of 37 CFR 1.78(b) or 37 CFR 1.78(d) if the benefit information from the attached filing receipt does not accurately reflect the benefits under 35 U.S.C. 119(e), 120, 121 or 365(c) as claimed by applicant (a grantable petition would include a corrected ADS as required by 37 CFR 1.78(b)(1) or 37 CFR 1.78(d)(1)).

WARNING: If Applicant fails to timely submit a proper response, the benefit information will be deleted and the patent will be printed without the benefit information present.

IN THE UNITED STATES PATENT AND TRADEMARK OFFICE

App. No.:	14/508,767	
Confirmation No.:	5280	
Inventor:	Dunn	**RESPONSE TO NOTICE TO FILE CORRECTED APPLICATION PAPERS**
Filed:	October 7, 2014	
Examiner		
Art Unit	2871	
Docket No.:	MAN2241-010J	
Title:	System for Using Constricted Convection with Closed Loop Cooling System As the Convection Plate	

CERTIFICATE OF TRANSMISSION UNDER 37 CFR § 1.8 (a)
Date of Transmission: June 15, 2015
I hereby certify that this correspondence is being electronically filed via EFS-Web.
/Kimberly D. Hefner/
Kimberly D. Hefner, paralegal

In response to the Notice to File Corrected Application Papers mailed May 28, 2015, Applicant submits herewith a corrected Application Data Sheet as required in the Notice which correctly reflects the relationship to the prior U.S. nonprovisional application.

No fees are believed to be due. However, if any fees are due, please charge them to Standley Law Group LLP's Deposit Account 19-4076.

Applicant respectfully submits that the present application is now in condition for issuance, and such action is earnestly requested. Telephone inquiry to the undersigned to clarify or otherwise expedite prosecution of the application is respectfully encouraged.

Respectfully submitted,

Date: June15, 2015 By: /Tyler S. Dunham/

Tyler S. Dunham
Registration No. 60,364
Standley Law Group LLP
6300 Riverside Dr.
Dublin, OH 43017-5043
Telephone: (614) 792-5555
Fax: (614) 792-5536
E-mail: tdunham@standleyllp.com

PTO/AIA/14 (12-13)
Approved for use through 01/31/2014. OMB 0651-0032
U.S. Patent and Trademark Office; U.S. DEPARTMENT OF COMMERCE
Under the Paperwork Reduction Act of 1995, no persons are required to respond to a collection of information unless it contains a valid OMB control number.

Application Data Sheet 37 CFR 1.76	Attorney Docket Number	MAN2241-010J
	Application Number	
Title of Invention	System for Using Constricted Convection with Closed Loop Cooling System As the Convection Plate	

The application data sheet is part of the provisional or nonprovisional application for which it is being submitted. The following form contains the bibliographic data arranged in a format specified by the United States Patent and Trademark Office as outlined in 37 CFR 1.76.
This document may be completed electronically and submitted to the Office in electronic format using the Electronic Filing System (EFS) or the document may be printed and included in a paper filed application.

Secrecy Order 37 CFR 5.2

☐ Portions or all of the application associated with this Application Data Sheet may fall under a Secrecy Order pursuant to 37 CFR 5.2 (Paper filers only. Applications that fall under Secrecy Order may not be filed electronically.)

Inventor Information:

Inventor 1 Remove

Legal Name

Prefix	Given Name	Middle Name	Family Name	Suffix
	William		DUNN	

Residence Information (Select One) ◉ US Residency ○ Non US Residency ○ Active US Military Service

City	Alpharetta	State/Province	GA	Country of Residence	US

Mailing Address of Inventor:

Address 1	6415 Shiloh Road East		
Address 2			
City	Alpharetta	**State/Province**	GA
Postal Code	30005	**Country**	US

All Inventors Must Be Listed - Additional Inventor Information blocks may be generated within this form by selecting the **Add** button. Add

Correspondence Information:

Enter either Customer Number or complete the Correspondence Information section below.
For further information see 37 CFR 1.33(a).

☐ **An Address is being provided for the correspondence Information of this application.**

Customer Number	08698		
Email Address	standleydocketing@standleyllp.com	Add Email	Remove Email

Application Information:

Title of the Invention	System for Using Constricted Convection with Closed Loop Cooling System As the Convection Plate		
Attorney Docket Number	MAN2241-010J	**Small Entity Status Claimed**	☐
Application Type	Nonprovisional		
Subject Matter	Utility		
Total Number of Drawing Sheets (if any)	3	**Suggested Figure for Publication (if any)**	1

Filing By Reference :

SEC et al. v. MRI
SEC Exhibit 1020.0254
IPR2023-00255

PTO/AIA/14 (12-13)
Approved for use through 01/31/2014. OMB 0651-0032
U.S. Patent and Trademark Office; U.S. DEPARTMENT OF COMMERCE
Under the Paperwork Reduction Act of 1995, no persons are required to respond to a collection of information unless it contains a valid OMB control number.

Application Data Sheet 37 CFR 1.76	Attorney Docket Number	MAN2241-010J
	Application Number	
Title of Invention	System for Using Constricted Convection with Closed Loop Cooling System As the Convection Plate	

Only complete this section when filing an application by reference under 35 U.S.C. 111(c) and 37 CFR 1.57(a). Do not complete this section if application papers including a specification and any drawings are being filed. Any domestic benefit or foreign priority information must be provided in the appropriate section(s) below (i.e., "Domestic Benefit/National Stage Information" and "Foreign Priority Information").

For the purposes of a filing date under 37 CFR 1.53(b), the description and any drawings of the present application are replaced by this reference to the previously filed application, subject to conditions and requirements of 37 CFR 1.57(a).

Application number of the previously filed application	Filing date (YYYY-MM-DD)	Intellectual Property Authority or Country

Publication Information:

☐ Request Early Publication (Fee required at time of Request 37 CFR 1.219)

☐ **Request Not to Publish.** I hereby request that the attached application not be published under 35 U.S.C. 122(b) and certify that the invention disclosed in the attached application **has not and will not** be the subject of an application filed in another country, or under a multilateral international agreement, that requires publication at eighteen months after filing.

Representative Information:

Representative information should be provided for all practitioners having a power of attorney in the application. Providing this information in the Application Data Sheet does not constitute a power of attorney in the application (see 37 CFR 1.32).
Either enter Customer Number or complete the Representative Name section below. If both sections are completed the customer Number will be used for the Representative Information during processing.

Please Select One:	◉ Customer Number	○ US Patent Practitioner	○ Limited Recognition (37 CFR 11.9)
Customer Number	08698		

Domestic Benefit/National Stage Information:

This section allows for the applicant to either claim benefit under 35 U.S.C. 119(e), 120, 121, or 365(c) or indicate National Stage entry from a PCT application. Providing this information in the application data sheet constitutes the specific reference required by 35 U.S.C. 119(e) or 120, and 37 CFR 1.78.
When referring to the current application, please leave the application number blank.

Prior Application Status	Patented			Remove	
Application Number	Continuity Type	Prior Application Number	Filing Date (YYYY-MM-DD)	Patent Number	Issue Date (YYYY-MM-DD)
	Continuation of	13937777	2013-07-09	8854572	2014-10-07
Prior Application Status	Patented			Remove	
Application Number	Continuity Type	Prior Application Number	Filing Date (YYYY-MM-DD)	Patent Number	Issue Date (YYYY-MM-DD)
13937777	Continuation of	13605530	2012-09-06	8482695	2013-07-09

SEC et al. v. MRI
SEC Exhibit 1020.0255
IPR2023-00255

Under the Paperwork Reduction Act of 1995, no persons are required to respond to a collection of information unless it contains a valid OMB control number.

Application Data Sheet 37 CFR 1.76	Attorney Docket Number	MAN2241-010J
	Application Number	
Title of Invention	System for Using Constricted Convection with Closed Loop Cooling System As the Convection Plate	

Prior Application Status	Patented				Remove
Application Number	Continuity Type	Prior Application Number	Filing Date (YYYY-MM-DD)	Patent Number	Issue Date (YYYY-MM-DD)
13605530	Continuation of	12620330	2009-11-17	8274622	2012-09-25
Prior Application Status	Expired				Remove
Application Number	Continuity Type	Prior Application Number	Filing Date (YYYY-MM-DD)		
12620330	Claims benefit of provisional	61115333	2008-11-17		
Prior Application Status	Patented				Remove
Application Number	Continuity Type	Prior Application Number	Filing Date (YYYY-MM-DD)	Patent Number	Issue Date (YYYY-MM-DD)
12620330	Continuation in part of	12234307	2008-09-19	8767165	2014-07-01
Prior Application Status	Expired				Remove
Application Number	Continuity Type	Prior Application Number	Filing Date (YYYY-MM-DD)		
12234307	Claims benefit of provisional	61033064	2008-03-03		
Prior Application Status	Pending				Remove
Application Number	Continuity Type	Prior Application Number	Filing Date (YYYY-MM-DD)		
12620330	Continuation in part of	12234360	2008-09-19		
Prior Application Status	Expired				Remove
Application Number	Continuity Type	Prior Application Number	Filing Date (YYYY-MM-DD)		
12234360	Claims benefit of provisional	61053713	2008-05-16		
Prior Application Status	Pending				Remove
Application Number	Continuity Type	Prior Application Number	Filing Date (YYYY-MM-DD)		
12620330	~~Claims benefit of provisional~~ Continuation in part of	12237365	2008-09-24		
Prior Application Status	Expired				Remove
Application Number	Continuity Type	Prior Application Number	Filing Date (YYYY-MM-DD)		
12237365	Claims benefit of provisional	61057599	2008-05-30		
Prior Application Status	Patented				Remove
Application Number	Continuity Type	Prior Application Number	Filing Date (YYYY-MM-DD)	Patent Number	Issue Date (YYYY-MM-DD)
12620330	Continuation in part of	12411925	2009-03-26	8854595	2014-10-07
Prior Application Status	Expired				Remove
Application Number	Continuity Type	Prior Application Number	Filing Date (YYYY-MM-DD)		
12411925	Claims benefit of provisional	61039454	2008-03-26		
Prior Application Status	Pending				Remove
Application Number	Continuity Type	Prior Application Number	Filing Date (YYYY-MM-DD)		
12620330	Continuation in part of	12235200	2008-09-22		
Prior Application Status	Expired				Remove

SEC et al. v. MRI
SEC Exhibit 1020.0256
IPR2023-00255

Under the Paperwork Reduction Act of 1995, no persons are required to respond to a collection of information unless it contains a valid OMB control number.

Application Data Sheet 37 CFR 1.76	Attorney Docket Number	MAN2241-010J
	Application Number	
Title of Invention	System for Using Constricted Convection with Closed Loop Cooling System As the Convection Plate	

Application Number	Continuity Type	Prior Application Number	Filing Date (YYYY-MM-DD)
12235200	Claims benefit of provisional	61076126	2008-06-26
Prior Application Status	Patented	Remove	

Application Number	Continuity Type	Prior Application Number	Filing Date (YYYY-MM-DD)	Patent Number	Issue Date (YYYY-MM-DD)
12620330	Continuation in part of	12556029	2009-09-09	8373841	2013-02-12
Prior Application Status	Expired	Remove			

Application Number	Continuity Type	Prior Application Number	Filing Date (YYYY-MM-DD)
12556029	Claims benefit of provisional	61095615	2008-09-09

Additional Domestic Benefit/National Stage Data may be generated within this form by selecting the **Add** button.

Foreign Priority Information:

This section allows for the applicant to claim priority to a foreign application. Providing this information in the application data sheet constitutes the claim for priority as required by 35 U.S.C. 119(b) and 37 CFR 1.55(d). When priority is claimed to a foreign application that is eligible for retrieval under the priority document exchange program (PDX)[i] the information will be used by the Office to automatically attempt retrieval pursuant to 37 CFR 1.55(h)(1) and (2). Under the PDX program, applicant bears the ultimate responsibility for ensuring that a copy of the foreign application is received by the Office from the participating foreign intellectual property office, or a certified copy of the foreign priority application is filed, within the time period specified in 37 CFR 1.55(g)(1).

Remove

Application Number	Country[i]	Filing Date (YYYY-MM-DD)	Access Code[i] (if applicable)

Additional Foreign Priority Data may be generated within this form by selecting the **Add** button.

Statement under 37 CFR 1.55 or 1.78 for AIA (First Inventor to File) Transition Applications

☐ This application (1) claims priority to or the benefit of an application filed before March 16, 2013 and (2) also contains, or contained at any time, a claim to a claimed invention that has an effective filing date on or after March 16, 2013.
NOTE: By providing this statement under 37 CFR 1.55 or 1.78, this application, with a filing date on or after March 16, 2013, will be examined under the first inventor to file provisions of the AIA.

SEC et al. v. MRI
SEC Exhibit 1020.0257
IPR2023-00255

PTO/AIA/14 (12-13)
Approved for use through 01/31/2014. OMB 0651-0032
U.S. Patent and Trademark Office; U.S. DEPARTMENT OF COMMERCE
Under the Paperwork Reduction Act of 1995, no persons are required to respond to a collection of information unless it contains a valid OMB control number.

Application Data Sheet 37 CFR 1.76	Attorney Docket Number	MAN2241-010J
	Application Number	
Title of Invention	System for Using Constricted Convection with Closed Loop Cooling System As the Convection Plate	

Authorization to Permit Access:

☐ Authorization to Permit Access to the Instant Application by the Participating Offices

If checked, the undersigned hereby grants the USPTO authority to provide the European Patent Office (EPO), the Japan Patent Office (JPO), the Korean Intellectual Property Office (KIPO), the World Intellectual Property Office (WIPO), and any other intellectual property offices in which a foreign application claiming priority to the instant patent application is filed access to the instant patent application. See 37 CFR 1.14(c) and (h). This box should not be checked if the applicant does not wish the EPO, JPO, KIPO, WIPO, or other intellectual property office in which a foreign application claiming priority to the instant patent application is filed to have access to the instant patent application.

In accordance with 37 CFR 1.14(h)(3), access will be provided to a copy of the instant patent application with respect to: 1) the instant patent application-as-filed; 2) any foreign application to which the instant patent application claims priority under 35 U.S.C. 119(a)-(d) if a copy of the foreign application that satisfies the certified copy requirement of 37 CFR 1.55 has been filed in the instant patent application; and 3) any U.S. application-as-filed from which benefit is sought in the instant patent application.

In accordance with 37 CFR 1.14(c), access may be provided to information concerning the date o f filing this Authorization.

Applicant Information:

Providing assignment information in this section does not substitute for compliance with any requirement of part 3 of Title 37 of CFR to have an assignment recorded by the Office.

Applicant 1

If the applicant is the inventor (or the remaining joint inventor or inventors under 37 CFR 1.45), this section should not be completed. The information to be provided in this section is the name and address of the legal representative who is the applicant under 37 CFR 1.43; or the name and address of the assignee, person to whom the inventor is under an obligation to assign the invention, or person who otherwise shows sufficient proprietary interest in the matter who is the applicant under 37 CFR 1.46. If the applicant is an applicant under 37 CFR 1.46 (assignee, person to whom the inventor is obligated to assign, or person who otherwise shows sufficient proprietary interest) together with one or more joint inventors, then the joint inventor or inventors who are also the applicant should be identified in this section.

Clear

◉ Assignee ○ Legal Representative under 35 U.S.C. 117 ○ Joint Inventor

○ Person to whom the inventor is obligated to assign. ○ Person who shows sufficient proprietary interest

If applicant is the legal representative, indicate the authority to file the patent application, the inventor is:

Name of the Deceased or Legally Incapacitated Inventor :

If the Applicant is an Organization check here. ☒

Organization Name	Manufacturing Resources International, Inc.

SEC et al. v. MRI
SEC Exhibit 1020.0258
IPR2023-00255

PTO/AIA/14 (12-13)
Approved for use through 01/31/2014. OMB 0651-0032
U.S. Patent and Trademark Office; U.S. DEPARTMENT OF COMMERCE
Under the Paperwork Reduction Act of 1995, no persons are required to respond to a collection of information unless it contains a valid OMB control number.

Application Data Sheet 37 CFR 1.76	Attorney Docket Number	MAN2241-010J
	Application Number	
Title of Invention	System for Using Constricted Convection with Closed Loop Cooling System As the Convection Plate	

Mailing Address Information For Applicant:			
Address 1	6415 Shiloh Road East		
Address 2			
City	Alpharetta	**State/Province**	GA
Country i	US	Postal Code	30005
Phone Number		Fax Number	
Email Address			

Additional Applicant Data may be generated within this form by selecting the Add button.

Assignee Information including Non-Applicant Assignee Information:

Providing assignment information in this section does not subsitute for compliance with any requirement of part 3 of Title 37 of CFR to have an assignment recorded by the Office.

Assignee 1

Complete this section if assignee information, including non-applicant assignee information, is desired to be included on the patent application publication . An assignee-applicant identified in the "Applicant Information" section will appear on the patent application publication as an applicant. For an assignee-applicant, complete this section only if identification as an assignee is also desired on the patent application publication.

If the Assignee or Non-Applicant Assignee is an Organization check here. ☐

Prefix	**Given Name**	Middle Name	**Family Name**	Suffix

Mailing Address Information For Assignee including Non-Applicant Assignee:			
Address 1			
Address 2			
City		**State/Province**	
Country i		Postal Code	
Phone Number		Fax Number	
Email Address			

Additional Assignee or Non-Applicant Assignee Data may be generated within this form by selecting the Add button.

SEC et al. v. MRI
SEC Exhibit 1020.0259
IPR2023-00255

Under the Paperwork Reduction Act of 1995, no persons are required to respond to a collection of information unless it contains a valid OMB control number.

Application Data Sheet 37 CFR 1.76	Attorney Docket Number	MAN2241-010J
	Application Number	
Title of Invention	System for Using Constricted Convection with Closed Loop Cooling System As the Convection Plate	

Signature:

NOTE: This form must be signed in accordance with 37 CFR 1.33. See 37 CFR 1.4 for signature requirements and certifications.					
Signature	/Tyler S. Dunham/			Date (YYYY-MM-DD)	2013-07-09
First Name	Tyler	Last Name	Dunham	Registration Number	60364
Additional Signature may be generated within this form by selecting the Add button.					

This collection of information is required by 37 CFR 1.76. The information is required to obtain or retain a benefit by the public which is to file (and by the USPTO to process) an application. Confidentiality is governed by 35 U.S.C. 122 and 37 CFR 1.14. This collection is estimated to take 23 minutes to complete, including gathering, preparing, and submitting the completed application data sheet form to the USPTO. Time will vary depending upon the individual case. Any comments on the amount of time you require to complete this form and/or suggestions for reducing this burden, should be sent to the Chief Information Officer, U.S. Patent and Trademark Office, U.S. Department of Commerce, P.O. Box 1450, Alexandria, VA 22313-1450. DO NOT SEND FEES OR COMPLETED FORMS TO THIS ADDRESS. **SEND TO: Commissioner for Patents, P.O. Box 1450, Alexandria, VA 22313-1450.**

SEC et al. v. MRI
SEC Exhibit 1020.0260
IPR2023-00255

UNITED STATES PATENT AND TRADEMARK OFFICE

UNITED STATES DEPARTMENT OF COMMERCE
United States Patent and Trademark Office
Address: COMMISSIONER FOR PATENTS
P.O. Box 1450
Alexandria, Virginia 22313-1450
www.uspto.gov

APPLICATION NO.	FILING DATE	FIRST NAMED INVENTOR	ATTORNEY DOCKET NO.	CONFIRMATION NO.
14/508,767	10/07/2014	William DUNN	MAN2241-010J	5280

8698 7590 05/28/2015
STANDLEY LAW GROUP LLP
6300 Riverside Drive
Dublin, OH 43017

EXAMINER
KIM, RICHARD H

ART UNIT	PAPER NUMBER
2871	

NOTIFICATION DATE	DELIVERY MODE
05/28/2015	ELECTRONIC

Please find below and/or attached an Office communication concerning this application or proceeding.

The time period for reply, if any, is set in the attached communication.

Notice of the Office communication was sent electronically on above-indicated "Notification Date" to the following e-mail address(es):

standleydocketing@standleyllp.com

PTOL-90A (Rev. 04/07)

UNITED STATES PATENT AND TRADEMARK OFFICE

Commissioner for Patents
United States Patent and Trademark Office
P.O. Box 1450
Alexandria, VA 22313-1450
www.uspto.gov

Application No. : 14508767
Applicant : Dunn
Filing Date : 10/07/2014
Date Mailed : 05/28/2015

NOTICE TO FILE CORRECTED APPLICATION PAPERS

Notice of Allowance Mailed

This application has been accorded an Allowance Date and is being prepared for issuance. The application, however, is incomplete for the reasons below.

Applicant is given two (2) months from the mail date of this Notice within which to respond. This time period for reply is extendable under 37 CFR 1.136(a) for only TWO additional MONTHS.

The application is not in compliance with 37 CFR 1.78, as indicated in the attachment. The consequences of failure to respond within the above-identified time period are set forth in the attachment.

Even if the Office has recognized a benefit claim and has entered it into the Office's database and included it on applicant's filing receipt, the benefit claim is not a proper benefit claim unless the reference in compliance with 37 CFR 1.78 is included, depending upon the application's filing date and as indicated in the attachment, in an application data sheet or in the first sentence(s) of the specification and all other requirements are met.

See attachment.

A copy of this notice MUST be returned with the reply. Please address response to "Mail Stop Issue Fee, Commissioner for Patents, P.O. Box 1450, Alexandria, VA 22313-1450".

/Janeen Saxer/
Publication Branch
Office of Data Management
(571) 272-4200

Application No. 14508767

APPLICATION FILED ON OR AFTER MARCH 16, 2013,
NOT IN COMPLIANCE WITH 37 CFR 1.78

[X] The 37 CFR 1.78(c)(2) reference on the application data sheet does not indicate the relationship (continuation, division, continuation-in-part) to the prior U.S. nonprovisional application or international application designating the U.S. See document coded ADS dated 10/07/2014, listing application number(s) 12237365.

[ ] The 37 CFR 1.78(c)(2) reference on the application data sheet does not provide the U.S. nonprovisional application number (series code and serial number) or, with respect to an international PCT application designating the U.S., it provides the international application number or international filing date but not both. See document coded dated , in which the following is missing: .

[ ] The 37 CFR 1.78(c)(2) reference on the application data sheet shows an incorrect, incomplete, or illegible U.S. nonprovisional application number, international PCT application number, or international PCT filing date. See document coded dated , in which the following error was made: .

[ ] The 37 CFR 1.78(c)(2) reference to the prior U.S. nonprovisional application or international application designating the U.S. is not present on an application data sheet, thus removing the validating link under 35 U.S.C. 119(a)-(d) to a prior foreign application or under 35 U.S.C. 119(e) to a prior U.S. provisional application.

[ ] The 37 CFR 1.78(c)(2) reference to the prior U.S. nonprovisional application or international application designating the U.S. is not present on an application data sheet.

[ ] The 37 CFR 1.78(a)(3) reference to the prior U.S. provisional application is not present on an application data sheet.

[ ] The 37 CFR 1.78(a)(3) reference to the prior U.S. provisional application on an application data sheet does not provide the provisional application number (series code and serial number). See document coded dated , in which the following is missing: .

[ ] The 37 CFR 1.78(a)(3) reference to the prior U.S. provisional application on an application data sheet shows an incorrect, incomplete, or illegible U.S. provisional application number. See document coded dated , in which the following error was made: .

[ ] Other: .

HOW TO RESPOND

A proper response to this notice would include: (1) a corrected Application Data Sheet (ADS) pursuant to 37 CFR 1.76(c) which provides the benefit information from the attached filing receipt which would make the benefit information comply with 37 CFR 1.78(c)(2) or 37 CFR 1.78(a)(3) or (2) a petition filed pursuant to the provisions of 37 CFR 1.78(b) or 37 CFR 1.78(d) if the benefit information from the attached filing receipt does not accurately reflect the benefits under 35 U.S.C. 119(e), 120, 121 or 365(c) as claimed by applicant (a grantable petition would include a corrected ADS as required by 37 CFR 1.78(b)(1) or 37 CFR 1.78(d)(1)).

WARNING: If Applicant fails to timely submit a proper response, the benefit information will be deleted and the patent will be printed without the benefit information present.

Electronic Acknowledgement Receipt

EFS ID:	22634187
Application Number:	14508767
International Application Number:	
Confirmation Number:	5280
Title of Invention:	System for Using Constricted Convection with Closed Loop Cooling System As the Convection Plate
First Named Inventor/Applicant Name:	William DUNN
Customer Number:	8698
Filer:	Tyler Steven Dunham/Kimberly Hefner
Filer Authorized By:	Tyler Steven Dunham
Attorney Docket Number:	MAN2241-010J
Receipt Date:	15-JUN-2015
Filing Date:	07-OCT-2014
Time Stamp:	16:10:19
Application Type:	Utility under 35 USC 111(a)

Payment information:

Submitted with Payment	no

File Listing:

Document Number	Document Description	File Name	File Size(Bytes)/ Message Digest	Multi Part /.zip	Pages (if appl.)
1	Post Allowance Communication - Incoming	20150615_RespToNoticeToFileCorrectedAppPapers_MAN2241-010J.pdf	15248 ccb7068ea5a3ff1c834640c748c77773d91b114f	no	1

Warnings:

Information:

2	Post Allowance Communication - Incoming	20141007_CorrectedADS_MAN 2241-010J.pdf	80999 e17de8f205a6ae155d29393d01ab47da5e3025ae	no	7
Warnings:					
Information:					
3	Post Allowance Communication - Incoming	20150528_NoticeToFileCorrectedAppParts.pdf	115987 c3614a553e62b8b01e4f204ff434894b41862fe5	no	3
Warnings:					
Information:					
			Total Files Size (in bytes):	212234	

This Acknowledgement Receipt evidences receipt on the noted date by the USPTO of the indicated documents, characterized by the applicant, and including page counts, where applicable. It serves as evidence of receipt similar to a Post Card, as described in MPEP 503.

<u>New Applications Under 35 U.S.C. 111</u>
If a new application is being filed and the application includes the necessary components for a filing date (see 37 CFR 1.53(b)-(d) and MPEP 506), a Filing Receipt (37 CFR 1.54) will be issued in due course and the date shown on this Acknowledgement Receipt will establish the filing date of the application.

<u>National Stage of an International Application under 35 U.S.C. 371</u>
If a timely submission to enter the national stage of an international application is compliant with the conditions of 35 U.S.C. 371 and other applicable requirements a Form PCT/DO/EO/903 indicating acceptance of the application as a national stage submission under 35 U.S.C. 371 will be issued in addition to the Filing Receipt, in due course.

<u>New International Application Filed with the USPTO as a Receiving Office</u>
If a new international application is being filed and the international application includes the necessary components for an international filing date (see PCT Article 11 and MPEP 1810), a Notification of the International Application Number and of the International Filing Date (Form PCT/RO/105) will be issued in due course, subject to prescriptions concerning national security, and the date shown on this Acknowledgement Receipt will establish the international filing date of the application.

UNITED STATES PATENT AND TRADEMARK OFFICE

UNITED STATES DEPARTMENT OF COMMERCE
United States Patent and Trademark Office
Address: COMMISSIONER FOR PATENTS
P.O. Box 1450
Alexandria, Virginia 22313-1450
www.uspto.gov

APPLICATION NUMBER	FILING or 371(c) DATE	GRP ART UNIT	FIL FEE REC'D	ATTY.DOCKET.NO	TOT CLAIMS	IND CLAIMS
14/508,767	10/07/2014	2871	1600	MAN2241-010J	19	3

CONFIRMATION NO. 5280

CORRECTED FILING RECEIPT

8698
STANDLEY LAW GROUP LLP
6300 Riverside Drive
Dublin, OH 43017

OC000000075784453

Date Mailed: 06/17/2015

Receipt is acknowledged of this non-provisional patent application. The application will be taken up for examination in due course. Applicant will be notified as to the results of the examination. Any correspondence concerning the application must include the following identification information: the U.S. APPLICATION NUMBER, FILING DATE, NAME OF APPLICANT, and TITLE OF INVENTION. Fees transmitted by check or draft are subject to collection. Please verify the accuracy of the data presented on this receipt. **If an error is noted on this Filing Receipt, please submit a written request for a Filing Receipt Correction. Please provide a copy of this Filing Receipt with the changes noted thereon. If you received a "Notice to File Missing Parts" for this application, please submit any corrections to this Filing Receipt with your reply to the Notice. When the USPTO processes the reply to the Notice, the USPTO will generate another Filing Receipt incorporating the requested corrections**

Inventor(s)

William DUNN, Alpharetta, GA;

Applicant(s)

Manufacturing Resources International, Inc., Alpharetta, GA;

Power of Attorney: The patent practitioners associated with Customer Number 08698

Domestic Priority data as claimed by applicant

This application is a CON of 13/937,777 07/09/2013 PAT 8854572
which is a CON of 13/605,530 09/06/2012 PAT 8482695
which is a CON of 12/620,330 11/17/2009 PAT 8274622
which claims benefit of 61/115,333 11/17/2008
and is a CIP of 12/234,307 09/19/2008 PAT 8767165
which claims benefit of 61/033,064 03/03/2008
and said 12/620,330 11/17/2009
is a CIP of 12/234,360 09/19/2008
which claims benefit of 61/053,713 05/16/2008
and said 12/620,330 11/17/2009
is a CIP of 12/237,365 09/24/2008 PAT 8879042
which claims benefit of 61/057,599 05/30/2008
and said 12/620,330 11/17/2009
is a CIP of 12/411,925 03/26/2009 PAT 8854595
which claims benefit of 61/039,454 03/26/2008
and said 12/620,330 11/17/2009
is a CIP of 12/235,200 09/22/2008
which claims benefit of 61/076,126 06/26/2008
and said 12/620,330 11/17/2009

SEC et al. v. MRI
SEC Exhibit 1020.0266
IPR2023-00255

is a CIP of 12/556,029 09/09/2009 PAT 8373841
which claims benefit of 61/095,615 09/09/2008

Foreign Applications for which priority is claimed (You may be eligible to benefit from the **Patent Prosecution Highway** program at the USPTO. Please see http://www.uspto.gov for more information.) - None.
Foreign application information must be provided in an Application Data Sheet in order to constitute a claim to foreign priority. See 37 CFR 1.55 and 1.76.

If Required, Foreign Filing License Granted: 10/14/2014

The country code and number of your priority application, to be used for filing abroad under the Paris Convention, is **US 14/508,767**

Projected Publication Date: Not Applicable

Non-Publication Request: No

Early Publication Request: No

Title

System for Using Constricted Convection with Closed Loop Cooling System As the Convection Plate

Preliminary Class

349

Statement under 37 CFR 1.55 or 1.78 for AIA (First Inventor to File) Transition Applications: No

PROTECTING YOUR INVENTION OUTSIDE THE UNITED STATES

Since the rights granted by a U.S. patent extend only throughout the territory of the United States and have no effect in a foreign country, an inventor who wishes patent protection in another country must apply for a patent in a specific country or in regional patent offices. Applicants may wish to consider the filing of an international application under the Patent Cooperation Treaty (PCT). An international (PCT) application generally has the same effect as a regular national patent application in each PCT-member country. The PCT process **simplifies** the filing of patent applications on the same invention in member countries, but **does not result** in a grant of "an international patent" and does not eliminate the need of applicants to file additional documents and fees in countries where patent protection is desired.

Almost every country has its own patent law, and a person desiring a patent in a particular country must make an application for patent in that country in accordance with its particular laws. Since the laws of many countries differ in various respects from the patent law of the United States, applicants are advised to seek guidance from specific foreign countries to ensure that patent rights are not lost prematurely.

Applicants also are advised that in the case of inventions made in the United States, the Director of the USPTO must issue a license before applicants can apply for a patent in a foreign country. The filing of a U.S. patent application serves as a request for a foreign filing license. The application's filing receipt contains further information and guidance as to the status of applicant's license for foreign filing.

Applicants may wish to consult the USPTO booklet, "General Information Concerning Patents" (specifically, the section entitled "Treaties and Foreign Patents") for more information on timeframes and deadlines for filing foreign patent applications. The guide is available either by contacting the USPTO Contact Center at 800-786-9199, or it can be viewed on the USPTO website at http://www.uspto.gov/web/offices/pac/doc/general/index.html.

SEC et al. v. MRI
SEC Exhibit 1020.0267
IPR2023-00255

For information on preventing theft of your intellectual property (patents, trademarks and copyrights), you may wish to consult the U.S. Government website, http://www.stopfakes.gov. Part of a Department of Commerce initiative, this website includes self-help "toolkits" giving innovators guidance on how to protect intellectual property in specific countries such as China, Korea and Mexico. For questions regarding patent enforcement issues, applicants may call the U.S. Government hotline at 1-866-999-HALT (1-866-999-4258).

LICENSE FOR FOREIGN FILING UNDER

Title 35, United States Code, Section 184

Title 37, Code of Federal Regulations, 5.11 & 5.15

GRANTED

The applicant has been granted a license under 35 U.S.C. 184, if the phrase "IF REQUIRED, FOREIGN FILING LICENSE GRANTED" followed by a date appears on this form. Such licenses are issued in all applications where the conditions for issuance of a license have been met, regardless of whether or not a license may be required as set forth in 37 CFR 5.15. The scope and limitations of this license are set forth in 37 CFR 5.15(a) unless an earlier license has been issued under 37 CFR 5.15(b). The license is subject to revocation upon written notification. The date indicated is the effective date of the license, unless an earlier license of similar scope has been granted under 37 CFR 5.13 or 5.14.

This license is to be retained by the licensee and may be used at any time on or after the effective date thereof unless it is revoked. This license is automatically transferred to any related applications(s) filed under 37 CFR 1.53(d). This license is not retroactive.

The grant of a license does not in any way lessen the responsibility of a licensee for the security of the subject matter as imposed by any Government contract or the provisions of existing laws relating to espionage and the national security or the export of technical data. Licensees should apprise themselves of current regulations especially with respect to certain countries, of other agencies, particularly the Office of Defense Trade Controls, Department of State (with respect to Arms, Munitions and Implements of War (22 CFR 121-128)); the Bureau of Industry and Security, Department of Commerce (15 CFR parts 730-774); the Office of Foreign AssetsControl, Department of Treasury (31 CFR Parts 500+) and the Department of Energy.

NOT GRANTED

No license under 35 U.S.C. 184 has been granted at this time, if the phrase "IF REQUIRED, FOREIGN FILING LICENSE GRANTED" DOES NOT appear on this form. Applicant may still petition for a license under 37 CFR 5.12, if a license is desired before the expiration of 6 months from the filing date of the application. If 6 months has lapsed from the filing date of this application and the licensee has not received any indication of a secrecy order under 35 U.S.C. 181, the licensee may foreign file the application pursuant to 37 CFR 5.15(b).

SelectUSA

The United States represents the largest, most dynamic marketplace in the world and is an unparalleled location for business investment, innovation, and commercialization of new technologies. The U.S. offers tremendous resources and advantages for those who invest and manufacture goods here. Through SelectUSA, our nation works to promote and facilitate business investment. SelectUSA provides information assistance to the international investor

SEC et al. v. MRI
SEC Exhibit 1020.0268
IPR2023-00255

community; serves as an ombudsman for existing and potential investors; advocates on behalf of U.S. cities, states, and regions competing for global investment; and counsels U.S. economic development organizations on investment attraction best practices. To learn more about why the United States is the best country in the world to develop technology, manufacture products, deliver services, and grow your business, visit http://www.SelectUSA.gov or call +1-202-482-6800.

SEC et al. v. MRI
SEC Exhibit 1020.0269
IPR2023-00255

UNITED STATES PATENT AND TRADEMARK OFFICE

UNITED STATES DEPARTMENT OF COMMERCE
United States Patent and Trademark Office
Address: COMMISSIONER FOR PATENTS
P.O. Box 1450
Alexandria, Virginia 22313-1450
www.uspto.gov

APPLICATION NO.	ISSUE DATE	PATENT NO.	ATTORNEY DOCKET NO.	CONFIRMATION NO.
14/508,767	07/21/2015	9089079	MAN2241-010J	5280

8698 7590 06/30/2015
STANDLEY LAW GROUP LLP
6300 Riverside Drive
Dublin, OH 43017

ISSUE NOTIFICATION

The projected patent number and issue date are specified above.

Determination of Patent Term Adjustment under 35 U.S.C. 154 (b)
(application filed on or after May 29, 2000)

The Patent Term Adjustment is 0 day(s). Any patent to issue from the above-identified application will include an indication of the adjustment on the front page.

If a Continued Prosecution Application (CPA) was filed in the above-identified application, the filing date that determines Patent Term Adjustment is the filing date of the most recent CPA.

Applicant will be able to obtain more detailed information by accessing the Patent Application Information Retrieval (PAIR) WEB site (http://pair.uspto.gov).

Any questions regarding the Patent Term Extension or Adjustment determination should be directed to the Office of Patent Legal Administration at (571)-272-7702. Questions relating to issue and publication fee payments should be directed to the Application Assistance Unit (AAU) of the Office of Data Management (ODM) at (571)-272-4200.

APPLICANT(s) (Please see PAIR WEB site http://pair.uspto.gov for additional applicants):

William DUNN, Alpharetta, GA;
Manufacturing Resources International, Inc., Alpharetta, GA;

The United States represents the largest, most dynamic marketplace in the world and is an unparalleled location for business investment, innovation, and commercialization of new technologies. The USA offers tremendous resources and advantages for those who invest and manufacture goods here. Through SelectUSA, our nation works to encourage and facilitate business investment. To learn more about why the USA is the best country in the world to develop technology, manufacture products, and grow your business, visit SelectUSA.gov.

SEC et al. v. MRI
SEC Exhibit 1020.0270
IPR2023-00255

PATENT ASSIGNMENT COVER SHEET

Electronic Version v1.1
Stylesheet Version v1.2

EPAS ID: PAT3425530

SUBMISSION TYPE:	NEW ASSIGNMENT
NATURE OF CONVEYANCE:	ASSIGNMENT

CONVEYING PARTY DATA

Name	Execution Date
WILLIAM DUNN	12/02/2013

RECEIVING PARTY DATA

Name:	MANUFACTURING RESOURCES INTERNATIONAL, INC.
Street Address:	6415 SHILOH ROAD EAST
City:	ALPHARETTA
State/Country:	GEORGIA
Postal Code:	30005

PROPERTY NUMBERS Total: 1

Property Type	Number
Application Number:	14508767

CORRESPONDENCE DATA

Fax Number: (614)792-5536

Correspondence will be sent to the e-mail address first; if that is unsuccessful, it will be sent using a fax number, if provided; if that is unsuccessful, it will be sent via US Mail.

Phone: 6147925555
Email: standleydocketing@standleyllp.com
Correspondent Name: STANDLEY LAW GROUP LLP
Address Line 1: 6300 RIVERSIDE DRIVE
Address Line 4: DUBLIN, OHIO 43017

ATTORNEY DOCKET NUMBER:	MAN2241-010J
NAME OF SUBMITTER:	TYLER S. DUNHAM
SIGNATURE:	/Tyler S. Dunham/
DATE SIGNED:	07/06/2015
	This document serves as an Oath/Declaration (37 CFR 1.63).

Total Attachments: 2
source=20131205_DecAssign_MAN2241-010I#page1.tif
source=20131205_DecAssign_MAN2241-010I#page2.tif

COMBINED ASSIGNMENT AND DECLARATION (37 CFR 1.63) FOR UTILITY OR DESIGN APPLICATION USING AN APPLICATION DATA SHEET (37 CFR 1.76)

Title of Invention	System for Using Constricted Convection with Closed Loop Cooling System As the Convection Plate

DECLARATION

As the below named inventor, I hereby declare that:

This declaration is directed to: [ ] The attached application, or

[X] United States application or PCT international application number 13/937,777 filed on 09-JUL-2013.

The above-identified application was made or authorized to be made by me.

I believe that I am the original inventor or an original joint inventor of a claimed invention in the application.

I hereby acknowledge that any willful false statement made in this declaration is punishable under 18 U.S.C. 1001 by fine or imprisonment of not more than five (5) years, or both.

ASSIGNMENT

For at least one U.S. dollar ($1.00) and for other good and valuable consideration, the receipt of which is hereby acknowledged, I hereby sell, assign and transfer to Manufacturing Resources International, Inc., a corporation organized under the law of the State of Georgia having an office at 6415 Shiloh Road East, Alpharetta, GA 30005, (hereinafter referred to as the Assignee) my entire right, title and interest, together with all rights of priority, in and to the invention set forth in the above-identified application. I further hereby sell, assign and transfer to the Assignee my entire right, title and interest, together with all rights of priority, in and to my invention as described and/or claimed in any and all applications for patents based on the invention, including divisionals, continuations, renewals, substitutes and reissues thereof, and all rights of priority resulting from any of these patent applications, as well as all foreign counterparts and extensions thereof, together with all patents issuing on any of these applications for the full terms of all of the patents which may be granted on the invention.

I authorize the Assignee to make applications for, to prosecute such applications, and to receive patents for the invention in the United States and any foreign countries, in the Assignee's name.

I promise and agree that I will execute or procure any further necessary assurance of title to the invention and any patents which may issue on the invention. I will, at any time, upon the request and without further consideration, but at the expense of the Assignee, deliver any testimony in any legal proceedings and execute all papers and do all other things that may be necessary or desirable to perfect the title to the invention, or any patents which may be granted therefor, to the Assignee, its successors, assigns, or other legal representatives. I will, at any time, upon the request and at the expense of the Assignee, execute any continuations, divisionals, reissues, or any other additional applications for patents for the invention or any part or parts thereof and any patents issuing thereon are hereby assigned to the Assignee. I will make all rightful oaths, and do all lawful acts required for procuring and enforcing any of the patents, without further compensation, but at the expense of the Assignee, its successors, assigns or other legal representatives.

I authorize and request the Commissioner of Patents and Trademarks to issue any and all Letters Patent of the

United States for the invention, resulting from any of the aforesaid applications to the Assignee.

LEGAL NAME OF INVENTOR

Inventor: William Dunn

Signature: _____ Date: 12-2-13

Note: An application data sheet (PTO/SB/14 or equivalent), including naming the entire inventive entity, must accompany this form or must have been previously filed. Use an additional form for each additional inventor.

Advice from Standley Law Group LLP: It is advisable to obtain two witness signatures to the above inventor signature in the places indicated below, OR in the alternative, it is advisable to obtain a notarization of the above inventor signature in the notary section set forth below. With or without the witness signatures or the notarization, this assignment is a legally binding agreement to assign the invention to the assignee.

Optional (but advisable) witness signatures:

Witness One
Printed Full Legal Name: _____
Signature: _____
Date: _____

Witness Two
Printed Full Legal Name: _____
Signature: _____
Date: _____

Or, optional (but advisable) notarization:

STATE OF Georgia :
COUNTY OF Cobb : SS.

Before me personally appeared William Dunn, to me known to be the same person described in and who executed the foregoing instrument, and acknowledged that he/she executed the same, of his/her own free will and for the purposes set forth. Sworn to before me and subscribed in my presence this 2ND day of December, 2013.

(seal)

Kenneth J Dewhurst
Notary Public

PATENT ASSIGNMENT COVER SHEET

Electronic Version v1.1
Stylesheet Version v1.2

EPAS ID: PAT3432561

SUBMISSION TYPE:	NEW ASSIGNMENT
NATURE OF CONVEYANCE:	SECURITY INTEREST

CONVEYING PARTY DATA

Name	Execution Date
MANUFACTURING RESOURCES INTERNATIONAL, INC.	06/30/2015

RECEIVING PARTY DATA

Name:	FIFTH THIRD BANK
Street Address:	3344 PEACHTREE ROAD NE, SUITE 800
Internal Address:	MAIL DROP X46306
City:	ATLANTA
State/Country:	GEORGIA
Postal Code:	30326

PROPERTY NUMBERS Total: 100

Property Type	Number
Patent Number:	8208115
Patent Number:	8121163
Patent Number:	8829815
Patent Number:	9030129
Patent Number:	8373541
Patent Number:	8379182
Patent Number:	8015452
Patent Number:	8562770
Patent Number:	D595678
Patent Number:	8508155
Patent Number:	8400570
Patent Number:	8128342
Patent Number:	8654302
Patent Number:	8358397
Patent Number:	8569910
Patent Number:	8350799
Patent Number:	8704752
Patent Number:	8803790
Patent Number:	8310824

Property Type	Number
Patent Number:	9072166
Patent Number:	8773633
Patent Number:	8497972
Patent Number:	8760613
Patent Number:	8693185
Patent Number:	8988011
Patent Number:	9026686
Patent Number:	8689343
Patent Number:	8351014
Patent Number:	9030641
Patent Number:	8700226
Patent Number:	8441574
Patent Number:	8823916
Patent Number:	8749749
Patent Number:	8988647
Patent Number:	8418387
Patent Number:	8804091
Patent Number:	8369083
Patent Number:	8649170
Patent Number:	8755021
Patent Number:	9065259
Patent Number:	8988635
Application Number:	12422037
Application Number:	12568896
Application Number:	12234360
Application Number:	14508767
Application Number:	14508621
Application Number:	12235200
Application Number:	14709045
Application Number:	13296981
Application Number:	12505041
Application Number:	14050464
Application Number:	12684608
Application Number:	13747226
Application Number:	12706602
Application Number:	12711578
Application Number:	14453966
Application Number:	14326053

Property Type	Number
Application Number:	13954469
Application Number:	14247658
Application Number:	12986787
Application Number:	14702443
Application Number:	14253543
Application Number:	14475173
Application Number:	14664213
Application Number:	14457611
Application Number:	13206596
Application Number:	13045272
Application Number:	13361305
Application Number:	14346884
Application Number:	13707762
Application Number:	13649764
Application Number:	13858426
Application Number:	14746271
Application Number:	14055499
Application Number:	14192130
Application Number:	14192435
Application Number:	14198141
Application Number:	14201221
Application Number:	14322962
Application Number:	14326059
Application Number:	14558326
Application Number:	14645076
Application Number:	14230765
Application Number:	14689939
Application Number:	14700519
Application Number:	14740581
Application Number:	14740746
Application Number:	14741118
Application Number:	14740865
Application Number:	14740997
Application Number:	62061950
Application Number:	62061512
Application Number:	62055255
Application Number:	62064304
Application Number:	62140164

Property Type	Number
Application Number:	62162420
Application Number:	62161673
Application Number:	62167115
Application Number:	62171323
Application Number:	62183808

CORRESPONDENCE DATA

Fax Number:

Correspondence will be sent to the e-mail address first; if that is unsuccessful, it will be sent using a fax number, if provided; if that is unsuccessful, it will be sent via US Mail.

Phone: 404-322-6285

Email: kevin.fogle@nelsonmullins.com

Correspondent Name: BRADLEY WAHL

Address Line 1: 201 17TH STREET NW

Address Line 2: SUITE 1700

Address Line 4: ATLANTA, GEORGIA 30363

NAME OF SUBMITTER:	BRADLEY WAHL
SIGNATURE:	/Bradley Wahl/
DATE SIGNED:	07/09/2015
	This document serves as an Oath/Declaration (37 CFR 1.63).

Total Attachments: 18

source=Patent Security Agreement MRI#page1.tif
source=Patent Security Agreement MRI#page2.tif
source=Patent Security Agreement MRI#page3.tif
source=Patent Security Agreement MRI#page4.tif
source=Patent Security Agreement MRI#page5.tif
source=Patent Security Agreement MRI#page6.tif
source=Patent Security Agreement MRI#page7.tif
source=Patent Security Agreement MRI#page8.tif
source=Patent Security Agreement MRI#page9.tif
source=Patent Security Agreement MRI#page10.tif
source=Patent Security Agreement MRI#page11.tif
source=Patent Security Agreement MRI#page12.tif
source=Patent Security Agreement MRI#page13.tif
source=Patent Security Agreement MRI#page14.tif
source=Patent Security Agreement MRI#page15.tif
source=Patent Security Agreement MRI#page16.tif
source=Patent Security Agreement MRI#page17.tif
source=Patent Security Agreement MRI#page18.tif

PATENT SECURITY AGREEMENT

[MANUFACTURING RESOURCES INTERNATIONAL, INC.]

This **PATENT SECURITY AGREEMENT** (this "**Agreement**") is made as of June 30, 2015 by **MANUFACTURING RESOURCES INTERNATIONAL, INC.**, a Georgia corporation ("**Debtor**"), and **FIFTH THIRD BANK**, an Ohio banking corporation (the "**Bank**").

W I T N E S S E T H:

WHEREAS, the Debtor, AMERICAN PANEL CORPORATION ("APC"), SHILOH METALWORKS, LLC ("Shiloh Metal"), APC INTELLECTUAL PROPERTY, LLC ("APC IP"), MRI INTELLECTUAL PROPERTY, LLC ("MRI IP"), APC REAL ESTATE HOLDINGS, LLC ("APC Real Estate") and MRI REAL ESTATE HOLDINGS, LLC ("MRI Real Estate") (collectively, the "**Borrowers**") and the Bank have entered into that certain Loan and Security Agreement, dated as of even date herewith (as amended, modified, supplemented, restated or renewed from time to time, the "**Loan Agreement**");

WHEREAS, the Bank has required, as a condition to the extension of the financial accommodations to be extended to the Borrowers under the Loan Agreement, that Debtor pledge and grant to the Bank a Lien on and in its "Patents" (as defined herein) as security for the Obligations;

NOW, THEREFORE, for and in consideration of the premises set forth above and for other good and valuable consideration, the receipt, sufficiency and adequacy of which are hereby acknowledged, the Debtor and the Bank, by its acceptance hereof, hereby agrees as follows:

1. **Defined Terms.** Unless otherwise defined herein, each capitalized term used herein that is defined in the Loan Agreement shall have the meaning specified for such term in the Loan Agreement. The Loan Agreement and the terms and provisions thereof are hereby incorporated herein in their entirety by this reference thereto.

2. **Security Interest in Patents.** To secure the complete and timely payment, performance and satisfaction of all of the Obligations, Debtor hereby grants, assigns, transfers and pledges to the Bank a security interest in and lien on as and by way of a first mortgage and security interest having priority over all other security interests, with power of sale, to the extent permitted by law, conditioned upon the occurrence and during the continuation of an Event of Default, all of Debtor's right, title and interest in and to the following, whether, now existing or hereafter acquired: (a) all patents and patent applications used in Debtor's business and listed on **Schedule I** attached hereto and made a part hereof, and all renewals thereof, (b) all income, royalties, damages and payments now and hereafter due and/or payable under and with respect thereto, including, without limitation, payments under all licenses entered into in connection therewith and damages and payments for past or future infringements or dilutions thereof,

(c) the right to sue or otherwise recover for past, present and future infringements and dilutions thereof, (d) all of Debtor's rights corresponding thereto throughout the world, and (e) all other proceeds and products of the foregoing, including (without limitation) any rights pursuant to its agreements with any other party relating thereto (all of the foregoing patents and patent applications, together with the items described in clauses (a)-(e) in this Section 2 are sometimes hereinafter individually and/or collectively referred to as the "**Patents**"). Prior to any Event of Default, Bank will have no rights or interests in any of the Patents other than the security interest granted herein. Nothing in this Agreement will be construed as an assignment of the Patents to Bank until an occurrence of an Event of Default.

3. **New Patents.** Debtor represents and warrants that, from and after the date of this Agreement, (a) the Patents listed on **Schedule I** are a true, accurate and complete list of all of Debtor's Patents, and (b) no Liens in such Patents have been granted by Debtor to any Person, other than the Bank, and except as permitted in the Loan Agreement. If, prior to payment in full of the Obligations, Debtor shall (i) obtain rights to any new Patents or (ii) become entitled to the benefit of any Patents, the provisions of Section 2 above shall automatically apply thereto, provided that Debtor shall not be under any obligation to take any steps or incur any costs to enforce, create or perfect any lien or security interest in any Patents registered outside the United States of America, including, without limitation, any filing recordation, notice or otherwise in any other county other than the United States of America. Debtor shall give to the Bank written notice of the acquisition of new United States Patents promptly after the occurrence thereof. Debtor may, and hereby authorizes the Bank to, modify this Agreement unilaterally upon Debtor's notice to the Bank (i) by amending **Schedule I** to include any future United States Patents (including patent applications) and (ii) by filing, in addition to and not in substitution for this Agreement, a duplicate original of this Agreement containing on **Schedule I** thereto, as the case may be, such future Patents.

4. **Consent to Use.** Except upon the occurrence and during the continuation of an Event of Default, Debtor may make, have made, use, and sell the inventions disclosed and claimed in the Patents for Debtor's own benefit and account and for none other. Except as otherwise permitted by the Loan Documents, Debtor agrees not to sell or assign its interest in, or grant any sublicense under, the right and license granted to it in this Section without the prior written consent of Bank.

5. **Royalties.** Debtor hereby agrees that the use by the Bank of the Patents as authorized hereunder in connection with the Bank's exercise of its rights and remedies hereunder or pursuant to any Loan Document shall be coextensive with Debtor's rights thereunder and with respect thereto and without any liability for royalties or other related charges from the Bank to Debtor.

6. **Duties of the Debtor.** Debtor shall have the duty, to the extent desirable in the normal conduct of its business, to (a) prosecute diligently any patent application that is part of the Patents pending as of the date hereof or hereafter until the termination of this Agreement, (b) make application on unpatented but patentable items material to the conduct of Debtor's business, as appropriate, giving due consideration to value, importance, cost, and opinion of counsel as to patentabililty, and (c) preserve, maintain, and enforce against infringement all

SEC et al. v. MRI
SEC Exhibit 1020.0279
IPR2023-00255

Patents (other than nonpayment of renewal fees on Patents which are not necessary or useful in the conduct of Debtor's business or operations). Debtor further agrees (i) not to abandon any registered Patent without the prior written consent of the Bank, unless any registered Patent is not material to the conduct of Debtor's business or if such abandonment is otherwise desirable to Debtor in the ordinary course of business, and (ii) to maintain in full force and effect the registered Patents material to the conduct of its business. Any expenses incurred in connection with the foregoing shall be borne by Debtor. The Bank shall not have any duty, other than any duty imposed by law, with respect to the Patents. Without limiting the generality of the foregoing, the Bank shall be under no obligation to take any steps necessary to preserve rights in the Patents against any other parties, but the Bank may do so at its option from and after the occurrence and during the continuance of an Event of Default, and all reasonable out-of-pocket expenses incurred in connection therewith shall be for the account of Debtor and shall be added to the Obligations secured hereby.

7. **Power of Attorney; Cumulative Remedies.** Debtor hereby irrevocably designates, constitutes and appoints the Bank (and all officers and agents of the Bank designated by the Bank in its sole and absolute discretion) as Debtor's true and lawful attorney-in-fact, and authorizes the Bank and any of the Bank's designees, in Debtor's or the Bank's name, conditioned upon the occurrence and during the continuation of an Event of Default, to take any action and execute any instrument necessary or reasonably advisable to accomplish the purposes of this Agreement, and consistent with existing license agreements, including, without limitation, to (i) endorse Debtor's name on all applications, documents, papers and instruments necessary or reasonably desirable for the Bank in the use of the Patents, (ii) assign, pledge, convey or otherwise transfer title in or dispose of the Patents to anyone, (iii) grant or issue any exclusive or nonexclusive license under the Patents to anyone, and (iv) take any other actions with respect to the Patents as the Bank reasonably deems in its best interest. Debtor hereby ratifies all that such attorney shall lawfully do or cause to be done by virtue hereof (except to the extent of any gross negligence, willful misconduct or fraud). This power of attorney is coupled with an interest and shall be irrevocable until the Obligations (other than the Obligations that expressly survive repayment of the Loans) are paid in full. Debtor acknowledges and agrees that this Agreement is not intended to limit or restrict in any way the rights and remedies of the Bank under the Loan Agreement or any other Loan Document, but rather is intended to facilitate the exercise of such rights and remedies.

The Bank shall have, in addition to all other rights and remedies given it by the terms of this Agreement, all rights and remedies allowed by law and the rights and remedies of a secured party under the Uniform Commercial Code as enacted in any jurisdiction in which the Patents may be located or deemed located. Upon the occurrence and during the continuance of an Event of Default and following the expiration of any applicable notice and/or cure periods and the election by the Bank to exercise any of its remedies under the Uniform Commercial Code or other applicable law with respect to the Patents, Debtor agrees to assign, convey and otherwise transfer title in and to the Patents to the Bank or any transferee of the Bank and to execute and deliver to the Bank or any such transferee all such agreements, documents and instruments as may be necessary, in the Bank's sole discretion, to effect such assignment, conveyance and transfer. All of the Bank's rights and remedies with respect to the Patents,

SEC et al. v. MRI
SEC Exhibit 1020.0280
IPR2023-00255

whether established hereby, by the Loan Agreement or by any other agreements or by law, shall be cumulative and may be exercised separately or concurrently. Notwithstanding anything set forth herein to the contrary, it is hereby expressly agreed that upon the occurrence and during the continuance of an Event of Default and following the expiration of any applicable notice and/or cure periods, the Bank may exercise any of the rights and remedies provided in this Agreement, the Loan Agreement or any of the other Loan Documents. Debtor hereby acknowledges and agrees that this Agreement is not intended to limit or restrict in any way the rights and remedies of Bank under the Loan Agreement, but rather is intended to facilitate the exercise of such rights and remedies. Debtor agrees that any notification of intended disposition of any of the Patents required by law shall be deemed reasonably and properly given if given at least 10 days before such disposition.

8. **Successors and Assigns.** This Agreement shall be binding upon Debtor and its successors and assigns, and shall inure to the benefit of Bank and its successors and assigns.

9. **Governing Law.** This Agreement shall be construed and enforced and the rights and duties of the parties shall be governed by in all respects in accordance with the laws and decisions of the State of Georgia, without reference to the conflicts or choice of law principles thereof.

10. **Notices.** All notices or other communications hereunder shall be given in the manner and to the addresses set forth in the Loan Agreement.

(signature page follows)

SEC et al. v. MRI
SEC Exhibit 1020.0281
IPR2023-00255

IN WITNESS WHEREOF, the parties hereto have duly executed this Patent Security Agreement under seal as of the day and year first above written.

DEBTOR:

MANUFACTURING RESOURCES INTERNATIONAL, INC.

By: _____, Pres & CEO
William R. Dunn, President and CEO

Agreed and Accepted as of this June 30, 2015

FIFTH THIRD BANK

By: _____
Name: Zennie W Lynch Jr.
Title: Vice President

SEC et al. v. MRI
SEC Exhibit 1020.0282
IPR2023-00255

Schedule I
To
Patent Security Agreement

Dated as of June 30, 2015

Current U. S. Patents

Name	Record Owner	Registration No.
FLUID COOLED DISPLAY	Manufacturing Resources International, Inc.	8,208,115
SPEAKER CONFIGURATION	Manufacturing Resources International, Inc.	8,223,999
ISOLATED GAS COOLING SYSTEM FOR AN ELECTRONIC DISPLAY	Manufacturing Resources International, Inc.	8,767,165
ISOLATED COOLING SYSTEM HAVING AN INSULATOR GAP AND FRONT POLARIZER	Manufacturing Resources International, Inc.	8,879,042
SYSTEM FOR USING CONSTRICTED CONVECTION WITH CLOSED LOOP PLENUM AS THE CONVECTION PLATE	Manufacturing Resources International, Inc.	8,274,622
SYSTEM FOR USING CONSTRICTED CONVECTION WITH CLOSED LOOP COOLING SYSTEM AS THE CONVECTION PLATE	Manufacturing Resources International, Inc.	8,482,695
SYSTEM FOR USING CONSTRICTED CONVECTION WITH CLOSED LOOP COOLING SYSTEM AS THE CONVECTION PLATE	Manufacturing Resources International, Inc.	8,854,572
CONSTRICTED CONVECTION COOLING SYSTEM FOR AN ELECTRONIC DISPLAY	Manufacturing Resources International, Inc.	8,854,595
COMBINED SERIAL/PARALLEL LIGHT CONFIGURATION AND SINGLE LAYER PCB CONTAINING SAME	Manufacturing Resources International, Inc.	8,351,013
COMBINED SERIAL/PARALLEL LIGHT CONFIGURATION AND SINGLE LAYER PCB CONTAINING THE SAME	Manufacturing Resources International, Inc.	8,648,993
Liquid crystal display assembly comprising an LED backlight assembly and a movable element placed behind the LED backlight assembly having a hinge to allow access to a rear portion of the LED backlight assembly	Manufacturing Resources International, Inc.	8,537,302
DURABLE DISPLAY PANEL WITH IMPACT RESISTANCE	Manufacturing Resources International, Inc.	8,189,134

SEC et al. v. MRI
SEC Exhibit 1020.0283
IPR2023-00255

SYSTEM FOR THERMALLY CONTROLLING DISPLAYS	Manufacturing Resources International, Inc.	8,711,321
BACKLIGHT ADJUSTMENT SYSTEM	Manufacturing Resources International, Inc.	8,125,163
BACKLIGHT ADJUSTMENT SYSTEM	Manufacturing Resources International, Inc.	8,829,815
BACKLIGHT ADJUSTMENT SYSTEM	Manufacturing Resources International, Inc.	9,030,129
SHARED ISOLATED GAS COOLING SYSTEM FOR OPPOSITELY FACING ELECTRONIC DISPLAYS	Manufacturing Resources International, Inc.	8,373,841
COOLING SYSTEM FOR OUTDOOR ELECTRONIC DISPLAYS	Manufacturing Resources International, Inc.	8,379,182
ADVERTISING DISPLAYS	Manufacturing Resources International, Inc.	8,016,452
FRAME SEAL METHODS FOR LCD	Manufacturing Resources International, Inc.	8,562,770
GAS STATION TELEVISION	Manufacturing Resources International, Inc.	D595,678
SYSTEM AND METHOD FOR CALIBRATING BACKLIGHT DEVICES	Manufacturing Resources International, Inc.	8,508,155
SYSTEM AND METHOD FOR DISPLAYING MULTIPLE IMAGES/VIDEOS ON A SINGLE DISPLAY	Manufacturing Resources International, Inc.	8,400,570
MULTIDIRECTIONAL MULTISOUND INFORMATION SYSTEM	Manufacturing Resources International, Inc.	8,128,342
HEAT EXCHANGER FOR AN ELECTRONIC DISPLAY	Manufacturing Resources International, Inc.	8,654,302
SYSTEM FOR COOLING AN ELECTRONIC DISPLAY	Manufacturing Resources International, Inc.	8,358,397
SYSTEM AND METHOD FOR CONTROLLING THE OPERATION PARAMETERS OF A DISPLAY IN RESPONSE TO CURRENT DRAW	Manufacturing Resources International, Inc.	8,569,910
DYNAMIC DIMMING LED BACKLIGHT	Manufacturing Resources International, Inc.	8,350,799
DYNAMIC DIMMING LED BACKLIGHT	Manufacturing Resources International, Inc.	8,704,752
DYNAMIC DIMMING LED BACKLIGHT	Manufacturing Resources International, Inc.	8,803,790
FIELD SERVICEABLE ELECTRONIC DISPLAY	Manufacturing Resources International, Inc.	8,310,824
FIELD SERVICABLE ELECTRONIC DISPLAY	Manufacturing Resources International, Inc.	9,072,166
EXPANDED HEAT SINK FOR ELECTRONIC DISPLAYS	Manufacturing Resources International, Inc.	8,773,633

SEC et al. v. MRI
SEC Exhibit 1020.0284
IPR2023-00255

THERMAL PLATE WITH OPTIONAL COOLING LOOP IN ELECTRONIC DISPLAY	Manufacturing Resources International, Inc.	8,497,972
MODULAR DISTRIBUTED COMPONENTS FOR LED BACKLIGHT	Manufacturing Resources International, Inc.	8,760,613
SYSTEM AND METHOD FOR MAINTAINING A CONSISTENT TEMPERATURE GRADIENT ACROSS AN ELECTRONIC DISPLAY	Manufacturing Resources International, Inc.	8,693,185
SYSTEM AND METHOD FOR MANAGING BACKLIGHT LUMINANCE VARIATIONS	Manufacturing Resources International, Inc.	8,988,011
SYSTEM AND METHOD FOR REMOTELY IDENTIFYING DISPLAY COMPONENTS	Manufacturing Resources International, Inc.	9,026,686
SYSTEM AND METHOD FOR SECURELY TRANSMITTING VIDEO DATA	Manufacturing Resources International, Inc.	8,689,343
HEAT EXCHANGER FOR BACK TO BACK ELECTRONIC DISPLAYS	Manufacturing Resources International, Inc.	8,351,014
HEAT EXCHANGER FOR BACK TO BACK ELECTRONIC DISPLAYS	Manufacturing Resources International, Inc.	9,030,641
A METHOD FOR DRIVING A COOLING FAN WITHIN AN ELECTRONIC DISPLAY	Manufacturing Resources International, Inc.	8,700,226
VISUAL IDENTIFIER FOR IMAGES ON AN ELECTRONIC DISPLAY	Manufacturing Resources International, Inc.	8,441,574
SYSTEM FOR COOLING AN ELECTRONIC IMAGE ASSEMBLY WITH A HEAT EXCHANGER HAVING INTERNAL FANS	Manufacturing Resources International, Inc.	8,823,916
SYSTEM FOR COOLING AN ELECTRONIC IMAGE ASSEMBLY WITH MANIFOLDS AND AMBIENT GAS	Manufacturing Resources International, Inc.	8,749,749
SYSTEM FOR COOLING AN ELECTRONIC IMAGE ASSEMBLY WITH MANIFOLDS AND AMBIENT GAS	Manufacturing Resources International, Inc.	8,988,647
ISOLATED ACCESS ASSEMBLY FOR BACK-TO-BACK ELECTRONIC DISPLAY AND STATIC DISPLAY	Manufacturing Resources International, Inc.	8,418,387
SYSTEM AND METHOD FOR THERMALLY CONTROLLING AN ELECTRONIC DISPLAY WITH REDUCED NOISE EMISSIONS	Manufacturing Resources International, Inc.	8,804,091
SYSTEM AND METHOD FOR SELECTIVELY ENGAGING COOLING FANS WITHIN AN ELECTRONIC DISPLAY	Manufacturing Resources International, Inc.	8,369,083
SYSTEM AND METHOD FOR SELECTIVELY ENGAGING COOLING FANS WITHIN AN ELECTRONIC DISPLAY	Manufacturing Resources International, Inc.	8,649,170
SYSTEM FOR COOLING AN ELECTRONIC IMAGE ASSEMBLY WITH MANIFOLDS AND AMBIENT GAS	Manufacturing Resources International, Inc.	8,755,021

SEC et al. v. MRI
SEC Exhibit 1020.0285
IPR2023-00255

WIRE PASS THROUGH DEVICE	Manufacturing Resources International, Inc.	9,065,259
LIGHTING SYSTEM FOR TRANSPARENT LIQUID CRYSTAL DISPLAY	Manufacturing Resources International, Inc.	8,988,635

SEC et al. v. MRI
SEC Exhibit 1020.0286
IPR2023-00255

Current Foreign Patents

Name	Record Owner	Registration No.
SYSTEM AND METHOD FOR THERMALLY CONTROLLING AN ELECTRONIC DISPLAY	Manufacturing Resources International, Inc.	China 200880124923.0
SYSTEM AND METHOD FOR THERMALLY CONTROLLING AN ELECTRONIC DISPLAY	Manufacturing Resources International, Inc.	Europoe 2225603
SYSTEM AND METHOD FOR THERMALLY CONTROLLING AN ELECTRONIC DISPLAY	Manufacturing Resources International, Inc.	Finland 2225603
SYSTEM AND METHOD FOR THERMALLY CONTROLLING AN ELECTRONIC DISPLAY	Manufacturing Resources International, Inc.	France 2225603
SYSTEM AND METHOD FOR THERMALLY CONTROLLING AN ELECTRONIC DISPLAY	Manufacturing Resources International, Inc.	Germany 602008033034.6
SYSTEM AND METHOD FOR THERMALLY CONTROLLING AN ELECTRONIC DISPLAY	Manufacturing Resources International, Inc.	Great Britain 2225603
SYSTEM AND METHOD FOR THERMALLY CONTROLLING AN ELECTRONIC DISPLAY	Manufacturing Resources International, Inc.	Italy 2225603
SYSTEM AND METHOD FOR THERMALLY CONTROLLING AN ELECTRONIC DISPLAY	Manufacturing Resources International, Inc.	Japan 5351898
SYSTEM AND METHOD FOR THERMALLY CONTROLLING AN ELECTRONIC DISPLAY	Manufacturing Resources International, Inc.	Norway 2225603
SYSTEM AND METHOD FOR THERMALLY CONTROLLING AN ELECTRONIC DISPLAY	Manufacturing Resources International	Russian Federation 2493575
THERMAL CONTROL SYSTEM FOR AN ELECTRONIC DISPLAY	Manufacturing Resources International	Russian Federation 2513043
SYSTEM AND METHOD FOR THERMALLY CONTROLLING AN ELECTRONIC DISPLAY	Manufacturing Resources International	Spain 2493592 T3
SYSTEM AND METHOD FOR THERMALLY CONTROLLING AN ELECTRONIC DISPLAY	Manufacturing Resources International	Sweden 2225603
SYSTEM AND METHOD FOR THERMALLY CONTROLLING AN ELECTRONIC DISPLAY	Manufacturing Resources International	Switzerland 2225603
SYSTEM AND METHOD FOR THERMALLY CONTROLLING AN ELECTRONIC DISPLAY	Manufacturing Resources International	Taiwan I437950

SEC et al. v. MRI
SEC Exhibit 1020.0287
IPR2023-00255

Current U.S. Patent Applications

Name	Record Owner	Application No.
VIDEO BUFFER FOR USE IN ADVERTISEMENT DISPLAYS	Manufacturing Resources International, Inc.	12/422,037
SYSTEM FOR SUPPLYING VARYING CONTENT TO MULTIPLE DISPLAYS USING A SINGLE PLAYER	Manufacturing Resources International, Inc.	12/568,896
ISOLATED GAS COOLING SYSTEM FOR COOLING ELECTRICAL COMPONENTS OF AN ELECTRONIC DISPLAY	Manufacturing Resources International, Inc.	12/234,360
SYSTEM FOR USING CONSTRICTED CONVECTION WITH CLOSED LOOP COOLING SYSTEM AS THE CONVECTION PLATE	Manufacturing Resources International, Inc.	14/508,767
CONSTRICTED CONVECTION COOLING SYSTEM FOR AN ELECTRONIC DISPLAY	Manufacturing Resources International, Inc.	14/508,621
ISOLATED GAS HEATING SYSTEM FOR AN ELECTRONIC DISPLAY	Manufacturing Resources International, Inc.	12/235,200
BACKLIGHT ADJUSTMENT SYSTEM	Manufacturing Resources International, Inc.	14/709,045
GLASS ASSEMBLY	Manufacturing Resources International, Inc.	13/296,981
PHOTOINITIATED OPTICAL ADHESIVE AND METHOD FOR USING SAME	Manufacturing Resources International, Inc.	12/505,041
HEAT EXCHANGER FOR AN ELECTRONIC DISPLAY	Manufacturing Resources International, Inc.	14/050,464
ELECTRONIC DISPLAY WITH MOUNT-ACCESSIBLE COMPONENTS	Manufacturing Resources International, Inc.	12/684,608
SYSTEM FOR COOLING AN ELECTRONIC DISPLAY	Manufacturing Resources International, Inc.	13/747,226
DISPLAY CHARACTERISTIC FEEDBACK LOOP	Manufacturing Resources International, Inc.	12/706,602
SYSTEM FOR DISTRIBUTING A PLURALITY OF UNIQUE VIDEO/AUDIO STREAMS	Manufacturing Resources International, Inc.	12/711,578
DYNAMIC DIMMING LED BACKLIGHT	Manufacturing Resources International, Inc.	14/453,966
EXPANDED HEAT SINK FOR ELECTRONIC DISPLAYS	Manufacturing Resources International, Inc.	14/326,053
THERMAL PLATE WITH OPTIONAL COOLING LOOP IN ELECTRONIC DISPLAY	Manufacturing Resources International, Inc.	13/954,469
SYSTEM AND METHOD FOR MAINTAINING	Manufacturing Resources	14/247,658

SEC et al. v. MRI
SEC Exhibit 1020.0288
IPR2023-00255

A CONSISTENT TEMPERATURE GRADIENT ACROSS AN ELECTRONIC DISPLAY	International, Inc.	
SYSTEM AND METHOD FOR REMOTELY MONITORING THE OPERATING LIFE OF ELECTRONIC DISPLAYS	Manufacturing Resources International, Inc.	12/986,787
HEAT EXCHANGER FOR BACK TO BACK ELECTRONIC DISPLAYS	Manufacturing Resources International, Inc.	14/702,443
SYSTEM FOR REDUCING THE THERMAL INERTIA OF AN ELECTRONIC DISPLAY	Manufacturing Resources International, Inc.	14/253,543
SYSTEM FOR COOLING AN ELECTRONIC IMAGE ASSEMBLY WITH A HEAT EXCHANGER HAVING INTERNAL FANS	Manufacturing Resources International, Inc.	14/475,173
SYSTEM FOR COOLING AN ELECTRONIC IMAGE ASSEMBLY WITH CIRCULATING GAS AND AMBIENT GAS	Manufacturing Resources International, Inc.	14/664,213
SYSTEM FOR THERMALLY CONTROLLING AN ELECTRONIC DISPLAY WITH REDUCED NOISE EMISSIONS	Manufacturing Resources International, Inc.	14/457,611
EXPANDED HEAT SINK FOR ELECTRONIC DISPLAYS AND METHOD OF PRODUCING THE SAME	Manufacturing Resources International, Inc.	13/206,596
MODULAR SYSTEM FOR CONTROLLING A LIQUID CRYSTAL DISPLAY	Manufacturing Resources International, Inc.	13/045,272
SYSTEM AND METHOD FOR DYNAMIC LOAD SHARING BETWEEN ELECTRONIC DISPLAYS	Manufacturing Resources International, Inc.	13/361,305
SYSTEM AND METHOD FOR ENVIRONMENTAL ADAPTATION OF DISPLAY CHARACTERISTICS	Manufacturing Resources International, Inc.	14/346,884
OPTICALLY ISOLATED CAVITY FOR LIGHT SENSOR FEEDBACK IN LCD	Manufacturing Resources International, Inc.	13/707,762
TRANSPARENT LIQUID CRYSTAL DISPLAY ON DISPLAY CASE	Manufacturing Resources International, Inc.	13/649,764
APPARATUS AND METHOD FOR ASSEMBLING LARGE ELECTRONIC DISPLAYS	Manufacturing Resources International, Inc.	13/858,426
WIRE PASS THROUGH DEVICE	Manufacturing Resources International, Inc.	14/746,271
BACK PAN COOLING ASSEMBLY FOR ELECTRONIC DISPLAY	Manufacturing Resources International, Inc.	14/055,499
RIGID LCD ASSEMBLY	Manufacturing Resources International, Inc.	14/192,130
GLASS ASSEMBLY ON MONITOR ARRAY	Manufacturing Resources International, Inc.	14/192,435
HEAT EXCHANGER ASSEMBLY FOR AN ELECTRONIC DISPLAY	Manufacturing Resources International, Inc.	14/198,141

SEC et al. v. MRI
SEC Exhibit 1020.0289
IPR2023-00255

COOLING ASSEMBLY FOR AN ELECTRONIC DISPLAY	Manufacturing Resources International, Inc.	14/201,221
AIRGUIDE BACKLIGHT ASSEMBLY	Manufacturing Resources International, Inc.	14/322,962
FIGURE EIGHT CLOSED LOOP COOLING SYSTEM FOR ELECTRONIC DISPLAY	Manufacturing Resources International, Inc.	14/326,059
EXPANDABLE LIGHT GUIDE FOR BACKLIGHT	Manufacturing Resources International, Inc.	14/558,326
HYBRID REAR COVER AND MOUNTING BRACKET FOR ELECTRONIC DISPLAY	Manufacturing Resources International, Inc.	14/645,076
LIGHTING SYSTEM FOR TRANSPARENT LIQUID CRYSTAL DISPLAY	Manufacturing Resources International, Inc.	14/230,765
ROD AS A LENS ELEMENT FOR LIGHT EMITTING DIODES	Manufacturing Resources International, Inc.	14/689,939
BACK TO BACK ELECTRONIC DISPLAY ASSEMBLY	Manufacturing Resources International, Inc.	14/700,519
SEALED TRANSPARENT LIQUID CRYSTAL DISPLAY ASSEMBLY	Manufacturing Resources International, Inc.	14/740,581
LED ASSEMBLY FOR TRANSPARENT LIQUID CRYSTAL DISPLAY	Manufacturing Resources International, Inc.	14/740,746
WIRELESS VIDEO TRANSMISSION SYSTEM FOR LIQUID CRYSTAL DISPLAY	Manufacturing Resources International, Inc.	14/741,118
COOLING SYSTEM FOR LIQUID CRYSTAL DISPLAY	Manufacturing Resources International, Inc.	14/740,865
SYSTEM FOR TRACKING AND ANALYZING DISPLAY CASE USAGE	Manufacturing Resources International, Inc.	14/740,997
ADVANCED COOLING SYSTEM FOR ELECTRONIC DISPLAY	Manufacturing Resources International, Inc.	14/590,542
SUSPENDED ELECTRONIC DISPLAY AND COOLING ASSEMBLY	Manufacturing Resources International, Inc.	14/553,086
SYSTEM FOR DECREASING ENERGY USAGE OF A TRANSPARENT LCD DISPLAY CASE	Manufacturing Resources International, Inc.	62/061,950
PERIMETER VENTILATION SYSTEM FOR ELECTRONIC DISPLAY	Manufacturing Resources International, Inc.	14/624,268
LED ASSEMBLY FOR TRANSPARENT LIQUID CRYSTAL DISPLAY AND STATIC GRAPHIC	Manufacturing Resources International, Inc.	62/061,512
Optical Assembly for Transparent LCD Display Case (aka Beverage Cooler Display with Additional Linear Polarizer)	Manufacturing Resources International, Inc.	62/055,255
SYSTEM AND METHOD FOR PREVENTING DAMAGE TO PRODUCTS	Manufacturing Resources International, Inc.	62/064,304
MONOLITHIC DISPLAY WITH SEPARATELY CONTROLLABLE SECTIONS	Manufacturing Resources International, Inc.	62/140,164
SMART ELECTRONIC DISPLAY FOR RESTAURANTS	Manufacturing Resources International, Inc.	62/162,420
DISPLAY BRIGHTNESS CONTROL BASED ON	Manufacturing Resources	62/161,673

SEC et al. v. MRI
SEC Exhibit 1020.0290
IPR2023-00255

LOCATION DATA	International, Inc.	
SYSTEM AND METHOD FOR TRANSFERRING CONTENT BETWEEN DISPLAYS	Manufacturing Resources International, Inc.	62/167,115
SYSTEM AND METHOD FOR BLENDING ORDER CONFIRMATION OVER MENU BOARD BACKGROUND	Manufacturing Resources International, Inc.	62/171,323
SYSTEM AND METHOD FOR BLENDING ORDER CONFIRMATION OVER MENU BOARD BACKGROUND	Manufacturing Resources International, Inc.	62/183,808

SEC et al. v. MRI
SEC Exhibit 1020.0291
IPR2023-00255

Current Foreign Patent Applications

Name	Record Owner	Application No.
SYSTEM AND METHOD FOR CONTROLLING THE OPERATION PARAMETERS OF A DISPLAY IN RESPONSE TO CURRENT DRAW	Manufacturing Resources International, Inc.	Australia 2010218083
FIELD SERVICEABLE ELECTRONIC DISPLAY	Manufacturing Resources International, Inc.	Australia 2010319888
SYSTEM FOR COOLING AN ELECTRONIC IMAGE ASSEMBLY	Manufacturing Resources International, Inc.	Australia 2011248190
DISPLAY CASE WITH TRANSPARENT LIQUID CRYSTAL DISPLAY AND LIGHTING SYSTEM FOR SAME	Manufacturing Resources International, Inc.	Australia 2012322040
SYSTEM AND METHOD FOR THERMALLY CONTROLLING AN ELECTRONIC DISPLAY	Manufacturing Resources International, Inc.	Brazil P10820231-1
FIELD SERVICEABLE ELECTRONIC DISPLAY	Manufacturing Resources International, Inc.	Brazil 1120120121669
DISPLAY CASE WITH TRANSPARENT LIQUID CRYSTAL DISPLAY AND LIGHTING SYSTEM FOR SAME	Manufacturing Resources International, Inc.	Brazil BR1120140089990
SYSTEM AND METHOD FOR THERMALLY CONTROLLING AN ELECTRONIC DISPLAY	Manufacturing Resources International, Inc.	Canada 2,705,814
ELECTRONIC DISPLAY WITH MOUNT-ACCESSIBLE COMPONENTS	Manufacturing Resources International, Inc.	Canada 2,749,532
SYSTEM AND METHOD FOR CONTROLLING THE OPERATION PARAMETERS OF A DISPLAY IN RESPONSE TO CURRENT DRAW	Manufacturing Resources International, Inc.	Canada 2,754,371
FIELD SERVICEABLE ELECTRONIC DISPLAY	Manufacturing Resources International, Inc.	Canada 2,780,884
APPARATUS AND METHOD FOR REDUCING THE THERMAL INERTIA OF AN ELECTRONIC DISPLAY	Manufacturing Resources International, Inc.	Canada 2,800,601

SEC et al. v. MRI
SEC Exhibit 1020.0292
IPR2023-00255

SYSTEM FOR COOLING AN ELECTRONIC IMAGE ASSEMBLY	Manufacturing Resources International, Inc.	Canada 2,798,277
SYSTEM AND METHOD FOR THERMALLY CONTROLLING AN ELECTRONIC DISPLAY WITH REDUCED NOISE EMISSIONS	Manufacturing Resources International, Inc.	Canada 2,809,019
SYSTEM FOR COOLING AN ELECTRONIC IMAGE ASSEMBLY	Manufacturing Resources International, Inc.	Canada 2,808,159
SYSTEM AND METHOD FOR ENVIRONMENTAL ADAPTATION OF DISPLAY CHARACTERISTICS	Manufacturing Resources International, Inc.	Canada 2,849,902
DISPLAY CASE WITH TRANSPARENT LIQUID CRYSTAL DISPLAY AND LIGHTING SYSTEM FOR SAME	Manufacturing Resources International, Inc.	Canada 2,852,061
BACK PAN COOLING ASSEMBLY FOR ELECTRONIC DISPLAY	Manufacturing Resources International, Inc.	Canada 2,888,494
DISPLAY CASE WITH TRANSPARENT LIQUID CRYSTAL DISPLAY AND LIGHTING SYSTEM FOR SAME	Manufacturing Resources International, Inc.	China P.R. 201280061436.0
SYSTEM AND METHOD FOR CONTROLLING THE OPERATION PARAMETERS OF A DISPLAY IN RESPONSE TO CURRENT DRAW	Manufacturing Resources International, Inc.	European Patent Convention 10746758.1
FIELD SERVICEABLE ELECTRONIC DISPLAY	Manufacturing Resources International, Inc.	European Patent Convention 10830484.1
APPARATUS AND METHOD FOR REDUCING THE THERMAL INERTIA OF AN ELECTRONIC DISPLAY	Manufacturing Resources International, Inc.	European Patent Convention 11787341.4
SYSTEM FOR COOLING AN ELECTRONIC IMAGE ASSEMBLY	Manufacturing Resources International, Inc.	European Patent Convention 11778238.3-1228
SYSTEM AND METHOD FOR ENVIRONMENTAL ADAPTATION OF DISPLAY CHARACTERISTICS	Manufacturing Resources International, Inc.	European Patent Convention 12833421.6
DISPLAY CASE WITH TRANSPARENT LIQUID CRYSTAL DISPLAY AND LIGHTING SYSTEM FOR SAME	Manufacturing Resources International, Inc.	European Patent Convention 12840353.2
BACK PAN COOLING ASSEMBLY FOR ELECTRONIC DISPLAY	Manufacturing Resources International, Inc.	European Patent Convention 13/361,305

SEC et al. v. MRI
SEC Exhibit 1020.0293
IPR2023-00255

DISPLAY CASE WITH TRANSPARENT LIQUID CRYSTAL DISPLAY AND LIGHTING SYSTEM FOR SAME	Manufacturing Resources International, Inc.	India 3837/DELNP/2014
SYSTEM AND METHOD FOR CONTROLLING THE OPERATION PARAMETERS OF A DISPLAY IN RESPONSE TO CURRENT DRAW	Manufacturing Resources International, Inc.	Israel 214816
SYSTEM FOR COOLING AN ELECTRONIC IMAGE ASSEMBLY	Manufacturing Resources International, Inc.	Japan 2013-509207
DISPLAY CASE WITH TRANSPARENT LIQUID CRYSTAL DISPLAY AND LIGHTING SYSTEM FOR SAME	Manufacturing Resources International, Inc.	Japan 2014-535945
RIGID LCD ASSEMBLY	Manufacturing Resources International, Inc.	PCT/US14/18984
GLASS ASSEMBLY ON MONITOR ARRAY	Manufacturing Resources International, Inc.	PCT/US14/19068
HEAT EXCHANGER ASSEMBLY FOR AN ELECTRONIC DISPLAY	Manufacturing Resources International, Inc.	PCT/US14/20850
COOLING ASSEMBLY FOR AN ELECTRONIC DISPLAY	Manufacturing Resources International, Inc.	PCT/US14/21945
AIRGUIDE BACKLIGHT ASSEMBLY	Manufacturing Resources International, Inc.	PCT/US14/45405
FIGURE EIGHT CLOSED LOOP COOLING SYSTEM FOR ELECTRONIC DISPLAY	Manufacturing Resources International, Inc.	PCT/US14/45766
HYBRID REAR COVER AND MOUNTING BRACKET FOR ELECTRONIC DISPLAY	Manufacturing Resources International, Inc.	PCT/US15/19975
BACK TO BACK ELECTRONIC DISPLAY ASSEMBLY	Manufacturing Resources International, Inc.	PCT/US15/28461
TRANSPARENT LCD ASSEMBLY WITH DISPLAY CASE	Manufacturing Resources International, Inc.	PCT/US15/36056
SYSTEM AND METHOD FOR THERMALLY CONTROLLING AN ELECTRONIC DISPLAY	Manufacturing Resources International, Inc.	Republic of Korea 10-2010-7013306

SEC et al. v. MRI
SEC Exhibit 1020.0294
IPR2023-00255

SYSTEM AND METHOD FOR CONTROLLING THE OPERATION PARAMETERS OF A DISPLAY IN RESPONSE TO CURRENT DRAW	Manufacturing Resources International, Inc.	Republic of Korea 10-2011-7022221
DYNAMIC DIMMING LED BACKLIGHT	Manufacturing Resources International, Inc.	Republic of Korea 10-2011-7030760
SYSTEM FOR COOLING AN ELECTRONIC IMAGE ASSEMBLY	Manufacturing Resources International, Inc.	Republic of Korea 10-2012-7031800
SYSTEM AND METHOD FOR THERMALLY CONTROLLING AN ELECTRONIC DISPLAY WITH REDUCED NOISE EMISSIONS	Manufacturing Resources International, Inc.	Republic of Korea 10-2013-7006361
SYSTEM AND METHOD FOR ENVIRONMENTAL ADAPTATION OF DISPLAY CHARACTERISTICS	Manufacturing Resources International, Inc.	Republic of Korea 10-2014-7010961
DISPLAY CASE WITH TRANSPARENT LIQUID CRYSTAL DISPLAY AND LIGHTING SYSTEM FOR SAME	Manufacturing Resources International, Inc.	Republic of Korea 10-2014-7012857
BACK PAN COOLING ASSEMBLY FOR ELECTRONIC DISPLAY	Manufacturing Resources International, Inc.	Republic of Korea 10-2015-7012613

SEC et al. v. MRI
SEC Exhibit 1020.0295
IPR2023-00255

AO 120 (Rev. 08/10)

TO:	Mail Stop 8 Director of the U.S. Patent and Trademark Office P.O. Box 1450 Alexandria, VA 22313-1450	REPORT ON THE FILING OR DETERMINATION OF AN ACTION REGARDING A PATENT OR TRADEMARK

In Compliance with 35 U.S.C. § 290 and/or 15 U.S.C. § 1116 you are hereby advised that a court action has been filed in the U.S. District Court District of Delaware on the following

☐ Trademarks or ☑ Patents. (☐ the patent action involves 35 U.S.C. § 292.):

DOCKET NO.	DATE FILED	U.S. DISTRICT COURT
	3/14/2017	District of Delaware

PLAINTIFF	DEFENDANT
Manufacturing Resources International, Inc.	Civiq Smartscapes, LLC, et al.

PATENT OR TRADEMARK NO.	DATE OF PATENT OR TRADEMARK	HOLDER OF PATENT OR TRADEMARK
1 8,854,595	10/7/2014	Manufacturing Resources International, Inc.
2 9,173,322	10/27/2015	Manufacturing Resources International, Inc.
3 8,767,165	7/1/2014	Manufacturing Resources International, Inc.
4 8,274,622	9/25/2012	Manufacturing Resources International, Inc.
5 See attached		

In the above—entitled case, the following patent(s)/ trademark(s) have been included:

DATE INCLUDED	INCLUDED BY ☐ Amendment ☐ Answer ☐ Cross Bill ☐ Other Pleading	
PATENT OR TRADEMARK NO.	DATE OF PATENT OR TRADEMARK	HOLDER OF PATENT OR TRADEMARK
1		
2		
3		
4		
5		

In the above—entitled case, the following decision has been rendered or judgement issued:

DECISION/JUDGEMENT

CLERK	(BY) DEPUTY CLERK	DATE

Copy 1—Upon initiation of action, mail this copy to Director Copy 3—Upon termination of action, mail this copy to Director
Copy 2—Upon filing document adding patent(s), mail this copy to Director Copy 4—Case file copy

CONTINUATION SHEET

PATENTS

PATENT OR TRADEMARK NO.	DATE OF PATENT OR TRADEMARK	HOLDER OF PATENT OR TRADEMARK
5. 8,482,695	7/9/2013	Manufacturing Resources International, Inc.
6. 8,854,572	10/7/2014	Manufacturing Resources International, Inc.
7. 9,089,079	7/21/2015	Manufacturing Resources International, Inc.
8. 8,373,841	2/12/2013	Manufacturing Resources International, Inc.
9. 8,351,014	1/8/2013	Manufacturing Resources International, Inc.
10. 9,030,129	5/12/2015	Manufacturing Resources International, Inc.
11. 9,167,655	10/20/2015	Manufacturing Resources International, Inc.
12. 8,125,163	2/28/2012	Manufacturing Resources International, Inc.
13. 8,829,815	9/9/2014	Manufacturing Resources International, Inc.
14. 9,313,917	4/12/2016	Manufacturing Resources International, Inc.
15. 8,497,972	7/30/2013	Manufacturing Resources International, Inc.
16. 8,016,452	9/13/2011	Manufacturing Resources International, Inc.
17. 9,448,569	9/20/2016	Manufacturing Resources International, Inc.