Table 3.2 Thermal Conductivity of Various Materials [18–23]

Material (room temperature)	English Units $\left(\frac{\text{Btu}}{\text{hr ft °F}}\right)$	Metric Units $\left(\frac{\text{cal}}{\text{sec cm °C}}\right)$
	Metal	
Aluminum		
Pure	125	0.52
5052	83	0.34
6061 T6	90	0.37
2024 T4	70	0.29
7075 T6	70	0.29
356 T6	87	0.36
Beryllium	95	0.39
Beryllium copper	50	0.21
Copper		
Pure	230	0.95
Drawn wire	166	0.68
Bronze	130	0.54
Red brass	64	0.26
Yellow brass	54	0.22
5% phosphor bronze	30	0.12
Gold	170	0.70
Iron		
Wrought	34	0.14
Cast	32	0.13
Kovar	9	0.037
Lead	19	0.078
Magnesium		
Pure	92	0.38
Cast	41	0.17
Molybdenum	75	0.31
Nickel		
Pure	46	0.19
Inconel	10	0.041
Monel	15	0.062
Silver	242	1.00
Steel		
SAE 1010	34	0.14
1020	32	0.13
1045	26	0.11
4130	24	0.10
Tin	36	0.15
Titanium	9	0.037
Zinc	59	0.24

SEC et al. v. MRI
SEC Exhibit 1027.0051
IPR2023-00255

Table 3.2 (Continued)

Material (room temperature)	English Units $\left(\frac{\text{Btu}}{\text{hr ft °F}}\right)$	Metric Units $\left(\frac{\text{cal}}{\text{sec cm °C}}\right)$
	Nonmetal	
Air	0.0153	0.000063
Alumina	17.0	0.070
Bakelite	0.11	0.00045
Beryllia (99.5%)	114.	0.47
Carbon	4.0	0.016
Epoxy		
No fill	0.12	0.00049
High fill	1.25	0.0051
Epoxy fiberglass	0.15	0.00062
Multilayer 0.005 in epoxy lamina with 0.0028 copper runs parallel to plane	20.	0.083
Perpendicular to plane (with plated throughholes)	2.	0.0082
Glass	0.50	0.0021
Glass wool	0.023	0.00009
Ice	1.23	0.0051
Mica	0.41	0.0017
Mylar	0.11	0.00045
Nylon	0.14	0.00058
Phenolic		
Plain	0.30	0.0012
Paper base	0.16	0.00066
Plexiglass	0.11	0.00045
Polystyrene	0.061	0.00025
Polyvinyl chloride	0.09	0.00037
Pyrex	0.73	0.0030
Rubber		
Butyl	0.15	0.00062
Hard	0.11	0.00045
Soft	0.08	0.00033
Silicone grease	0.12	0.00049
Silicone rubber	0.11	0.00045
Styrofoam	0.02	0.00008
Teflon	0.11	0.00045
Water	0.38	0.0016
Wood		
Maple	0.096	0.00039
Pine	0.067	0.00027

SEC et al. v. MRI
SEC Exhibit 1027.0052
IPR2023-00255

3.3 SAMPLE PROBLEM—TRANSISTOR MOUNTED ON A BRACKET

Determine the mounting surface temperature on the case of a transistor that is bolted to an aluminum bracket (5052 aluminum) as shown in Figure 3.1. The bracket is cemented to a heat sink wall, which is maintained at a temperature of 131°F (55°C). The transistor has a mica insulator at the mounting interface and the power dissipation is 7.5 watts. Radiation and convection heat transfer from the assembly are small and can be ignored.

SOLUTION

The heat transfer path from the transistor to the heat sink wall is broken into three parts, and each part is examined separately, using Eq. 3.1 written in a slightly different form, as shown in Eq. 3.2. The solution is shown in English units and metric units.

$$\Delta t = \frac{QL}{KA} \tag{3.2}$$

Part 1. Temperature Rise across Cemented Interface

Given Q = concentrated heat load of 7.5 watts
Q = 25.6 Btu/hr = 1.79 cal/sec (ref. Table 1.1)
L = thickness of cemented interface
L = 0.010 in = 0.000833 ft = 0.0254 cm
K = thermal conductivity epoxy cement (ref. Table 3.2)
K = 0.167 Btu/hr ft °F = 0.000689 cal/sec cm °C (ref. Table 1.2)
A = cross section area along heat flow path
A = (1.3)(0.75) = 0.975 in² = 0.00677 ft² = 6.29 cm²

Substitute into Eq. 3.2 using English units.

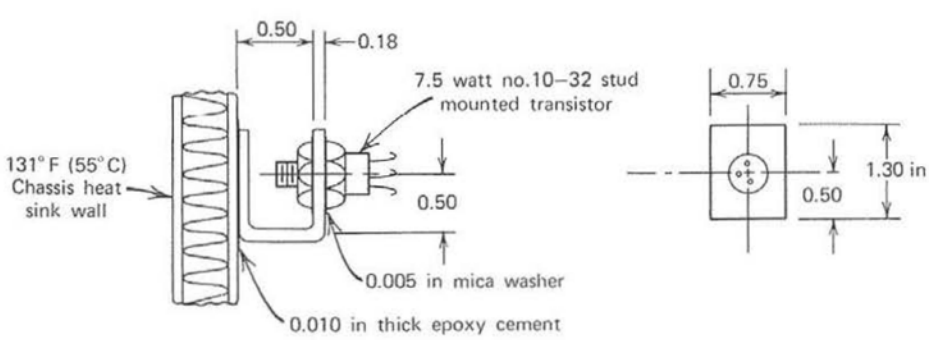

Figure 3.1 Transistor mounted on a bracket.

$$\Delta t_1 = \frac{(25.6\ \text{Btu/hr})(0.000833\ \text{ft})}{(0.167\ \text{Btu/hr ft °F})(0.00677\ \text{ft}^2)} = 18.9°\text{F} \tag{3.3}$$

Substitute into Eq. 3.2 using metric units.

$$\Delta t_1 = \frac{(1.79\ \text{cal/sec})(0.0254\ \text{cm})}{(0.000689\ \text{cal/sec cm °C})(6.29\ \text{cm}^2)} = 10.5°\text{C} \tag{3.3a}$$

Part 2. Temperature Rise along the Aluminum Bracket

Given Q = 7.5 watts = 25.6 Btu/hr = 1.79 cal/sec
L = length of bracket from center of cemented face to center of transistor mount
L = 0.50 + 0.50 + 0.50 = 1.5 in = 0.125 ft = 3.81 cm
K = thermal conductivity 5052 aluminum bracket (ref. Table 3.2)
K = 83 Btu/hr ft °F = 0.343 cal/sec cm °C
A = cross section area of bracket
A = (0.75)(0.18) = 0.135 in² = 0.000937 ft² = 0.871 cm²

Substitute into Eq. 3.2 using English units.

$$\Delta t_2 = \frac{(25.6)(0.125)}{(83)(0.000937)} = 41.1°\text{F} \tag{3.4}$$

Substitute into Eq. 3.2 using metric units.

$$\Delta t_2 = \frac{(1.79)(3.81)}{(0.343)(0.871)} = 22.8°\text{C} \tag{3.4a}$$

Part 3. Temperature Rise across Mica Insulator (Ref. Table 3.3)

Given Q = 7.5 watts (3.5)
R = 2.4 °C/watt (10–32 stud; ref. Table 3.3)
Δt_3 = (7.5 watts) (2.4 °C/watt)
Δt_3 = 18°C = 32.4°F

The mounting surface temperature of the transistor is determined from the chassis wall temperature plus the temperature rises along the heat flow path.

$$t_{\text{trans}} = t_{\text{surf}} + \Delta t_1 + \Delta t_2 + \Delta t_3$$

In English units, the transistor temperature is

$$t_{\text{trans}} = 131 + 18.9 + 41.1 + 32.4 = 223.4°\text{F} \tag{3.6}$$

SEC et al. v. MRI
SEC Exhibit 1027.0054
IPR2023-00255

Table 3.3 Thermal Resistance R across Interface from Case to Sink for Stud Mounted Transistors and Diodes

Stud Size	Hex Size across Flats	Dry	With Thermal Grease	Across Mica Washer 0.005 in (0.0127 cm)
10–32	$\frac{7}{16}$ in	$0.60 \frac{°C}{watt}$	$0.40 \frac{°C}{watt}$	$2.4 \frac{°C}{watt}$
$\frac{1}{4}$–28	$\frac{9}{16}$ in	$0.45 \frac{°C}{watt}$	$0.30 \frac{°C}{watt}$	$2.0 \frac{°C}{watt}$

In metric units, the transistor temperature is

$$t_{trans} = 55 + 10.5 + 22.8 + 18.0 = 106.3°C \tag{3.6a}$$

3.4 UNIFORMLY DISTRIBUTED HEAT SOURCES, STEADY STATE CONDUCTION

Identical electronic components are often placed next to one another, on mounting brackets or on circuit boards, as shown in Figure 3.2. When each component dissipates approximately the same amount of power, the result will be a uniformly distributed heat load.

When any one strip of electronic components is considered, as shown in

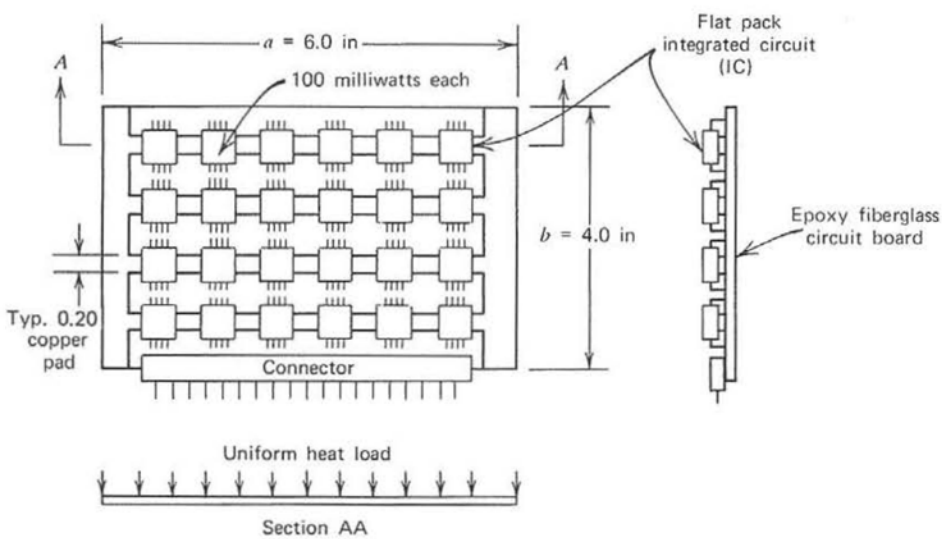

Figure 3.2 Printed circuit board with flat pack integrated circuits.

section AA, the heat input can be evaluated as a uniformly distributed heat load. On a typical printed circuit board (PCB), the heat will flow from the component to the heat sink strip under the component, and then to the outer edges of the PCB, where it is removed. The heat sink strip is usually made of copper or aluminum, which have high thermal conductivity. The maximum temperature will occur at the center of the PCB and the minimum temperature will occur at the edges. This produces a parabolic temperature distribution, as shown in Figure 3.3.

When only one side of one strip is considered, a heat balance equation can be obtained by considering a small element dx of the strip, along the span with a length of L. Then

$$dQ_1 + dQ_2 = dQ_3$$

where $dQ_1 = q\,dx$ = heat input

$$dQ_2 = -KA\frac{dt}{dx} = \text{heat flow}$$

$$dQ_3 = KA\frac{d}{dx}(t + dt) = \text{total heat}$$

Then

$$q\,dx - KA\frac{dt}{dx} = -KA\frac{dt}{dx} - KA\frac{d}{dx}(dt)$$

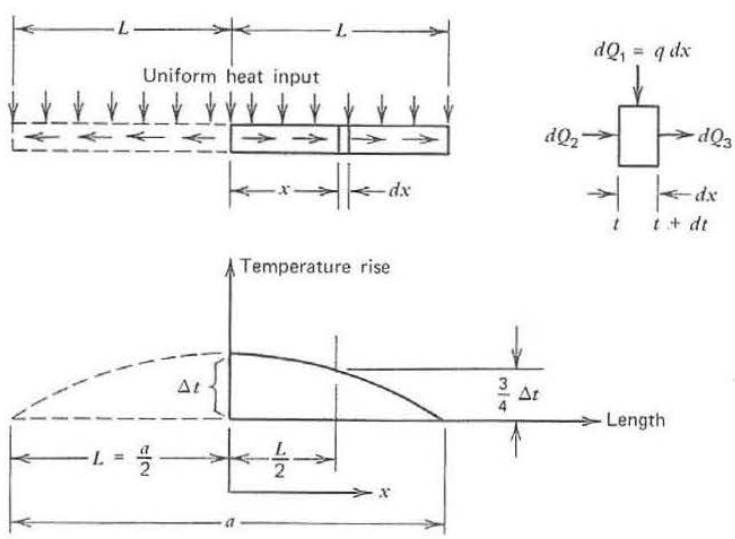

Figure 3.3 Parabolic temperature distribution for uniform heat load on a circuit board.

or

$$\frac{d^2t}{dx^2} = -\frac{q}{KA}$$

This is a second order differential equation, which can be solved by integrating twice. Integrating once yields

$$\frac{dt}{dx} = -\frac{qx}{KA} + C_1$$

Integrating twice yields

$$t = -\frac{qx^2}{2KA} + C_1x + C_2$$

The constant C_1 is zero because at $x = 0$, the plate is adiabatic and no heat is lost. The slope of the temperature gradient is therefore zero.

The constant C_2 is determined by letting the temperature at the end of the plate be t_e; then

$$C_2 = t_e + \frac{qL^2}{2KA}$$

The temperature at any point along the plate (or strip) is

$$t = -\frac{qx^2}{2KA} + t_e + \frac{qL^2}{2KA}$$

Let the temperature at the center of the plate be t_0; then

$$t_0 - t_e = \frac{q}{2KA}(L^2 - x^2)$$

When $t_0 - t_e$ is represented as Δt,

$$\Delta t = \frac{q}{2KA}(L^2 - x^2) \tag{3.7}$$

This equation produces the parabolic shape for the temperature distribution, which is shown in Figure 3.3

When the full length of the strip is considered, the value of x in Eq. 3.7 is zero. The total heat flow along the length L then becomes

$$Q = qL \tag{3.8}$$

SEC et al. v. MRI
SEC Exhibit 1027.0057
IPR2023-00255

Substitute Eq. 3.8 into Eq. 3.7 when $x = 0$. This results in the equation for the maximum temperature rise in a strip with a uniformly distributed heat load.

$$\Delta t = \frac{QL}{2KA} \tag{3.9}$$

When the temperature rise at the midpoint along the heat sink strip of length L is desired, then $x = L/2$. Substituting this value into Eq. 3.7 will result in the temperature rise at the midpoint of the strip:

$$\text{midpoint } \Delta t = \frac{3QL}{8KA} \tag{3.10}$$

Considering only the strip with a length of L, the ratio of the strip midpoint temperature rise to the maximum temperature rise is shown in the following relation:

$$\frac{\text{midpoint } \Delta t}{\text{maximum } \Delta t} = \frac{3QL/8KA}{QL/2KA} = \frac{3}{4} \tag{3.11}$$

3.5 SAMPLE PROBLEM—COOLING INTEGRATED CIRCUITS ON A PCB

A series of flat pack integrated circuits are to be mounted on a multilayer printed circuit board (PCB) as shown in Figure 3.2. Each flat pack dissipates 100 milliwatts of power. Heat from the components is to be removed by conduction through the printed circuit copper pads, which have 2 ounces of copper [thickness is 0.0028 in (0.0071 cm)]. The heat must be conducted to the edges of the PCB, where it flows into a heat sink. Determine the temperature rise from the center of the PCB to the edge to see if the design will be satisfactory.

SOLUTION

The flat packs generate a uniformly distributed heat load, which results in the parabolic temperature distribution shown in Figure 3.4. Because of symmetry, only one half of the system is evaluated. Equation 3.9 is used to determine the temperature rise from the center of the PCB to the edge for one strip of components, using English units and metric units.

SEC et al. v. MRI
SEC Exhibit 1027.0058
IPR2023-00255

Given $Q = 3(0.10) = 0.30$ watt heat input, one half strip
$Q = 1.02$ Btu/hr $= 0.0717$ cal/sec (ref. Table 1.1)
$L = 3.0$ in $= 0.25$ ft $= 7.62$ cm (length)
$K = 166$ Btu/hr ft °F $= 0.685$ cal/sec cm °C (Thermal conductivity of copper)
$A = (0.20)(0.0028) = 0.00056$ in^2 (cross section area)
$A = 3.89 \times 10^{-6}$ ft$^2 = 0.00361$ cm^2

Substitute into Eq. 3.9 to obtain the temperature rise along the strip using English units.

$$\Delta t = \frac{(1.02)(0.25\,\text{ft})}{(2)(166)(3.89 \times 10^{-6}\,\text{ft}^2)} = 197°\text{F} \tag{3.12}$$

Substitute into Eq. 3.9 using metric units.

$$\Delta t = \frac{(0.0717)(7.62\,\text{cm})}{(2)(0.685)(0.00361\,\text{cm}^2)} = 110°\text{C} \tag{3.12a}$$

The amount of heat that can be removed by radiation or convection for this type of system is very small. The temperature rise is therefore too high. By the time the sink temperature is added, assuming that it is 80°F, the case temperature on the component will be 277°F. Since the typical maximum allowable case temperature is about 212°F, the design is not acceptable.

If the copper thickness is doubled to 4 ounces, which has a thickness of 0.0056 in (0.014 cm), the temperature rise will be 98.5°F (55°C), which is still too high for any sink greater than about 115°F (46°C). For high temperature applications, the copper thickness will have to be increased to about 0.0112 in (0.0284 cm) for a good design.

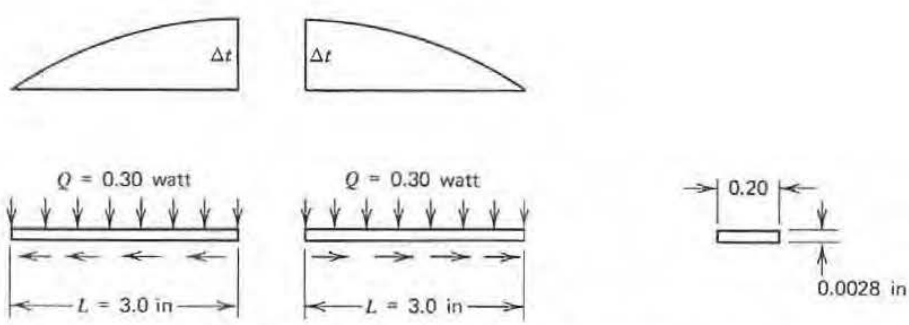

Figure 3.4 Uniformly distributed heat load on one copper strip.

3.6 CIRCUIT BOARD WITH AN ALUMINUM HEAT SINK CORE

Another method is often used for fabricating PCBs that will have a good conduction heat flow path. A thin circuit lamina is cemented to an aluminum plate, and flat pack integrated components are lap soldered to the lamina. Laminas can be cemented to both sides of the aluminum plate, so that both sides of the plate can be populated with integrated circuit components, as shown in Figure 3.5.

Twice as many integrated circuits can be mounted on this type of PCB. This means the total power dissipation will be twice that of a PCB which has components on one side only. If all the components have about the same power dissipation, a uniform heat load will be produced, so that the temperature rise distribution will still be parabolic, as shown in Figure 3.3.

3.7 SAMPLE PROBLEM—TEMPERATURE RISE ALONG A PCB HEAT SINK PLATE

Determine the temperature rise from the center of the aluminum heat sink plate to the side edges for the conductively cooled PCB shown in Figure 3.5. The heat flow path from the center of the heat sink to the side edges is shown in Figure 3.6. Components are mounted on both sides of the board, which results in a power dissipation of 2.4 watts per side, or a total power dissipation of 4.8 watts for the complete PCB.

SOLUTION

The temperature rise along the heat sink plate is determined from Eq. 3.9 considering English units and metric units.

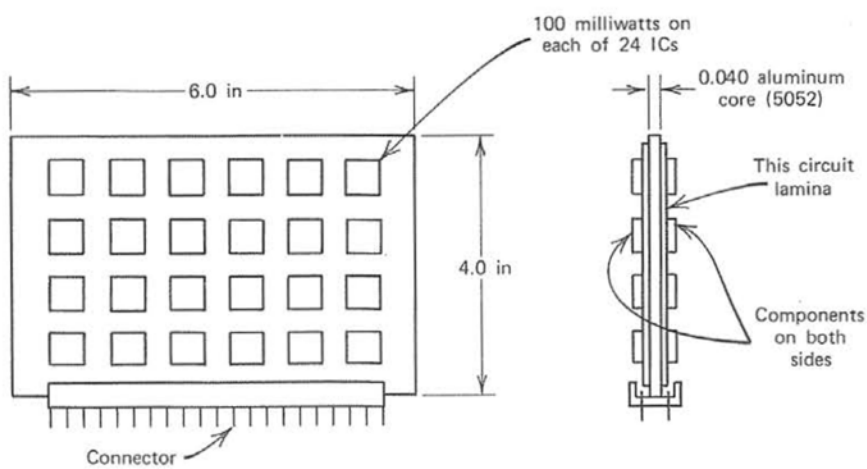

Figure 3.5 Circuit board with aluminum core for good heat conduction.

SEC et al. v. MRI
SEC Exhibit 1027.0060
IPR2023-00255

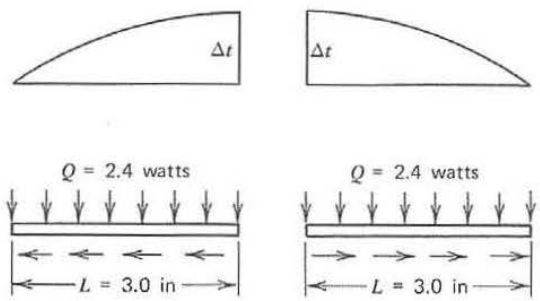

Figure 3.6 Uniformly distributed heat load on an aluminum board core.

Given $Q = 2.4$ watts $= 8.19$ Btu/hr $= 0.574$ cal/sec (ref. Table 1.1)
$L = 3.0$ in $= 0.25$ ft $= 7.62$ cm (heat sink length)
$K = 83$ Btu/hr ft °F $= 0.343$ cal/sec cm °C [aluminum (5052) conductivity]
$A = (0.04)(4.0) = 0.16$ in^2
$A = 0.00111$ ft$^2 = 1.032$ cm^2 (cross section area)

Substitute the English units into Eq. 3.9.

$$\Delta t = \frac{(8.19)(0.25)}{(2)(83)(0.00111)} = 11.1°\text{F} \tag{3.13}$$

Substitute the metric units into Eq. 3.9.

$$\Delta t = \frac{(0.574)(7.62)}{(2)(0.343)(1.032)} = 6.2°\text{C} \tag{3.13a}$$

Note that these results do *not* include the temperature rise across the thin circuit lamina. The results are only for the aluminum heat sink plate.

With such a small temperature rise, this type of design is well suited for high temperature applications.

3.8 HOW TO AVOID WARPING ON PCBS WITH METAL HEAT SINKS

Aluminum and copper heat sink cores on circuit boards are capable of conducting away large amounts of heat if the proper construction techniques are used. Extreme care must be used if only one thin circuit lamina is to be bonded to a metal core. Improper bonding can result in warped boards, because of the big difference in the coefficient of thermal expansion between the metal and the epoxy fiberglass lamina.

SEC et al. v. MRI
SEC Exhibit 1027.0061
IPR2023-00255

Thin sheets of prepreg are often used to bond the epoxy fiberglass printed circuit laminas to the metal heat sink plate. This requires a high temperature and a high pressure to cure the prepreg adhesive. Since aluminum and copper both have a coefficient of thermal expansion that is about double that of the epoxy fiberglass, in the plane of the PCB the metal will expand more than the epoxy at the high curing temperature. When the cured assembly is brought down to room temperature, the metal will shrink more than the epoxy, causing the bonded assembly to warp.

The warping caused by nonuniform shrinking between the metal core and the epoxy fiberglass lamina can usually be reduced or eliminated by bonding a similar part on the opposite side of the plate.

When only one side of a metal plate is to be laminated with a printed circuit, a room temperature (or slightly higher) cementing process should be used instead of the high temperature bonding process. There are many epoxy cements that have a relatively low temperature curing cycle [22, 23].

3.9 CHASSIS WITH NONUNIFORM WALL SECTIONS

Electronic chassis always seem to require cutouts, notches, and clearance holes for assembly access, wire harnesses, or maintenance. These openings will generally cut through a bulkhead or other structural member, which is required to carry heat away from some critical high power electronic component. The cutouts result in nonuniform wall sections, which must be analyzed to determine their heat flow capability.

One convenient method for analyzing nonuniform wall sections is to subdivide them into smaller units that have relatively uniform sections. The heat flow path through each of the smaller, relatively uniform sections can then be defined in terms of a thermal resistance. A specific resistance value for each section can then be determined by its geometry and physical properties. This will result in a thermal analog resistor network, or mathematical model, which describes the thermal characteristics of that structural section of the electronic system.

The basic conduction heat flow relation shown by Eq. 3.1 can be modified slightly to utilize the thermal resistance concept. The thermal resistance for conduction heat flow is then defined by Eq. 3.14 [24].

$$R = \frac{L}{KA} \tag{3.14}$$

Substituting this value into Eq. 3.1 results in the temperature rise relation when the thermal resistance concept is used, as shown in Eq. 3.15.

$$\Delta t = QR \tag{3.15}$$

SEC et al. v. MRI
SEC Exhibit 1027.0062
IPR2023-00255

Figure 3.7 Series flow resistor network.

The thermal resistance concept is very convenient for developing mathematical models of simple or complex electronic boxes. Analog resistor networks can be established for heat flow in one, two, and three dimensions with little effort. Complex shapes can often be modeled with many simple thermal resistors to provide an effective means for determining the temperature profile for almost any type of system.

Two basic resistance patterns, series and parallel, are used to generate analog resistor networks. A simple series pattern network is shown in Figure 3.7.

The total effective resistance (R_t) for the series flow network is determined by adding all the individual resistances, as shown in Eq. 3.16 [15, 17, 24].

$$R_t = R_1 + R_2 + R_3 + \cdots \tag{3.16}$$

A simple parallel flow resistor network is shown in Figure 3.8.

The total effective resistance for the parallel flow network is determined by combining the individual resistances as shown in Eq. 3.17 [15, 17, 24].

$$\frac{1}{R_t} = \frac{1}{R_1} + \frac{1}{R_2} + \frac{1}{R_3} + \cdots \tag{3.17}$$

A typical electronic system will normally consist of many different combinations of series and parallel flow resistor networks.

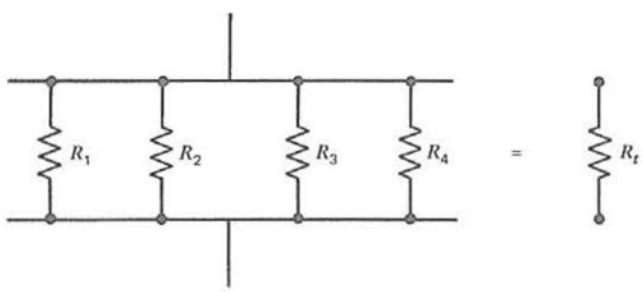

Figure 3.8 Parallel flow resistor network.

SEC et al. v. MRI
SEC Exhibit 1027.0063
IPR2023-00255

3.10 SAMPLE PROBLEM—HEAT FLOW ALONG NONUNIFORM BULKHEAD

An aluminum bulkhead is used to support a row of six power resistors. Each resistor dissipates 1.5 watts, for a total power dissipation of 9 watts. The bulkhead conducts the heat to the opposite wall of the chassis, which is cooled by a multiple fin heat exchanger. The bulkhead has two cutouts for connectors to pass through, as shown in Figure 3.9. Determine the temperature rise across the length of the bulkhead.

SOLUTION

A mathematical model with series and parallel thermal resistor networks can be established to represent the heat flow path, as shown in Figure 3.10*a*.

The thermal analog resistor network is simplified by first finding the equivalent effective single resistance for the parallel section represented by resistors R_2, R_3, and R_4 with the use of Eq. 3.17 and the geometry shown in Figure 3.9.

Determine resistor R_2:

Given $L_2 = 1.5$ in $= 0.125$ ft $= 3.81$ cm (length)

$K_2 = 83$ Btu/hr ft °F $= 0.343$ cal/sec cm °C [aluminum (5052) conductivity]

$A_2 = (0.50)(0.060) = 0.030$ in²

$A_2 = 0.000208$ ft² $= 0.194$ cm² (cross section area)

$$R_2 = \frac{0.125}{(83)(0.000208)} = 7.24\,\frac{\text{hr °F}}{\text{Btu}}\ \text{(English units)} \tag{3.18}$$

$$R_2 = \frac{3.81}{(0.343)(0.194)} = 57.3\,\frac{\text{sec °C}}{\text{cal}}\ \text{(metric units)} \tag{3.18a}$$

Determine resistor R_3:

Given $L_3 = 1.5$ in $= 0.125$ ft $= 3.81$ cm (length)

$K_3 = 83$ Btu/hr ft °F $= 0.343$ cal/sec cm °C (aluminum)

$A_3 = (1.0)(0.060) = 0.060$ in² (area)

$A_3 = 0.000417$ ft² $= 0.387$ cm²

$$R_3 = \frac{0.125}{(83(0.000417)} = 3.61\,\frac{\text{hr °F}}{\text{Btu}}\ \text{(English units)} \tag{3.19}$$

$$R_3 = \frac{3.81}{(0.343)(0.387)} = 28.7\,\frac{\text{sec °C}}{\text{cal}}\ \text{(metric units)} \tag{3.19a}$$

SEC et al. v. MRI
SEC Exhibit 1027.0064
IPR2023-00255

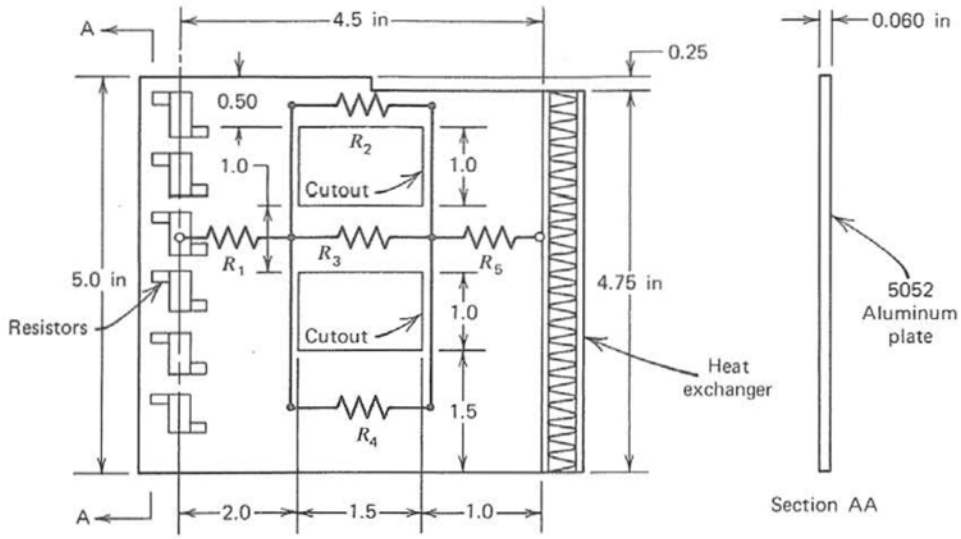

Figure 3.9 Bulkhead with two cutouts for connectors.

Determine resistor R_4:

Given $L_4 = 1.5$ in $= 0.125$ ft $= 3.81$ cm (length)

$K_4 = 83$ Btu/hr ft °F $= 0.343$ cal/sec cm °C (aluminum)

$A_4 = (1.5)(0.060) = 0.090$ in²

$A_4 = 0.000625$ ft² $= 0.581$ cm² (cross section area)

$$R_4 = \frac{0.125}{(83)(0.000625)} = 2.41\,\frac{\text{hr °F}}{\text{Btu}}\,\text{(English units)} \tag{3.20}$$

$$R_4 = \frac{3.81}{(0.341)(0.581)} = 19.1\,\frac{\text{sec °C}}{\text{cal}}\,\text{(metric units)} \tag{3.20a}$$

Resistors R_2, R_3, and R_4 are combined in parallel using Eq. 3.17, which results in resistor R_6.

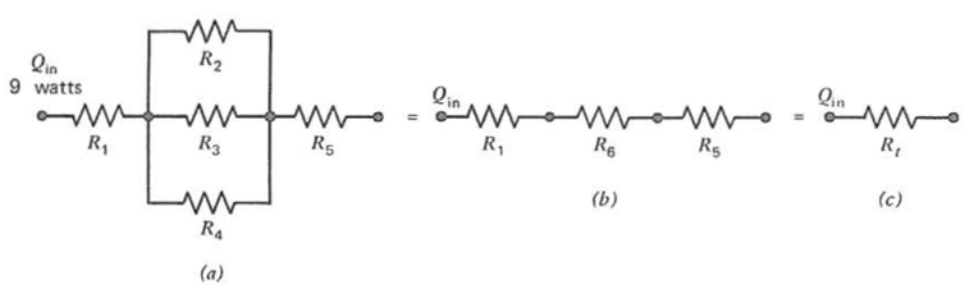

Figure 3.10 Bulkhead thermal model using a series and a parallel resistor network.

$$\frac{1}{R_6} = \frac{1}{7.24} + \frac{1}{3.61} + \frac{1}{2.41}$$

$$R_6 = 1.20 \frac{\text{hr °F}}{\text{Btu}} \text{(English units)} \tag{3.21}$$

$$\frac{1}{R_6} = \frac{1}{57.3} + \frac{1}{28.7} + \frac{1}{19.1}$$

$$R_6 = 9.56 \frac{\text{sec °C}}{\text{cal}} \text{(metric units)} \tag{3.21a}$$

The mathematical model now appears as shown in Figure 3.10*b*. This can be further reduced by considering thermal resistance R_6 to be in series with resistors R_1 and R_5. Each resistance value is determined from Eq. 3.14. The geometry for these resistors is obtained from Figure 3.9.

Determine resistor R_1:

Given $L_1 = 2.0$ in $= 0.167$ ft $= 5.08$ cm (length)
$K_1 = 83$ Btu/hr ft °F $= 0.343$ cal/sec cm °C [aluminum (5052) conductivity]
$A = (5.0)(0.060) = 0.30$ in²
$A = 0.00208$ ft² $= 1.935$ cm² (cross section area)

$$R_1 = \frac{0.167}{(83)(0.00208)} = 0.97 \frac{\text{hr °F}}{\text{Btu}} \text{(English units)} \tag{3.22}$$

$$R_1 = \frac{5.08}{(0.343)(1.935)} = 7.65 \frac{\text{sec °C}}{\text{cal}} \text{(metric units)} \tag{3.22a}$$

Determine resistor R_5:

Given $L_5 = 1.0$ in $= 0.0833$ ft $= 2.54$ cm (length)
$K_5 = 83$ Btu/hr ft °F $= 0.343$ cal/sec cm °C (aluminum)
$A_5 = (4.75)(0.060) = 0.285$ in²
$A_5 = 0.00198$ ft² $= 1.839$ cm² (cross section area)

$$R_5 = \frac{0.0833}{(83)(0.00198)} = 0.51 \frac{\text{hr °F}}{\text{Btu}} \text{(English units)} \tag{3.23}$$

$$R_5 = \frac{2.54}{(0.343)(1.839)} = 4.03 \frac{\text{sec °C}}{\text{cal}} \text{(metric units)} \tag{3.23a}$$

The values of the three resistors in Figure 3.10*b* are now known, so that Eq. 3.16 can be used to determine the total resistance of the three resistors in series.

SEC et al. v. MRI
SEC Exhibit 1027.0066
IPR2023-00255

$$R_t = 0.97 + 1.20 + 0.51 = 2.68 \frac{\text{hr °F}}{\text{Btu}} \text{ (English units)} \tag{3.24}$$

$$R_t = 7.65 + 9.56 + 4.03 = 21.24 \frac{\text{sec °C}}{\text{cal}} \text{ (metric units)} \tag{3.24a}$$

The temperature rise across the length of the bulkhead is then determined from Eq. 3.15, in English units and metric units.

Given $Q = 9$ watts $= 30.72$ Btu/hr $= 2.15$ cal/sec (heat dissipated)
$R_t = 2.68$ hr °F/Btu $= 21.24$ sec °C/cal (thermal resistance)

$$\Delta t = (30.72)(2.68) = 82.3°\text{F (English units)} \tag{3.25}$$

$$\Delta t = (2.15)(21.24) = 45.7°\text{C (metric units)} \tag{3.25a}$$

3.11 TWO DIMENSIONAL ANALOG RESISTOR NETWORKS

The conduction heat flow path through a typical electronic chassis usually occurs in two or more directions at the same time. If there are several concentrated heat input sources along the path, the temperature distribution along the heat flow path may be difficult to evaluate. The problem may be simplified by breaking up the structure into a group of smaller elements, which are interconnected by thermal resistors. The mass of each small element would be concentrated at the geometric center of the element. This point is called the node point of the element and is shown in Figure 3.11. The network of resistors and nodes is called an analog resistor network, and it is based upon the electrical networks that are used so extensively by electrical and electronic engineers [15, 17, 24].

Very large two and three dimensional analog resistor networks are often used with high speed digital computers to determine the thermal profile of

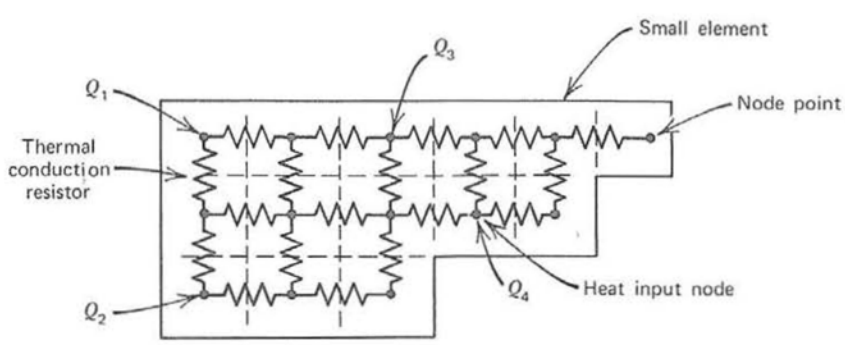

Figure 3.11 Analog resistor network for two dimensional heat flow in a plate.

complex structures. Temperatures in smaller models can often be determined with the use of the basic conduction heat flow relation shown in Eq. 3.1. A heat balance equation is written for each node point in the mathematical model. The simultaneous solution of these equations then results in the temperatures at each node point.

The heat balance equations are a little easier to use when the concept of thermal conductance is used instead of thermal resistance. Thermal conductance (k') is defined as the inverse of the thermal resistance (R), as shown in Eq. 3.26.

$$k' = \frac{1}{R} = \frac{KA}{L} \tag{3.26}$$

Substitute Eq. 3.26 into Eq. 3.1. This results in the steady state heat flow relation using the concept of conductance, which is shown in Eq. 3.27.

$$Q = k' \, \Delta t = k'(t_2 - t_1) \tag{3.27}$$

3.12 SAMPLE PROBLEM—TWO DIMENSIONAL CONDUCTION ON A POWER SUPPLY HEAT SINK

A cantilevered copper bracket is used to support part of a power supply, which consists of two power transistors and two wire wound resistors, with power dissipations as shown in Figure 3.12. The power supply heat sink is bolted to a cold plate, which is maintained at a temperature of 160°F (71°C). Determine the temperatures at the four component mounting points on the power supply heat sink.

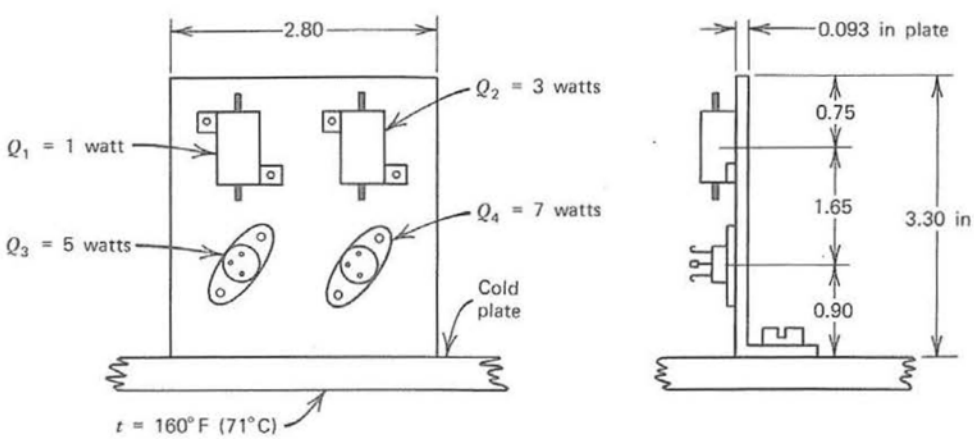

Figure 3.12 Components mounted on a heat sink bracket.

SOLUTION

The bracket is divided into small rectangular elements, with a node point at the geometric center of each element. The node points in each element are interconnected to form a rectangular grid pattern. This results in a mathematical model of the heat sink bracket, which is in the form of an analog conductance network representing a system with heat flow in two directions, as shown in Figure 3.13.

A heat balance equation must be written for each of the node points in the mathematical model to determine the temperature at each node point. To avoid the possibility of making an error in establishing a positive (+) or negative (−) heat flow direction within the heat sink bracket, a simple rule can be followed. Assume that all of the heat is flowing into each node as it is being examined. This will require changing the assumed heat flow direction in the various conductors, as the heat balance equations are written for different nodes. Starting at node 1, assume that the heat from node 2 flows into node 1, the heat from node 3 flows into node 1, and the heat from Q_1 flows into node 1. This is equivalent to assuming that the temperatures at node points 2 and 3 are higher than the temperature at node point 1. The heat flow relation shown by Eq. 3.27 is then used at each node.

The heat flow balance at node 1 is as follows:

$$k'_A(t_2 - t_1) + k'_B(t_3 - t_1) + Q_1 = 0$$

This leads to

$$(k'_A + k'_B)t_1 - k'_A t_2 - k'_B t_3 = Q_1 \tag{3.28}$$

The heat flow balance at node 2 is as follows:

$$k'_A(t_1 - t_2) + k'_C(t_4 - t_2) + Q_2 = 0$$

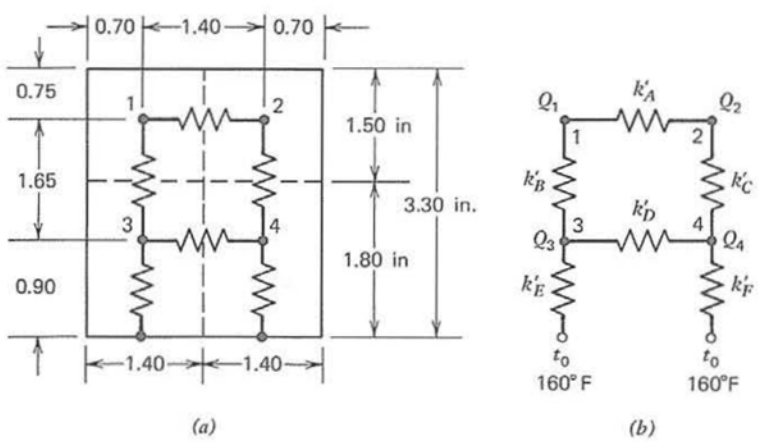

Figure 3.13 Mathematical model of the component bracket.

SEC et al. v. MRI
SEC Exhibit 1027.0069
IPR2023-00255

This leads to

$$-k'_A t_1 + (k'_A + k'_C)t_2 - k'_C t_4 = Q_2 \tag{3.29}$$

The heat flow balance at node 3 is as follows:

$$k'_B(t_1 - t_3) + k'_D(t_4 - t_3) + k'_E(t_0 - t_3) + Q_3 = 0$$
$$-k'_B t_1 + (k'_B + k'_D + k'_E)t_3 - k'_D t_4 = Q_3 + k'_E t_0 \tag{3.30}$$

The heat flow balance at node 4 is as follows:

$$k'_C(t_2 - t_4) + k'_D(t_3 - t_4) + k'_F(t_0 - t_4) + Q_4 = 0$$
$$-k'_C t_2 - k'_D t_3 + (k'_C + k'_D + k'_F)t_4 = Q_4 + k'_F t_0 \tag{3.31}$$

There are now four equations, 3.28 through 3.31, with four unknowns, t_1 through t_4, which can be solved simultaneously once all the conductances k'_A through k'_F have been determined. Each conductance can be determined using Figure 3.12 with Eq. 3.26 for English units and metric units. Start with conductance k'_A.

Given K_A = 166 Btu/hr ft °F = 0.686 cal/sec cm°C (copper conductivity)
A_A = (1.5)(0.093) = 0.139 in² (cross section area)
A_A = 0.000965 ft² = 0.897 cm²
L_A = 1.40 in = 0.117 ft = 3.56 cm (length)

In English units:

$$k'_A = \frac{(166 \text{ Btu/hr ft °F})(0.000965 \text{ ft}^2)}{0.117 \text{ ft}} = 1.37 \frac{\text{Btu}}{\text{hr °F}} \tag{3.32}$$

In metric units:

$$k'_A = \frac{(0.686 \text{ cal/sec cm °C})(0.897 \text{ cm}^2)}{3.56 \text{ cm}} = 0.173 \frac{\text{cal}}{\text{sec °C}} \tag{3.32a}$$

Calculate conductance k'_B.

Given K_B = 166 Btu/hr ft °F = 0.686 cal/sec cm°C (copper conductivity)
A_B = (1.40)(0.093) = 0.130 in² (cross section area)
A_B = 0.000903 ft² = 0.839 cm²
L_B = 1.65 in = 0.137 ft = 4.19 cm (length)

SEC et al. v. MRI
SEC Exhibit 1027.0070
IPR2023-00255

In English units:

$$k'_B = \frac{(166)(0.000903)}{0.137} = 1.09 \frac{\text{Btu}}{\text{hr °F}} \tag{3.33}$$

In metric units:

$$k'_B = \frac{(0.686)(0.839)}{4.19} = 0.137 \frac{\text{cal}}{\text{sec °C}} \tag{3.33a}$$

Calculate conductance k'_E.

Given $K_E = 166$ Btu/hr ft °F $= 0.686$ cal/sec cm °C (copper conductivity)
$A_E = (1.40)(0.093) = 0.130$ in^2 (cross section area)
$A_E = 0.000903$ ft$^2 = 0.839$ cm^2
$L_E = 0.90$ in $= 0.075$ ft $= 2.29$ cm (length)

In English units:

$$k'_E = \frac{(166)(0.000903)}{0.075} = 2.00 \frac{\text{Btu}}{\text{hr °F}} \tag{3.34}$$

In metric units:

$$k'_E = \frac{(0.686)(0.839)}{2.29} = 0.251 \frac{\text{cal}}{\text{sec °C}} \tag{3.34a}$$

Calculate conductance k'_D on the copper plate.

Given $A_D = (1.80)(0.093) = 0.167$ in^2 (cross section area)
$A_D = 0.00116$ ft$^2 = 1.077$ cm^2
$L_D = 1.40$ in $= 0.117$ ft $= 3.56$ cm (length)

In English units:

$$k'_D = \frac{(166)(0.00116)}{0.117} = 1.64 \frac{\text{Btu}}{\text{hr °F}} \tag{3.35}$$

In metric units:

$$k'_D = \frac{(0.686)(1.077)}{3.56} = 0.207 \frac{\text{cal}}{\text{sec °C}} \tag{3.35a}$$

Because of symmetry

$$k'_C = k'_B \quad \text{and} \quad k'_F = k'_E \tag{3.36}$$

SEC et al. v. MRI
SEC Exhibit 1027.0071
IPR2023-00255

The power dissipations at each of the four nodes are as follows (see Table 1.1 for power conversions):

$$\left.\begin{aligned} Q_1 &= 1 \text{ watt} = 3.41\,\frac{\text{Btu}}{\text{hr}} = 0.239\,\frac{\text{cal}}{\text{sec}} \\ Q_2 &= 3 \text{ watts} = 10.24\,\frac{\text{Btu}}{\text{hr}} = 0.717\,\frac{\text{cal}}{\text{sec}} \\ Q_3 &= 5 \text{ watts} = 17.06\,\frac{\text{Btu}}{\text{hr}} = 1.19\,\frac{\text{cal}}{\text{sec}} \\ Q_4 &= 7 \text{ watts} = 23.89\,\frac{\text{Btu}}{\text{hr}} = 1.67\,\frac{\text{cal}}{\text{sec}} \end{aligned}\right\} \tag{3.37}$$

Substitute Eqs. 3.32, 3.33, and 3.37 into Eq. 3.28 using English units.

$$2.46t_1 - 1.37t_2 - 1.09t_3 = 3.41\,\frac{\text{Btu}}{\text{hr}} \tag{3.38}$$

Substitute Eqs. 3.32, 3.36, and 3.37 into Eq. 3.29 using English units.

$$-1.37t_1 + 2.46t_2 - 1.09t_4 = 10.24\,\frac{\text{Btu}}{\text{hr}} \tag{3.39}$$

Substitute Eqs. 3.33, 3.35, 3.34, and 3.37 into Eq. 3.30 using English units.

$$\begin{aligned} -1.09t_1 + 4.73t_3 - 1.64t_4 &= 17.06 + (2.0)(160) \\ -1.09t_1 + 4.73t_3 - 1.64t_4 &= 337.06\,\frac{\text{Btu}}{\text{hr}} \end{aligned} \tag{3.40}$$

Substitute Eqs. 3.36, 3.35, and 3.37 into Eq. 3.31 using English units.

$$\begin{aligned} -1.09t_2 - 1.64t_3 + 4.73t_4 &= 23.89 + (2.0)(160) \\ -1.09t_2 - 1.64t_3 + 4.73t_4 &= 343.89\,\frac{\text{Btu}}{\text{hr}} \end{aligned} \tag{3.41}$$

Equations 3.38 through 3.41 must be solved simultaneously to obtain the temperatures at node points 1 through 4. Several different methods can be used if a calculator is not available. For example, using the substitution method, Eqs. 3.38 and 3.39 can be combined to eliminate t_1.

$$\begin{aligned} 2.46t_1 - 1.37t_2 - 1.09t_3 &= 3.41 && \text{(ref. Eq. 3.38)} \\ -2.46t_1 + 4.42t_2 - 1.96t_4 &= 18.39 && \left(\text{ref. Eq. 3.39} \times \frac{2.46}{1.37}\right) \\ \hline + 3.05t_2 - 1.09t_3 - 1.96t_4 &= 21.80 \end{aligned} \tag{3.42}$$

SEC et al. v. MRI
SEC Exhibit 1027.0072
IPR2023-00255

Next, combine Eqs. 3.39 and 3.40, eliminating t_4.

$$\begin{array}{r} 2.06t_1 - 3.70t_2 + 1.64t_4 = -\ 15.41 \\ -1.09t_1 + 4.73t_3 - 1.64t_4 = \ \ 337.06 \\ \hline 0.97t_1 - 3.70t_2 + 4.73t_3 = \ \ 321.65 \end{array} \tag{3.43}$$

Combine Eqs. 3.40 and 3.41, eliminating t_3.

$$\begin{array}{r} -1.09t_1 + 4.73t_3 - \ \ 1.64t_4 = \ \ 337.06 \\ -3.14t_2 - 4.73t_3 + 13.64t_4 = \ \ 991.83 \\ \hline -1.09t_1 - 3.14t_2 + 12.00t_4 = 1328.89 \end{array} \tag{3.44}$$

Combine Eqs. 3.42 and 3.43, eliminating t_2.

$$\begin{array}{rrrr} & 3.70t_2 & - 1.32t_3 & - 2.38t_4 = \ \ 26.44 \\ 0.97t_1 & - 3.70t_2 & + 4.73t_3 & = 321.65 \\ \hline 0.97t_1 & & + 3.41t_3 & - 2.38t_4 = 348.09 \end{array} \tag{3.45}$$

Combine Eqs. 3.43 and 3.44, eliminating t_2.

$$\begin{array}{rrrr} 0.97t_1 & - 3.70t_2 & + \ \ 4.73t_3 = & \ \ 321.65 \\ 1.28t_1 & + 3.70t_2 & - 14.14t_4 = & -1565.89 \\ \hline 2.25t_1 & & + 4.73t_3 - 14.14t_4 = & -1244.24 \end{array} \tag{3.46}$$

Combine Eqs. 3.41 and 3.42, eliminating t_2.

$$\begin{array}{r} -3.05t_2 - 4.59t_3 + 13.23t_4 = 962.26 \\ 3.05t_2 - 1.09t_3 - \ \ 1.96t_4 = \ \ 21.80 \\ \hline - 5.68t_3 + 11.27t_4 = 984.06 \end{array} \tag{3.47}$$

Combine Eqs. 3.45 and 3.46, eliminating t_1.

$$\begin{array}{r} -2.25t_1 - 7.91t_3 + \ \ 5.52t_4 = -\ 807.42 \\ 2.25t_1 + 4.73t_3 - 14.14t_4 = -1244.24 \\ \hline - 3.18t_3 - \ \ 8.62t_4 = -2051.66 \end{array} \tag{3.48}$$

Combine Eqs. 3.47 and 3.48, eliminating t_3. This will give the temperature at node point 4.

$$\begin{array}{r} -5.68t_3 + 11.27t_4 = \ \ 984.06 \\ +5.68t_3 + 15.40t_4 = 3664.60 \\ \hline 26.67t_4 = 4648.66 \\ t_4 = 174.3°\text{F} \end{array} \tag{3.49}$$

SEC et al. v. MRI
SEC Exhibit 1027.0073
IPR2023-00255

Substitute Eq. 3.49 into Eq. 3.48 for the temperature at mounting point 3, which is also node. 3.

$$-3.18t_3 - 8.62(174.3) = -2051.66$$

$$t_3 = 172.9°F \tag{3.50}$$

Substitute Eqs. 3.49 and 3.50 into Eq. 3.46 for the temperature at mounting point 1.

$$2.25t_1 + 4.73(172.9) - 14.14(174.3) = -1244.24$$

$$t_1 = 178.8°F \tag{3.51}$$

Substitute Eqs. 3.49 and 3.50 into Eq. 3.42 for the temperature at mounting point 2.

$$3.05t_2 - 1.09(172.9) - 1.96(174.3) = 21.80$$

$$t_2 = 181.0°F \tag{3.52}$$

The same process can be repeated with the metric units by substituting Eqs. 3.32a through 3.36a and Eq. 3.37 into Eqs. 3.28 through 3.31. This will result in four equations with four unknowns, for temperatures in degrees Celsius.

3.13 HEAT CONDUCTION ACROSS INTERFACES IN AIR

The electronics industry makes extensive use of brackets, heat sinks, and circuit boards for mounting electronic components that are cooled by conduction. This often requires the transfer of heat across interfaces that may be bolted, riveted, or just clamped together. Extreme caution must be used if large amounts of heat will be conducted across these interfaces, because a poor thermal contact will produce a large thermal resistance, which means a high temperature rise. High temperatures will then result in more rapid electrical failures.

An enlarged view of two surfaces in contact will reveal that a very small portion of the total surface is actually in contact, as shown in Figure 3.14.

Most of the heat flow across the interface will take place between the various high points that contact each other. The number of high points per square inch of surface area that contact each other will generally depend upon the flatness, smoothness, hardness, stiffness, and interface pressure between the two mating surfaces [25–28].

The amount of heat that can be conducted across the interface will also depend upon the presence of another material at the interface, such as air, oil, or grease. Many manufacturers use special silicone greases, or pastes,

SEC et al. v. MRI
SEC Exhibit 1027.0074
IPR2023-00255

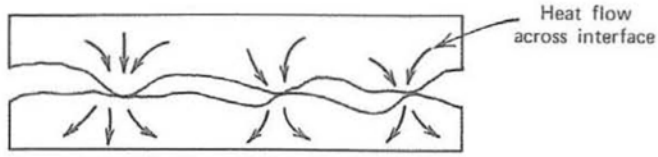

Figure 3.14 Enlarged view of two surfaces in contact.

which are filled with thermally conductive metal oxides to improve the overall heat transfer. These materials will not dry out or harden at temperatures well above the maximum operating temperatures of most electronic components. Water, which has a high thermal conductivity, is excellent as an interface conductor, but it evaporates too easily.

Sometimes large surfaces, which are not flat, must be mated using a dry interface. A soft, thin foil such as aluminum, indium, or copper about 0.002 in (0.0051 cm) thick will often improve the heat transfer across the interface.

Large surfaces should use stiff interface sheets to reduce the amount of warping. Large surfaces may also be improved with the use of an interface material made of a soft wire screen impregnated with a high carbon rubber. A thin beryllium copper sheet stamped with thousands of little spring fingers has worked well in many applications.

It is convenient to express the thermal interface characteristics in terms of a conductance coefficient h_i so that the heat transfer relation shown in Eq. 3.53 can be used [28].

$$Q = h_i A \, \Delta t \tag{3.53}$$

Given

Item	*Symbol*	*English Units*	*Metric units*
Power dissipation	Q	$\frac{\text{Btu}}{\text{hr}}$	$\frac{\text{cal}}{\text{sec}}$
Interface conductance	h_i	$\frac{\text{Btu}}{\text{hr ft}^2\ ^\circ\text{F}}$	$\frac{\text{cal}}{\text{sec cm}^2\ ^\circ\text{C}}$
Area	A	ft^2	cm^2
Temperature difference	Δt	°F	°C

A considerable number of test data are available for the interface conductances of different types of joints, with different metals, different surface finishes, and different interface materials. These data are generally based upon the interface pressure between the two mating surfaces and the finish of these surfaces. The finish is measured by the rms (root mean square)

SEC et al. v. MRI
SEC Exhibit 1027.0075
IPR2023-00255

index value of the small variations in the heights and depths of the many peaks and valleys found on all surfaces. Some typical rms values for various surfaces are shown in Table 3.4 [18, 19].

In general, a smooth surface is considered to have an rms finish less than about 15, and a rough surface is considered to have an rms finish greater than about 80. Some typical test data are shown in Figures 3.15, 3.16, and 3.17.

Table 3.5 shows typical interface conductances for various materials with an interface pressure of 10 psi.

An examination of the curves and tables shows that for a given surface finish and interface pressure, hard materials such as steel will have a lower interface conductance than will softer materials such as aluminum. Also, when the surface finish and surface flatness are improved, the interface conductance will rise substantially.

The interface conductance will increase when the clamping forces are increased. Low clamping forces will have lower conductance values than will high clamping forces. Smooth surfaces have high interface conductances with relatively low clamping forces. Increasing the clamping force between smooth surfaces does not greatly improve the interface conductance. Rough surfaces, on the other hand, have low interface conductances with low interface pressures. Increasing the clamping force between rough surfaces improves the interface conductance substantially [27, 28].

Figure 3.16 shows that for a given interface pressure and surface finish, a higher heat density will result in a higher interface conductance. Test data also show that the interface conductance rises substantially when the temperature is increased.

Most of the test data between two structural members, which are riveted,

Table 3.4 Typical Surface Finishes for Different Operations

Operation	Surface Finish (μin rms)
Lap	4
Grind	10
Rolled surface	15–20
Lathe, smooth cut	80
Lathe, rough cut	120
Milling machine, rough cut	125
Investment casting	125–240
File	240
Sand casting	240–300
Shaper	1000

SEC et al. v. MRI
SEC Exhibit 1027.0076
IPR2023-00255

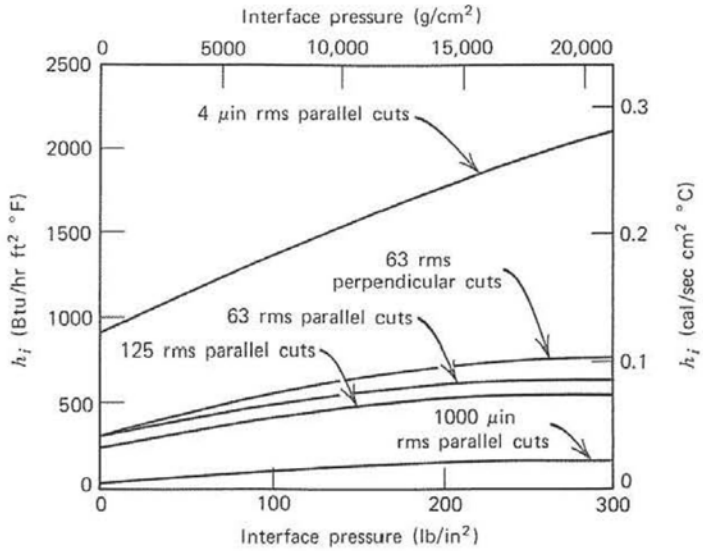

Figure 3.15 Interface conductance for parallel and perpendicular machine cuts for 18% carbon steel at 100°C (212°F) at sea level conditions.

bolted, or spot welded together, will show a substantial amount of variation in the interface conductance values. Structural members that appear to be identical in all other respects will often have large variations in their interface conductances. These values are heavily dependent upon the surface contact area and interface pressure in the sections immediately under and around the riveted, bolted, and spot welded members. These parameters are difficult to control exactly, even with automatic machines. Therefore, the test data for structural members will show a great deal of variation [27, 28].

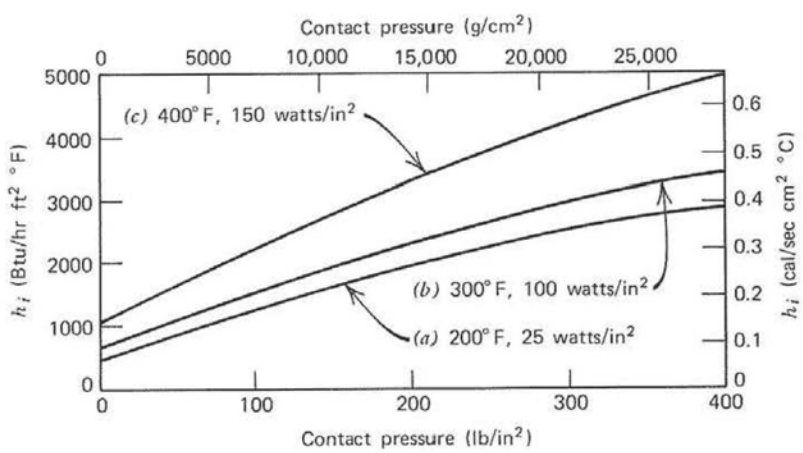

Figure 3.16 Interface conductance for 7075 T6 aluminum at sea level at various temperatures with 65 μin rms surface finish.

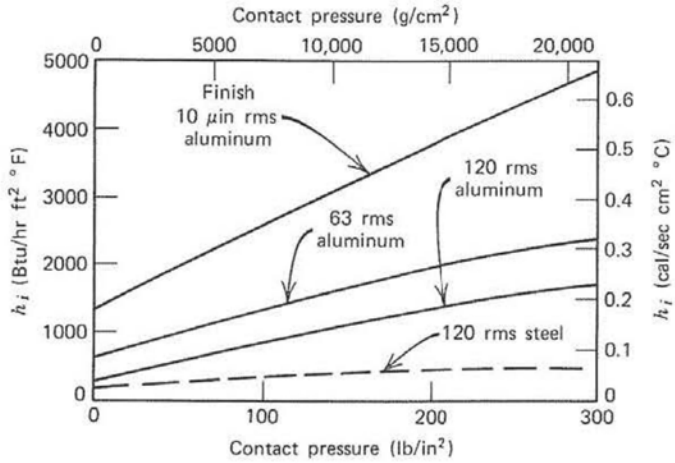

Figure 3.17 Interface conductance for various interface pressures at sea level.

3.14 SAMPLE PROBLEM—TEMPERATURE RISE ACROSS A BOLTED INTERFACE

Determine the temperature rise across the bolted interfaces of an aluminum bracket that is bolted to a chassis side wall. The bolts will produce an interface pressure of 200 lb/in² (14,074 g/cm²), as shown in Figure 3.18. The total power dissipation of the components on the bracket is 12 watts. The surface roughness at the bolted interfaces is about 65 μin rms. The bracket is in a confined area where very little heat will be lost by convection or radiation.

SOLUTION

Equation 3.53 can be used to determine the temperature rise across the bolted interfaces, together with Figure 3.16.

Given Q = 12 watts = 40.9 Btu/hr = 2.87 cal/sec (heat input)

$A = 2[(0.50)(0.50) - (\pi/4)(0.150)^2] = 0.464$ in²

$A = 0.00322$ ft² = 2.99 cm² (interface area)

$\frac{Q}{A}$ = 12 watts/(0.464 in²) = 25.8 watts/in² = 4.01 watts/cm² (power density)

h_i = 2000 Btu/hr ft² °F = 0.270 cal/sec cm² °C (interface conductance; Figure 3.16, curve A)

Substitute into Eq. 3.53 for the temperature rise in English units.

$$\Delta t = \frac{40.9 \text{ Btu/hr}}{(2000 \text{ Btu/hr ft}^2\ ^\circ\text{F})(0.00322 \text{ ft}^2)} = 6.4^\circ\text{F} \tag{3.54}$$

SEC et al. v. MRI
SEC Exhibit 1027.0078
IPR2023-00255

Table 3.5 Interface Conductance for Various Materials with an Interface Pressure of 10 psi

Material	Rms Surface 1	Rms Surface 2	Interface Conductance $\frac{\text{Btu}}{\text{hr ft}^2\ °\text{F}}$ Dry	Oil[a]	$\frac{\text{cal}}{\text{sec cm}^2\ °\text{C}}$ Dry	Oil[a]
SAE 4141 steel	3	3	2200		0.297	
	70	85	400	1350	0.054	0.182
5051 aluminum	16	17	1800		0.243	
	60	60	1300	2000	0.175	0.270
	15	90	800	1600	0.108	0.216
Bronze AMS 4846	70	80	800	1200	0.108	0.162

[a] *Oil thermal conductivity* K = *0.073 Btu/hr ft °F = 0.00030 cal/sec cm °C.*

In metric units:

$$\Delta t = \frac{2.87\ \text{cal/sec}}{(0.270\ \text{cal/sec cm}^2\ °\text{C})(2.99\ \text{cm}^2)} = 3.5°\text{C} \tag{3.54a}$$

Air is a relatively good conductor of heat. Often, the air at the interface of two surfaces will carry a large part of the heat if the surfaces are very rough or the interface pressure is very low. This can be demonstrated by considering a slight modification of the preceding sample problem.

3.15 SAMPLE PROBLEM—TEMPERATURE RISE ACROSS A SMALL AIR GAP

In the preceding sample problem, there is dirt on the bracket, so that there is poor physical contact between the component bracket and the heat sink.

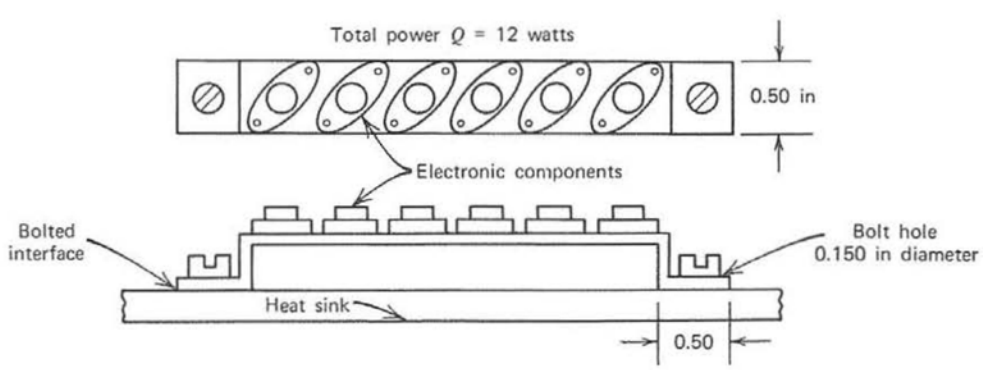

Figure 3.18 Component bracket bolted to a heat sink.

There is an air gap of 0.001 in (0.0025 cm) under the bracket. Determine the temperature rise across the air gap.

SOLUTION

The temperature rise across the air gap is determined with the use of the conduction relation shown in Eq. 3.1.

Given Q = 12 watts = 40.9 Btu/hr = 2.87 cal/sec (heat input)
L = 0.001 in = 0.000083 ft = 0.0025 cm (length of gap)
K = 0.017 Btu/hr ft °F = 0.0000702 cal/sec cm °C (air conductivity at 160°F)
A = 0.464 in^2 = 0.00322 ft^2 = 2.99 cm^2 (interface area)

In English units:

$$\Delta t = \frac{(40.9 \text{ Btu/hr})(0.000083 \text{ ft})}{(0.017 \text{ Btu/hr ft °F})(0.00322 \text{ ft}^2)} = 62.0°\text{F} \tag{3.55}$$

In metric units:

$$\Delta t = \frac{(2.87 \text{ cal/sec})(0.0025 \text{ cm})}{(0.0000702 \text{ cal/sec cm°C})(2.99 \text{ cm}^2)} = 34.2°\text{C} \tag{3.55a}$$

When a thermal grease is used at the interface of the mounting bracket, the temperature rise across the interface can be reduced. Thermal greases have thermal conductivities that generally range from about 0.2 to about 0.9 Btu/hr ft °F (0.00083 to 0.0037 cal/sec cm °C). For an average value of about 0.5 Btu/hr ft °F (0.0021 cal/sec cm °C), with an average thickness of 0.002 in (0.000166 ft), the temperature rise across the interface will be

$$\Delta t = \frac{(40.9)(0.000166)}{(0.5)(0.00322)} = 4.2°\text{F } (2.3°\text{C}) \tag{3.56}$$

To get the same temperature rise across the bracket interface without the thermal grease, a better surface finish and a higher interface pressure will be required.

3.16 HEAT CONDUCTION ACROSS INTERFACES AT HIGH ALTITUDES

The amount of heat that can be transferred between two clamped surfaces is often sharply reduced at high altitudes. No heat will be conducted between two adjacent surfaces in a hard vacuum environment if they are not

SEC et al. v. MRI
SEC Exhibit 1027.0080
IPR2023-00255

in intimate contact with each other. Small amounts of heat may be radiated from one interface to another, depending upon the temperatures and the physical properties of the surfaces. However, conduction heat transfer requires some medium—solid, liquid, or gas—through which the heat can be transferred.

The change in the interface conductance between two adjacent surfaces with a low interface pressure, for various altitude conditions from sea level to a hard vacuum, is shown in Figure 3.19. This curve shows that special care must be used at the thermal interfaces of electronic assemblies that will be cooled by conduction in outer space applications. It also shows that there is very little change in the interface conduction for altitudes up to about 80,000 ft. Above that altitude, the interface conductance values begin to drop off very rapidly [25, 26].

Rigid thermal interfaces must be provided for surfaces that are expected to transfer heat in a vacuum environment. Test data show that typical sheet metal types of structures can have interface conductances that are only 10% of what they are at sea level. Some test data for different surface finishes are shown in Figure 3.20.

Most of the interface test data found in the literature are based upon very small and very rigid structural elements. This type of test sample is easy to control. The interface pressure can be established accurately, it is uniform across the entire surface, and different finishes are easy to obtain.

In the real world of electronic structures, the interface areas are often quite large, the interface pressures are not uniform, and the surfaces are not stiff and flat. Because of these factors, the actual interface conductances for large sheet metal structures will generally be much lower than most published test data show. Tests on large bolted sheet metal plates show that typical interface conductances will probably be in the range of a few hundred

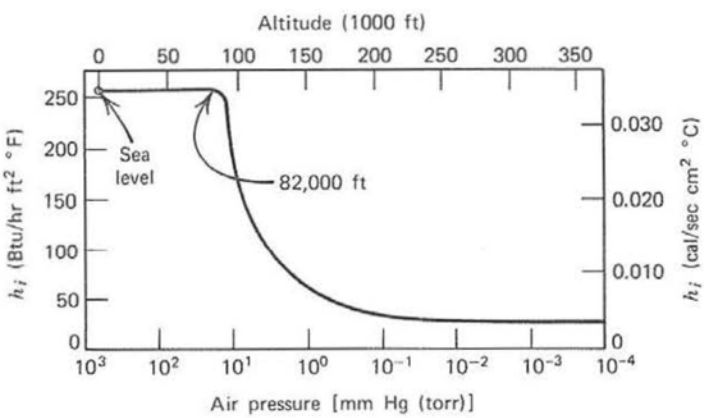

Figure 3.19 Interface conductance with contact pressure of 2 psi (140.7 g/cm²). Copper, 0.011 TIR, 10 μin rms finish in contact with brass, 0.004 TIR, 22 μin rms finish, as a function of altitude.

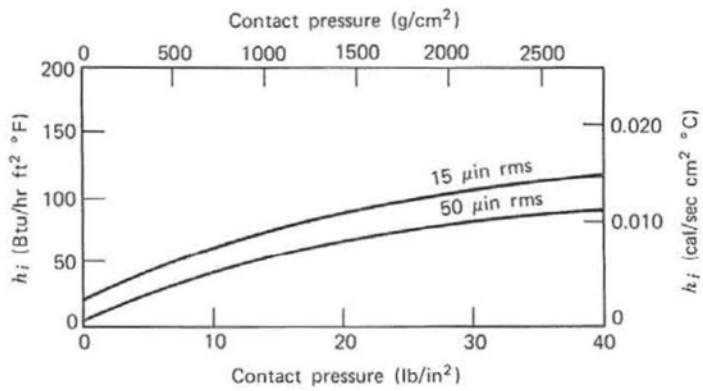

Figure 3.20 Interface conductance for 2024 T6 aluminum blocks at 10^{-4} torr.

rather than in the range of a few thousand (in English units). Some test data for large bolted sheet metal plates are shown in Table 3.6. Additional test data on various interfaces are shown in Tables 3.7 and 3.8.

When it is necessary to conduct heat across large nonrigid surfaces in a hard vacuum, some special heat transfer interfaces may have to be fabricated. One type of assembly that can provide an interface conductance of about 100 Btu/hr ft² °F (0.0135 cal/sec cm² °C) with an interface pressure of only 10 lb/in² (703.7 g/cm²) in a hard vacuum (10^{-6} torr) is shown in Figure

Table 3.6 Average Interface Conductance for Two As-Received Aluminum Plates 10 × 20 × 0.25 in Thick (25.4 × 50.8 × 0.635 cm) Bolted Only at the Four Corners and Using Various Interface Materials

	Interface Conductance (h_i)			
	In Air at Sea Level		Vacuum (10^{-6} torr)	
Interface Material	Btu / hr ft² °F	cal / sec cm² °C	Btu / hr ft² °F	cal / sec cm² °C
0.002 in (0.0051 cm) copper or aluminum foil	300	0.0405	100	0.0135
0.020 in (0.0508 cm) rubber-impregnated aluminum screen	200	0.027	40	0.0054
0.005 in (0.0127 cm) beryllium copper foil with 1000 small fingers	200	0.027	40	0.0054
No interface material	200	0.027	20	0.0027

SEC et al. v. MRI
SEC Exhibit 1027.0082
IPR2023-00255

Table 3.7 Average Interface Conductance for 5052 (1/4 Hard) Aluminum Strip 3.0 × 0.25 × 0.06 in Thick (7.62 × 0.635 × 0.152 cm) Clamped to a 0.25 in (0.635 cm) Thick Aluminum Plate[a]

	Interface Conductance (h_i)			
	Sea Level		10^{-5} Torr (mm hg)	
Interface Pressure	$\frac{\text{Btu}}{\text{hr ft}^2\,°\text{F}}$	$\frac{\text{cal}}{\text{sec cm}^2\,°\text{C}}$	$\frac{\text{Btu}}{\text{hr ft}^2\,°\text{F}}$	$\frac{\text{cal}}{\text{sec cm}^2\,°\text{C}}$
500 psi	350	0.0472	170	0.0230
1000 psi	520	0.0702	340	0.0459

[a] *Surface finish on both members about 15 μin rms.*

3.21. The interface assembly consists of a soft thin copper foil that is wrapped around a silicone rubber tube and soldered to a flat copper sheet.

3.17 OUTGASSING AT HIGH ALTITUDES

Many materials tend to release trapped gasses when the surrounding pressure is reduced. This applies to many common materials, such as rubbers, epoxies, greases, plastics, and even metals. More trapped gasses are released when the outside pressures are lower.

Outgassing may not be a problem unless there is optical equipment in the area or a hard vacuum condition is required for thermal isolation or electrical isolation.

Camera lenses and mirrors, which require a smooth clear surface, can often become coated if outgassing materials are present. The coating process may take a few days or a few weeks to develop, depending upon the

Table 3.8 Average Interface Conductance for a Small Chassis with a 5052 Aluminum Base Plate 4 × 6 × 0.125 in Thick (10.16 × 15.24 × 0.317 cm) Bolted to a 1.0 in (2.54 cm) Thick Cold Plate with Four No. 10–32 Screws at the Corners[a]

	Interface Conductance (h_i)			
	Sea Level		10^{-5} torr (mm hg)	
Interface Condition	English Units	Metric Units	English Units	Metric Units
Bolted at the four corners	220	0.0297	50	0.00675

[a] *Surface finish on both members about 32 μin rms.*

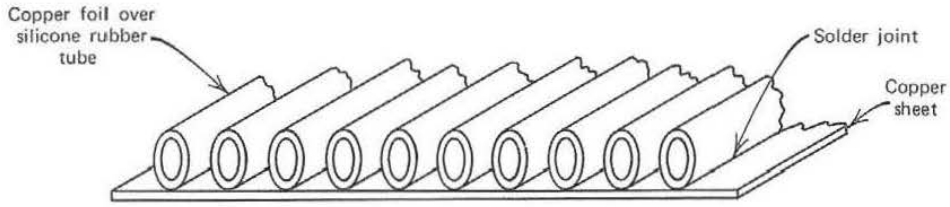

Figure 3.21 Resilient assembly for conducting heat across large nonrigid interfaces in a hard vacuum.

conditions. Once the optical surfaces are coated, however, the performance of the equipment will degrade substantially.

Outgassing can have the effect of increasing the pressure in a local area. Some electronic applications require thermal isolation to permit high temperatures to be developed with very low heating element power. If outgassing is present, it will substantially increase the heat transfer by gaseous conduction in small confined areas, so that the required high temperatures may never be reached.

In electrical applications, it is possible for arcing to develop if outgassing occurs in a vacuum environment. Arcing may not occur at sea level conditions or in a hard vacuum. However, with outgassing present, the effective altitude in the immediate area is changed so that ionization in the gas can occur and arcing will develop.

3.18 CIRCUIT BOARD EDGE GUIDES

Plug-in PCBs are often used with guides, which help to align the PCB connector with the chassis connector. These guides, which are usually fastened to the side walls of a chassis, grip the edges of the PCB as it is inserted and removed. If there is enough contact pressure and surface area at the interface between the edge guide and the PCB, the edge guide can be used to conduct heat away from the PCB. A typical installation is shown in Figure 3.22.

Plug-in PCBs must engage a blind connector, which is usually fastened to the chassis. If the chassis connector is rigid, with no floating provisions, the edge guide must provide that float, or many connector pins will be bent and broken. Rigid chassis connectors are generally used for electrical connections because wire wrap harnesses, flex tape harnesses, and multilayer master interconnecting mother boards are being used for production systems. These interconnections cannot withstand the excessive motion required for a floating connector system. Therefore, the floating mechanism is often built into the circuit board edge guides.

High pressures with dry, smooth interfaces must be provided in the edge connector if it is to be a good heat conductor. Thermal greases are unde-

SEC et al. v. MRI
SEC Exhibit 1027.0084
IPR2023-00255

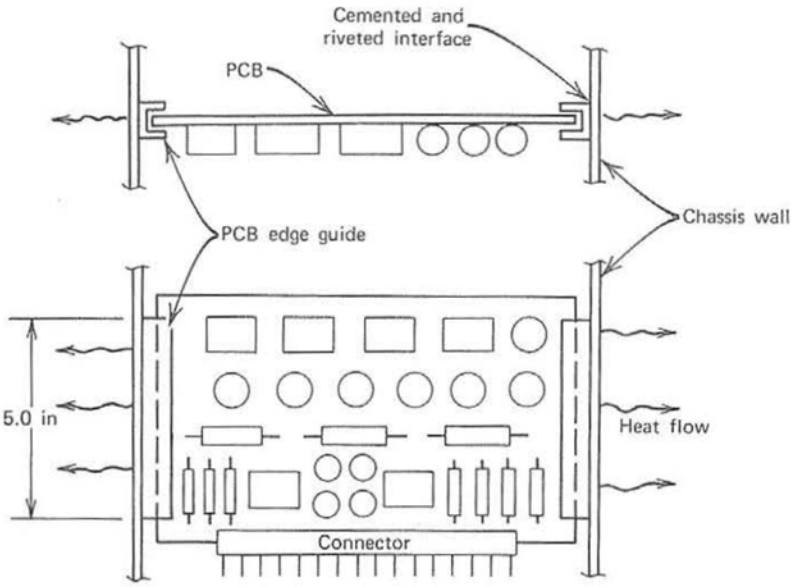

Figure 3.22 Plug-in PCB assembly with board edge guides.

sirable at these interfaces because they are very messy to handle and must be replaced every time a PCB is pulled for inspection or repair.

Many different types of circuit board edge guides are used by the electronics industry. The thermal resistance across a typical guide is rather difficult to calculate accurately, so that tests are used to establish these values. The units used to express the thermal resistance across an edge guide are °C in/watt. When the length of the guide is expressed in inches and the heat flow is in watts, the temperature rise is in degrees Celsius. Figure 3.23 shows four different types of edge guides, with the thermal resistance across each guide.

These board edge guides are generally satisfactory for applications at sea level or medium altitudes up to about 50,000 ft. At altitudes of 100,000 ft, test data show that the resistance values for the guides in Figure 3.23*a–c* will increase about 30%. The wedge clamp shown in Figure 3.23*d* will have about a 5% increase.

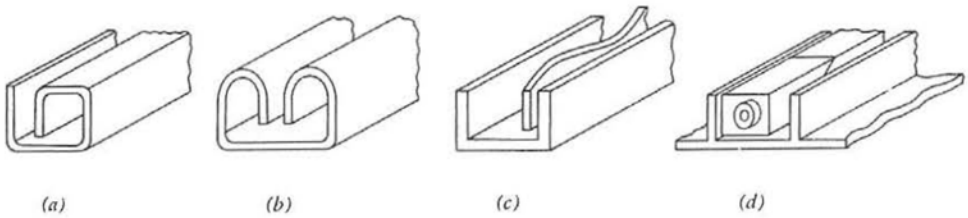

Figure 3.23 Board edge guides with typical thermal resistance. (*a*) G guide, 12°C in/watt; (*b*) B guide, 8°C in/watt; (*c*) U guide, 6°C in/watt; (*d*) wedge clamp, 2°C in/watt.

SEC et al. v. MRI
SEC Exhibit 1027.0085
IPR2023-00255

For hard vacuum conditions, where the pressure is less than 10^{-6} torr (mm hg), as normally experienced in outer space work, some of these edge guides may not be satisfactory, except for very low power dissipations. Outer space environments generally require very high pressure interfaces, with flat and smooth surfaces, to conduct heat effectively. Wedge clamps are very effective here because they can produce high interface pressures. Bolted interfaces are also used extensively because even small bolts can produce high forces. However, bolted interfaces lack the plug-in feature that is considered very desirable for maintenance.

3.19 SAMPLE PROBLEM—TEMPERATURE RISE ACROSS A PCB EDGE GUIDE

Determine the temperature rise across the PCB edge guide (from the edge of the PCB to the chassis wall) for the assembly shown in Figure 3.22. The edge guide is 5.0 in long, type *c*, as shown in Figure 3.23. The total power dissipation of the PCB is 10 watts, uniformly distributed, and the equipment must operate at 100,000 ft.

SOLUTION

Since there are two edge guides, half of the total power will be conducted through each guide. The temperature rise at sea level conditions can be determined from Eq. 3.57.

$$\Delta t = \frac{RQ}{L} \tag{3.57}$$

Given $R = 6$ °C in/watt
$Q = 10/2 = 5$ watts (on half of the PCB)
$L = 5$ in (length of one guide)

$$\Delta t = \frac{(6\ ^\circ\text{C in/watt})(5\ \text{watts})}{5\ \text{in}} = 6^\circ\text{C (rise at sea level)}$$

At an altitude of 100,000 ft, test data and Figure 3.24 show that the resistance across the edge guide will increase about 30%. The temperature rise at this altitude will then be

$$\Delta t = 1.30(6^\circ\text{C}) = 7.8^\circ\text{C (rise)} \tag{3.58}$$

3.20 HEAT CONDUCTION THROUGH SHEET METAL COVERS

Lightweight electronic boxes often use sheet metal covers to enclose the chassis. Sometimes these covers are expected to conduct the heat away

SEC et al. v. MRI
SEC Exhibit 1027.0086
IPR2023-00255

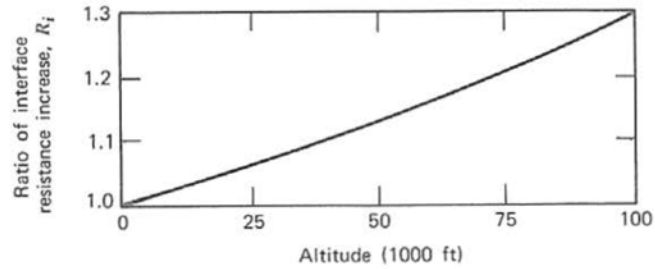

Figure 3.24 Change of board edge guide thermal interface resistance as a function of altitude (types *a–c*, Figure 3.23).

from the chassis for additional cooling. To effectively conduct heat from the chassis to the cover, a flat, smooth, high pressure interface must be provided. The normal surface contact obtained at the interfaces of sheet metal members will not provide an effective heat conduction path. However, if a lip can be formed in the cover or on the side walls of the chassis, the heat conduction path can be substantially improved. Figure 3.25 shows how lips may be formed in the chassis and cover to improve the heat transfer across the interface.

3.21 RADIAL HEAT FLOW

Electronic support structures are not always rectangular in shape. If an electronic system is enclosed within a cylindrical structure, such as a small missile, it would be a waste of space to use a rectangular box for the electronics. The packaging form factor would probably conform to the natural cylindrical shape. Electronic components mounted on the inside surface of a cylindrical chassis would require a radial heat flow path to remove the heat when the heat sink is on the outer surface of the structure. The temperature rise from the inside surface to the outside surface of the

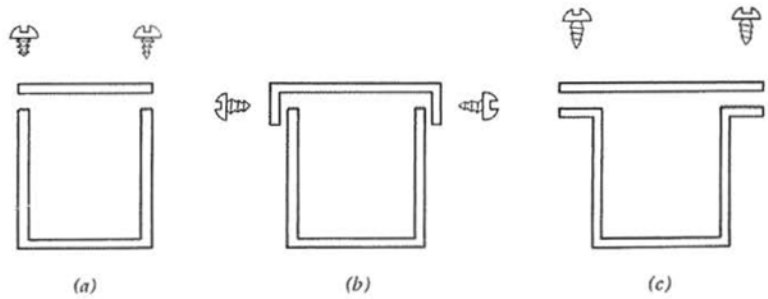

Figure 3.25 Different types of sheet metal covers on electronic boxes. (*a*) Poor; (*b*) good; (*c*) good.

SEC et al. v. MRI
SEC Exhibit 1027.0087
IPR2023-00255

cylindrical structure can be determined from the standard heat flow relation shown by Eq. 3.2 for a concentrated heat load. However, in a radial heat flow system, the cross section area is constantly changing as the radius changes, as shown in Figure 3.26.

An average cross section area can be used to obtain a rough approximation of the temperature rise through the cylindrical wall. If a more accurate evaluation of the temperature rise is desired, the logarithmic mean area must be used, as shown by Eq. 3.59 [15, 17, 24].

$$A_{lm} = \frac{A_{out} - A_{in}}{\log_e(A_{out}/A_{in})} \tag{3.59}$$

When the ratio of A_{out}/A_{in} is less than 2, the average cross section area is within 4% of the logarithmic area.

3.22 SAMPLE PROBLEM—TEMPERATURE RISE THROUGH A CYLINDRICAL SHELL

A hollow steel cylindrical sheel has a group of resistors mounted on the inside surface, as shown in Figure 3.27. Heat is removed from the outside surface of the cylinder, so that the heat flow path is radial through the wall of the cylinder. Determine the temperature rise through the steel cylinder when the power dissipation is 10 watts.

SOLUTION

The logarithmic mean area is determined from Eq. 3.59.

Given

$$A_{out} = \pi D_{out} a = (3.14)(4.2)(1.5) = 19.79 \text{ in}^2 = 0.1374 \text{ ft}^2$$
$$A_{in} = \pi D_{in} a = (3.14)(2.0)(1.5) = 9.42 \text{ in}^2 = 0.0654 \text{ ft}^2$$
$$Q = 10 \text{ watts} = 34.13 \text{ Btu/hr (heat input)}$$
$$K = 24 \text{ Btu/hr ft °F (steel conductivity)}$$
$$A_{lm} = \frac{0.1374 - 0.0654}{\log_e(0.1374/0.0654)} = 0.0970 \text{ ft}^2 \text{ (logarithmic mean area)}$$

Substitute into Eq. 3.2 for the temperature rise through the steel cylin-

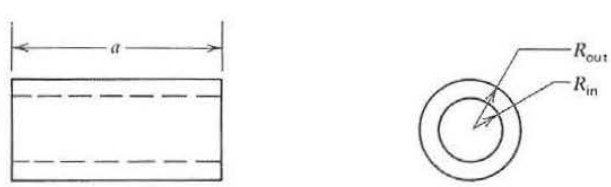

Figure 3.26 Hollow cylinder.

SEC et al. v. MRI
SEC Exhibit 1027.0088
IPR2023-00255

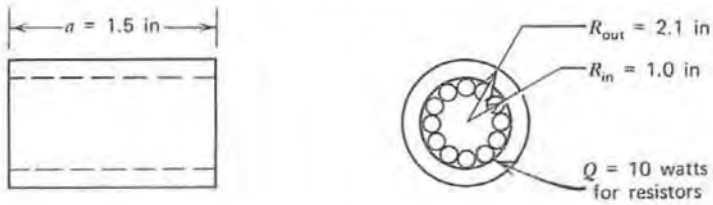

Figure 3.27 Resistors mounted on the inside wall of a hollow cylinder.

drical wall. The length of the heat flow path is the thickness of the steel wall, 1.1 in = 0.0916 ft.

$$\Delta t = \frac{(34.13)(0.0916)}{(24)(0.0970)} = 1.34°\text{F} \tag{3.60}$$

If the average cross section area for radial heat flow through the cylinder is used:

$$A_{av} = \frac{A_{out} + A_{in}}{2} = \frac{0.1374 + 0.0654}{2} = 0.1014 \text{ ft}^2$$

Figure 3.28 Cast chassis with PCBs held by wedge clamps for conduction cooling. (Courtesy Litton Systems, Inc.)

Substitute into Eq. 3.2 for the temperature rise.

$$\Delta t = \frac{(34.13)(0.0916)}{(24)(0.1014)} = 1.28°\text{F} \tag{3.61}$$

In this case there is very little difference in the temperature rise using the logarithmic mean cross section area or the average cross section area for the radial heat flow through the cylinder.

Figure 3.28 shows a rugged cast aluminum chassis with conduction-cooled circuit boards held by wedge clamps.

SEC et al. v. MRI
SEC Exhibit 1027.0090
IPR2023-00255

4

Mounting and Cooling Techniques for Electronic Components

4.1 VARIOUS TYPES OF COMPONENTS

Plug-in types of printed circuit boards (PCBs) have become the standard in the electronics industry. This type of equipment is easy to troubleshoot and maintain. A considerable amount of time and effort has therefore been expended in finding ways to improve the performance and to reduce the cost of PCBs. Many different construction techniques and many different cooling schemes have been devised by the electronic companies involved in the manufacturing of this hardware.

One area that has received a considerable amount of attention is that of mounting electronic components on PCBs. Many different types of components are involved with various shapes and electrical lead wire arrangements. Dual inline packages (DIPs), large scale integrated circuits (LSIs), hybrids, and most recently the microprocessors have been replacing the discrete resistors, capacitors, transistors, and diodes. However, many discrete components are still being used because of their low costs [29].

No matter which groups of components are used for an electronic system, the mounting techniques must provide sufficient cooling to permit the device to operate effectively in its environment. The best method for determining the effectiveness of any cooling system appears to be in the measurement of the case and the junction temperatures of the individual electronic components. Experience has shown that excessive component case temperatures will result in rapid electronic failures. Reliability studies have shown that it is not a good practice to exceed case temperatures of 212°F (100°C) for long periods on electrically operating equipment with any of the components mentioned above, or the failure rates will show a large increase.

SEC et al. v. MRI
SEC Exhibit 1027.0091
IPR2023-00255

When the electronic components are to be cooled by conduction, a good heat flow path must be provided from each component to the ultimate heat sink. The ultimate heat sink may simply be the outside ambient air, or it may be a sophisticated liquid cooled heat exchanger. Each segment along the heat flow path must be examined in detail to be sure that the thermal resistance is low enough to ensure the proper cooling [30].

4.2 MOUNTING COMPONENTS ON PCBS

The electronic components are usually the major heat source in electronic systems. For effective cooling of these components, it is necessary to plan in advance the heat flow mechanism and heat flow path from the component to the sink. The method used for mounting components to PCBs cooled by conduction should provide a low thermal resistance from the component to the PCB. Metal heat sinks are often laminated to the PCB because metals have a high thermal conductivity. The two most popular metals are aluminum and copper, which can be laminated in several different ways, as shown in Figure 4.1.

Some types of components, such as DIPs, LSIs, hybrids, and microprocessors, have a large number of electrical lead wires extending from their cases. About half of the heat dissipated by these components may be conducted through the wires, and about half may be conducted through the bodies of each component. Therefore, when provisions are made for mount-

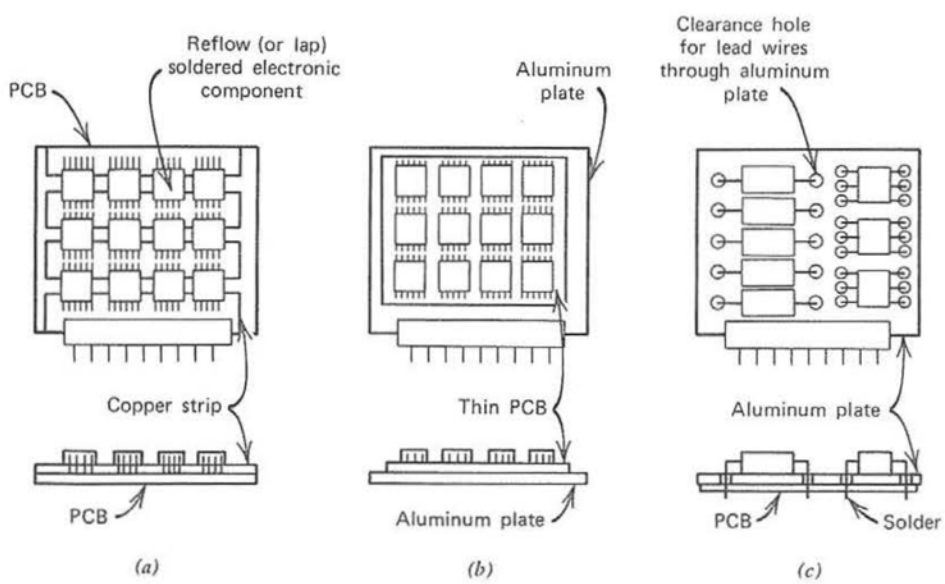

Figure 4.1 Various methods for mounting components on PCBs for conduction cooling. (*a*) Copper strips over PCB and under components; (*b*) aluminum plate bonded to a thin PCB; (*c*) clearance holes in aluminum plate with PCB on back side.

SEC et al. v. MRI
SEC Exhibit 1027.0092
IPR2023-00255

ing these components on PCBs, adequate attention should be given to the heat flow through the wires. For example, if the mounting method shown in Figure 4.1*b* is used, plated throughholes should be located in every pad that has a soldered lead connection. Plated throughholes will reduce the thermal resistance through the PCB, which will reduce the temperature rise from the component to the aluminum heat sink plate. Plated throughholes will also prevent the pads from lifting off the PCB, when the components are soldered to the pads on a lap-soldered joint.

The body of the component with a high heat dissipation (greater than about 4 watts/in^2) should be fastened to the PCB so that there is a low thermal resistance path from the body of the component to the heat sink plate. Many different adhesives can be used, such as RTV cements, double-back tape (Mylar or Kapton), epoxies, or just the adhesive quality of a conformal coating if it is used to protect the PCB. The heat flow from the components to the ultimate heat sink should then follow a predetermined path similar to the one shown in Figure 4.2 [9, 29–31].

Some type of adhesive should be used under high power components mounted on the PCB. If no adhesive is used and only an air gap exists, it is very difficult to control the size of the gap. A small air gap may grow into a large air gap after the PCB has been handled by several people. As the uncontrolled air gap grows, the thermal resistance also grows. This increases the temperature rise across the gap, which increases the component case temperatures.

Tests were run on several different types of carbon composition resistors, which were mounted on heat sinks using different mounting methods. The thermal resistance from the top surface of the resistors to the aluminum heat sink immediately under the resistors is shown in Table 4.1.

Tests were also run on $\frac{1}{4} \times \frac{1}{4}$ in flat pack integrated circuits mounted on a 0.005 in thick PCB which was laminated to an aluminum heat sink using a 0.003 in thick prepreg cement, making a total PCB thickness of 0.008 in. The results are shown in Table 4.2.

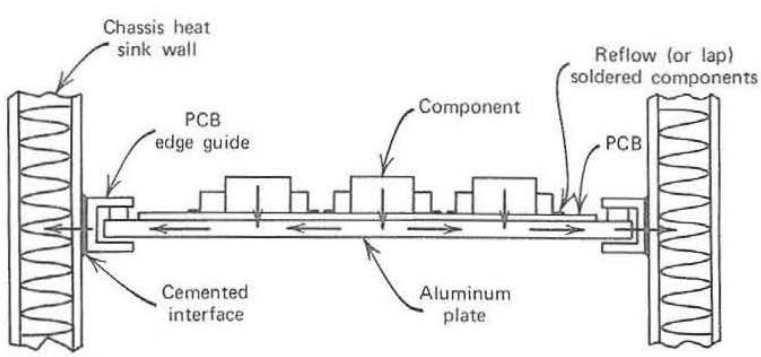

Figure 4.2 Conduction heat flow path from component to heat sink.

SEC et al. v. MRI
SEC Exhibit 1027.0093
IPR2023-00255

Table 4.1 Thermal Resistance for Resistors Mounted on an Aluminum Heat Sink

Component	Interface Cemented with Humiseal Conformal Coating	Resistance with No Cement
$\frac{1}{4}$ watt Resistor RC 07	46.2°C/watt	75°C/watt
$\frac{1}{2}$ watt Resistor RC 20	34.2°C/watt	58°C/watt
1 watt Resistor RC 32	19.1°C/watt	26°C/watt

Epoxy adhesives under components should be avoided if extensive repairs are anticipated on the PCB. Components cemented with epoxy adhesives are extremely difficult to remove without damaging the PCB. Other adhesives, such as RTVs, should be used if repairs are required.

Double-sided Mylar tapes work well for holding components to the PCB. However, cleaning solvents normally used to clean the solder flux off of the lamina will dissolve some of the Mylar adhesive and wash it away. At least half of the adhesive can be lost due to cleaning solvents. Pull tests should be run on components that use double-back Mylar tape, to make sure most of the solvent has not been washed away. A minimum pull force of at least 15 psi should be required in the vertical direction (perpendicular to the PCB) for acceptance. This means that a component with a body size of 1 by 1 in should be capable of withstanding a straight vertical pull force of 15 pounds perpendicular to the plane of the PCB.

Table 4.2 Thermal Resistance from Integrated Circuit Case, through 0.008 in Thick Epoxy Fiberglass Lamina, to Aluminum Heat Sink Plate

Component	Resistance with Cement under Component	Resistance with Air Gap under Component
$\frac{1}{4} \times \frac{1}{4}$ in flat pack	20°C/watt with 0.001 in Humiseal conformal coat	—
$\frac{1}{4} \times \frac{1}{4}$ in flat pack	29°C/watt with 0.003 in thick double-sided Mylar tape	60°C/watt with 0.005 in air gap
$\frac{1}{4} \times \frac{1}{4}$ in flat pack	30°C/watt with 0.002 in thick RTV adhesive over 0.004 in thick Stycast epoxy, which insulates copper runs on PCB	35°C/watt with 0.001 in air gap over 0.004 in thick Stycast epoxy, which insulates copper runs on PCB

SEC et al. v. MRI
SEC Exhibit 1027.0094
IPR2023-00255

Extra plated throughholes should be used under the bodies of high power dissipating components mounted on PCBs that are cooled by conduction. The plated throughholes have a small cylindrical ring of copper, which is a good heat conductor. This can decrease the thermal resistance through the PCB lamina as much as 25% in many cases. A lower thermal resistance means a lower component case temperature.

Low power dissipating components may not require any type of adhesive for fastening the components to the PCB. It may be possible to use an air gap under the components if the height of the gap can be controlled to a value less than about 0.005 in. Test data in Table 4.2 show the thermal resistance across an air gap of 0.005 in (including an 0.008 in thick epoxy fiberglass lamina) is 60°C/watt.

When the power dissipation of a $\frac{1}{4} \times \frac{1}{4}$ inch integrated circuit is only 0.10 watt, the temperature rise across the 0.005 in air gap (and the 0.008 in lamina) will only be about 6°C. If this is acceptable, a substantial sum of money may be saved in the fabrication of these PCBs [32].

PCBs with air gaps under the components must not be used for very high altitude or for space applications. There is no heat conduction across an air gap in a vacuum.

4.3 SAMPLE PROBLEM—HOT SPOT TEMPERATURE OF AN INTEGRATED CIRCUIT ON A PLUG-IN PCB

An electronic chassis, with many plug-in types of PCBs, is to be bolted to a liquid cooled cold plate because the system must be capable of operating at an altitude of 100,000 ft (30,480 m). Conduction cooling is the only reliable method of cooling, because natural convection is sharply reduced at high altitudes. In addition, there are other warm electronic boxes in the same equipment bay, which will prevent effective cooling by radiation. The PCBs will be populated with flat pack integrated circuits. These will be uniformly distributed, with a total power dissipation of 8 watts for each board, as shown in Figure 4.3. Components are mounted on both sides of a PCB which has an aluminum heat sink core at the center. The maximum allowable component case temperature is 212°F (100°C). Determine if the proposed design is satisfactory.

SOLUTION

The hot spot case temperature on the flat pack IC can be determined by calculating the temperature rise along individual segments of the heat flow path from the components to the liquid cooled cold plate heat sink. The heat flow path is broken up into five individual segments as follows:

Δt_1 = temperature rise from integrated circuit (IC) case through an 0.008

SEC et al. v. MRI
SEC Exhibit 1027.0095
IPR2023-00255

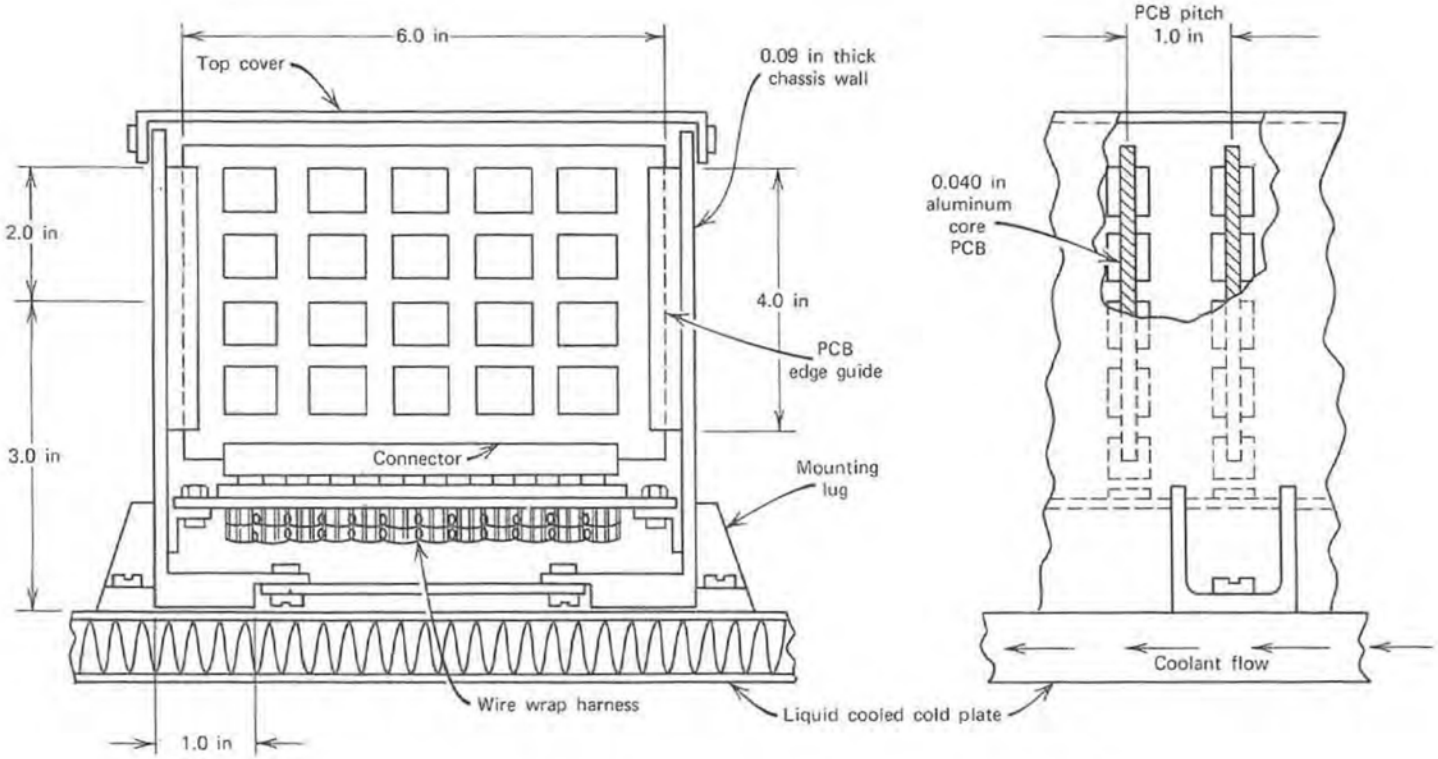

Figure 4.3 Cross section through a chassis with flat pack integrated circuits on PCBs.

SEC et al. v. MRI
SEC Exhibit 1027.0096
IPR2023-00255

in (0.020 cm) thick PCB lamina, plus an air gap of 0.005 in (0.013 cm) under IC case

Δt_2 = temperature rise from center of aluminum heat sink core on circuit board to sides of heat sink by edge guide

Δt_3 = temperature rise across board edge guide from heat sink core to chassis side wall, including cemented interface from guide to wall at 100,000 ft

Δt_4 = temperature rise down along the chassis side wall from the board edge guide to the base of the chassis

Δt_5 = temperature rise across the bolted interface from the base of the chassis to the liquid cooled cold plate at 100,000 ft

The various temperature rises are determined for each of the five segments, using English units and metric units.

All the PCBs in the chassis are very similar and all are on a 1 in pitch. For convenience, therefore, at 1.0 in (2.54 cm) chassis width is analyzed together with one typical PCB.

Δt_1: This represents the temperature rise across the 0.008 in thick PCB lamina to the aluminum core for a single integrated circuit (IC) component that dissipates 0.20 watt. To reduce manufacturing costs, the ICs will *not* be cemented to the PCB. Instead, a 0.005 in air gap will be allowed under the component. This will be controlled by forming the electrical lead wires in a forming die. The ICs will be lap soldered to the printed circuits on the laminated board. The thermal resistance from the component to the aluminum center core, which includes the 0.008 in lamina and the 0.005 in air gap, is obtained from Table 4.2.

$$\Delta t_1 = 60 \frac{°\text{C}}{\text{watt}} \times 0.20 \text{ watt} = 12°\text{C} = 21.6°\text{F} \tag{4.1}$$

Δt_2: This represents the temperature rise along the aluminum core from the center of the board to the sides, for a uniformly distributed heat load of 8.0 watt, on both sides of the PCB. Since the heat load is symmetrical, each half of the heat sink can be considered separately, as shown in Figure 4.4. The following information is required.

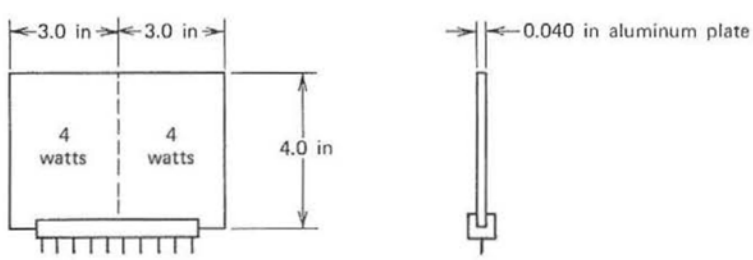

Figure 4.4 Aluminum PCB heat sink core.

SEC et al. v. MRI
SEC Exhibit 1027.0097
IPR2023-00255

Given $Q = 4.0$ watts $= 13.65$ Btu/hr $= 0.956$ cal/sec (heat input on half a board)
$L = 3.0$ in $= 0.25$ ft $= 7.62$ cm (length)
$K = 83$ Btu/hr ft °F $= 0.343$ cal/sec cm °C (aluminum conductivity)
$A = (4)(0.04) = 0.16$ in^2 $= 0.00111$ ft^2 $= 1.03$ cm^2 (area)

Substitute into Eq. 3.9 for the Δt from the center of the board heat sink to the side edge, in English units.

$$\Delta t_2 = \frac{(13.65 \text{ Btu/hr})(0.25 \text{ ft})}{(2)(83 \text{ Btu/hr ft °F})(0.00111 \text{ ft}^2)} = 18.5°\text{F} \tag{4.2}$$

In metric units:

$$\Delta t_2 = \frac{(0.956 \text{ cal/sec})(7.62 \text{ cm})}{(2)(0.343 \text{ cal/sec cm °C})(1.03 \text{ cm}^2)} = 10.3°\text{C} \tag{4.2a}$$

Δt_3: This represents the temperature rise across the board edge guide from the aluminum PCB core to the side wall of the chassis, using the Birtcher-type edge guide shown in Figure 3.23*a*.

$$\Delta t_3 = \left(12 \frac{°\text{C in}}{\text{watt}}\right)\left(\frac{4 \text{ watts}}{4 \text{ in}}\right) = 12°\text{C (at sea level)}$$

At an altitude of 100,000 ft this resistance across the edge guide increases about 30%, as shown in Figure 3.24.

$$\Delta t_3 = 1.3(12°\text{C}) = 15.6°\text{C} = 28.1°\text{F} \tag{4.3}$$

Δt_4: This represents the temperature rise along the side of the chassis wall down to the bottom surface of the chassis. The temperature rise can be calculated as (a) a concentrated heat load down the side of the chassis or as (b) a combination of a uniformly distributed heat load and a concentrated heat load down the side of the chassis. Both methods will give the same results. The PCBs are on a 1.0 in (2.54 cm) pitch, so that a 1.0 in section of the chassis is analyzed.

(a) *Concentrated Heat Load.* For the concentrated heat load down the side of the chassis, the length of the heat flow path is taken from the center of the PCB to the center of the bottom flange, as shown in Figure 4.5.

$Q = 4$ watts $= 13.65$ Btu/hr $= 0.956$ cal/sec (heat; ref. Table 1.1)
$L = 3.5$ in $= 0.292$ ft $= 8.89$ cm (length)
$K = 83$ Btu/hr ft °F $= 0.343$ cal/sec cm °C (thermal conductivity; ref. Table 3.2)
$A = (1.0)(0.09) = 0.090$ in^2 $= 0.000625$ ft^2 $= 0.581$ cm^2 (area)

SEC et al. v. MRI
SEC Exhibit 1027.0098
IPR2023-00255

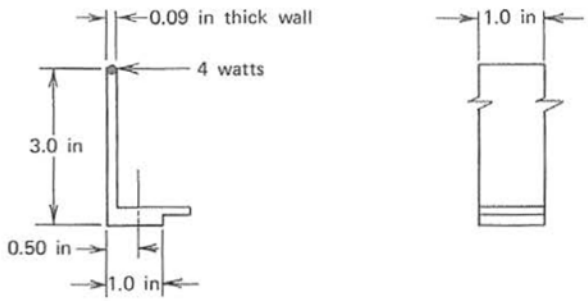

Figure 4.5 Concentrated heat load on side wall of the chassis.

Substitute into Eq. 3.2 for the temperature rise in English units.

$$\Delta t_{4a} = \frac{(13.65)(0.292)}{(83)(0.000625)} = 76.8°\text{F} \tag{4.4}$$

In metric units:

$$\Delta t_{4a} = \frac{(0.956)(8.89)}{(0.343)(0.581)} = 42.6°\text{C} \tag{4.4a}$$

(b) *Uniform Heat Load with Concentrated Heat Load.* For the combination of a uniformly distributed heat load and a concentrated heat load down the side of the chassis, the uniform load acts only on the upper section of the chassis, as shown in Figure 4.6.

Using Eqs. 3.9 for the uniform heat load, and 3.2 for the concentrated

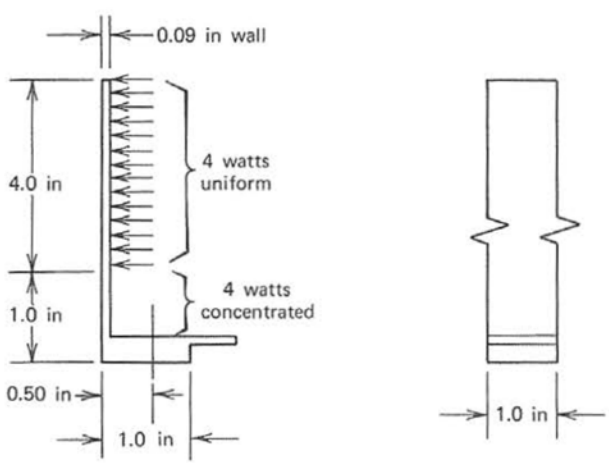

Figure 4.6 Uniform heat load combined with a concentrated heat load.

SEC et al. v. MRI
SEC Exhibit 1027.0099
IPR2023-00255

heat load:

$$\Delta t_{4b} = \frac{(13.65)(4.0/12)}{(2)(83)(0.000625)} + \frac{(13.65)(1.5/12)}{(83)(0.000625)}$$

$$\Delta t_{4b} = 43.9 + 32.9 = 76.8°\text{F} \tag{4.5}$$

The results agree with Eq. 4.4

Δt_5: This represents the temperature rise across the interface from the chassis to the liquid cooled cold plate, for a section of the chassis that is 1 in wide. If the mounting bolts are spaced far apart on sheet metal structures, the average interface pressure will be quite low, so that the average interface conductance will also be quite low. For an air interface at sea level conditions, Table 3.6 shows a value of 200 Btu/hr ft² °F. At an altitude of 100,000 ft, the temperature rise will increase about 30%.

Q = 4 watts = 13.65 Btu/hr = 0.956 cal/sec (heat)
h_i = 200 Btu/hr ft² °F = 0.027 cal/sec cm² °C (interface conductance)
A = (1.0)(1.0) = 1.0 in² = 0.00694 ft² = 6.45 cm² (area)

Substitute into Eq. 3.53 for an altitude of 100,000 ft, in English units.

$$\Delta t_5 = \frac{(1.30)(13.65)}{(200)(0.00694)} = 12.8°\text{F} \tag{4.6}$$

In metric units at the high altitude:

$$\Delta t_5 = \frac{(1.30)(0.956)}{(0.027)(6.45)} = 7.1°\text{C} \tag{4.6a}$$

The hot spot temperature at the mounting interface of the integrated circuits (ICs) at the center of the PCB can be determined from the 80°F (26.6°C) cold plate temperature and the sum of all the individual temperature rises in the heat flow path from the ICs to the cold plate. In English units:

$$t_{IC} = 80 + \Delta t_1 + \Delta t_2 + \Delta t_3 + \Delta t_4 + \Delta t_5 \tag{4.7}$$

$$t_{IC} = 80 + 21.6 + 18.5 + 28.1 + 76.8 + 12.8 = 237.8°\text{F} \tag{4.8}$$

In metric units:

$$t_{IC} = 26.6 + 12 + 10.3 + 15.6 + 42.6 + 7.1 = 114.2°\text{C} \tag{4.8a}$$

For a reliable electronic system, the maximum component surface temperature should not exceed 212°F (100°C). The design is therefore unsatis-

SEC et al. v. MRI
SEC Exhibit 1027.0100
IPR2023-00255