Trials@uspto.gov
571-272-7822

Paper 61
Date: July 17, 2024

UNITED STATES PATENT AND TRADEMARK OFFICE

---

BEFORE THE PATENT TRIAL AND APPEAL BOARD

---

SAMSUNG ELECTRONICS CO., LTD. and
SAMSUNG ELECTRONICS AMERICA, INC.,
Petitioner,

v.

MANUFACTURING RESOURCES INTERNATIONAL, INC.,
Patent Owner.

---

IPR2023-00255
Patent 9,629,287 B2

---

Before JAMESON LEE, JO-ANNE M. KOKOSKI, and
JOHN A. HUDALLA, *Administrative Patent Judges.*

KOKOSKI, *Administrative Patent Judge*.

JUDGMENT
Final Written Decision
Determining Some Challenged Claims Unpatentable
*35 U.S.C. § 318(a)*

# I. INTRODUCTION

We have jurisdiction to conduct this *inter partes* review under 35 U.S.C. § 6, and issue this Final Written Decision pursuant to 35 U.S.C. § 318(a). For the reasons that follow, we determine that Samsung Electronics Co., Ltd. and Samsung Electronics America, Inc. (collectively, "Petitioner" or "Samsung") show by a preponderance of the evidence that claims 1, 4, 5, 8, and 10–23 of U.S. Patent No. 9,629,287 B2 ("the '287 patent," Ex. 1001) are unpatentable, and does not show by a preponderance of the evidence that claim 9 of the '287 patent is unpatentable.

## *A. Procedural Background*

Petitioner filed a Corrected Petition to institute an *inter partes* review of claims 1, 4, 5, and 8–23 (the "challenged claims") of the '287 patent. Paper 9 ("Pet."). Manufacturing Resources International, Inc. ("Patent Owner" or "MRI") filed a Preliminary Response. Paper 7. Pursuant to 35 U.S.C. § 314(a), we instituted an *inter partes* review of claims 1, 4, 5, and 8–23 on the grounds advanced in the Petition. Paper 11 ("Institution Decision" or "Dec."), 8, 45–46. After institution of trial, Patent Owner filed a Patent Owner Response ("PO Resp.," Papers 19 (confidential), 35 (redacted)), Petitioner filed a Reply ("Pet. Reply," Papers 32 (confidential), 37 (redacted)), and Patent Owner filed a Sur-reply ("PO Sur-reply," Paper 44).

We held an oral hearing on April 24, 2024, and a transcript is included in the record. Paper 60.

## *B. Real Parties in Interest*

Petitioner identifies Samsung Electronics Co., Ltd., Samsung Electronics America, Inc., Samsung SDS Co., Ltd., Samsung SDS America,

Inc., Coates Signco Pty Limited, Coates US Inc., and Industrial Enclosure Corporation d/b/a Palmer Digital Group as the real parties-in-interest. Pet. 2. Patent Owner identifies itself as the real party-in-interest. Paper 5, 2 (Mandatory Notice).

*C. Related Matters*

The parties indicate that the '287 patent is at issue in *Manufacturing Resources Int'l, Inc. v. Samsung Electronics Co., Ltd.*, No. 2:22-cv-00320 (E.D. Tex.) and *In re Certain Outdoor and Semi-Outdoor Electronic Displays, Products Containing Same, and Components Thereof*, Investigation No. 337-TA-1331 (ITC). Pet. 2; Paper 5, 2. Petitioner also indicates that the '287 patent was at issue in *Manufacturing Resources Int'l, Inc. v. Civiq Smartscapes, LLC*, No. 17-269-RGA (D. Del.) ("the Civiq proceeding."). Pet. 3. Patent Owner additionally identifies several other *inter partes* reviews that "may be deemed related" to this proceeding. Paper 5, 2.

*D. The '287 Patent*

The '287 patent relates to cooling systems for electronic displays. Ex. 1001, 1:58–59. The Specification explains that "cooling devices for electronic displays in the past have generally used convective heat dissipation systems that function to cool an entire interior of the display by one or more fans and fins," and "[b]y itself, this is not adequate in many climates, especially when radiative heat transfer from the sun through a display window becomes a major factor." *Id.* at 2:3–9. "Additionally, modern applications call for larger displays than previous applications." *Id.* at 2:11–12. The Specification further explains that, "[w]ith increased heat production from the larger screens and radiative heat transfer from the sun

through the display window, more efficient and powerful heat dissipation systems are required." *Id*. at 2:14–17.

The '287 patent addresses these issues by providing "an isolated gas cooling system and method for cooling an electronic display." Ex. 1001, 2:37–39. In particular, the Specification teaches that "[t]he gas cooling chamber is preferably a closed loop which includes a first gas chamber comprising a transparent anterior plate and a second gas chamber comprising a cooling plenum." *Id*. at 2:40–43.

Figure 1 is reproduced below.

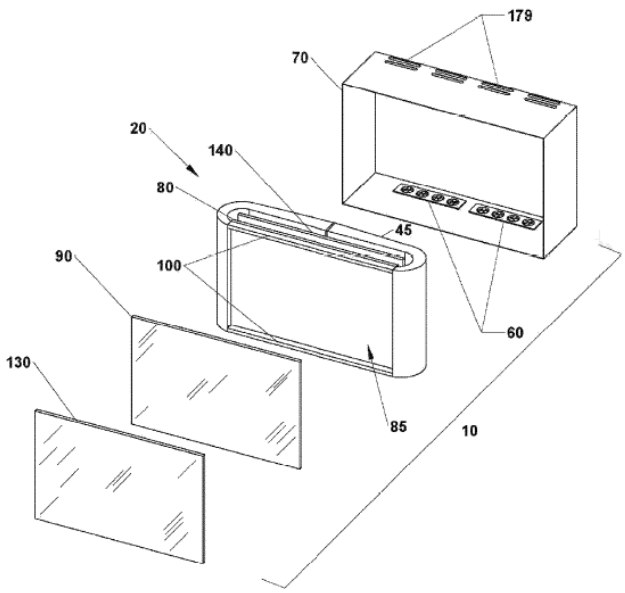


Fig. 1

Figure 1 is an exploded perspective view showing the components of an isolated gas cooling system described in the '287 patent. Ex. 1001, 3:20–22. Gas cooling system 10 includes isolated gas cooling chamber 20 contained within electronic display housing 70, which also includes fan 60 and exhaust 179. *Id*. at 3:51–54, 5:13–16. Electronic display surface 85, spacers 100, and transparent front plate 90 define a narrow first gas

chamber 30 (not pictured). *Id*. at 4:36–38. Second transparent front plate 130 is laminated to front plate 90 to prevent breakage of transparent front plate 90. *Id*. at 3:55–57. Cooling chamber 20 surrounds electronic display 80[1] and associated backlight panel 140. *Id*. at 3:57–60. Cooling plenum 45 includes fan 60 positioned at the base of display housing 70. *Id*. at 3:61–64.

Figure 2 is reproduced below.

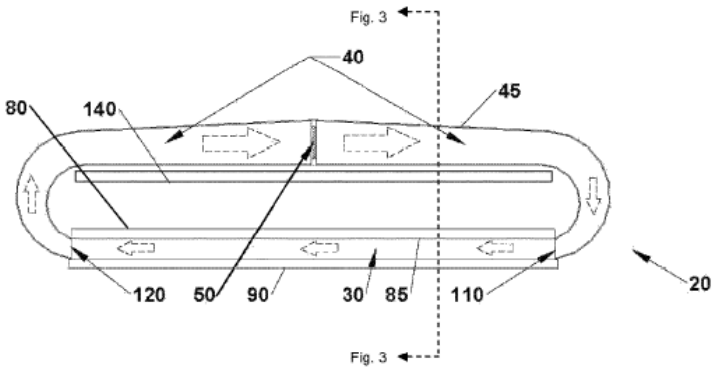


Fig. 2

Figure 2 is a top sectional view of a cooling chamber described in the '287 patent. Ex. 1001, 3:23–24. Cooling chamber 20 comprises a closed loop that includes first gas chamber 30 and rear cooling chamber 40. *Id*. at 4:4–7. Cooling plenum 45 includes cooling chamber fan 50, which propels gas around the closed loop of cooling chamber 20. *Id*. at 4:25–28. First gas chamber 30 is in gaseous communication with cooling plenum 45 through entrance opening 110 and exit opening 120. *Id*. at 4:39–41.

[1] The Specification teaches that the described gas cooling system "may be used in conjunction with displays selected from among LCD (including TFT or STN type), light emitting diode (LED), organic light emitting diode (OLED), field emitting display (FED), cathode ray tube (CRT) and plasma displays." Ex. 1001, 3:36–42.

The Specification teaches that, in operation, the gas passes through the first gas chamber, contacts the electronic display surface, and absorbs the heat from the surface of the display. Ex. 1001, 2:51–53. Then, it is directed into the rear cooling plenum. *Id*. at 2:55–57. To cool the gas in the plenum, "an external fan unit may be positioned to provide a flow of ingested air over the external surfaces of the plenum. The heated air in the housing may exit the housing as exhaust." *Id*. at 2:61–64.

*E. Challenged Claims*

Petitioner challenges claims 1, 4, 5, and 8–23 of the '287 patent. Pet. 5. Claims 1, 12, 18, and 21 are independent, illustrative of the claimed subject matter, and reproduced below.

> 1. An electronic display assembly comprising:
>
> an electronic display housing;
>
> a gas-containing closed loop gas cooling chamber located within the electronic display housing;
>
> an electronic display positioned within the electronic display housing but outside the closed loop gas cooling chamber; and
>
> an open loop ambient air pathway through the electronic display housing;
>
> wherein the electronic display is coolable by a combination of gas circulation within the closed loop gas cooling chamber and ambient air flow through the open loop ambient air pathway in the electronic display housing.

Ex. 1001, 6:8–21.

> 12. An electronic display assembly comprising:
>
> a housing;
>
> a liquid crystal display (LCD) positioned within the housing and having a backlight;

> wherein the electronic display is coolable by a combination of a closed loop of isolated gas which circulates within the housing and an open loop of ambient air which passes through the housing and along the backlight.

*Id*. at 7:5–13.

> 18. An electronic display assembly comprising:
>
> a housing;
>
> an electronic display positioned within the housing;
>
> a rear cooling chamber positioned behind the electronic display and containing an electrical component which is electrically connected to the electronic display;
>
> a front surface on the electronic display which faces an intended viewer and a rear surface on the electronic display which opposes the front surface;
>
> wherein the front surface of the electronic display is coolable by a closed loop of isolated gas and the rear surface of the electronic display is coolable by an open loop of ambient air.

*Id*. at 7:35–8:4.

> 21. An electronic display assembly comprising:
>
> an electronic display housing;
>
> an open loop ambient air pathway through the electronic display housing; and
>
> an electronic display positioned within the electronic display housing such that the electronic display is isolated from the closed loop of cooling gas but contactable by ambient air flowing through the open loop ambient air pathway;
>
> wherein the electronic display is coolable by a combination of closed loop cooling gas circulation within the electronic display housing, and ambient air flow through the open loop ambient air pathway in the electronic display housing.

*Id*. at 8:13–29.

*F. Evidence*

Petitioner relies on the evidence listed below (Pet. 4–5, 13–27):

| Name | Reference | Date | Exhibit No. |
|---|---|---|---|
| Harris | US 5,748,269 | May 5, 1998 | 1018 |
| Nagashima | US 6,798,655 B2 | Sept. 28, 2004 | 1007 |
| Kitamura | JP H8-54834 | Feb. 27, 1996 | 1017 |
| Marumoto | JP H8-152604 | June 11, 1996 | 1005 (as translated)<br>1010 |
| Ohta | JP 3118907 | Oct. 13, 2000 | 1004 (as translated)<br>1009 |
| Yare | GB 2402205A | Dec. 1, 2004 | 1013 |
| Karppanen | WO 2007/116116 A1 | Oct. 18, 2007 | 1006 |

Petitioner also relies on the Declaration of Robert Smith-Gillespie ("Smith-Gillespie Declaration," Ex. 1002). Pet. 6. Patent Owner relies on the Declaration of Dr. Himanshu Pokharna (Ex. 2024).

*G. Asserted Grounds*

Petitioner asserts that claims 1, 4, 5, and 8–23 are unpatentable based on the following grounds (Pet. 5):

| Claim(s) Challenged | 35 U.S.C. § | Reference(s)/Basis |
|---|---|---|
| 12–23 | 103[2] | Karppanen |
| 1, 4, 5, 8–12, 14–17, 21–23 | 103 | Nagashima, Karppanen |
| 1, 4, 5, 8–23 | 103 | Ohta, Marumoto |
| 1, 4, 5, 8–83 | 103 | Ohta, Marumoto, Yare |
| 12–20 | 103 | Kitamura, Harris |

[2] The Leahy-Smith America Invents Act ("AIA"), Pub. L. No. 112–29, 125 Stat. 284 (2011), revised 35 U.S.C. §§ 102 and 103 effective March 16, 2013. Petitioner argues, and Patent Owner does not contest, that the pre-AIA statutory provisions apply to this case. *See* Pet. 13, 14, 16, 18, 19, 22, 25. Accordingly, we apply the pre-AIA versions of §§ 102 and 103.

## II. ANALYSIS

### *A. Level of Ordinary Skill in the Art*

Petitioner contends that a person of ordinary skill in the art ("POSITA") "would have possessed a bachelor's degree in a pertinent discipline, such as mechanical engineering, physics, product design, or a related field" and "2–4 years of experience in working with electronic displays and have an understanding of product design issues and failure modes associated with electronic displays." Pet. 7 (citing Ex. 1002 ¶ 37). In the alternative, Petitioner argues that "a POSITA would have had 5–7 years of experience in the field working with electronic displays and have a similar understanding of product design issues and failure modes associated with electronic displays." *Id.* (citing Ex. 1002 ¶ 37).

Patent Owner argues that a POSITA "would possess a bachelor's degree in a pertinent discipline, such as mechanical or electrical engineering, physics, applied physics, or a related field" with "2–4 years of experience in working with electronic displays including thermal management associated with electronic displays." PO Resp. 6 (citing Ex. 2024 ¶ 27). Alternatively, Patent Owner argues that "a POSITA would have had 4–6 years of experience in the field and would have developed a similar understanding of thermal management associated with electronic displays." *Id.* (citing Ex. 2006 ¶ 27).

Patent Owner argues:

> Under Samsung's definition, a POSITA must have only a generalized knowledge of "product design issues and failure modes associate with electronic displays." [Pet. 11]. This definition is overly inclusive, and sweeps in individuals who fall short of the ordinary skill necessary to understand the issues underlying the thermal management systems disclosed in

> the '287 Patent, including individuals who design the external housing of displays (e.g., bus shelters), electrical outlets of the display, or computer hardware. Ex. 2024, ¶ 29. Such mechanisms are not components of the cooling system for electronic displays.

PO Resp. 6–7. We do not discern a meaningful difference between the definitions of Petitioner and Patent Owner. In a deposition in the related ITC proceeding, Mr. Smith-Gillespie was asked the following question by Patent Owner's counsel:

> When you refer to a degree in product design, are you referring to a degree in industrial design, or are you referring to some type of engineering degree?

Ex. 2022, 72:2–5.

Mr. Smith-Gillespie answered as follows:

> I would say product design is more of an engineering-type discipline, which would be inclusive of mechanical and electrical design. There are degree programs like that.

Ex. 2022, 72:6–9. With that understanding of "product design," the two definitions, insofar as formal education is concerned, are essentially the same.

With regard to experience, the suggested distinction between Patent Owner's language "thermal management associated with electronic displays" and Petitioner's language "failure modes associated with electronic displays" is not supported by meaningful explanation and is at best inconclusive.

Patent Owner also argues that Mr. Smith-Gillespie contradicted himself regarding his alleged inclusion of "industrial design" as a suitable education background:

> In his declaration, Smith-Gillespie opines that the definition of a POSITA includes an industrial designer. *See* Ex. 1002 ¶39. However, when deposed in February, two months after submitting his declaration, Smith-Gillespie stated that he no

> longer believed that an industrial designer fell within the scope of an ordinarily skilled artisan in the field of art. *See* Ex 2022, 73:3–7 ("Q. Okay. So an industrial designer, as we just described, would not qualify based on that educational background as a person of ordinary skill in the art, under your definition; is that right? A. That's correct.").

PO Resp. 7. The problem with Patent Owner's argument is that in his declaration Mr. Smith-Gillespie refers to a degree in "product design," not "industrial design." Ex. 1002 ¶ 39. Thus, there is no inconsistency.

We adopt Petitioner's articulation of the level of ordinary skill in the art. This determination of the level of ordinary skill in the art is consistent with what is reflected by the content of the applied prior art references. *Cf. Okajima v. Bourdeau*, 261 F.3d 1350, 1354–55 (Fed. Cir. 2001) (the applied prior art may reflect an appropriate level of skill). Further, our determination regarding Petitioner's challenge does not turn on the differences between Petitioner's and Patent Owner's proposed definitions, however, and we note that our conclusion would be the same under either definition.

*B. Claim Construction*

We construe each claim "in accordance with the ordinary and customary meaning of such claim as understood by one of ordinary skill in the art and the prosecution history pertaining to the patent." 37 C.F.R. § 42.100(b). Under this standard, claim terms are generally given their plain and ordinary meaning as would have been understood by a person of ordinary skill in the art at the time of the invention and in the context of the entire patent disclosure. *Phillips v. AWH Corp.*, 415 F.3d 1303, 1313 (Fed. Cir. 2005) (en banc). Only those terms in controversy need to be construed, and only to the extent necessary to resolve the controversy. *Realtime Data LLC v. Iancu*, 912 F.3d 1368, 1375 (Fed. Cir. 2019).

Petitioner proposes constructions for the terms "closed loop," "open loop," "rear surface of the electronic display," "between," and "open loop of ambient air which passes through the housing and along the backlight." Pet. 9–12. Patent Owner provides proposed constructions for the terms "closed loop," "between," and "open loop of ambient air which passes through the housing and along the backlight." PO Resp. 8–10. Based on our review of the complete trial record, the claim construction arguments raised by the parties, and the claim construction orders issued by the Delaware District Court (Ex. 1011; Ex. 1012) and the ITC (Ex. 1034) in related proceedings, we determine that it is necessary to address the claim terms "closed loop of isolated gas" and "along the backlight." To the extent that the scope of any other term requires discussion, we provide it in the following analysis of the challenges.

*1. "closed loop of isolated gas"*

Petitioner proposes that we adopt the Delaware District Court's construction of "closed loop" and "closed gaseous loop" from the Civiq proceeding, namely, a "gas pathway within a display housing containing gas that is essentially isolated from external air." Pet. 9 (citing Ex. 1012, 8).

Patent Owner proposes that we adopt the ITC's construction of "closed loop," namely, "a gas pathway forming a complete loop within a display housing." PO Resp. 9 (citing Ex. 1034, 42, 51). In construing "closed loop," the ITC Administrative Law Judge (ALJ) noted that "'[i]solated gas' was defined in the specification to be essentially isolated from external air, . . . and thus, the 'closed loop of isolated gas' . . . must be essentially isolated from external air by virtue of the surrounding claim language." Ex. 1034, 51 (citing Ex. 1001, 4:9–11). Patent Owner echoes

this definition of "isolated gas" in its papers. PO Resp. 10; PO Sur-reply 1–2. Patent Owner additionally states that "'[e]ssentially isolated' does not require the loop to be 'hermetically sealed,' but requires the gas to be 'isolated to the extent that dust and contaminates may not substantially enter the first gas cooling chamber.'" PO Resp. 10–11 (quoting Ex. 1001, 4:19–24); *see also* PO Sur-reply 2 (quoting same).

Notwithstanding, Patent Owner argues that in order "[t]o determine the amount of sealing of an enclosure, a POSITA would look to the Ingress Protection ('IP') rating of an outdoor enclosure to understand the extent to which it is—or should be—isolated from dust and water." PO Resp. 11 (citing Ex. 2023; Ex. 2024 ¶¶ 92–94). Patent Owner further argues that "[a] POSITA would look to an enclosure that meets at least the [IP] level 5 for the first and second digits to know it is sealed to the extent that it is 'substantially free' of dust and contaminates [sic]." *Id.* (citing Ex. 2023; Ex. 2024 ¶ 92). Otherwise, Patent Owner contends "a POSITA would look for explicit statements that the enclosure is sealed from dust or sealed from water." *Id.* at 11–12 (citing Ex. 2024 ¶ 92).

In its Reply, Petitioner argues that "there is no basis, other than conclusory expert testimony, to equate an IP rating with this limitation." Pet. Reply 3 (citing PO Resp. 11–12).

At the outset, we note that the Delaware District Court and the ITC ALJ addressed "isolated gas" in conjunction with their constructions of "closed loop." The resolution of this case does not turn on the construction of "closed loop," and, as such, we need not provide an express construction of "closed loop." *See, e.g.*, *Realtime Data*, 912 F.3d at 1375.

Nevertheless, the parties seemingly agree that an "isolated gas" is a gas that is "essentially isolated from external air." *See* Pet. 9 (advocating for the Delaware District Court construction containing same); PO Resp. 10 (quoting Ex. 1001, 4:9–11). The '287 patent further discloses that "the isolated gas cooling chamber need not necessarily be hermetically sealed from the external air" and that "[i]t is sufficient that the gas in the chamber is isolated to the extent that dust and contaminants may not substantially enter the first gas chamber." Ex. 1001, 4:19–23. These definitional statements in the '287 patent, which we adopt as our construction, are sufficient to dispose of the instituted grounds. We additionally note that these statements are consistent with the constructions of the Delaware District Court and the ITC ALJ. *See* Ex. 1012, 8; Ex. 1034, 51.

Finally, we reject Patent Owner's arguments that the degree of isolation from dust and contaminants must be quantified by, for example, comparison to an IP rating. These arguments find no basis in the intrinsic record.

*2. "along the backlight"*

Claim 12 recites, *inter alia*, "an open loop of ambient air that passes through the housing and along the backlight." Ex. 1001, 7:11–13. Petitioner proposes that "along the backlight" should be construed as "in thermal communication with the backlight." Pet. 11–12. Petitioner bases its construction on certain developments during prosecution of the '287 patent's grandparent application (application No. 14/508,767, now U.S. Patent No. 9,089,079 ("the '079 prosecution")). *Id.* at 12 (citing Ex. 1020, 204, 223); Ex. 1001, code (63). Petitioner contends that "this limitation does not

require the ambient air to contact a surface of the backlight." Pet. Reply 4 (citing Ex. 1020, 204, 223; Ex. 1002 ¶¶ 75–76).

Patent Owner argues that the ITC ALJ rejected Petitioner's argument that "along the backlight" should be construed to mean "in thermal communication with the backlight." PO Resp. 9 (citing Ex. 1034, 54). Patent Owner notes the ALJ's determination that the term "along" was being used "to describe the position of the airflows in relation to the rear surface" of the electronic display and that "along" was a positional term. *Id.* Patent Owner also notes the ALJ's determination that "along" was not associated with the effect of thermal communication. *Id.* As such, Patent Owner advocates for applying the plain and ordinary meaning of "along the backlight." *Id.*; PO Sur-reply 4–5. Patent Owner also argues that an open loop is not "along the backlight" when there are intervening structures between the backlight and the open loop. PO Resp. 17 (citing Ex. 2024 ¶ 101).

We agree with Petitioner that "along the backlight" does not require contact with the surface of the backlight, but disagree that "along the backlight" connotes thermal communication with the backlight. During the '079 prosecution, the Examiner described a prior art reference (Heady) as disclosing "an open loop of cooling air traveling along the rear surface of the backlight where the cooling gas is not permitted to mix with the circulating gas." Ex. 1020, 204. According to the Examiner, "[a]lthough the cooling air is separated from the rear surface, it travels 'along' the surface of the backlight." *Id.*

In response, the applicant amended the claim language "cooling air *traveling along* the rear surface of the LED backlight" to "cooling air

*contacting* the rear surface of the LED backlight." Ex. 1020, 223 (emphasis added). In support of the amendment, the applicant argued that "the Examiner has acknowledged that the open loop of cooling air [in Heady] does not contact the rear surface of the LED backlight, since the cooling gas 'is separated from the rear surface' of the backlight." *Id*. at 226. The Examiner used the word "along" to describe the position of the airflow in relation to the rear surface of the backlight, with the recognition that contact with the rear surface is not required. Thus, the '079 prosecution does not support interpreting "along the backlight" as requiring "thermal communication with the backlight."

This understanding is also consistent with the disclosures in the '287 patent. The '287 patent describes embodiments where fans are used "to draw air between" the backlight and the rear cooling chamber to increase "the cooling abilities of the system." Ex. 1001, 4:46–54; *see also id*. at 5:18–22 (fan is used "to push air between" the backlight and the rear cooling chamber), 5:29–33 (rear cooling chamber contains a guiding feature "to facilitate the flow of air between the backlight and the cooling chamber"). These disclosures in the '287 patent indicate the position of the airflow, i.e., along the backlight, not just having "thermal communication" with the backlight.

Accordingly, we determine that, in the "open loop of ambient air which passes through the housing and along the backlight" limitation of claim 12, "along the backlight" indicates the position of the airflow relative to the backlight and does not require contact with the backlight, and is not met merely by having thermal communication.

*C. Asserted Obviousness over Karppanen*

Petitioner contends that claims 12–23 would have been obvious over Karppanen. Pet. 26–46.

*1. Overview of Karppanen*

Karppanen "relates to an electronic information board comprising a frame, a flat display element for presenting information and electronic equipment for controlling the display element." Ex. 1006, 1:3–5. Karppanen explains that "[t]he basic idea of the invention is that the display element and the electronics required for controlling the display are located separately from each other for facilitating the arrangements for temperature control and cooling of the information board." *Id*. at 3:23–26. Karppanen further explains that, "[a]s a result, the information board has a modular structure, which also facilitates the maintenance and updating of the device." *Id*. at 3:26–28.

Figure 2 is reproduced below.

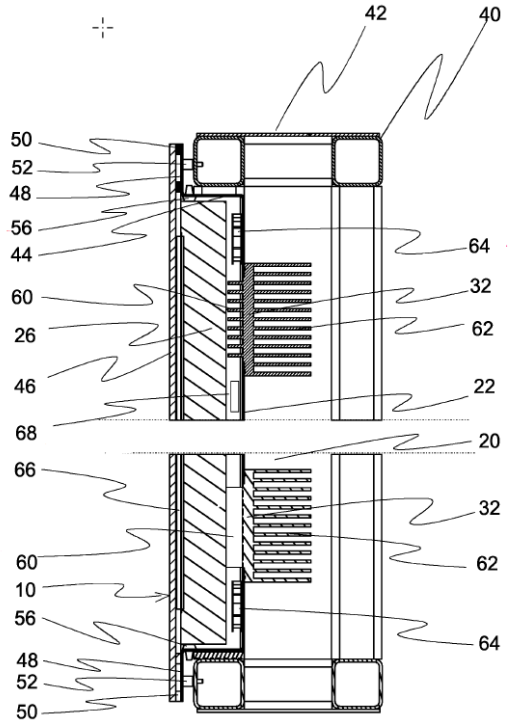


Fig. 2

Figure 2 is a cross-sectional drawing of an electronic information board described in Karppanen. The information board has frame 40 to an edge of which is fastened lining plate 42. Ex. 1006, 7:27–30. Display casing 10 comprises backwall 22, transparent front plate 46, and edge part 44. *Id*. at 7:31–32. Edge part 44 has flange-like fastening collar 48 running in the direction of the front plate and is fastened to the frame by fastening means 52. *Id*. at 7:32–34. Transparent front plate 46 is fastened to the fastening collar of the edge parts by means of sealing elements 50 so that the edge parts of the front plate and the back wall form a closed display casing. *Id*. at 7:35–38. Display element 26 is inside the display casing. *Id*. at 8:4. Cooling elements 32 are in the backwall of the display casing, with first heat transfer part 60 extending

to the inside of the display casing, and second heat transfer part 62 extending to cooling space 20 outside the display casing. *Id*. at 8:13–16. The cooling elements transfer excess thermal energy from the display casing to the cooling space, from which space it is further conducted by air flow produced by cooling fans 36 out of the entire device. *Id.* at 8:19–22.

First cooling element 32 in the upper half of is in the form of cooling fins. Ex. 1006, 9:1–3. Second cooling element 32 in is in the form of a conduction element set against the surface of display element 26. *Id.* at 9:13–16. Karppanen teaches that conducting elements comprising cooling fins can be used. *Id.* at 9:17–19. Fans 64 on back wall 22 circulate air in the space between display element 26 and the walls of display casing 10. *Id.* at 9:3–5. Ducting 66 is arranged between display casing 10 and display element 26 so that air flow circulating the display element and equalizing the temperatures can be effected by fans 64, which force the air of the inner casing to flow past front plate 46 of the device. *Id.* at 9:5–8.

Karppanen describes that thermal energy is conducted, by air flow produced by the cooling fans, from cooling space 20 thermal energy out of the entire device. Ex. 1006, 9:19–22. In one embodiment, "there are ventilator slots or holes on the opposite sides of the cooling space for enabling air flow from the outside of the information board to the cooling space and from the cooling space back to the outside of the information board." *Id.* at 4:19–22.

*2. Analysis of Claim 12*

Petitioner contends that Karppanen teaches all of the elements of independent claim 12. Pet. 26–32. For example, Petitioner contends that Karppanen teaches "a housing" (weatherproof display and device casings 10

and 12), and "a liquid crystal display (LCD) positioned within the housing" (flat display element 26 can be a TFT LCD display and is positioned in the housing) "and having a backlight" (device casing 12 "contains 'electronic equipment needed in the control of the display element' including 'the power supplies of the background light of the display'" and "[a] POSITA would understand 'background light' to refer to a backlight in LCD display 26 because a plasma display does not require any 'background light.'"). *Id*. at 26–28 (citing Ex. 1006, code (57), 6:21–26, Fig. 2; Ex. 1002 ¶¶ 108, 112, 114).

Patent Owner responds that Karppanen does not teach or suggest "a closed loop of isolated gas" or "an open loop of ambient air that passes through the housing and along the backlight." PO Resp. 10–17. We address each argument in turn below.

*a) "a closed loop of isolated gas"*

Petitioner contends that Karppanen's electronic display is placed into a sealed casing, and "is encircled by a closed loop of isolated gas which circulates within the housing." Pet. 28 (citing Ex. 1006, 7:27–38, 9:3–8; Ex. 1002 ¶ 118). Petitioner provides an annotated version of Karppanen's Figure 2, reproduced below, to illustrate its contentions.

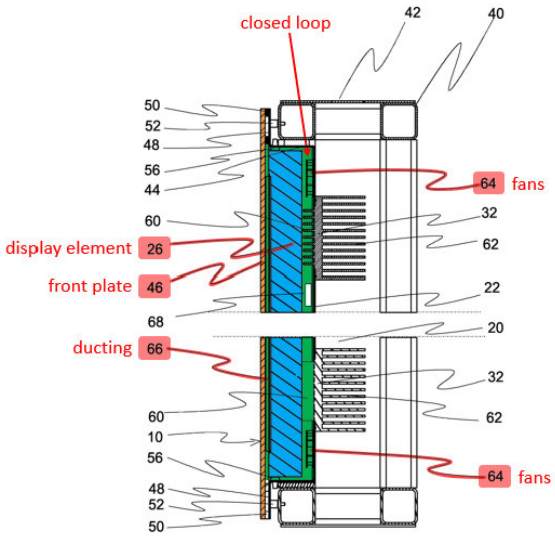


Pet. 29 (citing Ex. 1006, Fig. 2). Figure 2 is a cross-sectional view of an electronic information board described in Karppanen, with Petitioner's additions of orange shading to front plate 46, blue shading to display element 26, and green shading to the area surrounding display element 26 that includes fans 64 and includes the area between display element 26 and front plate 46 that Petitioner identifies as a "closed loop." *Id*. Petitioner contends that fans 64 circulate air in the space between display element 26 and the wall of the display casing, and ducting 66 directs the circulation of the air around display element 26. *Id*. at 28–29 (citing Ex. 1006, 4:32–36, 9:3–8, Fig. 2). Because "[t]his closed loop of air 'transfer[s] heat from the display casing to the outside of the display casing,'" Petitioner contends that Karppanen "teaches a closed loop that is capable of cooling the electronic display." *Id*. at 29 (citing Ex. 1006, 3:28–32).

Patent Owner responds that "[t]he '287 Patent defines 'isolated gas' as 'gas within the isolated gas cooling chamber 20 [that] is essentially isolated from external air in the housing of the display.'" PO Resp. 10 (citing Ex. 1001, 4:9–11). Patent Owner argues that "Karppanen is silent as to the

extent to which the display casing 1[0[3]]—which contains the display—must be sealed against particulates and water in order to reach the 'isolated gas' or 'closed loop' terms." *Id*. at 11 (citing Ex. 2024 ¶¶ 90–93); *see also* PO Surreply 2 ("Because Karppanen does not teach any particular level of isolation of air inside the display chamber, it does not teach the required closed loop *of isolated gas*."). Patent Owner also argues that "when Karppanen uses the term 'closed,' it refers to the position of the casing being shut, i.e., not open for maintenance." PO Resp. 12–13 (citing Ex. 1005, 7:7–11).

We disagree with Patent Owner. As set forth above, we construe "isolated gas" to mean gas that is essentially isolated from external air and substantially free of dust and contaminants. *See* Section II.B.1, *supra*. Karppanen teaches that display casing 10 includes back wall 22, transparent front plate 46, and edge parts 44 with flange-like fastening collars 48. Ex. 1006, 7:31–34. Karppanen explains that transparent front plate 46 is fastened to fastening collar 48 "by means of flexible, vibration attenuating sealing elements 50 so that the edge parts of the front plate and the back wall form a closed display casing." *Id*. at 7:35–38. Karppanen also teaches that fans 64 on back wall 22 circulate air in the space between display element 26 and the walls of display casing 10, where "[s]uitable ducting has been arranged . . . so that an air flow circulating the display element and equalizing the temperatures can be arranged by means of the fans." *Id*. at 9:3–7.

In addition, Mr. Smith-Gillespie testifies that "[t]he electronic display in Karppanen is placed into a sealed display casing," and "[t]he closed loop

[3] Patent Owner mistakenly refers to "display casing 12," but the context makes clear that Patent Owner intended to refer to "display casing 10."

of air flowing in the space between the display element and the walls of the display casing is essentially isolated from the external air in the housing of the display." Ex. 1002 ¶ 118 (citing Ex. 1006, 7:27–38, 9:3–8, 4:29–36). We credit Mr. Smith-Gillespie's testimony in this regard,[4] as it is supported by Karppanen's teachings, including that "the display casing and the device casing have been made weatherproof for enabling the performance of updating and maintenance measures outdoors" (Ex. 1006, 4:6–8), and that "sealing elements" form a "closed display casing" by attaching the front plate to the back wall (*id*. at 7:35–38). It is also consistent with the '287 patent's teaching that "the isolated gas cooling chamber need not necessarily be hermetically sealed from the external air" and that "[i]t is sufficient that the gas in the chamber is isolated to the extent that dust and contaminants may not substantially enter the first gas chamber." *Id*. at 4:19–23; *see also id*. at 7:16–22 (ventilator slots that enable air to move from outside of the device to the cooling space and from the cooling space to outside of the device "can be provided with filters in order to prevent the access of impurities to the ventilation space").

Based on the record before us, we find that Petitioner establishes that Karppanen teaches "a closed loop of isolated gas" as recited in claim 12.

[4] Dr. Pokharna's testimony that Karppanen does not disclose a "closed loop of isolated gas" is based on his opinion that a POSITA would look to the IP rating to quantify the degree of isolation. *See* Ex. 2024 ¶¶ 93–94. As set forth above, we do not agree with this argument, as there is no basis for it in the intrinsic record. *See* Section II.B.1, *supra*.

*b) "open loop of ambient air which pass through the housing and along the backlight"*

Petitioner contends that Karppanen "teaches an open loop of ambient air which passes through the housing and along the backlight." Pet. 29–32. Petitioner provides an annotated version of Karppanen's Figure 2, reproduced below, to illustrate its contentions. *Id.* at 30.

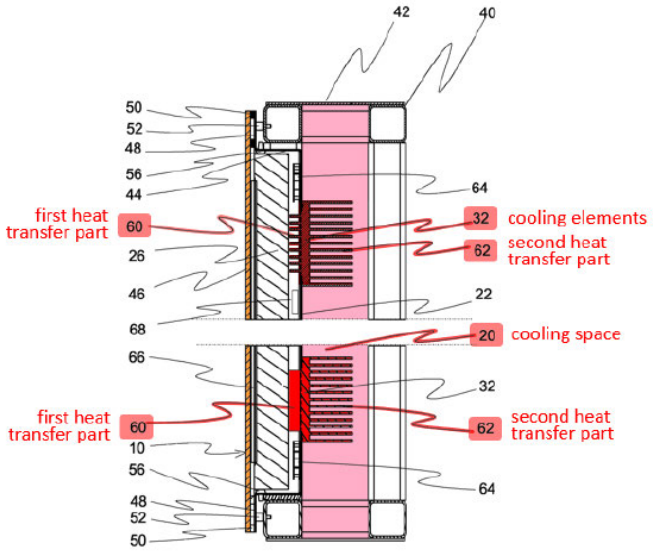


Figure 2 is a cross-sectional view of an electronic information board described in Karppanen, with Petitioner's additions of pink shading to cooling space 20, and red shading and identification labels to cooling elements 32, first heat transfer parts 60, and second heat transfer parts 62. *Id.* (citing Ex. 1006, Fig. 2). Petitioner asserts that "Karppanen discloses a 'cooling space 20' located behind the electronic display" that is "thermally connected" to Karppanen's closed loop "through 'cooling elements 32, which have a first heat transfer part 60 extending to the inside of the display casing and a second heat transfer part 62 extending to the cooling space 20 outside the display casing." *Id.* at 29–30 (citing Ex. 1006, 8:13–16, Fig. 2). Petitioner contends that "[h]eat is transferred from the display to the first

heat transfer part 60 (which touches the display inside the closed loop) and then to a second heat transfer part 62 which is in the open loop of ambient air." *Id*. (citing Ex. 1006, 8:13–22).

Petitioner contends that flow controllers fastened to the back wall of the display casing create horizontal flow ducts inside which second heat transfer parts 62 and cooling fans that are also fastened to the back wall are placed. Pet. 31. According to Petitioner:

> Because heat is transferred from the LCD to the first heat transfer part 60 which touches the rear surface of the LCD display, and then from the first heat transfer part 60 to the second heat transfer part 62, the electronic display is capable of being cooled by the open loop of ambient air which passes through the housing.

*Id*. at 32 (internal citations omitted) (citing Ex. 1006, 8:13–16, 8:29–36; Ex. 1002 ¶ 122). Petitioner also contends that, because "Karppanen discloses or at least suggests a backlight for the LCD display," "Karppanen teaches an open loop of ambient air which passes through the housing and along a backlight." *Id*. (citing *id*. at 27–28 (§ VIII.A.3); Ex. 1002 § 123).

Patent Owner responds that the "claim uses the positional term 'along' to claim the inventive cooling feature of directly cooling the backlight using ambient air passing next to the backlight to transfer heat out of the system." PO Resp. 13 (citing Ex. 2024 ¶ 98). Patent Owner asserts that "Karppanen discloses an ambient air cooling space 20 that passes through a channel defined by two walls—neither of those wall constitute the backlight of an LCD display if Karppanen were to include an LCD." *Id*. at 13–14. In particular, Patent Owner contends that cooling space 20 is formed between the wall separating the display casing from the cooling space and the wall of the device casing. *Id*. at 14 (citing Ex. 1006, 7:7–14). Because the LCD and

backlight in Karppanen are placed into a sealed casing that is encircled by a closed loop of isolated gas, Patent Owner argues that "the air within what Samsung maps to the 'closed loop' passes along the backlight; the ambient air instead passes through an entirely separate cooling space 20." *Id*. at 14–15.

As set forth above, we determine that "along the backlight" indicates the position of the airflow relative to the backlight, does not require contact with the backlight, and is not met merely by having thermal communication with the backlight. *See* Section II.B.2, *supra*. Patent Owner does not dispute Petitioner's showing (Pet. 27–28) that Karppanen teaches or suggests an LCD display having a backlight. *See* PO Resp. In light of this, Petitioner shows persuasively that Karppanen's cooling space 20 is located between the display casing (and backlight) and device casing such that it is coextensive with (i.e., along) the backlight. *See* Pet. 29–30 (citing Ex. 1002, 8:13–16, Fig. 2 (annotated)); Ex. 1002 ¶ 119 (citing Ex. 1002, 7:7–14, 8:13–16, Fig. 2 (annotated)).

Karppanen also teaches cooling elements 32 extending from inside the display casing into cooling space 20, which is located behind the electronic display (i.e., the LCD and backlight). Ex. 1006, 4:14–23, 8:12–15, Fig. 2. Karppanen teaches that the conduction element (i.e., cooling elements 32) is "placed so that it touches the heat source," and is preferably fastened to the heat source, "such as the surface of the display element." *Id*. at 8:29–36. Contrary to Patent Owner's argument (PO Resp. 15–17) about intervening structures between Karppanen's display and cooling space 20, we find that the disposition of cooling elements 32 as bridging the display and cooling space 20 evidences sufficient proximity to teach the "along the backlight"

limitation. Mr. Smith-Gillespie additionally testifies that "the horizontal flow of ambient air in the cooling space 20 is along the backlight and passes through the housing," and because cooling elements 32 (via first heat transfer parts 60) "are placed in direct contact with the backlight," the air is flowing "along the backlight." Ex. 1002 ¶ 123. We credit Mr. Smith-Gillespie's testimony in this regard, as it is consistent with and supported by the teachings in Karppanen.

For these reasons, and based on the record before us, we find that Petitioner establishes that Karppanen teaches "an open loop of ambient air which passes through the housing and along the backlight" as recited in claim 12.

*c) Conclusion: Claim 12*

Other than the arguments discussed above, Patent Owner does not dispute Petitioner's evidence that Karppanen teaches the limitations of claim 12. *See* PO Resp. We also reviewed Petitioner's explanations and supporting evidence as to how Karppanen teaches the other limitations of claim 12, and we agree with, and adopt as our own, Petitioner's analysis. Pet. 26–28; Ex. 1002 ¶¶ 103–115. Accordingly, we find that Karppanen teaches all of the limitations recited in claim 12. Pet. 26–32; Ex. 1002 ¶¶ 103–124.

*3. Analysis of Claims 13, 14, and 16*

Petitioner contends that claims 13, 14, and 16, which directly depend from claim 12, would have been obvious over Karppanen. Pet. 32–36; Ex. 1002 ¶¶ 125–134, 138–140. Patent Owner does not dispute that Karppanen teaches the additional limitations of these claims. *See* PO Resp. Having reviewed the parties' arguments and evidence, we are persuaded that

Petitioner's discussion of the particular structures in Karppanen, and the explanations in the Petition and the Smith-Gillespie Declaration, shows that Karppanen teaches all of the limitations of claims 13, 14, and 16. Pet. 32–36; Ex. 1002 ¶¶ 125–134, 138–140.

*4. Analysis of Claim 15*

Claim 15 depends from claim 12, and further requires "one or more electronic components for driving the LCD positioned within the rear cooling chamber." Ex. 1001, 7:22–25. Petitioner contends that "Karppanen teaches or suggests an LCD containing a backlight," and "[a] POSITA would understand that a driver or other electrical component like cabling for display element 26 is necessary and that the most obvious and conventional location to place such components" is on the rear surface of the display element 26. Pet. 35 (citing *id*. at 27–28 (§ VIII.A.3); Ex. 1002 ¶ 136). Petitioner contends that "there is minimal space in the ducting on the front and side surfaces of the display in which the driver or cabling can be placed," and "placing a backlight driver or cabling on the front surface would impede the ability to view the images being displayed." *Id*. (citing Ex. 1006, 2; Ex. 1002 ¶ 136). Petitioner asserts that "Karppanen discloses 'the device casing contains at least the control unit of the information board, the power supply of the control unit and the power supply of the background light display,'" and "[a] POSITA would understand this disclosure to imply that the driver for the backlight is located in the display casing." *Id*. (citing Ex. 1006, 3:32–34; Ex. 1002 ¶ 136).

Patent Owner responds that "Karppanen teaches separating the electronics for operating the display from the casing which cools the display itself," and, "if anything, Karppanen teaches away from including

electronics for controlling the display inside of ***the*** closed loop cooling chamber which also cools the display." PO Resp. 18 (citing Ex. 1006, 6:21–29); PO Sur-reply 7 (citing Ex. 1006, 7:22–29; Ex. 2024 ¶¶ 104–105). Patent Owner argues that Petitioner's conclusion "that the electronics for driving the display *must* be located within the display casing along the display" is "contrary to the explicit disclosure of Karppanen that the control units and power units for the display are in the ***device casing***." PO Resp. 18 (citing Ex. 1006, 6:19–26). Petitioner and Mr. Smith-Gillespie, however, persuasively explain why a POSITA would have understood Karppanen's teachings with respect to the placement of the control unit and power supply in the device casing as suggesting placement of the driver for the backlight in the display casing. *See* Pet. 35; Ex. 1002 ¶ 136. Mr. Smith-Gillespie's testimony that "a POSITA would understand that the most common placement of LCD drivers on an LCD module would be on the rear casing, as close to the LCD panel as practical to reduce electronic noise and signal degradation" further supports Petitioner's position. Ex. 1002 ¶ 136.

For these reasons, and based on the record before us, we find that Petitioner establishes that Karppanen teaches or suggests "one or more electronic components for driving the LCD positioned within the rear cooling chamber" as recited in claim 15.

*5. Analysis of Claim 17*

Claim 17 depends from claim 12 and further recites "the intended direction of the closed loop isolated gas flow is substantially perpendicular to the intended direction of open loop of ambient air flow." Ex. 1001, 7:31–34. Petitioner contends that "the closed loop of isolated gas flow in Karppanen flows predominantly in a vertical direction along the front and

back surfaces of display element 26," and "the open loop of ambient air flows in a horizontal direction along 'horizontal flow ducts 72' through ventilator holes 74 located on each side of the electronic information board. Pet. 37 (citing Ex. 1006, 4:19–22, 4:32–36, 11:1–4). Therefore, according to Petitioner, "[t]he intended direction of closed loop isolated gas flow is thus substantially perpendicular to the intended direction of open loop ambient air flow." *Id.* (citing Ex. 1002 ¶ 143).

Patent Owner responds that "Karppanen is silent as to the intended orientation of the air within the display casing and its relationship (if any) to the ambient air passing through the cooling space 20." PO Resp. 19 (citing Ex. 2024 ¶¶ 106–110). But Petitioner and Mr. Smith-Gillespie persuasively explain how a POSITA would have understood Karppanen's descriptions of the location and operation of horizontal flow ducts 72, in relation to the other components described in Karppanen, to teach that the air flow in the open loop is perpendicular to the direction of air flow in the closed loop. Pet. 37–39; Ex. 1002 ¶¶ 141–143; *see also* Section II.C.2.b, *supra* (analyzing Karppanen's teachings regarding the "open loop of ambient air which passes through the housing and along the backlight" limitation of claim 12); Ex. 1043, 28:23–29:2 (Dr. Pokharna answering "Yes" to the question "[t]he intended direction of the ambient airflow is the horizontal direction across the cooling space located behind the display, correct?").

Based on our review of the complete trial record, we find that Karppanen teaches or suggests "the intended direction of the closed loop isolated gas flow is substantially perpendicular to the intended direction of open loop of ambient air flow" limitation of claim 17. Pet. 37–39; Ex. 1002 ¶¶ 141–143.

*6. Analysis of Claims 18–20*

Petitioner contends that Karppanen teaches or suggests all of the limitations of independent claim 18, and claims 19 and 20 that directly depend therefrom. Pet. 39–42; Ex. 1002 ¶¶ 144–168.

For example, Petitioner contends that Karppanen teaches "a closed loop of isolated gas" as recited in claim 18 for the same reasons discussed above with respect to the similar limitation in claim 12. Pet. 42 (citing *id.* at 28–32 (§ VIII.A.4)). Patent Owner responds that Karppanen does not teach "a closed loop of isolated gas" as recited in claim 18. PO Resp. 10–13. For the reasons discussed above with respect to the "closed loop of isolated gas" limitation of claim 12, we disagree with Patent Owner's arguments, and find that Karppanen teaches "a closed loop of isolated gas" limitation of claim 18. Section II.C.2.a, *supra*.

Patent Owner does not dispute that Karppanen teaches the other limitations of claims 18–20. *See* PO Resp. Having reviewed the parties' arguments and evidence, we are persuaded that Petitioner's discussion of the particular structures in Karppanen, and the explanations in the Petition and the Smith-Gillespie Declaration, shows that Karppanen teaches all of the limitations of claim 18, and claims 19 and 20 that depend therefrom. Pet. 39–42; Ex. 1002 ¶¶ 144–168.

*7. Analysis of Claim 21*

Petitioner contends that Karppanen teaches all of the elements of independent claim 21. Pet. 42–45. For example, Petitioner contends that Karppanen teaches "a closed loop of cooling gas adapted for circulation within the electronic housing" limitation of claim 21 because, "[i]n addition to the closed loop that surrounds the electronic display discussed above

[with respect to claim 12], Karppanen also teaches that a closed loop of air can be used to surround the electrical components located in the device casing." *Id*. at 43 (citing Ex. 1006, 10:20–22). Petitioner contends that "[l]ike the display casing, the device casing is also 'closed.'" *Id*. (citing Ex. 1006, 6:20–21). According to Petitioner, "[b]y using the same cooling systems in both the display casing 10 and device casing 12, the cooling 'air flow circulates as forced past all the components becoming warmed.'" *Id*. (citing Ex. 1006, 10:22–23).

Patent Owner does not dispute that Karppanen teaches the limitations of claim 21. *See* PO Resp. Having reviewed the parties' arguments and evidence, we are persuaded that Petitioner's discussion of the particular structures in Karppanen, and the explanations in the Petition and the Smith-Gillespie Declaration, shows that Karppanen teaches all of the limitations of claim 21. Pet. 42–45; Ex. 1002 ¶¶ 169–189.

*8. Analysis of Claims 22 and 23*

Claim 22 depends from claim 21 and further recites "the closed loop of cooling gas is isolated within a continuous loop gas cooling chamber, and the open loop of ambient pathway is configured to direct the ambient air over an exterior surface of the gas cooling chamber when it flows through the electronic display housing." Ex. 1001, 8:30–35. Petitioner contends that Karppanen teaches this limitation. Pet. 45 (citing Ex. 1002 ¶¶ 191–196). Patent Owner responds that claim 22 does not teach that the gas within the closed loop is isolated. PO Resp. 10–13.

For the reasons discussed above with respect to the "closed loop of isolated gas" limitation of claim 12, we disagree with Patent Owner's arguments, and find that Karppanen teaches "the closed loop of gas is

isolated within a continuous loop gas cooling chamber" limitation of claim 18. Section II.C.2.a, *supra*. Patent Owner does not dispute that Karppanen teaches the additional limitations of claim 22. *See* PO Resp. Having reviewed the parties' arguments and evidence, we are persuaded that Petitioner's discussion of the particular structures in Karppanen, and the explanations in the Petition and the Smith-Gillespie Declaration, shows that Karppanen teaches all of the limitations of claim 22. Pet. 45; Ex. 1002 ¶¶ 190–196.

Claim 23 depends from claim 22, and further recites "a fan located within the electronic display housing, the fan configured and oriented to move air located within the housing between a surface of the continuous loop gas cooling chamber and a rear surface of the electronic display." Ex. 1001, 8:36–42. Petitioner contends that Karppanen teaches these limitations. Pet. 45–46 (citing Ex. 1002 ¶¶ 198–203). Patent Owner does not dispute that Karppanen teaches the additional limitations of claim 23. *See* PO Resp. Having reviewed the parties' arguments and evidence, we are persuaded that Petitioner's discussion of the particular structures in Karppanen, and the explanations in the Petition and the Smith-Gillespie Declaration, shows that Karppanen teaches all of the limitations of claim 23. Pet. 45–46; Ex. 1002 ¶¶ 198–203.

*D. Asserted Obviousness over Nagashima and Karppanen*

Petitioner contends that claims 1, 4, 5, 8–12, 14–17, and 21–23 would have been obvious over the combined teachings of Nagashima and Karppanen. Pet. 46–64.

*1. Overview of Nagashima*

Nagashima is directed to liquid cooling technology for heat generating elements in "a desk-top type computer integrated or combined with a liquid crystal display (LCD)." Ex. 1007, 1:8–12. In particular, Nagashima teaches fixing a heat receiving head connected to a tube filled with a cooling medium liquid to at least one heat generating portion of the computer. *Id*. at 2:28–33. Nagashima teaches that "[t]he cooling medium liquid circulating through the tube serves as a heat transferring medium to radiate the heat generated at the heat generating portion through the tube on the chassis surface and the chassis itself." *Id*. at 2:33–37.

Figure 1 is reproduced below.

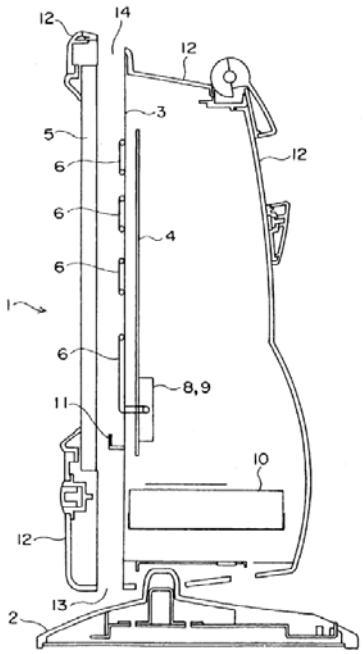


Figure 1 is a section view of an overall configuration for liquid cooling of desk-top type computer described by Nagashima. Ex. 1007, 2:59–61. The desk-top type computer comprises computer body 1 and stand 2. *Id*. at 3:53–55. Within computer body 1, LCD panel 5 is mounted on the front

side of main chassis 3, with motherboard 4 disposed on the backside thereof. *Id*. at 3:55–58. CPU 9 and hard disk drive 10 are arranged on the backside of motherboard 4, and heat receiving head 8 is in contact with the heat generating elements. *Id*. at 4:4–10. Tube 6 is secured on the front side of main chassis 3, and circulates the cooling liquid medium to collect heat from heat receiving head 8. *Id*. at 4:20–22, 4:51–53. Liquid collector 11 is provided to collect any cooling medium liquid that leaks from tube 6. *Id*. at 4:63–5:4. Cover 12 includes air inlet 13 for air-cooling the heat radiating portion of tube 6 and main chassis 3, and air outlet 14 for exhausting the air. *Id*. at 5:13–20.

Figures 6A and 6B are reproduced below.

FIG. 6A

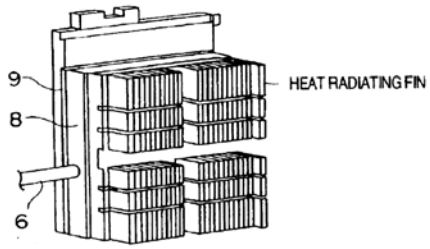


FIG. 6B

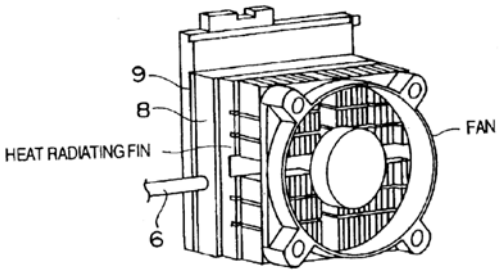


Figures 6A on the left and 6B on the right "are views illustrating configuration examples for liquid cooling and air cooling of a CPU" described in Nagashima. Ex. 1007, 3:8–10. Heat receiving head 8 is fixed to CPU 9 to receive the heat generated by CPU 9 and transfer the heat via the liquid cooling medium in tube 6 "to a heat radiating portion on the front side of a main chassis or the back side of an LCD panel" as in Figure 1. *Id*. at 6:64–7:7. A heat radiating fin is provided on heat receiving head 8. *Id*. at 7:7–8.

Nagashima explains that the configurations shown in Figures 6A and 6B are "aim[ed] at radiating by liquid cooling an extra heat that cannot be radiating from the heat radiating fin provided on the heat receiving head." Ex. 1007, 7:9–12. Nagashima further explains that the fan provided on the radiating fin shown in Figure 6B "realizes the effective and rapid radiation of heat from the heat radiating fin." *Id*. at 7:16–19. According to Nagashima, "the embodiment shown in FIG. 6 applies liquid cooling and air cooling in combination to the heat generating source such as the CPU, and it is possible to increase the maximum capacity of heat radiation and improve the heat radiation efficiency." *Id*. at 7:20–24.

*2. Analysis of Claim 1*

Petitioner contends that the combination of Nagashima and Karppanen teaches all of the limitations of claim 1. Pet. 46–55; Ex. 1002 ¶¶ 204–229. We focus our analysis on the "the electronic display is coolable by a combination of gas circulation within the closed loop cooling chamber and ambient air flow through the open loop ambient air pathway in the electronic display housing" limitation of claim 1, as it is dispositive of the controversy between the parties.

Petitioner contends that Nagashima teaches that the electronic display is coolable by an open loop ambient air pathway because ambient air flowing "through the 'chimney' between the LCD panel 5 and main chassis 3 air-cools the display in part because 'the back side of the LCD panel has a large area of the metal surface, and heat dissipation can be carried out at high efficiency while utilizing this large area." Pet. 53–54 (citing Ex. 1007, 5:13–22, 5:61–63). Petitioner contends that fans inside the

chimney enable the transport of a large volume of cooling air into the chimney. *Id*. at 54 (citing Ex. 1007, 6:11–13).

Petitioner further contends that Nagashima's "tube 6 is in conductive thermal communication with the rear cooling chamber formed by main chassis 3 and rear cover 12." Pet. 54 (citing Ex. 1002 ¶ 226). Petitioner contends that tube 6 "is attached to the display, thereby transferring heat from the display to the rear cooling chamber containing a closed loop generated by the heat receiving head and fin" and "[t]he closed loop thus cools the display in this embodiment." *Id*. at 54–55 (citing Ex. 1002 ¶ 226). In the Reply, Petitioner cites Dr. Pokharna's cross-examination testimony that "ambient air is . . . flowing over the tube that's connected between the LCD and the main chassis" via the open loop fan in the "chimney." Pet. Reply 9 (quoting Ex. 1043, 38:18–39:12). As such, Petitioner contends that "by circulating air and cooling the liquid in the tubes, Nagashima's closed loop cools the display." *Id.* at 9–10 (citing Pet. 54–55).

Patent Owner responds that Nagashima "teaches the deliberate heating of the display rear surface in order to transfer heat ***to the display*** from the electronics inside of the cover 12." PO Resp. 25 (citing Ex. 1007, 5:38–49). Patent Owner argues that Petitioner does not provide any "evidence within Nagashima to support" the conclusion that "the tubes carrying heat from the electronic components inside the cover *cool* the rear surface of the display." *Id*. Instead, Patent Owner argues, "Nagashima consistently describes the hotter liquid in the tubes as transferring heat ***to*** the display—meaning the liquid is hotter than the display it transfers heat to." PO Sur-reply 11 (citing Ex. 1007, 2:41–46, 5:45–59). Therefore, according to Patent Owner, "[b]ecause heat is being transferred ***onto*** the back surface of the LCD ***from***

the liquid tubes, the LCD is being heated by thermal energy from inside of cover 12, not ***cooled*** by it." *Id*.

Based on our review of the record, we determine that Petitioner has not shown that the combination of Nagashima and Karppanen teaches the "the electronic display is coolable by a combination of gas circulation within the closed loop gas cooling chamber and ambient air flow through the open loop ambient air pathway in the electronic display housing" limitation of claim 1. In particular, we are not persuaded that Nagashima teaches that "gas circulation within the closed loop gas cooling chamber" cools the electronic display.

Nagashima teaches that "[a] heat receiving head is fixed to at least one heat generating portion including the CPU," and "[a] tube filled with a cooling medium liquid is connected to the heat receiving head" and "secured onto the surface of the chassis, which is disposed opposite to the plane-shaped display with a clearance therefrom." Ex. 1007, 2:28–33. Nagashima teaches that "[t]he cooling medium liquid circulating through the tube serves as a heat transferring medium to radiate the heat generated at the heat generating portion through the tube on the chassis surface and the chassis itself." *Id*. at 2:33–37; *see also id*. at 2:38–55 (describing that, alternatively, the cooling medium liquid in the tube secured on the back surface of the plane-shaped display radiates the generated heat through the tube and the plane-shaped display, the chassis surface, and the chassis). Nagashima further explains that "the heat generating sources in the desk-top type computer include, besides the CPU, a chip set, a display controller, a power source portion, an HDD, and FDD, a CD-ROM portion, a CDR-R/W portion, and a DVD-ROM portion." *Id*. at 4:10–14.

Nagashima teaches an embodiment where the tube "goes through a pump, a heat receiving head, and an opening in a main chassis and is fixed on the back surface of an LCD panel to form a heat radiating portion." Ex. 1007, 5:41–45. In this embodiment, "the back surface of the LCD panel is made of a metal material, and the heat of a cooling medium liquid from the tube . . . can be transferred effectively onto the back surface of the LCD panel and radiated." *Id*. at 5:45–49. Nagashima describes another embodiment wherein a heat receiving head "receive[s] the heat generated by the CPU in order to transfer the generated heat via a cooling medium . . . in a tube to a heat radiating portion on the front side of a main chassis or the back side of an LCD panel." *Id*. at 6:66–7:8; *see also id*. at 7:30–52 (describing a tube configuration where both the LCD panel and the chassis can serve as heat radiating surfaces). Thus, Nagashima teaches that the heat generated by the heat-generating sources (such as the CPU) is transferred first to the cooling medium liquid in the tube and then to the chassis and/or the back surface of the LCD, and is radiated from the main chassis and/or the back surface of the LCD display.

Petitioner identifies Nagashima's LCD panel as the "electronic display" recited in claim 1. Pet. 51 (citing Ex. 1007, Fig. 1; Ex. 1002 ¶¶ 220–221). Petitioner contends that Nagashima's "[m]ain chassis 3 and cover 12 create a closed loop gas cooling chamber within the housing." Pet. 48 (citing Ex. 1007, Fig. 2). Nagashima teaches that the heat-generating sources (such as the CPU) are arranged within this rear cooling chamber. *See* Ex. 1007, 3:59– 4:14. Instead of teaching that the cooling medium in the tube transfers heat from the display to the rear cooling chamber as

Petitioner contends (Pet. 54–55), Nagashima teaches the opposite: transferring heat *from* the rear cooling chamber *to* the electronic display.

We recognize that Petitioner and Mr. Smith-Gillespie argue that Nagashima's tube 6 is attached to the display and therefore it "is in conductive thermal communication with the rear cooling chamber," "thereby transferring heat from the display to the rear cooling chamber" and "the closed loop thus cools the display." Pet. 54–55 (citing Ex. 1007, Fig. 4; Ex. 1002 ¶ 226). In light of Nagashima's teaching that the heat is transferred *from* the rear cooling chamber *to* the electronic display, neither Petitioner nor Mr. Smith-Gillespie adequately explains why or how heat is transferred back from the display to the rear cooling chamber. Nagashima teaches that "the heat of a cooling medium liquid from the tube, which is arranged spirally or in a zig-zag or serpentine manner" on the back surface of the LCD "can be transferred effectively onto the back surface of the LCD and radiated." Ex. 1007, 5:40–48. As Petitioner notes, Nagashima teaches that ambient air that flows through an open loop created between LCD 5 and main chassis 3 air-cools the back surface of the LCD, which allows heat dissipation from the back surface of the LCD to be "carried out at a high efficiency." Pet. 53–55 (citing Ex. 1007, 5:13–22, 5:61–63). This undermines Petitioner's conclusory assertion that heat is transferred from the tubes to the rear cooling chamber. Furthermore, even if we were to assume that air blowing over tube 6 in the "chimney" removes some heat from tube 6 as asserted by Petitioner (*see* Pet. Reply 9–10), Petitioner and Mr. Smith-Gillespie do not explain how the alleged closed loop would simultaneously remove heat from the rear cooling chamber (i.e., in one direction) and from the display (i.e., in the opposite direction). As stated

above, this does not square with Nagashima's disclosure about the operation of tube 6.

It is Petitioner's burden to establish facts supporting its challenge that claim 1 would have been obvious over the combination of Nagashima and Karppanen by a preponderance of the evidence. 35 U.S.C. § 316(e) (2018); *see also Harmonic Inc. v. Avid Tech., Inc.*, 815 F.3d 1356, 1363 (Fed. Cir. 2016) (citing 35 U.S.C. § 312(a)(3) (requiring inter partes review petitions to identify "with particularity . . . the evidence that supports the grounds for the challenge to each claim")). After considering Petitioner's and Patent Owner's positions, as well as their supporting evidence, we are not persuaded that Petitioner demonstrates that the combination of Nagashima and Karppanen teaches or suggests "the electronic display is coolable by . . . gas circulation within the closed loop gas cooling chamber" as recited in claim 1. Accordingly, we determine that Petitioner does not demonstrate by a preponderance of the evidence that claim 1 would have been obvious over the combination of Nagashima and Karppanen.

*3. Analysis of Claims 4, 5, and 8–11*

Petitioner contends that claims 4, 5, and 8–11 would have been obvious over the combination of Nagashima and Karppanen. Pet. 55–58. Claims 4, 5, and 8–11 depend, directly or indirectly, from claim 1, and therefore include the "the electronic display is coolable by . . . gas circulation within the closed loop gas cooling chamber" limitation of claim 1. Ex. 1001, 6:32–40, 6:52–7:5. Thus, for the same reasons given above with respect to Petitioner's challenge of claim 1, we also conclude that Petitioner does not demonstrate by a preponderance of the evidence that

claims 4, 5, and 8–11 would have been obvious over the combination of Nagashima and Karppanen.

*4. Analysis of Claims 12 and 21*

Petitioner contends that the combination of Nagashima and Karppanen teaches all of the limitations of independent claims 12 and 21. Pet. 58–60, 62–63.

Claim 12 requires that "the electronic display is coolable by . . . a closed loop of isolated gas which circulates within the housing." Ex. 1001, 7:9–11. Claim 21 recites that "the electronic display is coolable by . . . closed loop cooling gas circulation within the electronic display housing." *Id*. at 8:25–27. Petitioner relies on the arguments it made with respect to the "the electronic display is coolable by . . . gas circulation within the closed loop gas cooling chamber" limitation of claim 1 to support its contentions with respect to these similar limitations in claims 12 and 21. Pet. 60 (citing *id*. at 53–54 (§ IX.A.6)), 63 (same). Therefore, for the same reasons given above with respect to Petitioner's challenge of claim 1, we also conclude that Petitioner does not demonstrate by a preponderance of the evidence that independent claims 12 and 21 would have been obvious over the combination of Nagashima and Karppanen.

*5. Analysis of Claims 14–17, 22, and 23*

Petitioner contends that claims 14–17, 22, and 23 would have been obvious over the combination of Nagashima and Karppanen. Pet. 61–63. Claims 14–17 depend from claim 12, and therefore include the "the electronic display is coolable by . . . a closed loop of isolated gas which circulates within the housing" limitation of claim 12. Ex. 1001, 7:15–34. Claims 22 and 23 depend, directly or indirectly, from claim 21, and therefore

include the "the electronic display is coolable by . . . closed loop cooling gas circulation within the display housing" limitation of claim 21. *Id.* at 8:30–42. Thus, for the same reasons given above with respect to Petitioner's challenge of claims 12 and 21, we also conclude that Petitioner does not demonstrate by a preponderance of the evidence that claims 14–17, 22, and 23 would have been obvious over the combination of Nagashima and Karppanen.

*E. Asserted Obviousness over Ohta and Marumoto*

Petitioner contends that claims 1, 4, 5, and 8–23 would have been obvious over the combined teachings of Ohta and Marumoto. Pet. 48–50.

*1. Overview of Ohta*

Ohta relates to a cooling device for a plasma display panel that is integrally formed with, and able to improve the contrast of, the plasma display panel. Ex. 1004 ¶ 1. In particular, Ohta teaches that the cooling device "has a container that is directly mounted at an appropriate space from the plasma display panel so as to form an airtight container between itself and the plasma display panel, and coolant that either flows in/out of this airtight container or is sealed within the same." *Id.* ¶ 6.

Figure 3 is reproduced below.

(FIG. 3)

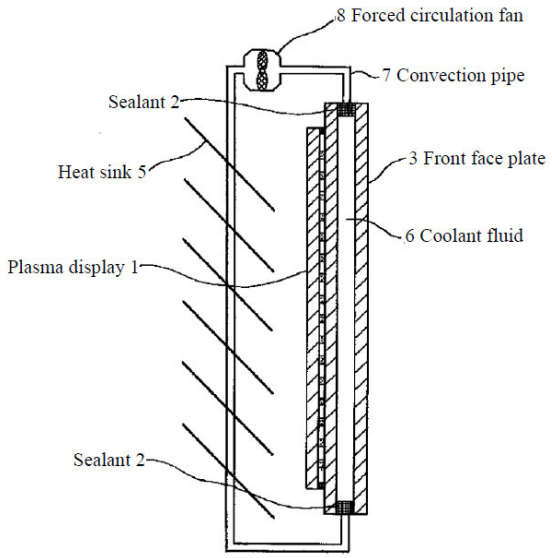


Figure 3 is a lateral cross-section of one embodiment ("embodiment example 3") of the cooling system described in Ohta. Ex. 1004 ¶ 18. Front face plate 3 (having sufficient permeability to light) is integrated with a plasma display panel 1 using sealant 2, which also serves as a spacer therebetween the edges, to form an airtight container between front face plate 3 and plasma display panel 1. *Id.* ¶ 19. "The top and bottom ends of the interior of the airtight container formed between first face plate 3 and the display face of the plasma display panel 1 are connected by means of a convection tube 7." *Id.* Heat sinks 5 and forced circulation fan 8 are formed along the length of convection tube 7. *Id.* The interior of the airtight container formed between front face plate 3 and display panel 1, and convection tube 7, is filled with coolant fluid 6. *Id.* Ohta explains that the activation of forced circulation fan 8 causes cooling fluid 6 to circulate through convection tube 7 and within the interior of the airtight container formed between front face plate 3 and plasma panel 1. *Id.* ¶ 21. In this way,

Ohta teaches, the heat from plasma display panel 1 is expelled to the exterior from heat sink 5, thus cooling plasma display panel 1. *Id.*

Figure 5 is reproduced below.

(FIG. 5)

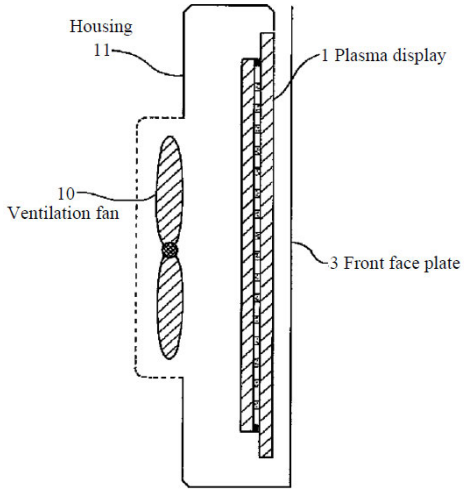


Figure 5 is a lateral cross-section of another embodiment ("embodiment example 5") of the cooling device described in Ohta. Ex. 1004 ¶ 30. In embodiment example 5, "plasma display panel 1 is incorporated with a housing 11 having an integrally formed front face plate 3 that maintains an appropriate distance between itself and the display face of the plasma display panel 1. *Id.* ¶ 31. A gap is provided at the bottom end of plasma display panel 1 and housing 11, so that outside air can be blown into the space between plasma display panel 1 and front face plate 3 in housing 11. *Id.* Slits are provided behind ventilation fan 10 for the intake of air. *Id.* Ohta explains that when ventilation fan 10 activates, it sends outside air through housing 11 into the space between front face plate 3 and plasma display panel 1, thus cooling panel display 1 when plasma display panel 1's heat is discharged to the exterior. *Id.* ¶ 33.

*2. Overview of Marumoto*

Marumoto "relates to a heating/cooling system for liquid crystal display panel that makes it possible to use a liquid crystal display panel beyond its operating temperature range." Ex. 1005 ¶ 1. Marumoto's system includes

> a panel heating/cooling plate, which comprises a high heat conductive plate positioned adjacently to the back face of a liquid crystal panel, in the interior of which a channel for heating/cooling material is formed; a temperature sensor that measures the temperature of the liquid crystal panel; and a temperature control component that adjusts the temperature of the heating/cooling material that is passed through the channel in the panel heating/cooling plate in accordance with the detection signal of a temperature sensor.

*Id.* ¶ 6.

Figure 1 is reproduced below.

(FIG. 1)

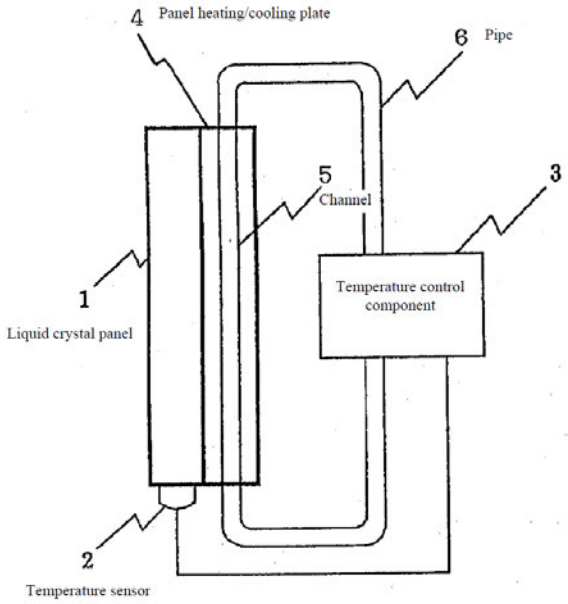


Figure 1 is a schematic drawing of one embodiment of Marumoto's heating/cooling system. Ex. 1005 ¶ 10. Temperature sensor 2 is attached to

liquid crystal panel 1 to measure the temperature of the environment in which liquid crystal panel 1 is installed, and supplies that temperature to temperature control component 3. *Id.* Panel heating/cooling plate 4 is bonded to the back face of liquid crystal panel 1. *Id.* ¶ 11. Panel heating/cooling plate 4 comprises a high heat transmission plate, in the interior of which is channel 5. *Id.* The entry of channel 5 is connected to pipe 6, and the exit of channel 5 is connected to temperature control component 3 so that "the heating/cooling material circulates between the panel heating/cooling plate 4 and the temperature control component 3." *Id.*

In operation, temperature control component 3 responds to the temperature reported by temperature sensor 2, and either raises or lowers the temperature of the heating/cooling material to heat or cool panel heating/cooling plate 4 as required. *Id.* ¶ 13. Marumoto teaches that "this is achieved by increasing or reducing the gas pressure if the heating/cooling material is a gas," or by increasing or reducing the fluid temperature if the heating/cooling material is a liquid (such as water). *Id.*

*3. Analysis of Claim 1*

Petitioner contends that the combination of Ohta and Marumoto teaches all of the limitations of claim 1. Pet. 65–70. Patent Owner responds that the proposed combination does not disclose "an electronic display housing," "a gas-containing closed loop gas cooling chamber located within the electronic display housing," or "the electronic display is coolable by a combination of gas circulation within the closed loop and ambient air flow through the open loop ambient air pathway in the electronic display housing" as recited in claim 1. PO Resp. 28–29, 32–33, 36. Patent Owner also argues that Petitioner does not establish a motivation to combine Ohta

with Marumoto as proposed. *Id*. at 38–40. We address each argument in turn.

*a) "an electronic display housing"*

Petitioner contends that Ohta teaches "an electronic display housing." Pet. 65; Ex. 1002 ¶¶ 298–301. In particular, Petitioner contends that Ohta's embodiment example 3 discloses nearly all the limitations in claim 1, but does not expressly disclose a housing. Pet. 65. Petitioner then contends that "Ohta explains that, in 'embodiment example 5' of the 'present invention,' the '[plasma] display panel 1 is incorporated with a housing 11.'" *Id*. (citing Ex. 1004 ¶¶ 30–31). Petitioner further contends that "a POSITA would understand that, based on the teaching in 'embodiment example 5,' the electronic display and cooling systems taught in Ohta could be included in the same housing." *Id*. (citing Ex. 1002 ¶ 300).

Patent Owner responds that "Example 5's housing would not function as needed in Example 3 because the housing in Example 5 is specifically designed to provide an opened space between the LCD front surface and the front glass plate for ambient air to pass over the ***front*** surface of the LCD." PO Resp. 29 (citing Ex. 2024 ¶ 140; Ex. 1004 ¶ 31). Patent Owner argues that "Example 3, by contrast, requires that area to be sealed so that the liquid ethylene glycol may flow through the channel between the LCD front surface and front glass plate." *Id*. (citing Ex. 2024 ¶ 140; Ex. 1004 ¶ 26).

We disagree with Patent Owner. As we understand it, Petitioner does not propose physically combining the cooling system described in Ohta's embodiment examples 3 with the housing described in embodiment example 5; instead, Petitioner proposes containing the system described in embodiment example 3 in a housing, as taught by embodiment example 5.

*See, e.g.*, Pet. 65 ("a POSITA would understand that, based on the teaching in 'embodiment example 5,' the electronic display and cooling systems taught in Ohta could be included in the same housing"). This understanding is supported by Petitioner's reliance on forcibly cooled heat sinks 5 in embodiment example 3 to meet the "an open loop ambient air pathway through the electronic display housing" limitation of claim 1. *Id*. at 68–69. Furthermore, we understand Petitioner to be arguing that, based on embodiment example 5, a POSITA would have known to include the display and cooling system of embodiment example 3 in a housing generally, not in the particular housing 11 as configured in embodiment example 5. *Id*. at 65.

Based on the record before us, we find that Petitioner establishes that the combination of Ohta and Marumoto teaches "an electronic display housing" as recited in claim 1.

*b) "a gas-containing closed loop gas cooling chamber located within the electronic display housing"*

Petitioner contends that the combination of Ohta and Marumoto teaches "a gas-containing closed loop gas cooling chamber located within the electronic housing." Pet. 66–67; Ex. 1002 ¶¶ 302–307. Petitioner provides an annotated version of Ohta's Figure 3, reproduced below, to illustrate its contentions.

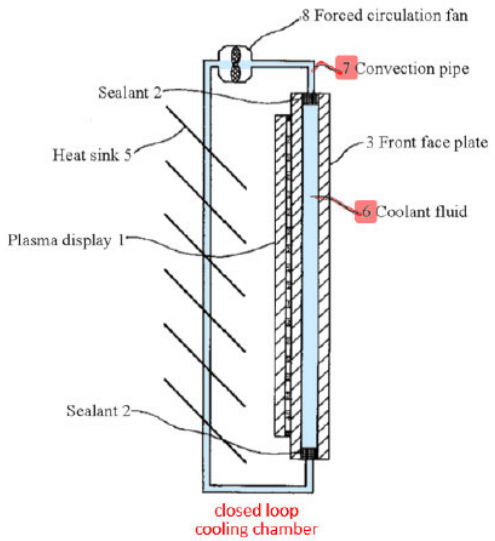


Pet. 66; Ex. 1004, Fig. 3. Annotated Figure 3 is a lateral cross-section of the cooling device described in Ohta's embodiment example 3, with Petitioner's addition of red highlighting to "7 Convection Pipe" and "6 Coolant fluid," and Petitioner's identification of the figure as "closed loop cooling chamber." Ex. 1004 ¶ 37, Fig. 3. Petitioner contends that "[t]he closed loop contains a coolant fluid 6 and 'forced circulation fan 8' which 'caus[es] the cooling fluid 6 to circulate within the interior of the' closed loop." Pet. 66 (citing Ex. 1004 ¶ 21) (alterations in original). Petitioner contends that "[t]he container having the closed loop is 'sealed' and 'airtight.'" *Id.* (citing Ex. 1004 ¶ 6). Petitioner also contends that "Marumoto further teaches that the 'heating/cooling material may be a gas or a fluid,'" and "a POSITA would have been motivated to modify" Ohta's closed loop "by replacing the cooling fluid with gas." *Id.* at 67.

Patent Owner responds that Ohta describes a closed tube of liquid or open pathways for air to pass over the front surface of the plasma display, and, therefore, "there is no 'closed loop' of 'isolated gas' as required by these claims." PO Resp. 32 (citing Ex. 1004 ¶¶ 18–24, 30–35, Figs. 3, 5).

Patent Owner argues that "Marumoto does not cure this deficiency," because "the closed tube of gas in Marumoto passes along the ***rear surface*** of the display, not the ***front surface*** as described in Ohta." *Id.* (citing Ex. 1055, Fig. 1). Petitioner, however, proposes modifying Ohta's closed loop by replacing the cooling fluid within the closed loop with gas, as taught by Marumoto. Pet. 67. Such a modification does not include any structural changes to Ohta's closed loop, or any modification of Marumoto itself.

Based on the record before us, we find that Petitioner establishes that the combination of Ohta and Marumoto teaches "a gas-containing closed loop gas cooling chamber located within the electronic display housing" as recited in claim 1.

*c) "the electronic display is coolable by a combination of gas circulation within the closed loop and ambient air flow through the open loop ambient air pathway in the electronic display housing"*

Petitioner contends that the combination of Ohta and Marumoto teaches the "the electronic display is coolable by a combination of gas circulation within the closed loop gas cooling chamber and ambient air flow through the open loop ambient air pathway in the electronic display housing" limitation of claim 1. Pet. 69–70; Ex. 1002 ¶¶ 315–318. Petitioner contends:

> Ohta discloses with reference to "embodiment example 3" that when a specified temperature is exceeded, "the forced circulation fan 8 activates, causing the cooling fluid 6 to circulate within" the closed loop "such that the heat from the plasma display panel 1 is expelled to the exterior from the heat sink 5, thereby cooling the panel."

Pet. 69–70 (citing Ex. 1004 ¶ 21). Petitioner also contends that Ohta's "'embodiment example 3' includes 'heat sinks 5' which can be 'forcibly air

cooled'" and "[a] POSITA would understand this disclosure to require cooling of the heat sinks using open loop ambient air provided by a fan." Pet. 68 (citing Ex. 1004 ¶¶ 19, 24; Ex. 1002 ¶ 313). Petitioner contends that "the heat sink 5 is cooled using an open loop ambient air pathway." *Id.* at 70. Petitioner further contends that "[i]t would have been obvious to position an open loop fan in a direction that cools both the heat sink and the rear surface of the LCD display containing a backlight in Ohta as modified by Marumoto." *Id.* (citing Ex. 1002 ¶ 317).

Patent Owner responds that "[b]oth Marumoto and Ohta describe ***only*** the use of either a sealed loop of fluid or gas ***or*** an ambient air pathway." PO Resp. 36 (citing Ex. 2024 ¶ 157). Patent Owner argues that Petitioner does not establish how the proposed "modifications to Ohta and Marumoto would create a closed loop and an open loop of air that ***both*** cool the display." *Id.* We disagree. As described above, Petitioner persuasively shows how exchanging the cooling fluid in Ohta's closed loop with cooling gas as taught by Marumoto cools the display, and how adding a fan will forcibly cool the heat sink as well the display. Pet. 69–70; *see also* Ex. 1004 ¶ 24 ("Note that although in the above described embodiment examples the heat sink was naturally air-cooled, it goes without saying that it is also acceptable for the heat sink to be forcibly air-cooled or cooled by a method such as fluid cooling or the like.").

Based on the record before us, we find that Petitioner establishes that the combination of Ohta and Marumoto teaches "the electronic display is coolable by a combination of gas circulation within the closed loop gas cooling chamber and ambient air flow through the open loop ambient air pathway in the electronic display housing" limitation of claim 1.

*d) Motivation to Combine*

Petitioner contends:

> A POSITA would be motivated to modify the teachings from Ohta's closed loop cooling system for a plasma display (*see* Ex. 1004, ¶¶[0006], [0023]), with the teachings from Marumoto's closed loop cooling system for a LCD panel in two ways: (i) to replace the liquid cooling medium in Ohta with gas and (ii) to replace the plasma display in Ohta with an LCD as in Marumoto.

Pet. 83.

In particular, Petitioner contends that "a POSITA would have been motivated to replace the liquid closed loop cooling system in Ohta with a gas-based cooling system" such as the one described in Marumoto "in order to reduce maintenance costs, prevent leakage of the liquid cooling fluid and reduce energy costs." *Id.* (citing Ex. 1002 ¶ 406). Petitioner contends that the power systems in Ohta and Marumoto are compatible, and in both Ohta Marumoto, "the electronic display is located outside the closed loop cooling chamber, reflecting that the substitution of gas/air for a transparent cooling liquid will work in either cooling system." *Id.* at 84 (citing Ex. 1004, Fig. 3; Ex. 1005, Fig. 1; Ex. 1002 ¶ 408).

Petitioner further contends that "a POSITA would have been motivated to modify the display assembly in Ohta by replacing the plasma display with an LCD display" because, as Ohta notes, "plasma displays suffer from poor contrast due to reflection of external light onto the display." Pet. 84–85 (citing Ex. 1004 ¶ 13). Petitioner contends that the methods Ohta teaches to address this problem (dyeing the cooling fluid, coloring the face plate) "have the downside of darkening the images being shown on the display." *Id.* at 85 (citing Ex. 1004 ¶¶ 22–23; Ex. 1002 ¶ 408). According

to Petitioner, "[i]n contrast, the liquid crystal panel in Marumoto provides strong contrast without the need for colored equipment or dyed fluids." *Id.* (citing Ex. 1002 ¶ 411).

In response, Patent Owner argues that "there are at least three reasons why a POSITA would not be motivated to replace a display containing a plasma display with an LCD display." PO Resp. 39. Specifically, Patent Owner argues that plasma displays had better contrast, a broader viewing area, and a better response rate than LCD displays at the time of the invention. *Id.* (citing Ex. 2024 ¶ 146). Often, however, a particular combination will have simultaneous advantages and disadvantages and this does not necessarily obviate motivation to combine. *See Medichem, S.A. v. Rolabo, S. L.*, 437 F.3d 1157, 1165 (Fed. Cir. 2006). Ohta teaches that reflection of external light onto the plasma display results in poor contrast, which Ohta teaches can be mitigated by coloring the coolant fluid black or using a colored face plate. Ex. 1004 ¶¶ 13, 22–23. On this record, we find Petitioner's argument persuasive that using colored fluids darkened the images on the display, and the LCD display taught in Marumoto would eliminate the need to use dyed fluids or a colored face plate to address this problem. Pet. 84–85. Moreover, as Petitioner notes, exchanging the cooling fluid in Ohta with the cooling gas in Marumoto not only would reduce maintenance costs, prevent leakage of liquid fluid, and reduce energy costs, it would also remove the need for dyed pigment, which would also produce cost savings. Pet. 83–84 (citing Ex. 1002 ¶¶ 406, 408); *see also DyStar Textilfarben GmbH & Co. Deutschland KG v. C.H. Patrick Co.*, 464 F.3d 1356, 1368 (Fed. Cir. 2006) ("[A]n implicit motivation to combine exists not only when a suggestion may be gleaned from the prior art as a

whole, but when the 'improvement' is technology-independent and the combination of references results in a product or process that is more desirable, for example because it is stronger, cheaper, cleaner, faster, lighter, smaller, more durable, or more efficient are universal motivators to combine/modify prior art.").

We have considered Patent Owner's other arguments, and find them unavailing. For example, Patent Owner argues that Ohta and Marumoto "are directed toward different fields of art, and the solutions for cooling a smaller plasma display are not reasonably pertinent to the unique cooling needs of LCD displays, especially large format information displays." PO Resp. 38 (citing Ex. 1013, 1:4–6; Ex. 1004 ¶¶ 1–3). To support this argument, Patent Owner directs us to three lines in Yare and three paragraphs in Ohta. The citation to Yare is not relevant to the combination of Ohta and Marumoto, and a citation to Ohta alone does not support contentions that are directed to Ohta *and* Marumoto. Moreover, to the extent that Patent Owner's argument is directed to the cooling needs of "large format LCD displays," we note that the challenged claims are not directed to any particular display size. Patent Owner's conclusory arguments do not overcome Petitioner's arguments, which are supported by the evidence of record.

Having considered the complete trial record, we are persuaded that a POSITA would have been motivated to combine the teachings of Ohta and Marumoto as proposed with a reasonable expectation of success. Pet. 83–85.

*e) Conclusion: Claim 1*

Other than the arguments discussed above, Patent Owner does not dispute Petitioner's evidence that the combination of Ohta and Marumoto

teaches the limitations of claim 1. *See* PO Resp. We also reviewed Petitioner's explanations and supporting evidence as to how the combination of Ohta and Marumoto teaches the other limitations of claim 1, and we agree with, and adopt as our own, Petitioner's analysis. Pet. 67–69; Ex. 1002 ¶¶ 308–314. Accordingly, we find that the combination of Ohta and Marumoto teaches all of the limitations recited in claim 1. Pet. 65–70; Ex. 1002 ¶¶ 298–318. We are also persuaded, for the reasons set forth in the Petition, that a POSITA would have been motivated to combine the teachings of Ohta and Marumoto as proposed with a reasonable expectation of success. Pet. 83–85; Ex. 1002 ¶¶ 405–414.

*4. Analysis of Claims 4, 8, 10, and 11*

Petitioner contends that the combination of Ohta and Marumoto teaches all of the elements of claims 4, 8, 10, and 11, which directly depend from claim 1. Pet. 70, 72–74; Ex. 1002 ¶¶ 319–321, 326–329, 334–344. Patent Owner does not dispute that the combination of Ohta and Marumoto teaches the limitations of these claims. *See* PO Resp. Having reviewed the parties' arguments and evidence, we are persuaded that Petitioner's discussion of the particular structures in Ohta and Marumoto, and the explanations in the Petition and the Smith-Gillespie Declaration, shows that the combination of Ohta and Marumoto teaches all of the limitations of claims 4, 8, 10, and 11. Pet. 70, 72–74; Ex. 1002 ¶¶ 319–321, 326–329, 334–344.

*5. Analysis of Claim 12*

Petitioner contends that the combination of Ohta and Marumoto teaches all of the elements of independent claim 12. Pet. 74–75; Ex. 1002 ¶¶ 345–356.

*a) "a housing"*

Petitioner contends that the combination of Ohta and Marumoto teaches "a housing" as recited in claim 12 for the reasons set forth with respect to the "an electronic display housing" limitation of claim 1. Pet. 74 (citing *id*. at 65 (§ X.A.2); Ex. 1002 ¶ 347). Patent Owner asserts the same arguments in response as it did with respect to the "an electronic display housing" limitation of claim 1. PO Resp. 28–29 ("Claims 1, 12, 18 and 21: Ohta does not render obvious 'a housing'"). Accordingly, for the reasons set forth above with respect to the "an electronic display housing" limitation of claim 1, we find that Petitioner establishes that the combination of Ohta and Marumoto teaches "a housing" as recited in claim 12. *See* Section II.E.3.a, *supra*.

*b) "a liquid crystal display (LCD) positioned within the housing and having a backlight"*

Petitioner contends that the combination of Ohta and Marumoto teaches "a liquid crystal display (LCD) positioned within the housing and having a backlight" because "a POSITA would have been motivated to replace the plasma display in Ohta with the liquid crystal panel in Marumoto and would have had a reasonable expectation of success." Pet. 75, 84–85. Patent Owner responds that "Ohta is exclusively directed to a plasma display," and replacing that plasma display "requires more than simple substitution of one display panel type for another." PO Resp. 31 (citing Ex. 2024 ¶¶ 144–147).

In particular, Patent Owner argues that "LCDs have reduced brightness, and the colored glass and liquid in Example 3 of Ohta would reduce the visibility of the LCD display," requiring structural changes to the

backlight assembly in order to increase brightness. PO Resp. 31 (citing Ex. 2024 ¶ 145). As set forth above, however, Petitioner's proposal to exchange the cooling fluid in Ohta with the cooling gas in Marumoto would also remove the need for dyed pigment or colored glass. *See* Section II.E.3.d, *supra*. Accordingly, we disagree with Patent Owner that "modifying Ohta with Marumoto would require additional design experimentation to determine the desired glass and liquid consistency in Ohta's closed loop of liquid over the front surface of the LCD in order to maintain a visible and bright display." PO Resp. 31 (citing Ex. 2024 ¶ 165).

Having considered the complete trial record, we find that Petitioner establishes that the combination of Ohta and Marumoto teaches the "a liquid crystal display (LCD) positioned within the housing and having a backlight" limitation of claim 12. Pet. 75, 84–85; Ex. 1002 ¶¶ 348–352, 409–412; Section II.E.3.d, *supra*.

*c) "wherein the electronic display is coolable by a combination of a closed loop of isolated gas which circulates within the housing and an open loop of ambient air which passes through the housing and along the backlight"*

Petitioner contends that "Ohta in combination with Marumoto teach an LCD display that is coolable by a closed loop of isolated gas" for the reasons set forth with respect to the "a gas-containing closed loop gas cooling chamber located with the electronic display housing" and "the electronic display is coolable by . . . gas circulation within the closed loop gas cooling chamber" limitations of claim 1. Pet. 75 (citing *id*. at 66–70 (§§ X.A.3–4, X.A.6), 74–75 (§ X.H.3)). Patent Owner asserts the same arguments in response as it did with respect to the identified limitations in claim 1. PO Resp. 32–33 ("Claims 1, 12, and 22: Ohta does not render

obvious 'a closed loop' of 'isolated gas'"), 36 ("Claims 1, 12, and 21: Neither Ohta nor Marumoto renders obvious 'coolable by a combination' of a closed loop and an ambient loop airflow pathway"). Accordingly, for the reasons set forth above with respect to the "a gas-containing closed loop gas cooling chamber located within the electronic display housing" and "the electronic display is coolable by . . . gas circulation within the closed loop gas cooling chamber" limitations of claim 1, we find that Petitioner establishes that the combination of Ohta and Marumoto teaches "the electronic display is coolable by . . . a closed loop of isolated gas which circulates within the housing" as recited in claim 12. *See* Section II.E.3.b–c, *supra*.

Petitioner also contends:

> In Ohta as modified by Marumoto, the backlight in the liquid crystal panel is located between the electronic display and heat sink 5. It would have been obvious to modify the open loop of ambient air directed to a heat sink on Ohta to direct the air through the housing, heat sink 5 and the rear surface of the display (which contains the backlight) because, like the heat sink 5, the backlight generates heat.

Pet. 75 (citing *id*. at 67–72 (§§ X.A.4, X.A.6, X.C); Ex. 1002 ¶ 355). Petitioner contends that "the structure for the example in Marumoto demonstrates that the backlight in a liquid crystal panel should be cooled and would motivate a POSITA to do so." *Id*. (citing Ex. 1005, Fig. 1; Ex. 1002 ¶ 351).

Patent Owner responds that Ohta only describes a plasma display, which does not have a backlight, and "describes one external airflow pathway—and that pathway flows along the front surface of the plasma display in Example 5, not Example 3." PO Resp. 34. Patent Owner argues

that "Ohta does not discuss the location of the heat sinks within the overall configuration of a housing, much less positioning those heat sinks proximally or along a backlight." *Id.* (citing Ex. 2024 ¶ 156). Patent Owner also argues that "Ohta only describes one aspect of cooling a plasma panel, it does not provide details as to the overall cooling and configuration of the electronic display assembly." *Id.* at 35. These arguments improperly attack the references individually, rather than as part of the asserted combination. Nonobviousness cannot be established by attacking the references individually when the ground of unpatentability is predicated upon a combination of prior art disclosures. *See In re Merck & Co., Inc.*, 800 F.2d 1091, 1097 (Fed. Cir. 1986).

In any event, Ohta teaches that "it is also acceptable for the heat sink to be forcibly air-cooled or cooled by a method such as fluid cooling or the like," and also describes examples of cooling devices that employ fans within the assembly. Ex. 1004 ¶¶ 24, 31, 33, 35–36, Figs. 5, 6. An obviousness analysis "can take account of the inferences and creative steps that a person of ordinary skill in the art would employ." *KSR Int'l Co. v. Teleflex, Inc.*, 550 U.S. 398, 418 (2007). Moreover, "[a] person of ordinary skill is also a person of ordinary creativity, not an automaton." *Id.* at 421. Here, a POSITA would have had "experience in working with electronic displays" and "an understanding of product design issues and failure modes associated with electronic displays." Section II.A, *supra*; Pet. 7. There is nothing in the record that indicates that adding a fan to a cooling device (such as the one in Ohta as modified by Marumoto) would have been outside the ordinary skill in the art.

Having considered the complete trial record, we find that Petitioner establishes that the combination of Ohta and Marumoto teaches the "wherein the electronic display is coolable by a combination of a closed loop of isolated gas which circulates within the housing and an open loop of ambient air which passes through the housing and along the backlight" limitation of claim 12. Pet. 75, 84–85; Ex. 1002 ¶¶ 348–352, 409–412; Section II.E.3.d, *supra*.

*d) Conclusion: Claim 12*

After considering Petitioner's and Patent Owner's positions, as well as their supporting evidence, we find that the combination of Ohta and Marumoto teaches all of the limitations recited in claim 12. Pet. 74–75; Ex. 1002 ¶¶ 345–356. We are also persuaded, for the reasons set forth in the Petition, that a POSITA would have been motivated to combine the teachings of Ohta and Marumoto as proposed with a reasonable expectation of success. Pet. 83–85; Ex. 1002 ¶¶ 405–414.

*6. Analysis of Claims 13, 14, and 16*

Petitioner contends that the combination of Ohta and Marumoto teaches all of the elements of claims 13, 14, and 16, which directly depend from claim 12. Pet. 76–78; Ex. 1002 ¶¶ 357–366, 368–370. Patent Owner does not dispute that the combination of Ohta and Marumoto teaches the limitations of these claims. *See* PO Resp. Having reviewed the parties' arguments and evidence, we are persuaded that Petitioner's discussion of the particular structures in Ohta and Marumoto, and the explanations in the Petition and the Smith-Gillespie Declaration, shows that the combination of Ohta and Marumoto teaches all of the limitations of claims 13, 14, and 16. Pet. 76–78; Ex. 1002 ¶¶ 357–366, 368–370.

*7. Analysis of Claims 5 and 17*

Claim 5 depends from claim 1 and additionally recites "wherein: the closed loop gas cooling chamber and the ambient air pathway are configured such that gas circulation within the gas cooling chamber will occur in a direction that is substantially perpendicular to the direction that ambient air will flow through the electronic display housing." Ex. 1001, 6:35–40. Claim 17 depends from claim 12 and additionally recites "the intended direction of closed loop isolated gas flow is substantially perpendicular to the intended direction of open loop of ambient air flow." *Id.* at 7:31–34. Petitioner relies on the same arguments with respect to the additional limitations in claims 5 and 17. Pet. 70–72 (discussing claim 5), 78 (discussing claim 17 (citing *id.* at 70–72 (§ X.C))).

Petitioner contends that "[a]s shown in Ohta Figure 3, while air within the closed loop gas cooling chamber in Ohta as modified by Marumoto moves in both vertical and horizontal directions, it moves predominantly in a vertical direction." Pet. 70 (citing Ex. 1002 ¶ 323). Petitioner also contends that "[a] POSITA would understand that the fan which cools the heat sinks 5 could be located in multiple different areas to optimize thermal performance." *Id.* at 71 (citing Ex. 1002 ¶ 324). In particular, Petitioner contends that a POSITA would both "seek to blow ambient air on a substantial portion of the heat sink in order to facilitate removal of heat," and "be motivated to have some ambient air access the rear surface of the LCD display so as to dissipate heat generated by the backlight." *Id.* (citing Ex. 1002 ¶ 324). According to Petitioner, a POSITA would achieve both goals by placing "the fan in the middle of the display so that air passes along the rear surface of the LCD display and through a portion of the heat sink as

shown" in an annotated version of Ohta's Figure 3, reproduced below. *Id.* at 71–72 (citing Ex. 1002 ¶ 324).

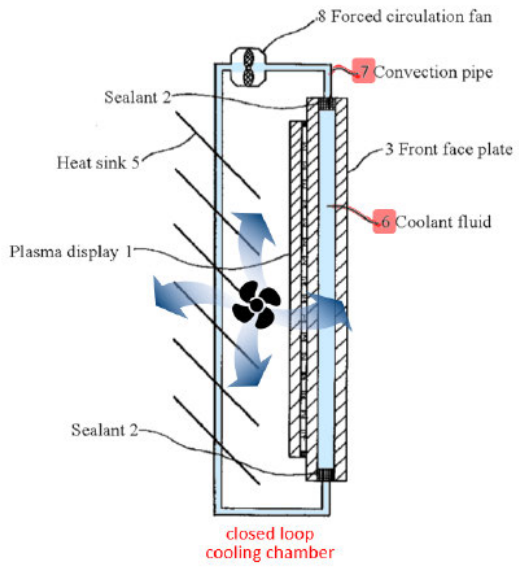


Annotated Figure 3 is a lateral cross-section of the cooling device as described in Ohta's embodiment example 3, with Petitioner's addition of a fan in the center of the closed loop cooling chamber with arrows pointing up, down, to the left, and to the right. Ex. 1004 ¶ 37, Fig. 3. Petitioner contends that "[t]he ambient air thus flows in a third direction that is perpendicular to the airflow in the closed loop cooling chamber (e.g., toward the viewer) and, again, occurs in a manner similar to what is disclosed in the ['287 patent] specification." Pet. 71 (citing Ex. 1002 ¶ 324; Ex. 1001, Fig. 1).

Patent Owner responds that "Ohta does not describe the orientation of any of its airflows within the housing" and Petitioner "speculates as to the direction of airflow in order to meet the claim limitations." PO Resp. 37 (citing Ex. 2024 ¶¶ 161–162). Patent Owner also argues that "Marumoto is silent as to the intended direction of airflow." *Id.* at 38 (citing Ex. 2024 ¶ 163).

As explained above in Section II.E.5.c, Ohta teaches forcibly cooling the heat sink and describes cooling devices that employ fans within the assembly. Ex. 1004 ¶¶ 24, 31, 33, 35–36, Figs. 5, 6. Moreover, because "[a] person of ordinary skill is also a person of ordinary creativity, not an automaton," and the level of skill in the art here includes "an understanding of product design issues and failure modes associated with electronic displays," we are persuaded that positioning a fan within a cooling device (such as the one in Ohta as modified by Marumoto) to cool both the heat sink and the LCD display would have been within a POSITA's abilities. *KSR*, 550 U.S. at 421; Section II.A, *supra*; Pet. 7.

After considering Petitioner's and Patent Owner's positions, as well as their supporting evidence, we find that the combination of Ohta and Marumoto teaches all of the limitations recited in claims 5 and 17. Pet. 70–72 (discussing claim 5), 78 (discussing claim 17 (citing *id*. at 70–72 (§ X.C))); Ex. 1002 ¶¶ 322–325, 371–372.

*8. Analysis of Claims 9 and 15*

Claim 9 indirectly depends from claim 1, and further recites "one or more electronic devices for operating the electronic display positioned within the sealed plenum." Ex. 1001, 6:56–59. Claim 15 depends from claim 12, and further recites "one or more electronic components for driving the LCD positioned within the rear cooling chamber." *Id*. at 7:22–25. Petitioner relies on the same arguments with respect to the additional limitations in claims 9 and 15. Pet. 73 (discussing claim 9), 78 (discussing claim 15 (citing *id*. at 73 (§ X.E))).

Petitioner contends that "Ohta teaches that forced circulation fan 8 is located within the closed loop cooling chamber" and "'is furnished with . . .

an external power supply (which may be shared with the drive circuit of the plasma display panel).'" Pet. 73 (citing Ex. 1004 ¶ 19, Fig. 3). Petitioner contends that "[a] POSITA would understand that a power supply shared with the drive circuit for the display is an electronic device for operating the display." *Id.* (citing Ex. 1002 ¶ 332). Mr. Smith-Gillespie additionally testifies that Ohta's power supply "necessarily is positioned within the sealed plenum," but includes no evidence or explanation supporting this testimony. Ex. 1002 ¶ 332.

Patent Owner responds that "[b]oth Ohta and Marumoto are silent as to the location of the electronics for driving the LCD (or display) and how those components are cooled." PO Resp. 36 (citing Ex. 2024 ¶ 159). Patent Owner also argues that "Ohta's closed loop is filled with liquid, teaching away from including any electronics within that area to avoid damaging the circuitry or creating short circuits." *Id.* at 37 (citing Ex. 2024 ¶ 159); PO Sur-reply 15.

Based on our review of the record, we determine that Petitioner has not shown by a preponderance of the evidence that the combination of Ohta and Marumoto teaches "one or more electronic devices for operating the electronic display positioned within the sealed plenum" as recited in claim 9 or "one or more electronic components for driving the LCD positioned within the rear cooling chamber" as recited in claim 17.

Ohta teaches:

> The top and bottom ends of the interior of the airtight container formed between the front face plate 3 and the display face of the plasma display panel 1 are connected by means of a convection tube 7, and heat sinks 5 and a forced circulation fan 8 are formed along the length of the convection tube 7. The forced circulation fan 8 is furnished with a temperature detection device such as a

> thermostat or the like to detect the temperature of the plasma display panel 1 and an external power supply (which may be shared with the drive circuit of the plasma display panel) to drive the fan (not shown in the drawing).

Ex. 1004 ¶ 19. Ohta further teaches that "[t]he interior of the airtight container formed between the front face plate 3 and the display face of the plasma display panel 1 and the convection tube 7 is filled with coolant fluid 6," and coolant fluid 6 circulates within the interior of the airtight container "and within the interior of the convection tube." *Id.* ¶¶ 19, 21. Taken together, these disclosures in Ohta teach that forced circulation fan 8 is located along—not within—convection tube 7, which is consistent with Ohta's teaching that coolant fluid 6 circulates within convection tube 7. Thus, to the extent that convection tube 7 is the claimed sealed plenum[5] or rear cooling chamber, forced circulation fan 8's external power source is not "positioned within the sealed plenum" or "positioned within the rear cooling chamber." Although we recognize that, in Petitioner's proposed combination, Ohta's coolant fluid would be replaced by Marumoto's cooling gas, Petitioner does not argue that the location of forced circulation fan 8's external power source would change from Ohta's teaching that includes coolant fluid 6 within the system. And neither Petitioner nor Mr. Smith-Gillespie adequately addresses how Ohta's forced circulation fan 8 (and its external power source) could be located in the sealed plenum or rear cooling chamber at the same time as coolant fluid 6.

---

[5] Petitioner alternatively argues that "Ohta teaches a front face plate 3 which operates as a sealed plenum which prevents ambient air from entering the plenum." Pet. 72 (discussing claim 8, citing Ex. 1002 ¶ 328; Ex. 1004, Fig. 3). Petitioner does not argue that any electronic devices are within this alternative sealed plenum. *See id.* at 73 (discussing claim 9).

For these reasons, we find that Petitioner does not establish that the combination of Ohta and Marumoto teaches "one or more electronic devices for operating the electronic display positioned within the sealed plenum" as recited in claim 9 or "one or more electronic components for driving the LCD positioned within the rear cooling chamber" as recited in claim 15.

*9. Analysis of Claims 18–20*

Petitioner contends that the combination of Ohta and Marumoto teaches all of the limitations of independent claim 18. Pet. 79–80; Ex. 1002 ¶¶ 372–385. Claim 18 recites, in relevant part, "a rear cooling chamber positioned behind the electronic display and containing an electrical component which is electrically connected to the electronic display." Ex. 1001, 7:38–40. Petitioner argues that Ohta discloses "an electrical component is located in the sealed rear cooling chamber," relying on the arguments it made with respect to the similar limitation in claim 9, discussed above. Pet. 79 (citing *id*. at 73 (§ X.E)). For the same reasons discussed above with respect to claims 9 and 15, we are not persuaded by that argument.

Petitioner then argues that "Marumoto discloses a temperature control component 3 located in the rear cooling chamber of the closed loop" and "temperature control component 3 is an electrical component electrically connected to the display through temperature sensor 2." Pet. 79 (citing Ex. 1005, Fig. 1; Ex. 1002 ¶ 379). But Petitioner does not argue that a POSITA would have modified Ohta's rear cooling chamber to include Marumoto's temperature control component, and does not rely on Marumoto's rear cooling chamber to meet the limitations of the claims. Because neither Petitioner nor Mr. Smith-Gillespie adequately explains how

and why a POSITA would have applied Marumoto's teaching to the proposed combination, we find this argument unavailing. *See KSR*, 550 U.S. at 418 ("a patent composed of several elements is not proved obvious merely by demonstrating that each of its elements was, independently, known in the prior art.").

Finally, Petitioner argues that "it would have been obvious to place an electrical component that is electrically connected to the electronic display (such as a programmable logic controller or power supply) in the rear chamber of the closed loop in Ohta, as modified by Marumoto, in order to cool it." Pet. 80 (citing *id*. at 78 (§ X.K); Ex. 1002 ¶ 380). Petitioner cites the Smith-Gillespie Declaration to support this contention, but Mr. Smith-Gillespie simply repeats the conclusory argument made in the Petition without any further evidentiary support or explanation, and we give his testimony in this regard little weight. *See Xerox Corp. v. Bytemark, Inc.*, IPR2022-00624, Paper 9 at 15 (PTAB Aug. 24, 2022) (precedential). Petitioner also cites the arguments it made with respect to claim 15 that in turn relies on Petitioner's arguments with respect to claim 9, which we do not find persuasive for the reasons set forth above with respect to claims 9 and 15. Section II.E.8, *supra*.

Accordingly, we find that Petitioner does not establish that the combination of Ohta and Marumoto teaches "a rear cooling chamber positioned behind the electronic display and containing an electrical component which is electrically connected to the electronic display" as recited in claim 18.

Claims 19 and 20 directly depend from claim 18, and therefore include the "a rear cooling chamber positioned behind the electronic display

and containing an electrical component which is electrically connected to the electronic display" limitation of claim 18. Ex. 1001, 8:5–12. Thus, we also conclude that Petitioner does not demonstrate by a preponderance of the evidence that claims 19 and 20 would have been obvious over the combination of Ohta and Marumoto.

*10. Analysis of Claim 21*

Petitioner contends that the combination of Ohta and Marumoto teaches all of the limitations of independent claim 21. Pet. 81–82; Ex. 1002 ¶¶ 390–397.

*a) "an electronic display housing"*

Petitioner contends that the combination of Ohta and Marumoto teaches the "an electronic display housing" limitation of claim 21 for the reasons set forth above with respect to the same limitation in claim 1. Pet. 81 (citing *id*. at 65 (§ X.A.1); Ex. 1002 § 392). Patent Owner asserts the same arguments in response as it did with respect to the "an electronic display housing" limitation of claim 1. PO Resp. 28–29 ("Claims 1, 12, 18 and 21: Ohta does not render obvious "a housing"). Accordingly, for the reasons set forth above with respect to the "an electronic display housing" limitation of claim 1, we find that Petitioner establishes that the combination of Ohta and Marumoto teaches "an electronic display housing" as recited in claim 21. *See* Section II.E.3.a, *supra*.

*b) "the electronic display is coolable by a combination of closed loop cooling gas circulation within the electronic display housing, and ambient air flow through the open loop ambient air pathway in the electronic display housing"*

Petitioner contends that the combination of Ohta and Marumoto teaches "the electronic display is coolable by a combination of closed loop

cooling gas circulation within the electronic display housing, and ambient air flow through the open loop ambient air pathway in the electronic display housing" as recited in claim 21 for the reasons set forth with respect to the similar limitation in claim 1. Pet. 82 (citing *id*. at 69–70 (§ X.A.6); Ex. 1002 ¶ 397). Patent Owner asserts the same arguments in response as it did with respect to the "the electronic display is coolable by a combination of gas circulation within the closed loop gas cooling chamber and ambient air flow through the open loop ambient air pathway in the electronic display housing" limitation of claim 1. PO Resp. 36 ("Claims 1, 12, and 21: Neither Ohta nor Marumoto renders obvious 'coolable by a combination' of a closed loop and an ambient loop airflow pathway"). Accordingly, for the reasons set forth above with respect to the similar limitation of claim 1, we find that Petitioner establishes that the combination of Ohta and Marumoto teaches "the electronic display is coolable by a combination of closed loop cooling gas circulation within the electronic display housing, and ambient air flow through the open loop ambient air pathway in the electronic display housing" as recited in claim 21. *See* Section II.E.3.c.

*c) Conclusion: Claim 21*

Other than the arguments discussed above, Patent Owner does not dispute Petitioner's evidence that the combination of Ohta and Marumoto teaches the limitations of claim 21. *See* PO Resp. We also reviewed Petitioner's explanations and supporting evidence as to how the combination of Ohta and Marumoto teaches the other limitations of claim 21, and we agree with, and adopt as our own, Petitioner's analysis. Pet. 81–82; Ex. 1002 ¶¶ 391, 393–396. Accordingly, we find that the combination of Ohta and Marumoto teaches all of the limitations recited in claim 21.

Pet. 81–82; Ex. 1002 ¶¶ 390–397. We are also persuaded that a POSITA would have been motivated to combine the teachings of Ohta and Marumoto as proposed with a reasonable expectation of success. *See* Section II.E.3.d, *supra*.

*11. Analysis of Claims 22 and 23*

Petitioner contends that the combination of Ohta and Marumoto teaches all of the limitations of claim 22, which depends from claim 21, and claim 23, which depends from claim 22. Pet. 82–83; Ex. 1002 ¶¶ 398–404. Patent Owner argues that the combination of Ohta and Marumoto does not teach the "the closed loop of cooling gas is isolated within a continuous loop gas cooling chamber" element of claim 22 for the same reasons set forth with respect to the "a gas-containing closed loop gas cooling chamber located within the electronic display housing" limitation of claim 1. PO Resp. 32–33 ("Claims 1, 12, and 22: Ohta does not render obvious a 'closed loop' of 'isolated gas'"). For the reasons set forth above with respect to claim 1, we disagree with Patent Owner's arguments. Section II.E.3.b, *supra*.

Other than the arguments discussed above, Patent Owner does not dispute Petitioner's evidence that the combination of Ohta and Marumoto teaches the limitations of claim 22, and claim 23 that depends therefrom. *See* PO Resp. We also reviewed Petitioner's explanations and supporting evidence as to how the combination of Ohta and Marumoto teaches the other limitations of claims 22 and 23, and we agree with, and adopt as our own, Petitioner's analysis. Pet. 82–83; Ex. 1002 ¶¶ 398–404. Accordingly, we find that the combination of Ohta and Marumoto teaches all of the limitations recited in claims 22 and 23. We are also persuaded that a

POSITA would have been motivated to combine the teachings of Ohta and Marumoto as proposed with a reasonable expectation of success. *See* Section II.E.3.d, *supra*.

*F. Asserted Obviousness over Ohta, Marumoto, and Yare*

Petitioner contends that claims 1, 4, 5, and 8–23 would have been obvious over the combined teachings of Ohta, Marumoto, and Yare. Pet. 86–87; Ex. 1002 ¶¶ 415–421. We already determined that claims 1, 4, 5, 8, 10–14, 16, 17, and 21–23 are unpatentable over Ohta and Marumoto, and that claims 12–23 are unpatentable over Karppanen. *See* Sections II.C, II.E, *supra*. Thus, we need only address whether claim 9 would have been obvious over the combined teachings of Ohta, Marumoto, and Yare.

*1. Analysis of Claim 9*

Claim 9 indirectly depends from claim 1, and further recites "one or more electronic devices for operating the electronic display positioned within the sealed plenum." Ex. 1001, 6:56–59. Petitioner contends that, "to the extent that the combination of Ohta and Marumoto does not disclose or suggest a housing for use with a combined open and closed loop cooling system, it would have been obvious to include a housing such as that disclosed by Yare." Pet. 86–87. We already determined that Petitioner establishes that the combination of Ohta and Marumoto teaches or suggests the claimed housing. *See* Section II.E.3a, *supra*. Petitioner does not rely on Yare with respect to the other limitations in claim 9. Pet. 86–87.

Accordingly, for the reasons set forth above with respect to Petitioner's challenge of claim 9 based on the combination of Ohta and Marumoto, we determine that Petitioner has not shown by a preponderance of the evidence that the combination of Ohta, Marumoto, and Yare teaches

"one or more electronic devices for operating the electronic display positioned within the sealed plenum" as recited in claim 9. Section II.E.8, *supra*.

*G. Asserted Obviousness over Kitamura and Harris*

Petitioner contends that claims 12–20 would have been obvious over the combined teachings of Kitamura and Harris. Pet. 87–102. Because we find that Karppanen teaches all of the limitations recited in claims 12–20, we decline to address this ground.

*H. Mr. Smith-Gillespie's Testimony*

Patent Owner argues that Mr. Smith-Gillespie's testimony is entitled to little weight given that it "largely parrots the Petition without any elaboration or supporting evidence." PO Resp. 8 (citing *Xerox*, IPR2022-00624, Paper 9 at 15[6]). In *Xerox*, the Board gave a declarant's testimony little weight where it merely repeated a petitioner's conclusory assertions and it did not include any technical reasoning or underlying factual support. *Xerox*, Paper 9 at 15. In conformity with *Xerox*, we accorded appropriate weight to the declarants' testimony in our analysis based on, *inter alia*, whether such testimony is supported by underlying evidence. We decline to discount Mr. Smith-Gillespie's testimony based solely on similarities with the Petition.

*I. Objective Indicia of Nonobviousness*

As part of our obviousness analysis, we also consider whether objective indicia of nonobviousness (i.e., secondary considerations) may lead to a conclusion that the challenged claims would not have been obvious.

---

[6] Patent Owner mistakenly cites to page 18, but the context makes clear that Patent Owner intended to cite page 15.

*See, e.g.*, *Stratoflex, Inc. v. Aeroquip Corp.*, 713 F.2d 1530, 1538–39 (Fed. Cir. 1983) (instructing that evidence of secondary considerations, when present, must always be considered in determining obviousness). Objective evidence of nonobviousness may include evidence of commercial success, licensing, copying, praise by others, long felt but unresolved need, and failure or skepticism of others. *Graham*, 383 U.S. at 17–18. But secondary considerations are only a part of the "totality of the evidence"; its mere existence does not control the conclusion of obviousness. *See Richardson Vicks Inc. v. Upjohn Co.*, 122 F.3d 1476, 1483 (Fed. Cir. 1997). Objective evidence of nonobviousness "may often be the most probative and cogent evidence in the record" and "may often establish that an invention appearing to have been obvious in light of the prior art was not." *Transocean Offshore Deepwater Drilling, Inc. v. Maersk Drilling USA, Inc.*, 699 F.3d 1340, 1349 (Fed. Cir. 2012).

Objective evidence of nonobviousness "is only relevant to the obviousness inquiry 'if there is a nexus between the claimed invention and the [objective indicia of nonobviousness].'" *In re Affinity Labs of Tex., LLC*, 856 F.3d 883, 901 (Fed. Cir. 2017) (quoting *Ormco Corp. v. Align Tech., Inc.*, 463 F.3d 1299, 1312 (2006)). A "nexus" is a legally and factually sufficient connection between the objective evidence and the claimed invention such that the objective evidence should be considered in the determination of obviousness. *Henny Penny Corp. v. Frymaster LLC*, 938 F.3d 1324, 1332 (Fed. Cir. 2019); *see In re Paulsen*, 30 F.3d 1475, 1482 (Fed. Cir. 1994). A presumption of nexus arises where "the patentee shows that the asserted objective evidence is tied to a specific product and that product 'embodies the claimed features, and is coextensive with them.'"

*Fox Factory, Inc. v. SRAM, LLC*, 944 F.3d 1366, 1373 (Fed. Cir. 2019) (quoting *Polaris Indus., Inc. v. Arctic Cat, Inc.*, 882 F.3d 1056, 1072 (Fed. Cir. 2018) (quoting *Brown & Williamson Tobacco Corp. v. Philip Morris Inc.*, 229 F.3d 1120, 1130 (Fed. Cir. 2000))); *see also Teva Pharms. USA, Inc. v. Sandoz, Inc.*, 723 F.3d 1363, 1372 (Fed. Cir. 2013) (explaining that a "presumption of a nexus" exists where a product is "coextensive" with a patent claim). If, however, the patented invention is only a component of the commercial embodiment, the patentee is not entitled to a presumption of nexus. *Fox Factory*, 944 F.3d at 1374. In addition, "[a] patent claim is not coextensive with a product that includes a 'critical' unclaimed feature that is claimed by a different patent and that materially impacts the product's functionality." *Id.* at 1375. But "[a] finding that a presumption of nexus is inappropriate does not end the inquiry into secondary considerations;" rather, "the patent owner is still afforded an opportunity to prove nexus by showing that the evidence of secondary considerations is 'the direct result of the unique characteristics of the claimed invention.'" *Id.* at 1374 (quoting *In re Huang*, 100 F.3d 125, 140 (Fed. Cir. 1996)). Patent Owner bears the burden of establishing that a nexus exists between the evidence of secondary considerations and the patented invention. *Id.* at 1373.

*1. Failure of Others*

Patent Owner argues that "Samsung is undoubtedly an industry leader, yet it repeatedly failed in its effort to develop outdoor LCD displays." PO Resp. 56. Specifically, Patent Owner asserts that Samsung began outdoor LCD display development at least by 2005. *Id.* (citing Ex. 2029, 45:22–46:11). Patent Owner asserts that Samsung "did not begin producing a working outdoor electronic display product for many years, until 2010–

2012" and "[t]hat display made use of an air-conditioning unit to cool the display." *Id*. (citing Ex. 2029, 46:16–21, 47:17–20). Patent Owner asserts that "Samsung first released an outdoor electronic display that did not use refrigeration (referred to as the 'OHD' series) sometime between 2013 and 2016," but "the OHD series overheated in the field and needed to be re-designed." *Id*. at 57 (citing Ex. 2029, 49:9–17, 51:1–9). Patent Owner argues that "Samsung's 5–7 year gap between beginning research and launching an outdoor display product illustrates the difficulty of the problems involved, even for a company like Samsung that holds itself out as a 'relentless' innovator." *Id*. (citing Ex. 2028, 4; Ex. 2038, 69).

Petitioner argues that Samsung did not fail. Pet. Reply 23. According to Petitioner, former Samsung engineer "Sung Ki Kim's testimony that Samsung started researching outdoor displays around 2005 but did not launch a product until 2010–2012 does not establish failure." *Id*. (citing PO Resp. 55–57). Petitioner argues that "[t]here is no evidence that Samsung worked on the display continuously during that time or that it had any difficulties." *Id.* Petitioner also argues Patent Owner did not establish that "these prior attempts failed because the devices lacked the claimed features." *Id*. (quoting *Ormco*, 463 F.3d at 1313).

The record evidence does not support Patent Owner's assertion that Samsung "repeatedly failed in its effort to develop outdoor LCD displays." As Patent Owner noted, Samsung marketed an outdoor display product in the 2010–2012 time frame, which undermines at least part of Patent Owner's repeated failures narrative. Ex. 2029, 46:12–47:22. We also disagree with Patent Owner's assertion that "[t]estimony from Samsung's engineer establishes failures spanning a decade." PO Sur-reply 22 (citing Ex. 2029,

46:7–15, 46:16–47:22, 51:1–9, 53:1–4). Although testimony from Samsung engineer Sung Ki Kim indicated that the OHD product may become overheated in some circumstances, that alone does not establish that the OHD product was a failure. Indeed, Patent Owner characterizes the solution to the alleged failures as "effective cooling," which is subjective and leaves much to speculation. *See* PO Resp. 55 ("[C]ompanies were attempting to develop effective cooling systems for outdoor displays."). Patent Owner does not specify the meaning of "effective cooling," and, in any event, effectiveness at a particular level is not claimed.

Finally, Patent Owner makes no real attempt to show how Samsung's development efforts failed because of a lack of claimed features. *See Ormco*, 463 F.3d at 1313. It is only in the Sur-reply that Patent Owner asserts in a conclusory fashion that "Samsung's repeated failures all lacked the claimed features." PO Sur-reply 23.

Because the evidence of record supports neither that Samsung was unsuccessful nor that Samsung's development efforts failed due to a lack of claimed features, we accord this evidence little to no weight.

*2. Satisfaction of a Long-Felt Need*

Patent Owner notes that, in the early 2000s, large LCD display screens "faced significant challenges that prevented their use outdoors." PO Resp. 54–55. In particular, Patent Owner asserts that, "[w]hen used outdoors in full sun, screens of this size would overheat because of the increased heat generated from the screen and the additional solar thermal load." *Id.* at 55 (citing Exs. 2025, 2026, 2038, 2047). Patent Owner cites a 2015 Samsung white paper as stating how companies had "wanted their messages outdoors" but "were challenged by a variety of issues during the

early years." *Id*. at 54 (quoting Ex. 2025, 3, 6). Patent Owner also notes how the same Samsung white paper states that "[t]he biggest obstacle was heat—from inside and from the sun. Direct sunlight and its amplified heat could alter the properties of LCD crystals—the display layer of screens—and discolor or cause black blotches." *Id*. (quoting Ex. 2025, 3). The same Samsung white paper also states that outdoor environments posed "enormous engineering challenges." *Id*. (quoting Ex. 2025, 3) (emphasis omitted). As a result, Patent Owner contends that "there was a long-felt need for outdoor displays (which require effective cooling), and MRI developed and claimed displays with an effective cooling system that enabled use outdoors." PO Sur-reply 22.

Petitioner disputes Patent Owner's assertion that there was a need for outdoor displays with cooling technology, because "the claims are not so limited." Pet. Reply 23 (citing *ABT Sys., LLC v. Emerson Elec. Co.*, 797 F.3d 1350, 1362 (Fed. Cir. 2015); PO Resp. 54–55). Petitioner also argues that Patent Owner does not show how the challenged claims satisfy any alleged need. *Id*.

In its Sur-reply, Patent Owner argues that Petitioner "confuses *long-felt need* with the *claimed invention* that meets the need." PO Sur-reply 21 (citing *Volvo Penta of the Americas, LLC v. Brunswick Corp.*, 81 F.4th 1202 (Fed. Cir. 2023)). Patent Owner also disputes Petitioner's assertion based on *ABT Systems* because "unlike here, the prior art taught a system that met the alleged unmet need." *Id*. at 26 n.4 (citing *ABT Systems*, 797 F.3d at 1362).

Patent Owner broadly defines the alleged long-felt need as a need for "effective outdoor display cooling." PO Sur-reply 21. Even if we were to

assume that a long-felt need for effective outdoor cooling existed in the art,[7] and regardless of whether the challenged claims are or are not limited to outdoor cooling, we agree with Petitioner (Pet. Reply 23) that Patent Owner fails to adduce evidence sufficient to show how the claimed invention satisfied the alleged need for effective outdoor cooling. *See Sjolund v. Musland*, 847 F.2d 1573, 1582 (Fed. Cir. 1988) (holding that a proponent of objective evidence of long-felt need must show that "the *claimed invention* satisfied a long felt need"). Patent Owner states in conclusory fashion that "[d]espite the demand for outdoor displays, no one (including Samsung, despite having begun attempting to develop outdoor displays at least by 2005) was successful until Mr. Dunn[8] conceived of the invention." PO Resp. 66–67. Patent Owner cites no evidence for this proposition, so Patent Owner's assertions regarding Mr. Dunn's invention satisfying the alleged need are based on unsupported attorney argument. Accordingly, "we conclude that the nexus between the claimed invention and the purported

[7] We find Patent Owner's articulation of the alleged long-felt need to be vague and subjective. In addition, we note that Patent Owner acknowledges (PO Resp. 64) prior art from Samsung showing it was known to cool displays for outdoor use. *See, e.g.*, Ex. 2033 ¶ 3 (Samsung patent application directed to "a display device that is usable outdoors and prevents . . . a rise in temperature of a display part"); Ex. 2035, 1:18–20, 2:32–47 (Samsung patent directed to "a liquid crystal display device to be installed outdoors" that includes a heat radiating member and fans). This undermines Patent Owner's articulation of the alleged need. Notwithstanding, we dispose of Patent Owner's arguments based on the lack of nexus evidence, as discussed below.

[8] William Dunn is the named inventor of the '287 patent. Ex. 1001, code (72).

long-felt, unmet need is too attenuated to provide a persuasive rationale for nonobviousness." *In re Karpf*, 758 F. App'x 960, 965 (Fed. Cir. 2019).

For these reasons, we accord Patent Owner's evidence of satisfying a long-felt need little to no weight.

*3. Copying*

As further objective evidence that the challenged claims are nonobvious, Patent Owner contends that Samsung's 46- and 55-inch OHF products copied system of claim 12 of the '287 patent. PO Resp. 50–53, 57–59; PO Sur-reply 23–24. Patent Owner cites two documents and testimony from Samsung employees regarding Samsung's teardown and analysis of large-format and mid-sized versions of [redacted] products. PO Resp. 57–59 (citing Ex. 2029, 139:7–16; Ex. 2030, 184:15–191:8; Ex. 2031, 77:13–81:16; Exs. 2042, 2043). Patent Owner also puts forth an annotated schematic that allegedly shows how Samsung's OH products "embody and are coextensive with challenged claim 12 of the '287 patent." *Id.* at 50–52 (Ex. 2024 ¶¶ 193–194; Ex. 2039; Ex. 2053). Patent Owner additionally puts forth evidence from a marketing presentation to [redacted], MRI's teardown of the Samsung OH product, and a Samsung installation guide to support its contentions about how the OH product allegedly practices claim 12. *Id.* at 51–52 (citing Ex. 2039; Ex. 2053), 57–59 (citing Ex. 2038, 13–22). Patent Owner contends this is probative objective evidence of copying because copying merely "requires duplication of features of the patentee's work based on access to that work." PO Sur-reply 23 (quoting *Institut Pasteur & Universite Pierre Et Marie Curie v. Focarino*, 738 F.3d 1337, 1347–48 (Fed. Cir. 2013)).

Petitioner counters that Samsung had already fully designed the cooling scheme for its OH products by the time of Samsung's teardown and analysis of [redacted] products. Pet. Reply 24 (citing Ex. 1044, 612:11–13, 613:14–614:18; Ex. 2040; Ex. 2042, 65). Petitioner also argues that Patent Owner has not identified any features of [redacted] products that Samsung allegedly copied. *Id.* (citing *Iron Grip Barbell Co., Inc. v. USA Sports, Inc.*, 392 F.3d 1317, 1325 (Fed. Cir. 2004)).

We agree with Petitioner that the evidence of record includes a comparison chart between Samsung's products and [redacted] products—and in particular their mid-size 55-inch products—which suggests that Samsung's OH products were already designed at the time of Samsung's competitive teardown and analysis of [redacted] products. *See* Ex. 2042, 65; *cf.* Ex. 1044, 613:14–25 (Mr. Lee testifying that the same comparison chart indicates that the large-format Samsung product has been completed due to its inclusion in this chart). Thus, the evidence of record does not support that Samsung copied the torn-down products when making its OH products.

Further, even if we were to assume that Samsung had access to [redacted] products prior to making its own products, the record does not include sufficient evidence or analysis from Patent Owner showing any feature of [redacted] products that Samsung duplicated. Nor has Patent Owner put forth evidence of substantial similarity between Samsung's products and [redacted] products. *See Medtronic, Inc. v. Teleflex Innovations S.a.r.l.*, 70 F.4th 1331, 1340 (Fed. Cir. 2023) ("Evidence of access and substantial similarity *is* evidence of copying."). "Copying requires *duplication of features of the patentee's work* based on access to that work, lest all infringement be mistakenly treated as copying." *Institut Pasteur*, 738 F.3d

at 1347–48 (emphasis added). At best, Patent Owner has put forth the broad contours of an infringement analysis, which is insufficient to show duplication. *See* PO Resp. 50 (schematic "showing Samsung's infringing use of MRI's innovative dual open and closed loop cooling system with the open loop of ambient air passing through the housing and along the backlight"), 52 ("Samsung products are coextensive with the '287 Patent claims, which are directed to an electronic display that is coolable by a combination of a closed loop and an open loop of ambient air that passes through the housing and along the backlight."), 57 ("Thereafter, Samsung released new versions of its outdoor displays, the OHF series" that "infringes the challenged claims and functions outside and in full sunlight because of their infringing cooling system.").

For these reasons, we accord Patent Owner's evidence of copying little to no weight.

*4. Commercial Success*

Patent Owner asserts that "MRI's own sales increased in mid- to late-2008—shortly after the claimed priority date of the '287 Patent—confirming the commercial success is tied to the novel aspects of the '287 Patent." PO Resp. 60 (citing Ex. 2044). Patent Owner further asserts that "MRI's commercial success has continued to the present, with sales of its large-format products alone totaling over between 2018 and 2022." *Id*. (citing Ex. 2045; Ex. 2046).

Patent Owner asserts that MRI's "55-, 75-, and 85-inch[9] outdoor displays are commercial embodiments of and coextensive with challenged

[9] Patent Owner mistakenly refers to an 86-inch display instead of an 85-inch display.

claim 12 of the '287 Patent." PO Resp. 49 (citing Ex. 2024 ¶¶ 195–197; Ex. 2054). In support of that assertion, Patent Owner provides a claim chart for claim 1 of the '287 patent (Ex. 2054), and three paragraphs of testimony from Dr. Pokharna opining that MRI's 55-, 75-, and 85-inch products generally "practice the claims of the '287 Patent" (Ex. 2024 ¶¶ 195–197). Our reviewing court has rejected such "attempt[s] to reduce the coextensiveness requirement to an inquiry into whether the patent claims broadly cover the product that is the subject of the evidence of secondary considerations." *Fox Factory*, 944 F.3d at 1377.

Patent Owner contends:

> The integration of MRI's intellectual property led to the success of Samsung's OHF and subsequent outdoor displays. Whereas Samsung's predecessor OHD designs (which are not accused of infringement) had less than [redacted] in U.S. sales in their lifetime, Samsung's U.S. sales for its mid-sized OHF and subsequent products (which infringe the '287 Patent) totaled over [redacted] from 2017–2022—a more than [redacted]—with the OH55F product alone having achieved over [redacted] in U.S. sales in a single year, showing Samsung's commercial success.

PO Resp. 60–61 (citing Ex. 2040). Patent Owner asserts that "Samsung's market share grew from [redacted] before entering the outdoor display market) to [redacted] (in 2017 after launch of the Accused Products) to [redacted] (by 2020)." *Id.* at 61 (citing Ex. 2041, 29–30). Patent Owner asserts that Samsung's 46- and 55-inch outdoor displays "embody and are coextensive with challenged claim 12." *Id.* at 50 (citing Ex. 2024 ¶¶ 193–194; Ex. 2039). In support of that contention, provides a claim chart for the challenged claims of the '287 patent (Ex. 2039), and two paragraphs of

testimony from Dr. Pokharna opining that MRI's 46- and 55-inch products generally "practice the claims of the '287 Patent" (Ex. 2024 ¶¶ 193–194).

Although Petitioner does not dispute that Samsung's products have been a commercial success, Petitioner argues that Patent Owner has not attempted to establish a nexus between Samsung's or MRI's products and the challenged claims. Pet. Reply 24. Petitioner also argues that Patent Owner is not entitled to a presumption of nexus based on coextensiveness. *Id*. at 24–25 (citing *Fox Factory*, 944 F.3d at 1373). Petitioner characterizes Patent Owner's arguments about coextensiveness as being conclusory, because "coextensiveness requires more than a showing that the claims cover a product." *Id*. at 25 (citing *Fox Factory*, 944 F.3d at 1377). And Petitioner cites numerous unclaimed features in both Samsung's products (such as "Magic glass," "Slim Design," "IP 56" certification, "High Contrast Ratio," "Brightness Greater than 3,500 nits," and "Remote Management") and MRI's products (such as "Unsurpassed Image Quality," "Extreme Outdoor Durability," "Intelligent Self Optimization," and "IoT Empowered Architecture") that Petitioner contends "are important to customers and drive sales." *Id*. at 25–26 (citing Ex. 1046; Ex. 1048; Ex. 1049, 312:4–22, 316:16–321:4; Ex. 2038, 7). Thus, Petitioner contends that "these products are not coextensive" with the challenged claims, and Patent Owner "has not established a nexus between its own or Samsung's sales and the Challenged Claims." *Id*. (citing *Ormco*, 463 F.3d at 1312).

In its Sur-reply, Patent Owner responds that "almost all the 'features' and 'highlights' that Samsung identifies are, in fact, features or benefits of

the '287 Patent's invention, including the 'slim design' ([Ex. 1001[10]], 5:11–14), water and dust resistant 'IP56' certification (*id.*, 5:28–49), and 'excellent visibility (*id.*, 5:25–28, 9:25–35).'" PO Sur-reply 24. The citations to the '287 patent that Patent Owner provides to support these assertions, however, do not discuss or even suggest the identified feature or benefit. For example, the '287 patent does not have a column 9, and the citations to column 5 do not discuss the identified benefit. Ex. 1001, 5:11–14 (discussing the rear surface of the backlight), 5:25–28 (discussing facilitating air flow by using a guiding device), 5:28–49 (discussing the operation of embodiments that use a guiding device or additional fans).

Patent Owner relies on a presumption of nexus, which "applies for objective indicia when the patentee shows that the asserted objective evidence is tied to a specific product and that product 'embodies the claimed features, and is coextensive with them.'" *Polaris Indus., Inc. v. Arctic Cat, Inc.*, 882 F.3d 1056, 1072 (Fed. Cir. 2018) (quoting *Brown & Williamson Tobacco Corp. v. Philip Morris Inc.*, 229 F.3d 1120, 1130 (Fed. Cir. 2000)); PO Resp. 48–54. Patent Owner, however, relies only on broad-brush assertions that MRI's and Samsung's products embody and are coextensive with claim 12. *See id.* Our reviewing court has rejected such "attempt[s] to reduce the coextensiveness requirement to an inquiry into whether the patent claims broadly cover the product that is the subject of the evidence of secondary considerations." *Fox Factory*, 944 F.3d at 1377.

---

[10] In the Sur-reply, Patent Owner used "*id.*" to identify the source of this citation. The citation immediately prior, however, is to Petitioner's Reply at pages 21–22 and 24–26. PO Resp. 24. Because Patent Owner is discussing "features or benefits of the '287 Patent's invention," we understand the Patent Owner intended to cite to the '287 patent, Ex. 1001.

Moreover, Patent Owner does not put forth evidence or analysis showing that claimed features of Samsung's products, rather than unclaimed features, led to Samsung's and MRI's commercial success. *See Ormco*, 463 F.3d at 1312 ("[I]f the commercial success is due to an unclaimed feature of the device, the commercial success is irrelevant."). On the other hand, Petitioner put forth at least some evidence of unclaimed features that Samsung touted to one potential customer and in a brochure. *See, e.g.*, Ex. 1046, 2–4; Ex. 2038, 7. Thus, Petitioner's evidence suggests the sort of unclaimed features that may have driven some of the commercial success cited by Patent Owner. Nevertheless, in the absence of sufficient record evidence of coextensiveness, we cannot rule in or out any particular factor as driving commercial success.

We note that Patent Owner also argues that, "even if there were no presumption, the record evidence confirms the nexus between the secondary considerations and the unique characteristics of the claimed inventions." PO Resp. 53–54 (citing *Volvo Penta*, 81 F.4th at 1210). Specifically, Patent Owner argues:

> Without the claimed cooling systems practiced by the parties' products, those products could not function properly in outdoor environments, in full sun, without failing. This is shown by Samsung's own technical marketing documentation, which focuses heavily on the thermal management systems—the very features that distinguish its products from ordinary LCD displays—demonstrating the connection between MRI's thermal management innovations and the objective evidence presented below. Ex. 2038, 7–27. It is the thermal management systems that provide the cooling necessary for the outdoor display market to exist, and the evidence of secondary considerations below relating to the outdoor LCD display market is thus attributable to

> the cooling systems of those products, but for which the market would not exist.

*Id*. at 54. These assertions are too general to be meaningful in directly establishing nexus between the alleged commercial success to the claimed invention. Patent Owner simply assumes that the alleged commercial success is the direct result of "the unique characteristics of the claimed invention." But that is what Patent Owner has to prove, where nexus cannot be presumed. *Fox Factory*, 944 F.3d at 1371–74.

Further, we disagree with Patent Owner's statement that its increased sales shortly after the claimed priority date of the '287 patent is confirmation that commercial success is tied to the "novel aspects" of the '287 patent. PO Resp. 60. The alleged tie is mere speculation not proven by evidence.

Based on all of these considerations, we find that the evidence of record does not support coextensiveness between the challenged claims and any of Samsung's or MRI's commercially successful products. Thus, Patent Owner is not entitled to a presumption of nexus. And because Patent Owner has not otherwise directly shown nexus, we accord Patent Owner's evidence of commercial success little to no weight.

*5. Industry Praise*

As evidence of industry praise for the '287 patent, Patent Owner cites an email from Samsung employee Romulus Stoian to Mr. Dunn, the inventor of the '287 patent, in which Mr. Stoian called what Mr. Dunn had done at MRI "impressive and unique." PO Resp. 64 (citing Ex. 2001). Patent Owner also cites Mr. Stoian's statement that MRI had entered "a virgin space." *Id*. Patent Owner further cites testimony in the ITC from John Palmer, "a Samsung customer and integrator of the Samsung OH displays

for end users," who "testified that Samsung's products were requested by customers (and believed by Palmer to be superior) because of their built-in cooling systems." *Id*. at 66 (citing Ex. 2032, 118:6–119:8). Patent Owner also asserts:

> In its 2015 white paper, Samsung observed that "[t]he many barriers that limited how digital screens could be used outdoors and in direct sunlight have all come down." "Many early adopters" saw failures "because the components and engineering . . . weren't up to the task of working in heat and blazing sun." But Samsung observed that "years of insights and experience" and "engineering advances" made putting screens in the elements "entirely possible."

PO Resp. 63–64 (citing Ex. 2025, 2) (internal citations omitted, alterations in original). Patent Owner argues that Samsung's white paper shows "the need, importance, and enormous challenge to provide effective cooling." PO Sur-reply 25–26 (citing Ex. 2025).

Petitioner calls Mr. Stoain's email "generic" and argues that it "does not identify any technical features of MRI's products, let alone a product that embodies, and is coextensive with, the elements of the Challenged Claims." Pet. Reply 26. Petitioner argues that Samsung's white paper "likewise fails to praise, or even mention, MRI." *Id*. (citing Ex. 2025). Petitioner also argues that Patent Owner mischaracterizes Mr. Palmer's testimony, "which 'does not indicate whether it is the patented features of the cooling system, as opposed to other aspects of the liquid crystal display, that creates the desirable effect." *Id*. (citing Ex. 1042, 298).

We agree with Petitioner that Patent Owner has not established a nexus between its proffered evidence of industry praise and the challenged claims. For example, while Mr. Stoian's email is certainly laudatory of

Mr. Dunn and MRI, the passages cited by Patent Owner are tied to MRI's "*new business model* based on turnkey solutions for DOOH [Digital Out-Of-Home displays]." Ex. 2001 (emphasis added). Further, the email does not mention any features of the challenged claims. *See id.* And nothing in the record ties Mr. Stoian's (and by extension, Samsung's) laudatory statements to the challenged claims. Similarly, Mr. Palmer praised Samsung's displays, and insinuated that Samsung displays function well in hot and cold conditions, but none of his ITC testimony is tied to any particular feature of the challenged claims. *See* Ex. 2032, 118:6–119:8. And, as Petitioner notes, Samsung's white paper does not even mention MRI, let alone praise MRI's products in any way. Pet. Reply 26 (citing Ex. 2025). In the absence of any nexus evidence tying the asserted industry praise to the challenged claims, we accord Patent Owner's proffered evidence of praise little to no weight.

*6. Licensing*

Patent Owner argues that third parties have "recognized MRI's innovations by licensing the '287 Patent and paying royalties for use of the claimed inventions." PO Resp. 65. In particular, Patent Owner cites licensing and joint venture agreements between MRI and "Samsung's primary competitor LG." *Id.* at 65–66 (citing Exs. 2049, 2050). Patent Owner also cites other licenses with Megatech and [redacted]. *Id.* (citing Exs. 2051, 2052).

Petitioner argues that Patent Owner does not attempt to establish a nexus between the licensing activity and the '287 patent. Pet. Reply 27. According to Petitioner, "MRI's licenses either [redacted] or additionally list numerous other intellectual property

rights." *Id*. (citing Exs. 2049, 2051, 2052; *Shoes by Firebug LLC v. Stride Rite Children's Grp., LLC*, 962 F.3d 1362, 1372–73 (Fed. Cir. 2020)).

Of the agreements cited by Patent Owner, the , *See* Ex. 2052, 1–3. The Megatech license *See* Ex. 2051, 10 ( ); Ex. 1001, code (60). MRI's license and joint venture agreements with LG appears to be . *See, e.g.*, Ex. 2049, 1–2 ( Because the agreements encompass intellectual property rights beyond the '287 patent, the agreements on their face do not establish a nexus to the challenged claims. *See Shoes by Firebug*, 962 F.3d at 1372.

Patent Owner puts forth no other evidence to support a finding of nexus. In the absence of such nexus evidence, we accord Patent Owner's evidence of licensing little or no weight.

*J. Conclusion: Obviousness*

Based upon our consideration of the entire record, and for the reasons set forth above, we determine that Petitioner shows by a preponderance of the evidence that (1) Karppanen teaches all of the limitations of claims 12–23, and (2) the combination of Ohta and Marumoto teaches all of the

limitations of claims 1, 4, 5, 8, 10–14, 16, 17, and 21–23, and Petitioner puts forth a persuasive rationale for combining Ohta with Marumoto. We also determine that Petitioner's evidence of unpatentability outweighs the objective indicia of nonobviousness provided by Patent Owner. Accordingly, we determine that Petitioner establishes by a preponderance of the evidence that claims 1, 4, 5, 8, and 10–23 of the '287 patent would have been obvious.

In addition, for the reasons set forth above, we determine that Petitioner does not show that the combination of Ohta and Marumoto, and the combination of Ohta, Marumoto, and Yare, teaches all of the limitations of claim 9. Therefore, we determine that Petitioner does not establish by a preponderance of the evidence claim 9 would have been obvious.

## III. CONCLUSION[11]

After reviewing the record and weighing the evidence offered by both parties, we determine that Petitioner shows, by a preponderance of the evidence, that claims 1, 4, 5, 8, and 10–23 of the '287 patent are unpatentable, and does not show by a preponderance of the evidence that claim 9 would have been unpatentable.

---

[11] Should Patent Owner wish to pursue amendment of the challenged claims in a reissue or reexamination proceeding subsequent to the issuance of this decision, we draw Patent Owner's attention to the April 2019 *Notice Regarding Options for Amendments by Patent Owner Through Reissue or Reexamination During a Pending AIA Trial Proceeding*. *See* 84 Fed. Reg. 16,654 (Apr. 22, 2019). If Patent Owner chooses to file a reissue application or a request for reexamination of the challenged patent, we remind Patent Owner of its continuing obligation to notify the Board of any such related matters in updated mandatory notices. *See* 37 C.F.R. § 42.8(a)(3), (b)(2).

In summary:

| Claims | 35 U.S.C. § | Reference(s)/Basis | Claims Shown Unpatentable | Claims Not shown Unpatentable |
|---|---|---|---|---|
| 12–23 | 103 | Karppanen | 12–23 | |
| 1, 4, 5, 8–12, 14–17, 21–23 | 103 | Nagashima, Karppanen | | 1, 4, 5, 8–12, 14–17, 21–23 |
| 1, 4, 5, 8–23 | 103 | Ohta, Marumoto | 1, 4, 5, 8, 10–14, 16, 17, 21–23 | 9, 15, 18–20 |
| 1, 4, 5, 8–23 | 103 | Ohta, Marumoto, Yare[12] | | 9 |
| 12–20 | 103 | Kitamura, Harris[13] | | |
| **Overall Outcome** | | | 1, 4, 5, 8, 10–23 | 9 |

## IV. ORDER

In consideration of the foregoing, it is hereby:

ORDERED that Petitioner has established by a preponderance of the evidence that claims 1, 4, 5, 8, and 10–23 are unpatentable;

FURTHER ORDERED that Petitioner has not established by a preponderance of the evidence that claim 9 is unpatentable; and

FURTHER ORDERED that, because this is a Final Written Decision, parties to the proceeding seeking judicial review of the Decision must comply with the notice and service requirements of 37 C.F.R. § 90.2.

---

[12] We do not reach this ground with respect to claims 1, 4, 5, 8, and 10–23 for the reasons set forth in Section II.F, *supra*.

[13] We do not reach this ground for the reasons set forth in Section II.G, *supra*.

FOR PETITIONER:

Sanjeet Dutta
Douglas J. Kline
Srinkath Reddy
Naomi Birbach
Christine Potkay
GOODWIN PROCTOR LLP
sdutta@goodwinlaw.com
dkline@goodwinlaw.com
sreddy@goodwinlaw.com
nbirbach@goodwinlaw.com
cpotkay@goodwinlaw.com

FOR PATENT OWNER:

John C. Alemanni
Carl Sanders
Michael T. Morlock
Courtney Dabbiere
David A. Reed
Andrea A. Anderson
KILPATRICK TOWNSEND & STOCKTON LLP
jalemanni@kilpatricktownsend.com
csanders@kilpatricktownsend.com
mmorlock@klilpatricktownsend.com
cdabbiere@kilpatricktownsend.com
dreed@klptricktownsend.com
anderson@ktslaw.com

## CERTIFICATE OF SERVICE

Pursuant to 37 C.F.R. §§ 42.6(e) the undersigned hereby certifies that on July 30, 2024 **"PARTIES' JOINT PROPOSED REDACTIONS TO FINAL WRITTEN DECISION"** were served upon lead counsel for Patent Owner, pursuant to Patent Owner's agreement to accept such service by email as set forth in Patent Owner's Mandatory Notices.

John C. Alemanni – jalemanni@kilpatricktownsend.com

Carl Sanders – csanders@kilpatricktownsend.com

Michael T. Morlock – mmorlock@kilpatricktownsend.com

Courtney Dabbiere – cdabbiere@kilpatricktownsend.com

David A. Reed – dreed@kilpatricktownsend.com

Andrea A. Anderson – andie.anderson@ktslaw.com

Dated: July 30, 2024

/*Sanjeet K. Dutta*/

Sanjeet K. Dutta (Reg. No. 46,145)
GOODWIN PROCTER LLP
601 Marshall Street
Redwood City, California 94063
Email: sdutta@goodwinlaw.com
Tel.: +1 (650) 752-3100
Fax: +1 (650) 853-1038

*Lead Counsel for Petitioner*