UNITED STATES PATENT AND TRADEMARK OFFICE

UNITED STATES DEPARTMENT OF COMMERCE
United States Patent and Trademark Office
Address: COMMISSIONER FOR PATENTS
P.O. Box 1450
Alexandria, Virginia 22313-1450
www.uspto.gov

APPLICATION NO.	ISSUE DATE	PATENT NO.	ATTORNEY DOCKET NO.	CONFIRMATION NO.
14/275,136	08/25/2015	9117341	COB-13-1044CIP3-CON	9997

35811 7590 08/05/2015
IP GROUP OF DLA PIPER LLP (US)
ONE LIBERTY PLACE
1650 MARKET ST, SUITE 4900
PHILADELPHIA, PA 19103

ISSUE NOTIFICATION

The projected patent number and issue date are specified above.

Determination of Patent Term Adjustment under 35 U.S.C. 154 (b)
(application filed on or after May 29, 2000)

The Patent Term Adjustment is 0 day(s). Any patent to issue from the above-identified application will include an indication of the adjustment on the front page.

If a Continued Prosecution Application (CPA) was filed in the above-identified application, the filing date that determines Patent Term Adjustment is the filing date of the most recent CPA.

Applicant will be able to obtain more detailed information by accessing the Patent Application Information Retrieval (PAIR) WEB site (http://pair.uspto.gov).

Any questions regarding the Patent Term Extension or Adjustment determination should be directed to the Office of Patent Legal Administration at (571)-272-7702. Questions relating to issue and publication fee payments should be directed to the Application Assistance Unit (AAU) of the Office of Data Management (ODM) at (571)-272-4200.

APPLICANT(s) (Please see PAIR WEB site http://pair.uspto.gov for additional applicants):

Bernard J. Marantelli, London, UNITED KINGDOM;
Diogenes Limited, Douglas, ISLE OF MAN;

The United States represents the largest, most dynamic marketplace in the world and is an unparalleled location for business investment, innovation, and commercialization of new technologies. The USA offers tremendous resources and advantages for those who invest and manufacture goods here. Through SelectUSA, our nation works to encourage and facilitate business investment. To learn more about why the USA is the best country in the world to develop technology, manufacture products, and grow your business, visit SelectUSA.gov.

PART B - FEE(S) TRANSMITTAL

Complete and send this form, together with applicable fee(s), to: Mail **Mail Stop ISSUE FEE**
Commissioner for Patents
P.O. Box 1450
Alexandria, Virginia 22313-1450
or Fax (571)-273-2885

INSTRUCTIONS: This form should be used for transmitting the ISSUE FEE and PUBLICATION FEE (if required). Blocks 1 through 5 should be completed where appropriate. All further correspondence including the Patent, advance orders and notification of maintenance fees will be mailed to the current correspondence address as indicated unless corrected below or directed otherwise in Block 1, by (a) specifying a new correspondence address; and/or (b) indicating a separate "FEE ADDRESS" for maintenance fee notifications.

CURRENT CORRESPONDENCE ADDRESS (Note: Use Block 1 for any change of address)

35811 7590 07/01/2015
IP GROUP OF DLA PIPER LLP (US)
ONE LIBERTY PLACE
1650 MARKET ST, SUITE 4900
PHILADELPHIA, PA 19103

Note: A certificate of mailing can only be used for domestic mailings of the Fee(s) Transmittal. This certificate cannot be used for any other accompanying papers. Each additional paper, such as an assignment or formal drawing, must have its own certificate of mailing or transmission.

Certificate of Mailing or Transmission
I hereby certify that this Fee(s) Transmittal is being deposited with the United States Postal Service with sufficient postage for first class mail in an envelope addressed to the Mail Stop ISSUE FEE address above, or being facsimile transmitted to the USPTO (571) 273-2885, on the date indicated below.

(Depositor's name)
(Signature)
(Date)

APPLICATION NO.	FILING DATE	FIRST NAMED INVENTOR	ATTORNEY DOCKET NO.	CONFIRMATION NO.
14/275,136	05/12/2014	Bernard J. Marantelli	COB-13-1044CIP3-CON	9997

TITLE OF INVENTION: WAGERING APPARATUS, METHODS AND SYSTEMS

APPLN. TYPE	ENTITY STATUS	ISSUE FEE DUE	PUBLICATION FEE DUE	PREV. PAID ISSUE FEE	TOTAL FEE(S) DUE	DATE DUE
nonprovisional	SMALL	$480	$0	$0	$480	10/01/2015

EXAMINER	ART UNIT	CLASS-SUBCLASS
TORIMIRO, ADETOKUNBO OLUSEGUN	3714	463-028000

1. Change of correspondence address or indication of "Fee Address" (37 CFR 1.363).
- ☐ Change of correspondence address (or Change of Correspondence Address form PTO/SB/122) attached.
- ☐ "Fee Address" indication (or "Fee Address" Indication form PTO/SB/47; Rev 03-02 or more recent) attached. **Use of a Customer Number is required.**

2. For printing on the patent front page, list
(1) The names of up to 3 registered patent attorneys or agents OR, alternatively,
(2) The name of a single firm (having as a member a registered attorney or agent) and the names of up to 2 registered patent attorneys or agents. If no name is listed, no name will be printed.

1 DLA Piper LLP (US)
2
3

3. ASSIGNEE NAME AND RESIDENCE DATA TO BE PRINTED ON THE PATENT (print or type)

PLEASE NOTE: Unless an assignee is identified below, no assignee data will appear on the patent. If an assignee is identified below, the document has been filed for recordation as set forth in 37 CFR 3.11. Completion of this form is NOT a substitute for filing an assignment.

(A) NAME OF ASSIGNEE: Diogenes Limited

(B) RESIDENCE: (CITY and STATE OR COUNTRY): Isle of Man

Please check the appropriate assignee category or categories (will not be printed on the patent): ☐ Individual ☒ Corporation or other private group entity ☐ Government

4a. The following fee(s) are submitted:
- ☒ Issue Fee
- ☐ Publication Fee (No small entity discount permitted)
- ☐ Advance Order - # of Copies _____

4b. Payment of Fee(s): **(Please first reapply any previously paid issue fee shown above)**
- ☐ A check is enclosed.
- ☐ Payment by credit card. Form PTO-2038 is attached.
- ☒ The director is hereby authorized to charge the required fee(s), any deficiency, or credits any overpayment, to Deposit Account Number 50-2719 (enclose an extra copy of this form).

5. **Change in Entity Status** (from status indicated above)
- ☐ Applicant certifying micro entity status. See 37 CFR 1.29 — NOTE: Absent a valid certification of Micro Entity Status (see forms PTO/SB/15A and 15B), issue fee payment in the micro entity amount will not be accepted at the risk of application abandonment.
- ☐ Applicant asserting small entity status. See 37 CFR 1.27 — NOTE: If the application was previously under micro entity status, checking this box will be taken to be a notification of loss of entitlement to micro entity status.
- ☐ Applicant changing to regular undiscounted fee status. — NOTE: Checking this box will be taken to be a notification of loss of entitlement to small or micro entity status, as applicable.

NOTE: This form must be signed in accordance with 37 CFR 1.31 and 1.33. See 37 CFR 1.4 for signature requirements and certifications.

Authorized Signature _____ Date July 21, 2015

Typed or printed name Paul A. Taufer Registration No. 35,703

DraftKings, Ex. 1002, p. 2

IN THE UNITED STATES PATENT AND TRADEMARK OFFICE

Art Unit	: 3714	**Customer No. 035811**
Examiner	: Adetokunbo Olusegun Torimiro	
Serial No.	: 14/275,136	Docket No.: COB-13-1044CIP3-CON
Filed	: May 12, 2014	
Inventor(s)	: Bernard J. Marantelli	Confirmation No.: 9997
Title	: WAGERING APPARATUS,	Not. Of Allow.: 07/01/15
	: METHODS AND SYSTEMS	Dated: July 21, 2015

TRANSMITTAL LETTER

Commissioner for Patents
P.O. Box 1450
Alexandria, VA 22313-1450

Sir:

Applicant submits herewith Form PTOL-85B.

The Commissioner is authorized to charge the $480.00 fee to Deposit Account No. 50-2719 to cover the fee for payment of the issue fee.

The Commissioner is also authorized to charge any additional fees to Deposit Account No. 50-2719.

Respectfully submitted,

Paul A. Taufer
Reg. No. 35,703

PAT/cc
(215)656-3385

EAST\41448985.1

Electronic Patent Application Fee Transmittal

Application Number:	14275136
Filing Date:	12-May-2014
Title of Invention:	WAGERING APPARATUS, METHODS AND SYSTEMS
First Named Inventor/Applicant Name:	Bernard J. Marantelli
Filer:	Thomas Daniel Christenbury/Carol Coney
Attorney Docket Number:	COB-13-1044CIP3-CON

Filed as Small Entity

Filing Fees for Utility under 35 USC 111(a)

Description	Fee Code	Quantity	Amount	Sub-Total in USD($)
Basic Filing:				
Pages:				
Claims:				
Miscellaneous-Filing:				
Petition:				
Patent-Appeals-and-Interference:				
Post-Allowance-and-Post-Issuance:				
Utility Appl Issue Fee	2501	1	480	480

Description	Fee Code	Quantity	Amount	Sub-Total in USD($)
Extension-of-Time:				
Miscellaneous:				
			Total in USD ($)	**480**

Electronic Acknowledgement Receipt	
EFS ID:	22975533
Application Number:	14275136
International Application Number:	
Confirmation Number:	9997
Title of Invention:	WAGERING APPARATUS, METHODS AND SYSTEMS
First Named Inventor/Applicant Name:	Bernard J. Marantelli
Customer Number:	35811
Filer:	Thomas Daniel Christenbury/Carol Coney
Filer Authorized By:	Thomas Daniel Christenbury
Attorney Docket Number:	COB-13-1044CIP3-CON
Receipt Date:	21-JUL-2015
Filing Date:	12-MAY-2014
Time Stamp:	14:52:22
Application Type:	Utility under 35 USC 111(a)

Payment information:

Submitted with Payment	yes
Payment Type	Deposit Account
Payment was successfully received in RAM	$480
RAM confirmation Number	1296
Deposit Account	502719
Authorized User	CHRISTENBURY, T DANIEL
The Director of the USPTO is hereby authorized to charge indicated fees and credit any overpayment as follows:	
Charge any Additional Fees required under 37 C.F.R. Section 1.16 (National application filing, search, and examination fees)	
Charge any Additional Fees required under 37 C.F.R. Section 1.17 (Patent application and reexamination processing fees)	

Charge any Additional Fees required under 37 C.F.R. Section 1.19 (Document supply fees)

Charge any Additional Fees required under 37 C.F.R. Section 1.20 (Post Issuance fees)

Charge any Additional Fees required under 37 C.F.R. Section 1.21 (Miscellaneous fees and charges)

File Listing:

Document Number	Document Description	File Name	File Size(Bytes)/ Message Digest	Multi Part /.zip	Pages (if appl.)
1	Issue Fee Payment (PTO-85B)	FormPTOL85.pdf	149522 4d7cf4de6c0bebe5bc406607d0b8b4b9f203ecd2	no	1
Warnings:					
Information:					
2	Transmittal Letter	transmittalletter.pdf	58598 53b1c5c5782bb33ba1ab21ce8def5dd8ff486d81	no	1
Warnings:					
Information:					
3	Fee Worksheet (SB06)	fee-info.pdf	30654 24797eaa04d884ab27c80b9a94b0280a4016ab2f	no	2
Warnings:					
Information:					
			Total Files Size (in bytes):	238774	

This Acknowledgement Receipt evidences receipt on the noted date by the USPTO of the indicated documents, characterized by the applicant, and including page counts, where applicable. It serves as evidence of receipt similar to a Post Card, as described in MPEP 503.

<u>New Applications Under 35 U.S.C. 111</u>
If a new application is being filed and the application includes the necessary components for a filing date (see 37 CFR 1.53(b)-(d) and MPEP 506), a Filing Receipt (37 CFR 1.54) will be issued in due course and the date shown on this Acknowledgement Receipt will establish the filing date of the application.

<u>National Stage of an International Application under 35 U.S.C. 371</u>
If a timely submission to enter the national stage of an international application is compliant with the conditions of 35 U.S.C. 371 and other applicable requirements a Form PCT/DO/EO/903 indicating acceptance of the application as a national stage submission under 35 U.S.C. 371 will be issued in addition to the Filing Receipt, in due course.

<u>New International Application Filed with the USPTO as a Receiving Office</u>
If a new international application is being filed and the international application includes the necessary components for an international filing date (see PCT Article 11 and MPEP 1810), a Notification of the International Application Number and of the International Filing Date (Form PCT/RO/105) will be issued in due course, subject to prescriptions concerning national security, and the date shown on this Acknowledgement Receipt will establish the international filing date of the application.

UNITED STATES PATENT AND TRADEMARK OFFICE

UNITED STATES DEPARTMENT OF COMMERCE
United States Patent and Trademark Office
Address: COMMISSIONER FOR PATENTS
P.O. Box 1450
Alexandria, Virginia 22313-1450
www.uspto.gov

NOTICE OF ALLOWANCE AND FEE(S) DUE

35811 7590 07/01/2015
IP GROUP OF DLA PIPER LLP (US)
ONE LIBERTY PLACE
1650 MARKET ST, SUITE 4900
PHILADELPHIA, PA 19103

EXAMINER
TORIMIRO, ADETOKUNBO OLUSEGUN

ART UNIT	PAPER NUMBER
3714	

DATE MAILED: 07/01/2015

APPLICATION NO.	FILING DATE	FIRST NAMED INVENTOR	ATTORNEY DOCKET NO.	CONFIRMATION NO.
14/275,136	05/12/2014	Bernard J. Marantelli	COB-13-1044CIP3-CON	9997

TITLE OF INVENTION: WAGERING APPARATUS, METHODS AND SYSTEMS

APPLN. TYPE	ENTITY STATUS	ISSUE FEE DUE	PUBLICATION FEE DUE	PREV. PAID ISSUE FEE	TOTAL FEE(S) DUE	DATE DUE
nonprovisional	SMALL	$480	$0	$0	$480	10/01/2015

THE APPLICATION IDENTIFIED ABOVE HAS BEEN EXAMINED AND IS ALLOWED FOR ISSUANCE AS A PATENT. PROSECUTION ON THE MERITS IS CLOSED. THIS NOTICE OF ALLOWANCE IS NOT A GRANT OF PATENT RIGHTS. THIS APPLICATION IS SUBJECT TO WITHDRAWAL FROM ISSUE AT THE INITIATIVE OF THE OFFICE OR UPON PETITION BY THE APPLICANT. SEE 37 CFR 1.313 AND MPEP 1308.

THE ISSUE FEE AND PUBLICATION FEE (IF REQUIRED) MUST BE PAID WITHIN THREE MONTHS FROM THE MAILING DATE OF THIS NOTICE OR THIS APPLICATION SHALL BE REGARDED AS ABANDONED. THIS STATUTORY PERIOD CANNOT BE EXTENDED. SEE 35 U.S.C. 151. THE ISSUE FEE DUE INDICATED ABOVE DOES NOT REFLECT A CREDIT FOR ANY PREVIOUSLY PAID ISSUE FEE IN THIS APPLICATION. IF AN ISSUE FEE HAS PREVIOUSLY BEEN PAID IN THIS APPLICATION (AS SHOWN ABOVE), THE RETURN OF PART B OF THIS FORM WILL BE CONSIDERED A REQUEST TO REAPPLY THE PREVIOUSLY PAID ISSUE FEE TOWARD THE ISSUE FEE NOW DUE.

HOW TO REPLY TO THIS NOTICE:

I. Review the ENTITY STATUS shown above. If the ENTITY STATUS is shown as SMALL or MICRO, verify whether entitlement to that entity status still applies.

If the ENTITY STATUS is the same as shown above, pay the TOTAL FEE(S) DUE shown above.

If the ENTITY STATUS is changed from that shown above, on PART B - FEE(S) TRANSMITTAL, complete section number 5 titled "Change in Entity Status (from status indicated above)".

For purposes of this notice, small entity fees are 1/2 the amount of undiscounted fees, and micro entity fees are 1/2 the amount of small entity fees.

II. PART B - FEE(S) TRANSMITTAL, or its equivalent, must be completed and returned to the United States Patent and Trademark Office (USPTO) with your ISSUE FEE and PUBLICATION FEE (if required). If you are charging the fee(s) to your deposit account, section "4b" of Part B - Fee(s) Transmittal should be completed and an extra copy of the form should be submitted. If an equivalent of Part B is filed, a request to reapply a previously paid issue fee must be clearly made, and delays in processing may occur due to the difficulty in recognizing the paper as an equivalent of Part B.

III. All communications regarding this application must give the application number. Please direct all communications prior to issuance to Mail Stop ISSUE FEE unless advised to the contrary.

IMPORTANT REMINDER: Utility patents issuing on applications filed on or after Dec. 12, 1980 may require payment of maintenance fees. It is patentee's responsibility to ensure timely payment of maintenance fees when due.

PTOL-85 (Rev. 02/11)

DraftKings, Ex. 1002, p. 8

PART B - FEE(S) TRANSMITTAL

Complete and send this form, together with applicable fee(s), to: Mail **Mail Stop ISSUE FEE**
Commissioner for Patents
P.O. Box 1450
Alexandria, Virginia 22313-1450
or Fax (571)-273-2885

INSTRUCTIONS: This form should be used for transmitting the ISSUE FEE and PUBLICATION FEE (if required). Blocks 1 through 5 should be completed where appropriate. All further correspondence including the Patent, advance orders and notification of maintenance fees will be mailed to the current correspondence address as indicated unless corrected below or directed otherwise in Block 1, by (a) specifying a new correspondence address; and/or (b) indicating a separate "FEE ADDRESS" for maintenance fee notifications.

CURRENT CORRESPONDENCE ADDRESS (Note: Use Block 1 for any change of address)

35811 7590 07/01/2015
IP GROUP OF DLA PIPER LLP (US)
ONE LIBERTY PLACE
1650 MARKET ST, SUITE 4900
PHILADELPHIA, PA 19103

Note: A certificate of mailing can only be used for domestic mailings of the Fee(s) Transmittal. This certificate cannot be used for any other accompanying papers. Each additional paper, such as an assignment or formal drawing, must have its own certificate of mailing or transmission.

Certificate of Mailing or Transmission
I hereby certify that this Fee(s) Transmittal is being deposited with the United States Postal Service with sufficient postage for first class mail in an envelope addressed to the Mail Stop ISSUE FEE address above, or being facsimile transmitted to the USPTO (571) 273-2885, on the date indicated below.

(Depositor's name)
(Signature)
(Date)

APPLICATION NO.	FILING DATE	FIRST NAMED INVENTOR	ATTORNEY DOCKET NO.	CONFIRMATION NO.
14/275,136	05/12/2014	Bernard J. Marantelli	COB-13-1044CIP3-CON	9997

TITLE OF INVENTION: WAGERING APPARATUS, METHODS AND SYSTEMS

APPLN. TYPE	ENTITY STATUS	ISSUE FEE DUE	PUBLICATION FEE DUE	PREV. PAID ISSUE FEE	TOTAL FEE(S) DUE	DATE DUE
nonprovisional	SMALL	$480	$0	$0	$480	10/01/2015

EXAMINER	ART UNIT	CLASS-SUBCLASS
TORIMIRO, ADETOKUNBO OLUSEGUN	3714	463-028000

1. Change of correspondence address or indication of "Fee Address" (37 CFR 1.363).
- ❑ Change of correspondence address (or Change of Correspondence Address form PTO/SB/122) attached.
- ❑ "Fee Address" indication (or "Fee Address" Indication form PTO/SB/47; Rev 03-02 or more recent) attached. **Use of a Customer Number is required.**

2. For printing on the patent front page, list
(1) The names of up to 3 registered patent attorneys or agents OR, alternatively,
(2) The name of a single firm (having as a member a registered attorney or agent) and the names of up to 2 registered patent attorneys or agents. If no name is listed, no name will be printed.

1_____
2_____
3_____

3. ASSIGNEE NAME AND RESIDENCE DATA TO BE PRINTED ON THE PATENT (print or type)

PLEASE NOTE: Unless an assignee is identified below, no assignee data will appear on the patent. If an assignee is identified below, the document has been filed for recordation as set forth in 37 CFR 3.11. Completion of this form is NOT a substitute for filing an assignment.

(A) NAME OF ASSIGNEE (B) RESIDENCE: (CITY and STATE OR COUNTRY)

Please check the appropriate assignee category or categories (will not be printed on the patent) : ❑ Individual ❑ Corporation or other private group entity ❑ Government

4a. The following fee(s) are submitted:
- ❑ Issue Fee
- ❑ Publication Fee (No small entity discount permitted)
- ❑ Advance Order - # of Copies _____

4b. Payment of Fee(s): (**Please first reapply any previously paid issue fee shown above**)
- ❑ A check is enclosed.
- ❑ Payment by credit card. Form PTO-2038 is attached.
- ❑ The director is hereby authorized to charge the required fee(s), any deficiency, or credits any overpayment, to Deposit Account Number _____ (enclose an extra copy of this form).

5. **Change in Entity Status** (from status indicated above)
- ❑ Applicant certifying micro entity status. See 37 CFR 1.29 — NOTE: Absent a valid certification of Micro Entity Status (see forms PTO/SB/15A and 15B), issue fee payment in the micro entity amount will not be accepted at the risk of application abandonment.
- ❑ Applicant asserting small entity status. See 37 CFR 1.27 — NOTE: If the application was previously under micro entity status, checking this box will be taken to be a notification of loss of entitlement to micro entity status.
- ❑ Applicant changing to regular undiscounted fee status. — NOTE: Checking this box will be taken to be a notification of loss of entitlement to small or micro entity status, as applicable.

NOTE: This form must be signed in accordance with 37 CFR 1.31 and 1.33. See 37 CFR 1.4 for signature requirements and certifications.

Authorized Signature _____ Date _____

Typed or printed name _____ Registration No. _____

PTOL-85 Part B (10-13) Approved for use through 10/31/2013. OMB 0651-0033 U.S. Patent and Trademark Office; U.S. DEPARTMENT OF COMMERCE

DraftKings, Ex. 1002, p. 9

UNITED STATES PATENT AND TRADEMARK OFFICE

UNITED STATES DEPARTMENT OF COMMERCE
United States Patent and Trademark Office
Address: COMMISSIONER FOR PATENTS
P.O. Box 1450
Alexandria, Virginia 22313-1450
www.uspto.gov

APPLICATION NO.	FILING DATE	FIRST NAMED INVENTOR	ATTORNEY DOCKET NO.	CONFIRMATION NO.
14/275,136	05/12/2014	Bernard J. Marantelli	COB-13-1044CIP3-CON	9997

35811 7590 07/01/2015
IP GROUP OF DLA PIPER LLP (US)
ONE LIBERTY PLACE
1650 MARKET ST, SUITE 4900
PHILADELPHIA, PA 19103

EXAMINER
TORIMIRO, ADETOKUNBO OLUSEGUN

ART UNIT	PAPER NUMBER
3714	

DATE MAILED: 07/01/2015

Determination of Patent Term Adjustment under 35 U.S.C. 154 (b)
(Applications filed on or after May 29, 2000)

The Office has discontinued providing a Patent Term Adjustment (PTA) calculation with the Notice of Allowance.

Section 1(h)(2) of the AIA Technical Corrections Act amended 35 U.S.C. 154(b)(3)(B)(i) to eliminate the requirement that the Office provide a patent term adjustment determination with the notice of allowance. See Revisions to Patent Term Adjustment, 78 Fed. Reg. 19416, 19417 (Apr. 1, 2013). Therefore, the Office is no longer providing an initial patent term adjustment determination with the notice of allowance. The Office will continue to provide a patent term adjustment determination with the Issue Notification Letter that is mailed to applicant approximately three weeks prior to the issue date of the patent, and will include the patent term adjustment on the patent. Any request for reconsideration of the patent term adjustment determination (or reinstatement of patent term adjustment) should follow the process outlined in 37 CFR 1.705.

Any questions regarding the Patent Term Extension or Adjustment determination should be directed to the Office of Patent Legal Administration at (571)-272-7702. Questions relating to issue and publication fee payments should be directed to the Customer Service Center of the Office of Patent Publication at 1-(888)-786-0101 or (571)-272-4200.

OMB Clearance and PRA Burden Statement for PTOL-85 Part B

The Paperwork Reduction Act (PRA) of 1995 requires Federal agencies to obtain Office of Management and Budget approval before requesting most types of information from the public. When OMB approves an agency request to collect information from the public, OMB (i) provides a valid OMB Control Number and expiration date for the agency to display on the instrument that will be used to collect the information and (ii) requires the agency to inform the public about the OMB Control Number's legal significance in accordance with 5 CFR 1320.5(b).

The information collected by PTOL-85 Part B is required by 37 CFR 1.311. The information is required to obtain or retain a benefit by the public which is to file (and by the USPTO to process) an application. Confidentiality is governed by 35 U.S.C. 122 and 37 CFR 1.14. This collection is estimated to take 12 minutes to complete, including gathering, preparing, and submitting the completed application form to the USPTO. Time will vary depending upon the individual case. Any comments on the amount of time you require to complete this form and/or suggestions for reducing this burden, should be sent to the Chief Information Officer, U.S. Patent and Trademark Office, U.S. Department of Commerce, P.O. Box 1450, Alexandria, Virginia 22313-1450. DO NOT SEND FEES OR COMPLETED FORMS TO THIS ADDRESS. SEND TO: Commissioner for Patents, P.O. Box 1450, Alexandria, Virginia 22313-1450. Under the Paperwork Reduction Act of 1995, no persons are required to respond to a collection of information unless it displays a valid OMB control number.

Privacy Act Statement

The Privacy Act of 1974 (P.L. 93-579) requires that you be given certain information in connection with your submission of the attached form related to a patent application or patent. Accordingly, pursuant to the requirements of the Act, please be advised that: (1) the general authority for the collection of this information is 35 U.S.C. 2(b)(2); (2) furnishing of the information solicited is voluntary; and (3) the principal purpose for which the information is used by the U.S. Patent and Trademark Office is to process and/or examine your submission related to a patent application or patent. If you do not furnish the requested information, the U.S. Patent and Trademark Office may not be able to process and/or examine your submission, which may result in termination of proceedings or abandonment of the application or expiration of the patent.

The information provided by you in this form will be subject to the following routine uses:

1. The information on this form will be treated confidentially to the extent allowed under the Freedom of Information Act (5 U.S.C. 552) and the Privacy Act (5 U.S.C 552a). Records from this system of records may be disclosed to the Department of Justice to determine whether disclosure of these records is required by the Freedom of Information Act.
2. A record from this system of records may be disclosed, as a routine use, in the course of presenting evidence to a court, magistrate, or administrative tribunal, including disclosures to opposing counsel in the course of settlement negotiations.
3. A record in this system of records may be disclosed, as a routine use, to a Member of Congress submitting a request involving an individual, to whom the record pertains, when the individual has requested assistance from the Member with respect to the subject matter of the record.
4. A record in this system of records may be disclosed, as a routine use, to a contractor of the Agency having need for the information in order to perform a contract. Recipients of information shall be required to comply with the requirements of the Privacy Act of 1974, as amended, pursuant to 5 U.S.C. 552a(m).
5. A record related to an International Application filed under the Patent Cooperation Treaty in this system of records may be disclosed, as a routine use, to the International Bureau of the World Intellectual Property Organization, pursuant to the Patent Cooperation Treaty.
6. A record in this system of records may be disclosed, as a routine use, to another federal agency for purposes of National Security review (35 U.S.C. 181) and for review pursuant to the Atomic Energy Act (42 U.S.C. 218(c)).
7. A record from this system of records may be disclosed, as a routine use, to the Administrator, General Services, or his/her designee, during an inspection of records conducted by GSA as part of that agency's responsibility to recommend improvements in records management practices and programs, under authority of 44 U.S.C. 2904 and 2906. Such disclosure shall be made in accordance with the GSA regulations governing inspection of records for this purpose, and any other relevant (i.e., GSA or Commerce) directive. Such disclosure shall not be used to make determinations about individuals.
8. A record from this system of records may be disclosed, as a routine use, to the public after either publication of the application pursuant to 35 U.S.C. 122(b) or issuance of a patent pursuant to 35 U.S.C. 151. Further, a record may be disclosed, subject to the limitations of 37 CFR 1.14, as a routine use, to the public if the record was filed in an application which became abandoned or in which the proceedings were terminated and which application is referenced by either a published application, an application open to public inspection or an issued patent.
9. A record from this system of records may be disclosed, as a routine use, to a Federal, State, or local law enforcement agency, if the USPTO becomes aware of a violation or potential violation of law or regulation.

Notice of Allowability	Application No. 14/275,136	Applicant(s) MARANTELLI, BERNARD J.	
	Examiner ADETOKUNBO O. TORIMIRO	Art Unit 3714	AIA (First Inventor to File) Status No

-- The MAILING DATE of this communication appears on the cover sheet with the correspondence address--

All claims being allowable, PROSECUTION ON THE MERITS IS (OR REMAINS) CLOSED in this application. If not included herewith (or previously mailed), a Notice of Allowance (PTOL-85) or other appropriate communication will be mailed in due course. **THIS NOTICE OF ALLOWABILITY IS NOT A GRANT OF PATENT RIGHTS.** This application is subject to withdrawal from issue at the initiative of the Office or upon petition by the applicant. See 37 CFR 1.313 and MPEP 1308.

1. ☒ This communication is responsive to *05/27/2015*.
   ☐ A declaration(s)/affidavit(s) under **37 CFR 1.130(b)** was/were filed on_____.
2. ☐ An election was made by the applicant in response to a restriction requirement set forth during the interview on _____; the restriction requirement and election have been incorporated into this action.
3. ☒ The allowed claim(s) is/are *1-40*. As a result of the allowed claim(s), you may be eligible to benefit from the **Patent Prosecution Highway** program at a participating intellectual property office for the corresponding application. For more information, please see http://www.uspto.gov/patents/init_events/pph/index.jsp or send an inquiry to PPHfeedback@uspto.gov .
4. ☐ Acknowledgment is made of a claim for foreign priority under 35 U.S.C. § 119(a)-(d) or (f).

   Certified copies:

   a) ☐ All b) ☐ Some *c) ☐ None of the:
   1. ☐ Certified copies of the priority documents have been received.
   2. ☐ Certified copies of the priority documents have been received in Application No. _____ .
   3. ☐ Copies of the certified copies of the priority documents have been received in this national stage application from the International Bureau (PCT Rule 17.2(a)).

   * Certified copies not received: _____.

Applicant has THREE MONTHS FROM THE "MAILING DATE" of this communication to file a reply complying with the requirements noted below. Failure to timely comply will result in ABANDONMENT of this application.
THIS THREE-MONTH PERIOD IS NOT EXTENDABLE.

5. ☐ CORRECTED DRAWINGS (as "replacement sheets") must be submitted.
   ☐ including changes required by the attached Examiner's Amendment / Comment or in the Office action of Paper No./Mail Date _____.

   Identifying indicia such as the application number (see 37 CFR 1.84(c)) should be written on the drawings in the front (not the back) of each sheet. Replacement sheet(s) should be labeled as such in the header according to 37 CFR 1.121(d).
6. ☐ DEPOSIT OF and/or INFORMATION about the deposit of BIOLOGICAL MATERIAL must be submitted. Note the attached Examiner's comment regarding REQUIREMENT FOR THE DEPOSIT OF BIOLOGICAL MATERIAL.

Attachment(s)

1. ☐ Notice of References Cited (PTO-892)
2. ☒ Information Disclosure Statements (PTO/SB/08), Paper No./Mail Date 03/25/2015 and 05/11/2015
3. ☐ Examiner's Comment Regarding Requirement for Deposit of Biological Material
4. ☐ Interview Summary (PTO-413), Paper No./Mail Date _____ .
5. ☐ Examiner's Amendment/Comment
6. ☒ Examiner's Statement of Reasons for Allowance
7. ☐ Other _____.

/ADETOKUNBO O TORIMIRO/
Examiner, Art Unit 3714

1. The present application is being examined under the pre-AIA first to invent provisions.

2. The Applicant's argument received on 05/27/2015 has been considered.

Allowable Subject Matter

3. The following is an examiner's statement of reasons for allowance:

Regarding claims 1,25,31, and 36: A thorough search of the prior art did not reveal references that individually or collectively disclose, suggest, or render obvious, in combination with the other claimed limitations, initiating at least one of a buy-out offer and partial buy-out offer to any number of the one or more players that are eligible to win, said buy-out offer or partial buy-out offer being initiated at any time before the wagering event has been completed, identifying any acceptances of said at least one of a buy-out offer and partial buy-out offer that have been initiated, completing the wagering event, and determining if any of the players have won.

Further, The Applicant's argument clarifies that the claimed limitation of "providing one or more wagering input devices in communication with a system controller", further the examiner understands that the wagering input device is an additional element that cannot be found on a generic computer for playing a wagering game, and therefore appears to be patent-eligible.

Any comments considered necessary by applicant must be submitted no later than the payment of the issue fee and, to avoid processing delays, should preferably accompany the issue fee. Such submissions should be clearly labeled "Comments on Statement of Reasons for Allowance."

Conclusion

4. Any inquiry concerning this communication or earlier communications from the examiner should be directed to Adetokunbo O. Torimiro whose telephone number is (571) 270-1345. The examiner can normally be reached on Mon-Fri (8am - 4pm).

If attempts to reach the examiner by telephone are unsuccessful, the examiner's supervisor, David Lewis can be reached on (571) 272-7673. The fax phone number for the organization where this application or proceeding is assigned is 571-273-8300.

Information regarding the status of an application may be obtained from the Patent Application Information Retrieval (PAIR) system. Status information for published applications may be obtained from either Private PAIR or Public PAIR. Status information for unpublished applications is available through Private PAIR only. For more information about the PAIR system, see http://pair-direct.uspto.gov. Should you have questions on access to the Private PAIR system, contact the Electronic Business Center (EBC) at 866-217-9197 (toll-free). If you would like assistance from a USPTO Customer Service Representative or access to the automated information system, call 800-786-9199 (IN USA OR CANADA) or 571-272-1000.

/ADETOKUNBO O TORIMIRO/
Primary Examiner, Art Unit 3714

Search Notes	Application/Control No.	Applicant(s)/Patent Under Reexamination
	14275136	MARANTELLI, BERNARD J.
	Examiner	**Art Unit**
	ADETOKUNBO O TORIMIRO	3714

CPC- SEARCHED

Symbol	Date	Examiner
G07F3244,3255 (in combination with text search)	6/26/2015	AT
G07F17/32,3225,3293 (in combination with text search)	6/26/2015	AT
G07F17/323,3262 (in combination with text search)	6/26/2015	AT
A63F9/24, A63F13/00 (in combination with text search)	9/18/2014	AT

CPC COMBINATION SETS - SEARCHED

Symbol	Date	Examiner

US CLASSIFICATION SEARCHED

Class	Subclass	Date	Examiner
463	20,22,25,40,42	6/26/2015	AT

SEARCH NOTES

Search Notes	Date	Examiner
-Inventor Name Search	6/26/2015	AT
-Assignee Search	6/26/2015	AT
-East Text Search	6/26/2015	AT
-Plus Search	6/26/2015	AT
-Backward/Forward Search	6/26/2015	AT

INTERFERENCE SEARCH

US Class/ CPC Symbol	US Subclass / CPC Group	Date	Examiner
463	28	6/26/2015	AT

/ADETOKUNBO O TORIMIRO/ Examiner.Art Unit 3714	

Receipt date: 03/25/2015 14275136 - GAU: 9714

Form PTO-1449 US DEPARTMENT OF COMMERCE PATENT AND TRADEMARK OFFICE	ATTY. DOCKET NO. COB-13-1044CIP3-CON	SERIAL NO. 14/275,136
	APPLICANT Bernard J. Marantelli	
LIST OF PUBLICATIONS CITED BY APPLICANT *(Use several sheets if necessary)*	FILING DATE May 12, 2014	GROUP

US PATENT DOCUMENTS

EXAMINER INITIAL*		DOCUMENT NUMBER	DATE	NAME	CLASS	SUBCLASS	FILING DATE IF APPROPRIATE
	AA						
	AB						
	AC						
	AD						
	AE						
	AF						
	AG						
	AH						
	AI						
	AJ						
	AK						

FOREIGN PATENT DOCUMENTS

		DOCUMENT NUMBER	DATE	COUNTRY	CLASS	SUBCLASS	TRANSLATION YES	TRANSLATION NO
	AL							
	AM							
	AN							
	AO							
	AP							

OTHER PUBLICATIONS (Including Author, Title, Date, Pertinent Pages, Etc.)

	AR	A copy of the International Preliminary Report on Patentability issued on March 10, 2015 in corresponding International Application No. PCT/IB2013/002962. A copy of the International Preliminary Report on Patentability issued on March 10, 2015 in corresponding International Application No. PCT/IB2013/002377.
	AS	
	AT	

EXAMINER	/Adetokunbo Torimiro/	DATE CONSIDERED	06/26/2015

*EXAMINER: Initial if publication considered, whether or not citation is in conformance with MPEP 609; Draw line through citation if not in conformance and not considered. Include copy of this form with next communication to Applicant.

EAST\96911357.1

ALL REFERENCES CONSIDERED EXCEPT WHERE LINED THROUGH. /AT/

Form PTO-1449 US DEPARTMENT OF COMMERCE PATENT AND TRADEMARK OFFICE	ATTY. DOCKET NO. COB-13-1044CIP3-CON	SERIAL NO. 14/275,136
	APPLICANT Bernard J. Marantelli	
LIST OF PUBLICATIONS CITED BY APPLICANT *(Use several sheets if necessary)*	FILING DATE May 12, 2014	GROUP 3714

US PATENT DOCUMENTS

EXAMINER INITIAL*		DOCUMENT NUMBER	DATE	NAME	CLASS	SUBCLASS	FILING DATE IF APPROPRIATE
	AA						
	AB						
	AC						
	AD						
	AE						
	AF						
	AG						
	AH						
	AI						
	AJ						
	AK						

FOREIGN PATENT DOCUMENTS

		DOCUMENT NUMBER	DATE	COUNTRY	CLASS	SUBCLASS	TRANSLATION YES	TRANSLATION NO
	AL							
	AM							
	AN							
	AO							
	AP							

OTHER PUBLICATIONS (Including Author, Title, Date, Pertinent Pages, Etc.)

	AR	A copy of the International Preliminary Report on Patentability issued on March 19, 2015 in corresponding International Application No. PCT/IB2013/002965. A copy of the International Preliminary Report on Patentability issued on March 19, 2015 in corresponding International Application No. PCT/IB2013/003028.
	AS	
	AT	

EXAMINER	/Adetokunbo Torimiro/	DATE CONSIDERED	06/26/2015

*EXAMINER: Initial if publication considered, whether or not citation is in conformance with MPEP 609; Draw line through citation if not in conformance and not considered. Include copy of this form with next communication to Applicant.

EAST\100556226.1

ALL REFERENCES CONSIDERED EXCEPT WHERE LINED THROUGH. /AT/

Index of Claims	Application/Control No.	Applicant(s)/Patent Under Reexamination
	14275136	MARANTELLI, BERNARD J.
	Examiner	**Art Unit**
	ADETOKUNBO O TORIMIRO	3714

✓	Rejected	-	Cancelled	N	Non-Elected	A	Appeal
=	Allowed	÷	Restricted	I	Interference	O	Objected

☐ Claims renumbered in the same order as presented by applicant ☐ CPA ☐ T.D. ☐ R.1.47

CLAIM		DATE								
Final	Original	09/18/2014	03/05/2015	06/26/2015						
	1	✓	✓	=						
	2	✓	✓	=						
	3	✓	✓	=						
	4	✓	✓	=						
	5	✓	✓	=						
	6	✓	✓	=						
	7	✓	✓	=						
	8	✓	✓	=						
	9	✓	✓	=						
	10	✓	✓	=						
	11	✓	✓	=						
	12	✓	✓	=						
	13	✓	✓	=						
	14	✓	✓	=						
	15	✓	✓	=						
	16	✓	✓	=						
	17	✓	✓	=						
	18	✓	✓	=						
	19	✓	✓	=						
	20	✓	✓	=						
	21	✓	✓	=						
	22	✓	✓	=						
	23	✓	✓	=						
	24	✓	✓	=						
	25	✓	✓	=						
	26	✓	✓	=						
	27	✓	✓	=						
	28	✓	✓	=						
	29	✓	✓	=						
	30	✓	✓	=						
	31	✓	✓	=						
	32	✓	✓	=						
	33	✓	✓	=						
	34	✓	✓	=						
	35	✓	✓	=						
	36	✓	✓	=						

Index of Claims	Application/Control No.	Applicant(s)/Patent Under Reexamination
	14275136	MARANTELLI, BERNARD J.
	Examiner	**Art Unit**
	ADETOKUNBO O TORIMIRO	3714

✓	Rejected	-	Cancelled	N	Non-Elected	A	Appeal
=	Allowed	÷	Restricted	I	Interference	O	Objected

☐ Claims renumbered in the same order as presented by applicant ☐ CPA ☐ T.D. ☐ R.1.47

CLAIM		DATE								
Final	Original	09/18/2014	03/05/2015	06/26/2015						
	37	✓	✓	=						
	38	✓	✓	=						
	39	✓	✓	=						
	40	✓	✓	=						

EAST Search History

EAST Search History (Prior Art)

Ref #	Hits	Search Query	DBs	Default Operator	Plurals	Time Stamp
L1	10	marantelli.in.	US-PGPUB; USPAT	SAME	ON	2015/06/26 13:31
L2	8972	wager$3 input device	US-PGPUB; USPAT	SAME	ON	2015/06/26 13:32
L3	12	wager$3 buy adj out	US-PGPUB; USPAT	SAME	ON	2015/06/26 13:32
L4	300	wager$3 buy out	US-PGPUB; USPAT	SAME	ON	2015/06/26 13:32
L5	9	wager$3 partial buy out	US-PGPUB; USPAT	SAME	ON	2015/06/26 13:32
L6	9	wager$3 partial buy adj out	US-PGPUB; USPAT	SAME	ON	2015/06/26 13:33
L7	23	partial buy adj out	US-PGPUB; USPAT	SAME	ON	2015/06/26 13:33
L8	56	buy adj out offer	US-PGPUB; USPAT	SAME	ON	2015/06/26 13:33
L9	29	buy adj out offer and gam$3	US-PGPUB; USPAT	SAME	ON	2015/06/26 13:33
L10	7	(wager$3 event buy out partial acceptance players input device).clm.	US-PGPUB; USPAT	SAME	ON	2015/06/26 13:34
L11	6835	wager$3 input adj device	US-PGPUB; USPAT	SAME	ON	2015/06/26 13:34
L12	13	wager$3 input adj device buy out	US-PGPUB; USPAT	SAME	ON	2015/06/26 13:35

6/26/2015 1:35:55 PM

Issue Classification	Application/Control No.	Applicant(s)/Patent Under Reexamination
	14275136	MARANTELLI, BERNARD J.
	Examiner	**Art Unit**
	ADETOKUNBO O TORIMIRO	3714

CPC						
Symbol					**Type**	**Version**
G07F		17	/	3244	F	2013-01-01
G07F		17	/	3258	I	2013-01-01
G07F		17	/	32	I	2013-01-01
G06Q		50	/	34	I	2013-01-01
G07F		17	/	3255	A	2013-01-01
G07F		17	/	3288	I	2013-01-01
			/			
			/			
			/			
			/			
			/			
			/			
			/			
			/			
			/			

CPC Combination Sets								
Symbol					**Type**	**Set**	**Ranking**	**Version**
			/					
			/					

(Assistant Examiner)	(Date)	**Total Claims Allowed:** 40	
/ADETOKUNBO O TORIMIRO/ Examiner.Art Unit 3714	06/26/2015	O.G. Print Claim(s)	O.G. Print Figure
(Primary Examiner)	(Date)	1	5

Issue Classification	Application/Control No.	Applicant(s)/Patent Under Reexamination
	14275136	MARANTELLI, BERNARD J.
	Examiner	**Art Unit**
	ADETOKUNBO O TORIMIRO	3714

US ORIGINAL CLASSIFICATION						INTERNATIONAL CLASSIFICATION									
CLASS		SUBCLASS				CLAIMED					NON-CLAIMED				
463		28				A	6	3	F	9 / 24					
CROSS REFERENCE(S)						A	6	3	F	13 / 00					
						G	0	6	F	17 / 00					
CLASS	SUBCLASS (ONE SUBCLASS PER BLOCK)					G	0	6	F	19 / 00					
463	20	22	25	40	42										

(Assistant Examiner)	(Date)	Total Claims Allowed: 40	
/ADETOKUNBO O TORIMIRO/ Examiner.Art Unit 3714	06/26/2015	O.G. Print Claim(s)	O.G. Print Figure
(Primary Examiner)	(Date)	1	5

Issue Classification	Application/Control No.	Applicant(s)/Patent Under Reexamination
	14275136	MARANTELLI, BERNARD J.
	Examiner	**Art Unit**
	ADETOKUNBO O TORIMIRO	3714

☒ Claims renumbered in the same order as presented by applicant ☐ CPA ☒ T.D. ☐ R.1.47

Final	Original	Final	Original	Final	Original	Final	Original	Final	Original	Final	Original	Final	Original	Final	Original

(Assistant Examiner)	(Date)	**Total Claims Allowed:** 40	
/ADETOKUNBO O TORIMIRO/ Examiner.Art Unit 3714	06/26/2015	O.G. Print Claim(s)	O.G. Print Figure
(Primary Examiner)	(Date)	1	5

IN THE UNITED STATES PATENT AND TRADEMARK OFFICE

Art Unit	: 3714	**Customer No. 035811**
Examiner	: Adetokunbo Olusegun Torimiro	
Serial No.	: 14/275,136	Docket No.: COB-13-1044CIP3-CON
Filed	: May 12, 2014	
Inventor(s)	: Bernard J. Marantelli	Confirmation No.: 9997
Title	: WAGERING APPARATUS,	
	: METHODS AND SYSTEMS	Dated: May 27, 2015

RESPONSE

Mail Stop Amendment
Commissioner for Patents
P.O. Box 1450
Alexandria, VA 22313-1450

Sir:

This is submitted in response to the Official Action dated March 12, 2015.

Claims 1-40 are pending.

The Applicant appreciates the courtesy extended to their representative by Examiner Torimiro during the telephone interview of April 28, 2015. During the course of the interview, the Applicant's representative explained the features of Claim 1, and why these features are not subject to rejection under 35 USC §101. The Examiner agreed to consider the Applicant's remarks in a formally submitted Response to the pending Office Action. The Applicant's remarks are provided in the formal response herewith.

Claims 1-40 were rejected under 35 USC §101 as allegedly being directed to non-statutory subject matter. In particular, the Office Action alleges that the claimed invention is directed to a judicial exception, namely, managing a wagering event. The Office Action alleges that managing a wagering event is "similar to the kind of 'organizing human activity' identified as abstract by the courts." The Office Action also alleges that managing a wagering event is "similar to the 'fundamental economic practices' identified as abstract by the courts." The Applicant respectfully traverses this ground for rejection for the reasons set forth below.

Among other features, Claim 1 recites:

> initiating at least one of a buy-out offer and partial buy-out offer to any number of the one or more players that are eligible to win, said buy-out offer or partial buy-out offer being initiated at any time before the wagering event has been completed;

> identifying any acceptances of said at least one of a buy-out offer and partial buy-out offer that have been initiated;
> identifying any acceptances of said at least one of a buy-out offer and partial buy-out offer that have been initiated.... (Emphasis Added)

Independent Claims 25, 31 and 36 recite similar features.

The Applicant's claims are ***not*** related to a fundamental economic practice. Instead, the independent claims relate to a gaming environment in which players may leverage their potential for winning a wagering event at any time before the wagering event has been completed. Thus, the Applicant's invention provides players the ability to dispose of their opportunity to win (in whole through a buy-out offer or a fractional amount through a partial buy-out offer), prior to the wagering event being completed. For example, the system controller may offer a player the ability to fully or partially end a still pending wagering event, thereby providing the player the opportunity to avoid the risk of being eliminated at the end of the event.

Claim 1 (as well as independent Claims 25, 31 and 36), however, is ***not financial*** (i.e., a fundamental economic practice) in nature. The claimed features of initiating buy-out offer(s) or partial buy-out offer(s) and identifying acceptance of buy-out offer(s) or partial buy-out offer(s) do not relate to a fundamental economic practice. Instead, as noted above, these features pertain to a player's ability to leverage his potential for winning a wagering event and/or to reduce being completely eliminated from a potential win, regardless of whether "winning" involves a cash prize or not. In addition, the Applicant's feature of determining if any of the players have won (also recited in Claim 1) is not a fundamental economic practice. In fact, there is *no limitation, anywhere in the Applicant's independent claims that is directly related to a fundamental economic practice*. Indeed, whether or not a player wins is irrelevant to the claimed invention. At best, the ability to win a award is ancillary to the claimed invention, and further an award does not even need to be financially related.

The Applicant notes that dependent Claim 2 recites that players are eligible to win an award. However, Claim 2 shows that the award itself may include any type of award, such as nonmonetary awards, a prize, food, lodging, entertainment, gaming opportunities. As such, it is clear that even the award itself is not necessarily financial-related. That said, even if the award were a cash prize, the act of winning the award would still not render the claims financially related. This is because winning is not germane to the claimed invention. To the contrary,

innovation and utility of the claimed invention are in the ability of a player to surrender all or a portion of their potential opportunity to win a wagering event. For this reason, winning is not a limitation (Claim 1, for example).

On pages 2-3 of the Office Action, the Examiner asserts that managing a wagering event can be performed mentally, without a computer or in a computer and is similar to the kind of "organizing human activity" identified as abstract by the courts. It is also asserted that the recitation of computers and electronic limitations amounts to mere instructions to implement the abstract idea on a computer device. The Applicant respectfully disagrees. The claims are applied by use of a *particular* machine. Here, the claims explicitly recite that the claimed steps are indeed performed by a particular (programmed) machine (i.e., wagering input device(s) in communication with a system controller where the system controller is adapted for performing particular steps), thereby applying a judicial exception with use of a particular machine.

Accordingly, for at least the reasons set forth above, Claims 1-31 are ***not*** related a fundamental economic practice, are ***not*** related to an organizing human activity, are ***not*** an abstract idea and are, thus, statutory subject matter. Therefore, the Applicant respectfully requests that the rejection of Claims 1-40 under 35 USC §101 be withdrawn.

In view of the remarks set forth above, the above-identified application is in condition for allowance, which action is respectfully requested.

Respectfully submitted,

Paul A. Taufer
Reg. No. 35,703

PAT/nn
(215) 656-3385

Electronic Acknowledgement Receipt

EFS ID:	22460065
Application Number:	14275136
International Application Number:	
Confirmation Number:	9997
Title of Invention:	WAGERING APPARATUS, METHODS AND SYSTEMS
First Named Inventor/Applicant Name:	Bernard J. Marantelli
Customer Number:	35811
Filer:	Paul A. Taufer/Nancy Nunez
Filer Authorized By:	Paul A. Taufer
Attorney Docket Number:	COB-13-1044CIP3-CON
Receipt Date:	27-MAY-2015
Filing Date:	12-MAY-2014
Time Stamp:	15:21:44
Application Type:	Utility under 35 USC 111(a)

Payment information:

Submitted with Payment	no

File Listing:

Document Number	Document Description	File Name	File Size(Bytes)/ Message Digest	Multi Part /.zip	Pages (if appl.)
1	Amendment/Req. Reconsideration-After Non-Final Reject	Resp.pdf	139249 8dab726e612f0ab8c7411b90c9130debea0 06623	no	3

Warnings:

Information:

Total Files Size (in bytes):	139249

This Acknowledgement Receipt evidences receipt on the noted date by the USPTO of the indicated documents, characterized by the applicant, and including page counts, where applicable. It serves as evidence of receipt similar to a Post Card, as described in MPEP 503.

New Applications Under 35 U.S.C. 111
If a new application is being filed and the application includes the necessary components for a filing date (see 37 CFR 1.53(b)-(d) and MPEP 506), a Filing Receipt (37 CFR 1.54) will be issued in due course and the date shown on this Acknowledgement Receipt will establish the filing date of the application.

National Stage of an International Application under 35 U.S.C. 371
If a timely submission to enter the national stage of an international application is compliant with the conditions of 35 U.S.C. 371 and other applicable requirements a Form PCT/DO/EO/903 indicating acceptance of the application as a national stage submission under 35 U.S.C. 371 will be issued in addition to the Filing Receipt, in due course.

New International Application Filed with the USPTO as a Receiving Office
If a new international application is being filed and the international application includes the necessary components for an international filing date (see PCT Article 11 and MPEP 1810), a Notification of the International Application Number and of the International Filing Date (Form PCT/RO/105) will be issued in due course, subject to prescriptions concerning national security, and the date shown on this Acknowledgement Receipt will establish the international filing date of the application.

Form PTO-1449 US DEPARTMENT OF COMMERCE PATENT AND TRADEMARK OFFICE	ATTY. DOCKET NO. COB-13-1044CIP3-CON	SERIAL NO. 14/275,136
	APPLICANT Bernard J. Marantelli	
LIST OF PUBLICATIONS CITED BY APPLICANT *(Use several sheets if necessary)*	FILING DATE May 12, 2014	GROUP 3714

US PATENT DOCUMENTS

EXAMINER INITIAL*		DOCUMENT NUMBER	DATE	NAME	CLASS	SUBCLASS	FILING DATE IF APPROPRIATE
	AA						
	AB						
	AC						
	AD						
	AE						
	AF						
	AG						
	AH						
	AI						
	AJ						
	AK						

FOREIGN PATENT DOCUMENTS

		DOCUMENT NUMBER	DATE	COUNTRY	CLASS	SUBCLASS	TRANSLATION YES	TRANSLATION NO
	AL							
	AM							
	AN							
	AO							
	AP							

OTHER PUBLICATIONS (Including Author, Title, Date, Pertinent Pages, Etc.)

	AR	A copy of the International Preliminary Report on Patentability issued on March 19, 2015 in corresponding International Application No. PCT/IB2013/002965. A copy of the International Preliminary Report on Patentability issued on March 19, 2015 in corresponding International Application No. PCT/IB2013/003028.
	AS	
	AT	

EXAMINER	DATE CONSIDERED

*EXAMINER: Initial if publication considered, whether or not citation is in conformance with MPEP 609; Draw line through citation if not in conformance and not considered. Include copy of this form with next communication to Applicant.

PATENT COOPERATION TREAT

From the INTERNATIONAL BUREAU

PCT

NOTIFICATION CONCERNING TRANSMITTAL OF COPY OF INTERNATIONAL PRELIMINARY REPORT ON PATENTABILITY (CHAPTER I OF THE PATENT COOPERATION TREATY)

(PCT Rule 44bis.1(c))

To:

RECEIVED
08 APR 2015

FISHER ADAMS KELLY
Level 29
12 Creek Street
Brisbane, QLD 4000
AUSTRALIE

Date of mailing *(day/month/year)* 19 March 2015 (19.03.2015)	
Applicant's or agent's file reference 28101PC1-ERG/S/W	**IMPORTANT NOTICE**

International application No.	International filing date *(day/month/year)*	Priority date *(day/month/year)*
PCT/IB2013/002965	20 August 2013 (20.08.2013)	06 September 2012 (06.09.2012)

Applicant

DIOGENES LIMITED et al

The International Bureau transmits herewith a copy of the international preliminary report on patentability (Chapter I of the Patent Cooperation Treaty)

The International Bureau of WIPO 34, chemin des Colombettes 1211 Geneva 20, Switzerland Facsimile No. +41 22 338 82 70	Authorized officer Cécile Chatel e-mail: ro.ib@wipo.int

Form PCT/IB/326 (January 2004)

PATENT COOPERATION TREATY

PCT

INTERNATIONAL PRELIMINARY REPORT ON PATENTABILITY

(Chapter I of the Patent Cooperation Treaty)

(PCT Rule 44*bis*)

Applicant's or agent's file reference 28101PC1-ERG/S/W	**FOR FURTHER ACTION**	See item 4 below
International application No. PCT/IB2013/002965	International filing date *(day/month/year)* 20 August 2013 (20.08.2013)	Priority date *(day/month/year)* 06 September 2012 (06.09.2012)
International Patent Classification (8th edition unless older edition indicated) See relevant information in Form PCT/ISA/237		
Applicant DIOGENES LIMITED		

1. This international preliminary report on patentability (Chapter I) is issued by the International Bureau on behalf of the International Searching Authority under Rule 44 *bis*.1(a).

2. This REPORT consists of a total of 6 sheets, including this cover sheet.

   In the attached sheets, any reference to the written opinion of the International Searching Authority should be read as a reference to the international preliminary report on patentability (Chapter I) instead.

3. This report contains indications relating to the following items:

☒	Box No. I	Basis of the report
☐	Box No. II	Priority
☐	Box No. III	Non-establishment of opinion with regard to novelty, inventive step and industrial applicability
☐	Box No. IV	Lack of unity of invention
☒	Box No. V	Reasoned statement under Article 35(2) with regard to novelty, inventive step or industrial applicability; citations and explanations supporting such statement
☐	Box No. VI	Certain documents cited
☐	Box No. VII	Certain defects in the international application
☒	Box No. VIII	Certain observations on the international application

4. The International Bureau will communicate this report to designated Offices in accordance with Rules 44*bis*.3(c) and 93*bis*.1 but not, except where the applicant makes an express request under Article 23(2), before the expiration of 30 months from the priority date (Rule 44*bis* .2).

	Date of issuance of this report 10 March 2015 (10.03.2015)
The International Bureau of WIPO 34, chemin des Colombettes 1211 Geneva 20, Switzerland Facsimile No. +41 22 338 82 70	Authorized officer Cécile Chatel e-mail: ro.ib@wipo.int

Form PCT/IB/373 (January 2004)

PATENT COOPERATION TREATY

From the:
INTERNATIONAL SEARCHING AUTHORITY

To:

FISHER ADAMS KELLY
Level 29
12 Creek Street
Brisbane, QLD 4000
Australia

PCT

WRITTEN OPINION OF THE
INTERNATIONAL SEARCHING AUTHORITY

(PCT Rule 43*bis*.1)

Date of mailing *(day/month/year)*
04 September 2014

Applicant's or agent's file reference	FOR FURTHER ACTION
28101PC1-ERG/S/W	See paragraph 2 below

International application No.	International filing date *(day/month/year)*	Priority date *(day/month/year)*
PCT/IB2013/002965	20 August 2013	02 August 2013

International Patent Classification (IPC) or both national classification and IPC
A63F 13/45 (2014.01) A63F 13/00 (2014.01)

Applicant
DIOGENES LIMITED

1. This opinion contains indications relating to the following items:

- [X] Box No. I — Basis of the opinion
- [ ] Box No. II — Priority
- [ ] Box No. III — Non-establishment of opinion with regard to novelty, inventive step and industrial applicability
- [ ] Box No. IV — Lack of unity of invention
- [X] Box No. V — Reasoned statement under Rule 43*bis*.1(a)(i) with regard to novelty, inventive step and industrial applicability; citations and explanations supporting such statement
- [ ] Box No. VI — Certain documents cited
- [ ] Box No. VII — Certain defects in the international application
- [X] Box No. VIII — Certain observations on the international application

2. **FURTHER ACTION**

If a demand for international preliminary examination is made, this opinion will be considered to be a written opinion of the International Preliminary Examining Authority ("IPEA") except that this does not apply where the applicant chooses an Authority other than this one to be the IPEA and the chosen IPEA has notified the International Bureau under Rule 66.1*bis*(b) that written opinions of this International Searching Authority will not be so considered.

If this opinion is, as provided above, considered to be a written opinion of the IPEA, the applicant is invited to submit to the IPEA a written reply together, where appropriate, with amendments, before the expiration of 3 months from the date of mailing of Form PCT/ISA/220 or before the expiration of 22 months from the priority date, whichever expires later.

For further options, see Form PCT/ISA/220.

Name and mailing address of the ISA	Date of completion of this opinion	**Authorised Officer**
AUSTRALIAN PATENT OFFICE PO BOX 200, WODEN ACT 2606, AUSTRALIA Email address: pct@ipaustralia.gov.au	4 September 2014	Cade McTaggart AUSTRALIAN PATENT OFFICE (ISO 9001 Quality Certified Service) Telephone No. 0262837926

WRITTEN OPINION OF THE INTERNATIONAL SEARCHING AUTHORITY

International application No.

PCT/IB2013/002965

Box No. I **Basis of this opinion**

1. With regard to the **language**, this opinion has been established on the basis of:

   [X] The international application in the language in which it was filed

   [ ] A translation of the international application into, , which is the language of a translation furnished for the purposes of international search (under Rules 12.3(a) and 23.1(b)).

2. [ ] This opinion has been established taking into account **the rectification of an obvious mistake** authorized by or notified to this Authority under Rule 91 (Rule 43*bis*.1(a))

3. With regard to any **nucleotide and/or amino acid sequence** disclosed in the international application, this opinion has been established on the basis of a sequence listing filed or furnished:

   a. (means)

   [ ] on paper

   [ ] in electronic form

   b. (time)

   [ ] in the international application as filed

   [ ] together with the international application in electronic form

   [ ] subsequently to this Authority for the purposes of search

4. [ ] In addition, in the case that more than one version or copy of a sequence listing has been filed or furnished, the required statements that the information in the subsequent or additional copies is identical to that in the application as filed or does not go beyond the application as filed, as appropriate, were furnished.

5. Additional comments:

WRITTEN OPINION OF THE INTERNATIONAL SEARCHING AUTHORITY	International Application No. PCT/IB2013/002965

Box No. V **Reasoned statement under Rule 43*bis*.1(a)(i) with regard to novelty, inventive step or industrial applicability; citations and explanations supporting such statement**

1. Statement

Novelty (N)	Claims **1-30**	**YES**
	Claims **None**	**NO**
Inventive step (IS)	Claims **1-30**	**YES**
	Claims **None**	**NO**
Industrial applicability (IA)	Claims **1-30**	**YES**
	Claims **None**	**NO**

2. CITATIONS AND EXPLANATIONS:

CITATIONS

D1: US 2003/0078093 A1 (SIMMS et al.) 24 April 2003
D2: US 2003/0040360 A1 (KAMINKOW) 27 February 2003
D3: US 8105149 B2 (DEWAAL) 31 January 2012
D4: US 7963838 B2 (GAUSELMANN) 21 June 2011
D5: US 7883403 B2 (LOW et al.) 08 February 2011
D6: US 7942735 B2 (MEYER et al.) 17 May 2011
D7: AU 2011205028 A1 (ARISTOCRAT TECHNOLOGIES AUSTRALIA PTY LIMITED) 18 August 2011

NOVELTY (N)

Claims 1, 24 and 27 meet the criteria set forth in PCT Article 33(2) for novelty. The prior art published before the priority date does not disclose a wagering system and method to conduct a multi-outcome wagering event comprising one or more slot machine games resulting in a defined number of reel outcomes, and wherein a player is presented with at least one of a buy-out offer and a partial buy-out offer prior to completion of all of the defined number of reel outcomes. Wherein a player accepting the buy-out offer is no longer eligible to exclusively win the at least one jackpot, a player accepting a partial buy-out offer remains eligible to win at least a portion of the at least one jackpot; completing the remainder of the defined number of reel outcomes and determining if any of the players have won the at least one jackpot or portion thereof.

Therefore, the subject matter of claims 1, 24 and 27 is new and meets the requirements of Article 33(2) of the PCT with regard to novelty.

Appended claims 2-23, 25-26 and 28-30 add further features to those defined in claims 1, 24 and 27 and are therefore also novel.

INVENTIVE STEP (IS)

Claims 1, 24 and 27 meet the criteria set out in PCT Article 33(3) with regard to the requirement of Inventive Step because the prior art does not obviously suggest to a person skilled in the art a wagering system and method to conduct a multi-outcome wagering event comprising one or more slot machine games resulting in a defined number of reel outcomes, and wherein a player is presented with at least one of a buy-out offer and a partial buy-out offer prior to completion of all of the defined number of reel outcomes. Wherein a player accepting the buy-out offer is no longer eligible to exclusively win the at least one jackpot, a player accepting a partial buy-out offer remains eligible to win at least a portion of the at least one jackpot; completing the remainder of the defined number of reel outcomes and determining if any of the players have won the at least one jackpot or portion thereof.

The claimed invention is not obvious in the light of any of the cited documents nor is it disclosed in any obvious combination of them. It is also considered that it would not be obvious to a person skilled in the art in the light of common general knowledge either by itself or in combination with any of these documents.

Therefore, the subject matter of claims 1, 24 and 27 is not obvious and meets the requirements of Article 33(3) of the PCT with regard to inventive step.

Claims 2-23, 25-26 and 28-30 embody further aspects of the inventive concept and therefore also meet the requirements of Article 33(3) of the PCT

INDUSTRIAL APPLICABILITY (IA)

The invention defined in the claims is considered to meet the requirements of Industrial Applicability under Article 33(4) of the PCT because it can be made by, or used in, industry.

WRITTEN OPINION OF THE INTERNATIONAL SEARCHING AUTHORITY	International Application No.
Box No. VIII Certain observations in the international application	**PCT/IB2013/002965**

The following observations on the clarity of the claims, description, and drawings or on the question whether the claims are fully supported by the description, are made:

Claim 4 is not clear because I cannot find an antecedent to the phrase 'live or pre-recorded event' when the claim is appended to claim 2. For the purposes of this report claim 4 has been read as appended to claim 3.

4/2/15

PATENT COOPERATION TREAT

PCT/IB2013/003028

From the INTERNATIONAL BUREAU

PCT

NOTIFICATION CONCERNING TRANSMITTAL OF COPY OF INTERNATIONAL PRELIMINARY REPORT ON PATENTABILITY (CHAPTER I OF THE PATENT COOPERATION TREATY)
(PCT Rule 44bis.1(c))

To:

RECEIVED
08 APR 2015

GRAF, Ernest
Fisher Adams Kelly
Level 29, 12 Creek Street
Brisbane QLD 4001
AUSTRALIE

Date of mailing *(day/month/year)* 19 March 2015 (19.03.2015)	
Applicant's or agent's file reference 28100PC1-ERG	IMPORTANT NOTICE

International application No.	International filing date *(day/month/year)*	Priority date *(day/month/year)*
PCT/IB2013/003028	20 August 2013 (20.08.2013)	06 September 2012 (06.09.2012)

Applicant
DIOGENES LIMITED et al

The International Bureau transmits herewith a copy of the international preliminary report on patentability (Chapter I of the Patent Cooperation Treaty)

The International Bureau of WIPO 34, chemin des Colombettes 1211 Geneva 20, Switzerland Facsimile No. +41 22 338 82 70	Authorized officer Cécile Chatel e-mail: ro.ib@wipo.int

Form PCT/IB/326 (January 2004)

PATENT COOPERATION TREATY

PCT

INTERNATIONAL PRELIMINARY REPORT ON PATENTABILITY
(Chapter I of the Patent Cooperation Treaty)

(PCT Rule 44*bis*)

Applicant's or agent's file reference 28100PC1-ERG	**FOR FURTHER ACTION**	See item 4 below
International application No. PCT/IB2013/003028	International filing date *(day/month/year)* 20 August 2013 (20.08.2013)	Priority date *(day/month/year)* 06 September 2012 (06.09.2012)
International Patent Classification (8th edition unless older edition indicated) See relevant information in Form PCT/ISA/237		
Applicant DIOGENES LIMITED		

1. This international preliminary report on patentability (Chapter I) is issued by the International Bureau on behalf of the International Searching Authority under Rule 44 *bis*.1(a).

2. This REPORT consists of a total of 5 sheets, including this cover sheet.

   In the attached sheets, any reference to the written opinion of the International Searching Authority should be read as a reference to the international preliminary report on patentability (Chapter I) instead.

3. This report contains indications relating to the following items:

☒	Box No. I	Basis of the report
☐	Box No. II	Priority
☐	Box No. III	Non-establishment of opinion with regard to novelty, inventive step and industrial applicability
☐	Box No. IV	Lack of unity of invention
☒	Box No. V	Reasoned statement under Article 35(2) with regard to novelty, inventive step or industrial applicability; citations and explanations supporting such statement
☐	Box No. VI	Certain documents cited
☐	Box No. VII	Certain defects in the international application
☐	Box No. VIII	Certain observations on the international application

4. The International Bureau will communicate this report to designated Offices in accordance with Rules 44*bis*.3(c) and 93*bis*.1 but not, except where the applicant makes an express request under Article 23(2), before the expiration of 30 months from the priority date (Rule 44*bis* .2).

	Date of issuance of this report 10 March 2015 (10.03.2015)
The International Bureau of WIPO 34, chemin des Colombettes 1211 Geneva 20, Switzerland Facsimile No. +41 22 338 82 70	Authorized officer Cécile Chatel e-mail: ro.ib@wipo.int

Form PCT/IB/373 (January 2004)

PATENT COOPERATION TREATY

From the
INTERNATIONAL SEARCHING AUTHORITY

To:

see form PCT/ISA/220

PCT

WRITTEN OPINION OF THE INTERNATIONAL SEARCHING AUTHORITY

(PCT Rule 43*bis*.1)

Date of mailing
(day/month/year) see form PCT/ISA/210 (second sheet)

Applicant's or agent's file reference
see form PCT/ISA/220

FOR FURTHER ACTION
See paragraph 2 below

International application No.	International filing date *(day/month/year)*	Priority date *(day/month/year)*
PCT/IB2013/003028	20.08.2013	06.09.2012

International Patent Classification (IPC) or both national classification and IPC
INV. G07F17/32 G06Q50/34

Applicant
DIOGENES LIMITED

1. This opinion contains indications relating to the following items:

- ☒ Box No. I Basis of the opinion
- ☐ Box No. II Priority
- ☐ Box No. III Non-establishment of opinion with regard to novelty, inventive step and industrial applicability
- ☐ Box No. IV Lack of unity of invention
- ☒ Box No. V Reasoned statement under Rule 43*bis*.1(a)(i) with regard to novelty, inventive step and industrial applicability; citations and explanations supporting such statement
- ☐ Box No. VI Certain documents cited
- ☐ Box No. VII Certain defects in the international application
- ☐ Box No. VIII Certain observations on the international application

2. **FURTHER ACTION**

If a demand for international preliminary examination is made, this opinion will usually be considered to be a written opinion of the International Preliminary Examining Authority ("IPEA") except that this does not apply where the applicant chooses an Authority other than this one to be the IPEA and the chosen IPEA has notifed the International Bureau under Rule 66.1*bis*(b) that written opinions of this International Searching Authority will not be so considered.

If this opinion is, as provided above, considered to be a written opinion of the IPEA, the applicant is invited to submit to the IPEA a written reply together, where appropriate, with amendments, before the expiration of 3 months from the date of mailing of Form PCT/ISA/220 or before the expiration of 22 months from the priority date, whichever expires later.

For further options, see Form PCT/ISA/220.

Name and mailing address of the ISA:	Date of completion of this opinion	Authorized Officer
European Patent Office P.B. 5818 Patentlaan 2 NL-2280 HV Rijswijk - Pays Bas Tel. +31 70 340 - 2040 Fax: +31 70 340 - 3016	see form PCT/ISA/210	Bassanini, Anna Telephone No. +31 70 340-2036

Form PCT/ISA/237 (Cover Sheet) (July 2009)

Box No. I Basis of the opinion

1. With regard to the **language**, this opinion has been established on the basis of:

   ☒ the international application in the language in which it was filed

   ☐ a translation of the international application into , which is the language of a translation furnished for the purposes of international search (Rules 12.3(a) and 23.1 (b)).

2. ☐ This opinion has been established taking into account the **rectification of an obvious mistake** authorized by or notified to this Authority under Rule 91 (Rule 43bis.1(a))

3. With regard to any **nucleotide and/or amino acid sequence** disclosed in the international application, this opinion has been established on the basis of a sequence listing filed or furnished:

   a. (means)

   ☐ on paper

   ☐ in electronic form

   b. (time)

   ☐ in the international application as filed

   ☐ together with the international application in electronic form

   ☐ subsequently to this Authority for the purposes of search

4. ☐ In addition, in the case that more than one version or copy of a sequence listing has been filed or furnished, the required statements that the information in the subsequent or additional copies is identical to that in the application as filed or does not go beyond the application as filed, as appropriate, were furnished.

5. Additional comments:

Box No. V Reasoned statement under Rule 43*bis*.1(a)(i) with regard to novelty, inventive step or industrial applicability; citations and explanations supporting such statement

1. Statement

Novelty (N)	Yes:	Claims	1-30
	No:	Claims	
Inventive step (IS)	Yes:	Claims	
	No:	Claims	1-30
Industrial applicability (IA)	Yes:	Claims	1-30
	No:	Claims	

2. Citations and explanations

   see separate sheet

Re Item V

Reasoned statement with regard to novelty, inventive step or industrial applicability; citations and explanations supporting such statement

1 The claimed subject matter, with due regard to the description and drawings, relates to processes comprised in the list of subject matter and activities for which no search is required under Rule 39 PCT.

The only identifiable technical aspects of the claimed invention are deemed to relate to the use of conventional, general-purpose data processing technology. The information technology employed is considered to have been generally known as it was widely available to everyone at the date of priority of the present application. The notoriety of such prior art cannot reasonably be contested, and no documentary evidence was therefore considered required.

2 Claims 1-30 of the application, although not completely devoid of technical character, are thus regarded as merely specifying commonplace features relating to a technological implementation of subject matter for which no search is required under Rule 39 PCT, without involving an inventive step (Article 33(3) PCT). No technical solution defined in response to a problem could be identified within the content of the application as originally filed. Any problems which are addressed do not appear to require a technical, but rather an administrative or organisational, i.e. business, solution. Whilst the implementation of such solutions may include the use of generic technical features, these merely serve their well known functions as would be recognised by the skilled person in the technical field under consideration.

2.1 The subject-matter of this application relates to wagering. This is *per se* a non-technical aspect, for which no search is required under Rule39 PCT.

2.2 The problem being addressed resides in creating new wagering products to generate and maintain consumer interest (see the description, page 1, l. 31-32). This problem is also non-technical.

2.3 On the non-technical level, the solution proposed by the present application consists of creating a unique betting product where players make selections in a number of different "legs" including a variety of different events. Players who correctly select a certain portion of the winners of each leg have an opportunity to obtain monetary and/or other prizes. This solution is *per se* a gaming and business, i.e. non-technical scheme.

2.4 The implementation of this solution as proposed in the present application is a mere automation of the above mentioned non-technical scheme. The person skilled in the art, made aware of the non-technical method, guided by the constraints implied by this method, would implement it without the exercise of an inventive activity. No technical problem has been convincingly laid out and none is apparent to the person skilled in the art from reading the current application. Therefore, the problem dealt with is non-technical. The only technical aspect that is present is the use of a computer system for implementing the basic administrative task. However, the feature of executing this method on a computer system does not go beyond the basic computer functions associated with the implementation of any administrative task on a computer system which are standard technology and form part of the general knowledge of the skilled person in the art. When analysing the application, the examiner was unable to discover any technical details that go beyond mentioning at a very high level the presence of a networked computer system and ordinary data processing. It is also noted that no further technical effect can be seen in the implementation of this administrative method.

2.5 The defined subject-matter accordingly lacks inventive step, as no technical solution to a realised technical problem has been proposed and no technical effect or result which would be unexpected or surprising to the person skilled in the art is apparent.

2.6 The person skilled in the art, with general knowledge of the technical field and normal access to examples and textbooks, would apply the measures as described in the present application and defined in its claims without the use of inventive skill to arrive at the desired result. As noted in section 1 of this communication, the examiner does not find it necessary at present to refer to any particular art in support of this view due to the paucity of technical definition going beyond the everyday for the person skilled in the technical art.

Electronic Acknowledgement Receipt

EFS ID:	22305273
Application Number:	14275136
International Application Number:	
Confirmation Number:	9997
Title of Invention:	WAGERING APPARATUS, METHODS AND SYSTEMS
First Named Inventor/Applicant Name:	Bernard J. Marantelli
Customer Number:	35811
Filer:	Paul A. Taufer/Nancy Nunez
Filer Authorized By:	Paul A. Taufer
Attorney Docket Number:	COB-13-1044CIP3-CON
Receipt Date:	11-MAY-2015
Filing Date:	12-MAY-2014
Time Stamp:	13:17:15
Application Type:	Utility under 35 USC 111(a)

Payment information:

Submitted with Payment	no

File Listing:

Document Number	Document Description	File Name	File Size(Bytes)/ Message Digest	Multi Part /.zip	Pages (if appl.)
1		SIDS1449.pdf	76832 fce4e1a34f68a5eb09cc3eed1c0351617c26f f85	yes	2

	Multipart Description/PDF files in .zip description		
	Document Description	**Start**	**End**
	Transmittal Letter	1	1
	Information Disclosure Statement (IDS) Form (SB08)	2	2

Warnings:					
Information:					
2	Other Reference-Patent/App/Search documents	CIP1IPRP.pdf	267680 1ec92e908e1a172d008e76b44a53a9f9d95aaf5f	no	7
Warnings:					
Information:					
3	Other Reference-Patent/App/Search documents	CIP3IPRP.pdf	283279 1def649f111908906f126829c8ff8fa0d2115ba6	no	6
Warnings:					
Information:					
		Total Files Size (in bytes):	627791		

This Acknowledgement Receipt evidences receipt on the noted date by the USPTO of the indicated documents, characterized by the applicant, and including page counts, where applicable. It serves as evidence of receipt similar to a Post Card, as described in MPEP 503.

<u>New Applications Under 35 U.S.C. 111</u>
If a new application is being filed and the application includes the necessary components for a filing date (see 37 CFR 1.53(b)-(d) and MPEP 506), a Filing Receipt (37 CFR 1.54) will be issued in due course and the date shown on this Acknowledgement Receipt will establish the filing date of the application.

<u>National Stage of an International Application under 35 U.S.C. 371</u>
If a timely submission to enter the national stage of an international application is compliant with the conditions of 35 U.S.C. 371 and other applicable requirements a Form PCT/DO/EO/903 indicating acceptance of the application as a national stage submission under 35 U.S.C. 371 will be issued in addition to the Filing Receipt, in due course.

<u>New International Application Filed with the USPTO as a Receiving Office</u>
If a new international application is being filed and the international application includes the necessary components for an international filing date (see PCT Article 11 and MPEP 1810), a Notification of the International Application Number and of the International Filing Date (Form PCT/RO/105) will be issued in due course, subject to prescriptions concerning national security, and the date shown on this Acknowledgement Receipt will establish the international filing date of the application.

IN THE UNITED STATES PATENT AND TRADEMARK OFFICE

Art Unit	: 3714	**Customer No. 035811**
Examiner	: Adetokunbo Olusegun Torimiro	
Serial No.	: 14/275,136	Docket No.: COB-13-1044CIP3-CON
Filed	: May 12, 2014	
Inventor(s)	: Bernard J. Marantelli	Confirmation No.: 9997
Title	: WAGERING APPARATUS,	
	: METHODS AND SYSTEMS	Dated: May 11, 2015

SUPPLEMENTAL INFORMATION DISCLOSURE STATEMENT

Commissioner for Patents
P.O. Box 1450
Alexandria, VA 22313-1450

Sir:

The Applicant encloses Form PTO-1449 together with a copy of two (2) International Preliminary Reports on Patentability issued on March 19, 2015 in the corresponding international patent applications. The reports are submitted under 37 CFR §1.56 and are believed related to this application for the reasons stated.

Applicant certifies that the items of information contained in the Supplemental Information Disclosure Statement were first cited in any communication from any foreign patent office in a counterpart foreign application not more than three months ago.

The Applicant respectfully requests that this Supplemental Information Disclosure Statement be officially entered into the file and that appropriate notification be made that it was considered by the Examiner.

Respectfully submitted,

Paul A. Taufer
Reg. No. 35,703
Richard L. Cruz
Reg. No. 52,783

PAT/RLC/nn
(215) 656-3385

EAST\100550741.1

UNITED STATES PATENT AND TRADEMARK OFFICE

UNITED STATES DEPARTMENT OF COMMERCE
United States Patent and Trademark Office
Address: COMMISSIONER FOR PATENTS
P.O. Box 1450
Alexandria, Virginia 22313-1450
www.uspto.gov

APPLICATION NO.	FILING DATE	FIRST NAMED INVENTOR	ATTORNEY DOCKET NO.	CONFIRMATION NO.
14/275,136	05/12/2014	Bernard J. Marantelli	COB-13-1044CIP3-CON	9997

35811 7590 05/01/2015
IP GROUP OF DLA PIPER LLP (US)
ONE LIBERTY PLACE
1650 MARKET ST, SUITE 4900
PHILADELPHIA, PA 19103

EXAMINER
TORIMIRO, ADETOKUNBO OLUSEGUN

ART UNIT	PAPER NUMBER
3714	

NOTIFICATION DATE	DELIVERY MODE
05/01/2015	ELECTRONIC

Please find below and/or attached an Office communication concerning this application or proceeding.

The time period for reply, if any, is set in the attached communication.

Notice of the Office communication was sent electronically on above-indicated "Notification Date" to the following e-mail address(es):

pto.phil@dlapiper.com

Applicant-Initiated Interview Summary	Application No.	Applicant(s)	
	14/275,136	MARANTELLI, BERNARD J.	
	Examiner	Art Unit	
	ADETOKUNBO O. TORIMIRO	3714	

All participants (applicant, applicant's representative, PTO personnel):

(1) *ADETOKUNBO O. TORIMIRO*. (3)_____.

(2) *Richard Cruz*. (4)_____.

Date of Interview: *28 April 2015*.

Type: ☒ Telephonic ☐ Video Conference
☐ Personal [copy given to: ☐ applicant ☐ applicant's representative]

Exhibit shown or demonstration conducted: ☐ Yes ☒ No.
If Yes, brief description: _____.

Issues Discussed ☒101 ☐112 ☐102 ☐103 ☐Others
(For each of the checked box(es) above, please describe below the issue and detailed description of the discussion)

Claim(s) discussed: *1*.

Identification of prior art discussed: _____.

Substance of Interview
(For each issue discussed, provide a detailed description and indicate if agreement was reached. Some topics may include: identification or clarification of a reference or a portion thereof, claim interpretation, proposed amendments, arguments of any applied references etc...)

The 35 USC 101 rejection was discussed. Claims clarification was made to provide better understanding of the claims and the 35 USC 101 rejection. The examiner will fully and fairly consider the Applicant's timely filed response to the office..

Applicant recordation instructions: The formal written reply to the last Office action must include the substance of the interview. (See MPEP section 713.04). If a reply to the last Office action has already been filed, applicant is given a non-extendable period of the longer of one month or thirty days from this interview date, or the mailing date of this interview summary form, whichever is later, to file a statement of the substance of the interview

Examiner recordation instructions: Examiners must summarize the substance of any interview of record. A complete and proper recordation of the substance of an interview should include the items listed in MPEP 713.04 for complete and proper recordation including the identification of the general thrust of each argument or issue discussed, a general indication of any other pertinent matters discussed regarding patentability and the general results or outcome of the interview, to include an indication as to whether or not agreement was reached on the issues raised.

☐ Attachment

/ADETOKUNBO O TORIMIRO/
Examiner, Art Unit 3714

Summary of Record of Interview Requirements

Manual of Patent Examining Procedure (MPEP), Section 713.04, Substance of Interview Must be Made of Record
A complete written statement as to the substance of any face-to-face, video conference, or telephone interview with regard to an application must be made of record in the application whether or not an agreement with the examiner was reached at the interview.

Title 37 Code of Federal Regulations (CFR) § 1.133 Interviews
Paragraph (b)

In every instance where reconsideration is requested in view of an interview with an examiner, a complete written statement of the reasons presented at the interview as warranting favorable action must be filed by the applicant. An interview does not remove the necessity for reply to Office action as specified in §§ 1.111, 1.135. (35 U.S.C. 132)

37 CFR §1.2 Business to be transacted in writing.
All business with the Patent or Trademark Office should be transacted in writing. The personal attendance of applicants or their attorneys or agents at the Patent and Trademark Office is unnecessary. The action of the Patent and Trademark Office will be based exclusively on the written record in the Office. No attention will be paid to any alleged oral promise, stipulation, or understanding in relation to which there is disagreement or doubt.

The action of the Patent and Trademark Office cannot be based exclusively on the written record in the Office if that record is itself incomplete through the failure to record the substance of interviews.

It is the responsibility of the applicant or the attorney or agent to make the substance of an interview of record in the application file, unless the examiner indicates he or she will do so. It is the examiner's responsibility to see that such a record is made and to correct material inaccuracies which bear directly on the question of patentability.

Examiners must complete an Interview Summary Form for each interview held where a matter of substance has been discussed during the interview by checking the appropriate boxes and filling in the blanks. Discussions regarding only procedural matters, directed solely to restriction requirements for which interview recordation is otherwise provided for in Section 812.01 of the Manual of Patent Examining Procedure, or pointing out typographical errors or unreadable script in Office actions or the like, are excluded from the interview recordation procedures below. Where the substance of an interview is completely recorded in an Examiners Amendment, no separate Interview Summary Record is required.

The Interview Summary Form shall be given an appropriate Paper No., placed in the right hand portion of the file, and listed on the "Contents" section of the file wrapper. In a personal interview, a duplicate of the Form is given to the applicant (or attorney or agent) at the conclusion of the interview. In the case of a telephone or video-conference interview, the copy is mailed to the applicant's correspondence address either with or prior to the next official communication. If additional correspondence from the examiner is not likely before an allowance or if other circumstances dictate, the Form should be mailed promptly after the interview rather than with the next official communication.

The Form provides for recordation of the following information:
- Application Number (Series Code and Serial Number)
- Name of applicant
- Name of examiner
- Date of interview
- Type of interview (telephonic, video-conference, or personal)
- Name of participant(s) (applicant, attorney or agent, examiner, other PTO personnel, etc.)
- An indication whether or not an exhibit was shown or a demonstration conducted
- An identification of the specific prior art discussed
- An indication whether an agreement was reached and if so, a description of the general nature of the agreement (may be by attachment of a copy of amendments or claims agreed as being allowable). Note: Agreement as to allowability is tentative and does not restrict further action by the examiner to the contrary.
- The signature of the examiner who conducted the interview (if Form is not an attachment to a signed Office action)

It is desirable that the examiner orally remind the applicant of his or her obligation to record the substance of the interview of each case. It should be noted, however, that the Interview Summary Form will not normally be considered a complete and proper recordation of the interview unless it includes, or is supplemented by the applicant or the examiner to include, all of the applicable items required below concerning the substance of the interview.

A complete and proper recordation of the substance of any interview should include at least the following applicable items:
1) A brief description of the nature of any exhibit shown or any demonstration conducted,
2) an identification of the claims discussed,
3) an identification of the specific prior art discussed,
4) an identification of the principal proposed amendments of a substantive nature discussed, unless these are already described on the Interview Summary Form completed by the Examiner,
5) a brief identification of the general thrust of the principal arguments presented to the examiner,
   (The identification of arguments need not be lengthy or elaborate. A verbatim or highly detailed description of the arguments is not required. The identification of the arguments is sufficient if the general nature or thrust of the principal arguments made to the examiner can be understood in the context of the application file. Of course, the applicant may desire to emphasize and fully describe those arguments which he or she feels were or might be persuasive to the examiner.)
6) a general indication of any other pertinent matters discussed, and
7) if appropriate, the general results or outcome of the interview unless already described in the Interview Summary Form completed by the examiner.

Examiners are expected to carefully review the applicant's record of the substance of an interview. If the record is not complete and accurate, the examiner will give the applicant an extendable one month time period to correct the record.

Examiner to Check for Accuracy

If the claims are allowable for other reasons of record, the examiner should send a letter setting forth the examiner's version of the statement attributed to him or her. If the record is complete and accurate, the examiner should place the indication, "Interview Record OK" on the paper recording the substance of the interview along with the date and the examiner's initials.

IN THE UNITED STATES PATENT AND TRADEMARK OFFICE

Art Unit	: 3714	**Customer No. 035811**
Examiner	: Adetokunbo Olusegun Torimiro	
Serial No.	: 14/275,136	Docket No.: COB-13-1044CIP3-CON
Filed	: May 12, 2014	
Inventor(s)	: Bernard J. Marantelli	Confirmation No.: 9997
Title	: WAGERING APPARATUS,	
	: METHODS AND SYSTEMS	Dated: March 25, 2015

SUPPLEMENTAL INFORMATION DISCLOSURE STATEMENT

Commissioner for Patents
P.O. Box 1450
Alexandria, VA 22313-1450

Sir:

The Applicant encloses Form PTO-1449 together with a copy of two (2) International Preliminary Reports on Patentability issued on March 10, 2015 in the corresponding international patent applications. The reports are submitted under 37 CFR §1.56 and are believed related to this application for the reasons stated.

Applicant certifies that the items of information contained in the Supplemental Information Disclosure Statement were first cited in any communication from any foreign patent office in a counterpart foreign application not more than three months ago.

The Applicant respectfully requests that this Supplemental Information Disclosure Statement be officially entered into the file and that appropriate notification be made that it was considered by the Examiner.

Respectfully submitted,

Paul A. Taufer
Reg. No. 35,703

PAT/nn
(215) 656-3385

EAST\96911806.1

Form PTO-1449 US DEPARTMENT OF COMMERCE PATENT AND TRADEMARK OFFICE	ATTY. DOCKET NO. COB-13-1044CIP3-CON	SERIAL NO. 14/275,136
	APPLICANT Bernard J. Marantelli	
LIST OF PUBLICATIONS CITED BY APPLICANT *(Use several sheets if necessary)*	FILING DATE May 12, 2014	GROUP

US PATENT DOCUMENTS

EXAMINER INITIAL*		DOCUMENT NUMBER	DATE	NAME	CLASS	SUBCLASS	FILING DATE IF APPROPRIATE
	AA						
	AB						
	AC						
	AD						
	AE						
	AF						
	AG						
	AH						
	AI						
	AJ						
	AK						

FOREIGN PATENT DOCUMENTS

		DOCUMENT NUMBER	DATE	COUNTRY	CLASS	SUBCLASS	TRANSLATION YES	TRANSLATION NO
	AL							
	AM							
	AN							
	AO							
	AP							

OTHER PUBLICATIONS (Including Author, Title, Date, Pertinent Pages, Etc.)

	AR	A copy of the International Preliminary Report on Patentability issued on March 10, 2015 in corresponding International Application No. PCT/IB2013/002962. A copy of the International Preliminary Report on Patentability issued on March 10, 2015 in corresponding International Application No. PCT/IB2013/002377.
	AS	
	AT	

EXAMINER	DATE CONSIDERED

*EXAMINER: Initial if publication considered, whether or not citation is in conformance with MPEP 609; Draw line through citation if not in conformance and not considered. Include copy of this form with next communication to Applicant.

3/20/15

PATENT COOPERATION TREATY

PCT

INTERNATIONAL PRELIMINARY REPORT ON PATENTABILITY

(Chapter I of the Patent Cooperation Treaty)

(PCT Rule 44*bis*)

Applicant's or agent's file reference 28102PC1-ERG	**FOR FURTHER ACTION**	See item 4 below
International application No. PCT/IB2013/002962	International filing date *(day/month/year)* 20 August 2013 (20.08.2013)	Priority date *(day/month/year)* 06 September 2012 (06.09.2012)
International Patent Classification (8th edition unless older edition indicated) See relevant information in Form PCT/ISA/237		
Applicant DIOGENES LIMITED		

1. This international preliminary report on patentability (Chapter I) is issued by the International Bureau on behalf of the International Searching Authority under Rule 44 *bis*.1(a).

2. This REPORT consists of a total of 5 sheets, including this cover sheet.

   In the attached sheets, any reference to the written opinion of the International Searching Authority should be read as a reference to the international preliminary report on patentability (Chapter I) instead.

3. This report contains indications relating to the following items:

☒	Box No. I	Basis of the report
☐	Box No. II	Priority
☐	Box No. III	Non-establishment of opinion with regard to novelty, inventive step and industrial applicability
☐	Box No. IV	Lack of unity of invention
☒	Box No. V	Reasoned statement under Article 35(2) with regard to novelty, inventive step or industrial applicability; citations and explanations supporting such statement
☐	Box No. VI	Certain documents cited
☐	Box No. VII	Certain defects in the international application
☐	Box No. VIII	Certain observations on the international application

4. The International Bureau will communicate this report to designated Offices in accordance with Rules 44*bis*.3(c) and 93*bis*.1 but not, except where the applicant makes an express request under Article 23(2), before the expiration of 30 months from the priority date (Rule 44*bis* .2).

	Date of issuance of this report 10 March 2015 (10.03.2015)
The International Bureau of WIPO 34, chemin des Colombettes 1211 Geneva 20, Switzerland Facsimile No. +41 22 338 82 70	Authorized officer Cécile Chatel e-mail: ro.ib@wipo.int

Form PCT/IB/373 (January 2004)

PATENT COOPERATION TREATY

From the
INTERNATIONAL SEARCHING AUTHORITY

To:

see form PCT/ISA/220

PCT

WRITTEN OPINION OF THE
INTERNATIONAL SEARCHING AUTHORITY
(PCT Rule 43*bis*.1)

Date of mailing
(day/month/year) see form PCT/ISA/210 (second sheet)

Applicant's or agent's file reference
see form PCT/ISA/220

FOR FURTHER ACTION
See paragraph 2 below

International application No.	International filing date *(day/month/year)*	Priority date *(day/month/year)*
PCT/IB2013/002962	20.08.2013	06.09.2012

International Patent Classification (IPC) or both national classification and IPC
INV. G07F17/32 G06Q50/34

Applicant
DIOGENES LIMITED

1. This opinion contains indications relating to the following items:

- ☒ Box No. I Basis of the opinion
- ☐ Box No. II Priority
- ☐ Box No. III Non-establishment of opinion with regard to novelty, inventive step and industrial applicability
- ☐ Box No. IV Lack of unity of invention
- ☒ Box No. V Reasoned statement under Rule 43*bis*.1(a)(i) with regard to novelty, inventive step and industrial applicability; citations and explanations supporting such statement
- ☐ Box No. VI Certain documents cited
- ☐ Box No. VII Certain defects in the international application
- ☐ Box No. VIII Certain observations on the international application

2. **FURTHER ACTION**

If a demand for international preliminary examination is made, this opinion will usually be considered to be a written opinion of the International Preliminary Examining Authority ("IPEA") except that this does not apply where the applicant chooses an Authority other than this one to be the IPEA and the chosen IPEA has notifed the International Bureau under Rule 66.1*bis*(b) that written opinions of this International Searching Authority will not be so considered.

If this opinion is, as provided above, considered to be a written opinion of the IPEA, the applicant is invited to submit to the IPEA a written reply together, where appropriate, with amendments, before the expiration of 3 months from the date of mailing of Form PCT/ISA/220 or before the expiration of 22 months from the priority date, whichever expires later.

For further options, see Form PCT/ISA/220.

Name and mailing address of the ISA:	Date of completion of this opinion	Authorized Officer
European Patent Office P.B. 5818 Patentlaan 2 NL-2280 HV Rijswijk - Pays Bas Tel. +31 70 340 - 2040 Fax: +31 70 340 - 3016	see form PCT/ISA/210	Bassanini, Anna Telephone No. +31 70 340-2036

Form PCT/ISA/237 (Cover Sheet) (July 2009)

Box No. I Basis of the opinion

1. With regard to the **language**, this opinion has been established on the basis of:

   ☒ the international application in the language in which it was filed

   ☐ a translation of the international application into , which is the language of a translation furnished for the purposes of international search (Rules 12.3(a) and 23.1 (b)).

2. ☐ This opinion has been established taking into account the **rectification of an obvious mistake** authorized by or notified to this Authority under Rule 91 (Rule 43bis.1(a))

3. With regard to any **nucleotide and/or amino acid sequence** disclosed in the international application, this opinion has been established on the basis of a sequence listing filed or furnished:

   a. (means)

   ☐ on paper

   ☐ in electronic form

   b. (time)

   ☐ in the international application as filed

   ☐ together with the international application in electronic form

   ☐ subsequently to this Authority for the purposes of search

4. ☐ In addition, in the case that more than one version or copy of a sequence listing has been filed or furnished, the required statements that the information in the subsequent or additional copies is identical to that in the application as filed or does not go beyond the application as filed, as appropriate, were furnished.

5. Additional comments:

Box No. V Reasoned statement under Rule 43*bis*.1(a)(i) with regard to novelty, inventive step or industrial applicability; citations and explanations supporting such statement

1. Statement

Novelty (N)	Yes:	Claims	1-30
	No:	Claims	
Inventive step (IS)	Yes:	Claims	
	No:	Claims	1-30
Industrial applicability (IA)	Yes:	Claims	1-30
	No:	Claims	

2. Citations and explanations

   see separate sheet

Re Item V

Reasoned statement with regard to novelty, inventive step or industrial applicability; citations and explanations supporting such statement

1 The claimed subject matter, with due regard to the description and drawings, relates to processes comprised in the list of subject matter and activities for which no search is required under Rule 39 PCT.

The only identifiable technical aspects of the claimed invention are deemed to relate to the use of conventional, general-purpose data processing technology. The information technology employed is considered to have been generally known as it was widely available to everyone at the date of priority of the present application. The notoriety of such prior art cannot reasonably be contested, and no documentary evidence was therefore considered required.

2 Claims 1-30 of the application, although not completely devoid of technical character, are thus regarded as merely specifying commonplace features relating to a technological implementation of subject matter for which no search is required under Rule 39 PCT, without involving an inventive step (Article 33(3) PCT). No technical solution defined in response to a problem could be identified within the content of the application as originally filed. Any problems which are addressed do not appear to require a technical, but rather an administrative or organisational, i.e. business, solution. Whilst the implementation of such solutions may include the use of generic technical features, these merely serve their well known functions as would be recognised by the skilled person in the technical field under consideration.

2.1 The subject-matter of this application relates to wagering. This is *per se* a non-technical aspect, for which no search is required under Rule 39 PCT.

2.2 The problem being addressed resides in creating new wagering products to generate and maintain consumer interest (see the description, page 1, l. 31-32). This problem is also non technical.

2.3 The solution proposed by the present application consists of creating a unique betting product where players make selections in a number of different "legs" including a variety of events. Players winning at least one leg are eligible to win a jackpot. Before the multi-wagering event is completed, buy-out offers to the players who are eligible to win the jackpot can be initiated. If those players accept, they will not be eligible to win a final jackpot. Partial buy-out offers can

also be made, whereby accepting players will be eligible to win portions of the jackpots. This solution is *per se* a gaming and business, i.e. non-technical scheme.

2.4 The implementation of this solution as proposed in the present application is a mere automation of the above mentioned non-technical scheme. The person skilled in the art, made aware of the administrative method, guided by the constraints implied by this method, would implement it without the exercise of an inventive activity. No technical problem has been convincingly laid out and none is apparent to the person skilled in the art from reading the current application. Therefore, the problem dealt with is non-technical. The only technical aspect that is present is the use of a computer system for implementing the basic administrative task. However, the feature of executing this method on a computer system does not go beyond the basic computer functions associated with the implementation of any administrative task on a computer system which are standard technology and form part of the general knowledge of the skilled person in the art. When analysing the application, the examiner was unable to discover any technical details that go beyond mentioning at a very high level the presence of a networked computer system and ordinary data processing. It is also noted that no further technical effect can be seen in the implementation of this administrative method.

2.5 The defined subject-matter accordingly lacks inventive step, as no technical solution to a realised technical problem has been proposed and no technical effect or result which would be unexpected or surprising to the person skilled in the art is apparent.

2.6 The person skilled in the art, with general knowledge of the technical field and normal access to examples and textbooks, would apply the measures as described in the present application and defined in its claims without the use of inventive skill to arrive at the desired result. As noted in section 1 of this communication, the examiner does not find it necessary at present to refer to any particular art in support of this view due to the paucity of technical definition going beyond the everyday for the person skilled in the technical art.

3/20/15

PATENT COOPERATION TREATY

PCT

INTERNATIONAL PRELIMINARY REPORT ON PATENTABILITY

(Chapter I of the Patent Cooperation Treaty)

(PCT Rule 44*bis*)

Applicant's or agent's file reference 28099PC1-ERG	**FOR FURTHER ACTION**	See item 4 below
International application No. PCT/IB2013/002377	International filing date *(day/month/year)* 19 August 2013 (19.08.2013)	Priority date *(day/month/year)* 06 September 2012 (06.09.2012)
International Patent Classification (8th edition unless older edition indicated) See relevant information in Form PCT/ISA/237		
Applicant DIOGENES LIMITED		

1. This international preliminary report on patentability (Chapter I) is issued by the International Bureau on behalf of the International Searching Authority under Rule 44 *bis*.1(a).

2. This REPORT consists of a total of 8 sheets, including this cover sheet.

   In the attached sheets, any reference to the written opinion of the International Searching Authority should be read as a reference to the international preliminary report on patentability (Chapter I) instead.

3. This report contains indications relating to the following items:

☒	Box No. I	Basis of the report
☐	Box No. II	Priority
☐	Box No. III	Non-establishment of opinion with regard to novelty, inventive step and industrial applicability
☐	Box No. IV	Lack of unity of invention
☒	Box No. V	Reasoned statement under Article 35(2) with regard to novelty, inventive step or industrial applicability; citations and explanations supporting such statement
☒	Box No. VI	Certain documents cited
☐	Box No. VII	Certain defects in the international application
☐	Box No. VIII	Certain observations on the international application

4. The International Bureau will communicate this report to designated Offices in accordance with Rules 44*bis*.3(c) and 93*bis*.1 but not, except where the applicant makes an express request under Article 23(2), before the expiration of 30 months from the priority date (Rule 44*bis* .2).

	Date of issuance of this report 10 March 2015 (10.03.2015)
The International Bureau of WIPO 34, chemin des Colombettes 1211 Geneva 20, Switzerland Facsimile No. +41 22 338 82 70	Authorized officer Cécile Chatel e-mail: ro.ib@wipo.int

Form PCT/IB/373 (January 2004)

PATENT COOPERATION TREATY

From the:
INTERNATIONAL SEARCHING AUTHORITY

To:

DLA PIPER LLP (US)
One Liberty Place
1650 Market Street, Suite 4900
Philadelphia, PA 19103
US

PCT

WRITTEN OPINION OF THE
INTERNATIONAL SEARCHING AUTHORITY

(PCT Rule 43*bis*.1)

Date of mailing *(day/month/year)*
24 January 2014

Applicant's or agent's file reference

FOR FURTHER ACTION
See paragraph 2 below

International application No.	International filing date *(day/month/year)*	Priority date *(day/month/year)*
PCT/IB2013/002377	19 August 2013	02 August 2013

International Patent Classification (IPC) or both national classification and IPC
G06Q 50/34 (2012.01)

Applicant
MARANTELLI, Bernard J.

1. This opinion contains indications relating to the following items:

- [X] Box No. I — Basis of the opinion
- [X] Box No. II — Priority
- [ ] Box No. III — Non-establishment of opinion with regard to novelty, inventive step and industrial applicability
- [ ] Box No. IV — Lack of unity of invention
- [X] Box No. V — Reasoned statement under Rule 43*bis*.1(a)(i) with regard to novelty, inventive step and industrial applicability; citations and explanations supporting such statement
- [X] Box No. VI — Certain documents cited
- [ ] Box No. VII — Certain defects in the international application
- [ ] Box No. VIII — Certain observations on the international application

2. **FURTHER ACTION**

If a demand for international preliminary examination is made, this opinion will be considered to be a written opinion of the International Preliminary Examining Authority ("IPEA") except that this does not apply where the applicant chooses an Authority other than this one to be the IPEA and the chosen IPEA has notified the International Bureau under Rule 66.1*bis*(b) that written opinions of this International Searching Authority will not be so considered.

If this opinion is, as provided above, considered to be a written opinion of the IPEA, the applicant is invited to submit to the IPEA a written reply together, where appropriate, with amendments, before the expiration of 3 months from the date of mailing of Form PCT/ISA/220 or before the expiration of 22 months from the priority date, whichever expires later.

For further options, see Form PCT/ISA/220.

Name and mailing address of the ISA	Date of completion of this opinion	**Authorised Officer**
AUSTRALIAN PATENT OFFICE PO BOX 200, WODEN ACT 2606, AUSTRALIA Email address: pct@ipaustralia.gov.au Facsimile No. +61 2 6283 7999	24 January 2014	Boris Cetinich AUSTRALIAN PATENT OFFICE (ISO 9001 Quality Certified Service) Telephone No. 0399359619

WRITTEN OPINION OF THE INTERNATIONAL SEARCHING AUTHORITY

International application No.

PCT/IB2013/002377

Box No. I **Basis of this opinion**

1. With regard to the **language,** this opinion has been established on the basis of:

   [X] The international application in the language in which it was filed

   [ ] A translation of the international application into, , which is the language of a translation furnished for the purposes of international search (under Rules 12.3(a) and 23.1(b)).

2. [ ] This opinion has been established taking into account **the rectification of an obvious mistake** authorized by or notified to this Authority under Rule 91 (Rule 43*bis*.1(a))

3. With regard to any **nucleotide and/or amino acid sequence** disclosed in the international application, this opinion has been established on the basis of a sequence listing filed or furnished:

   a. (means)

   [ ] on paper

   [ ] in electronic form

   b. (time)

   [ ] in the international application as filed

   [ ] together with the international application in electronic form

   [ ] subsequently to this Authority for the purposes of search

4. [ ] In addition, in the case that more than one version or copy of a sequence listing has been filed or furnished, the required statements that the information in the subsequent or additional copies is identical to that in the application as filed or does not go beyond the application as filed, as appropriate, were furnished.

5. Additional comments:

WRITTEN OPINION OF THE INTERNATIONAL SEARCHING AUTHORITY

International application No.

PCT/IB2013/002377

Box No. II Priority

1. [X] The validity of the priority claim has not been considered because the International Searching Authority does not have in its possession a copy of the earlier application whose priority has been claimed or, where required, a translation of that earlier application. This opinion has nevertheless been established on the assumption that the relevant date (Rules 43*bis*.1 and 64.1) is the claimed priority date.

2. [ ] This opinion has been established as if no priority had been claimed due to the fact that the priority claim has been found invalid (Rules 43*bis*.1 and 64.1). Thus for the purposes of this opinion, the international filing date indicated above is considered to be the relevant date.

3. Additional observations, if necessary:

WRITTEN OPINION OF THE INTERNATIONAL SEARCHING AUTHORITY	International Application No. PCT/IB2013/002377

Box No. V **Reasoned statement under Rule 43*bis*.1(a)(i) with regard to novelty, inventive step or industrial applicability; citations and explanations supporting such statement**

1. Statement

Novelty (N)	Claims **1-37**	**YES**
	Claims **NONE**	**NO**
Inventive step (IS)	Claims **1-37**	**YES**
	Claims **NONE**	**NO**
Industrial applicability (IA)	Claims **1-37**	**YES**
	Claims **NONE**	**NO**

2. CITATIONS AND EXPLANATIONS:

CITATIONS

D1: US 2006/0237905 A1 (NICELY et al.) 26 October 2006
D2: US 7,811,164 B1 (SLOMIANY et al.) 12 October 2010
D3: US 7,901,281 B2 (BRESLO) 08 March 2011

NOVELTY (N)

Claims 1, 2 and 29 meet the criteria set forth in PCT Article 33(2) for novelty. The cited prior art published before the priority date does not disclose, for example:
a wagering system including at least one wagering device for allowing the placement of a wager of a multi–leg event pool, the wagering system comprising:
a server system controller configured to communicate with the at least one wagering device, said server system controller programmed to:

- initiate a multi-leg event pool by the generation of a game having a series of events, the correct selection of the results of the series of the events results in the award of at least a portion of a jackpot, and accepting wagers on the multi–leg events from players,
- recognize when, after a set number of the events, there remain wagers having the potential of winning the jackpot,
- cause the display of a representation of a potion of the game results in a manner that indicates that a jackpot can result based on the outcome of the game,
- generate and cause the display of a full or partial buyout proposal, and
- issue at least one of a payment and a credit to the player if the proposal is accepted.

Appended claims 3-28 and 30-37 add further features to those defined in claim 1, 2 and 29, and are therefore also novel.

Therefore, the subject matter of these claims is new and meets the requirements of Article 33(2) of the PCT with regard to novelty.

INVENTIVE STEP (IS)

Claims 1, 2 and 29 meet the criteria set out in PCT Article 33(3) with regard to the requirement of inventive step because the cited prior art does not obviously suggest to a person skilled in the art:

a wagering system including at least one wagering device for allowing the placement of a wager of a multi–leg event pool, the wagering system comprising:
a server system controller configured to communicate with the at least one wagering device, said server system controller programmed to:

- initiate a multi-leg event pool by the generation of a game having a series of events, the correct selection of the results of the series of the events results in the award of at least a portion of a jackpot, and accepting wagers on the multi–leg events from players,
- recognize when, after a set number of the events, there remain wagers having the potential of winning the jackpot,
- cause the display of a representation of a potion of the game results in a manner that indicates that a jackpot can result based on the outcome of the game,
- generate and cause the display of a full or partial buyout proposal, and

- issue at least one of a payment and a credit to the player if the proposal is accepted.

Claims 3-28 and 30-37 embody further aspects of the inventive concept and therefore also meet the requirements of Article 33(3) of the PCT.

Therefore, the subject matter of these claims is not obvious and meets the requirements of Article 33(3) of the PCT with regard to inventive step.

INDUSTRIAL APPLICABILITY (IA)

The invention defined in the claims 1-37 is considered to meet the requirements of industrial applicability under Article 33(4) of the PCT because it can be made by, or used in, industry.

E Category Document/s listed in Box VI:

There is a document(s) listed as an E category document in Box VI because it:

- discloses subject matter that is of particular relevance to this application and
- is an earlier application or patent but published on or after the international filing date of this application

Under the PCT, only documents published before the priority date of the instant application can deprive the claims of that application of novelty.

However, the relevance of a document published after the priority date of the application under consideration is dependent on national law in individual countries.

E category document/s may become significant in the National Phase.

WRITTEN OPINION OF THE INTERNATIONAL SEARCHING AUTHORITY **Box No. VI** **Certain documents cited**	International Application No. **PCT/IB2013/002377**

1. Certain published documents (Rules 43*bis*.1 and 70.10)

Application No. Patent No.	Publication date *(day/month/year)*	Filing date *(day/month/year)*	Priority date (valid claim) *(day/month/year)*
E : US 8,602,884 B1	10 December 2013	06 September 2012	06 September 2012

See Supplemental Box for Details

2. Non-written disclosures (Rules 43*bis*.1 and 70.9)

Kind of non-written disclosure	Date of non-written disclosure *(day/month/year)*	Date of written disclosure referring to non-written disclosure *(day/month/year)*

Continuation of: **Box VI**

It would appear the present application derives basis from the cited document. The present application has a priority date of 2 August 2013 and an international application date of 19 August 2013, while the cited document claims priority 6 of September 2012.

Hence, this document may be considered relevant in certain jurisdictions.

Electronic Acknowledgement Receipt

EFS ID:	21874422
Application Number:	14275136
International Application Number:	
Confirmation Number:	9997
Title of Invention:	WAGERING APPARATUS, METHODS AND SYSTEMS
First Named Inventor/Applicant Name:	Bernard J. Marantelli
Customer Number:	35811
Filer:	Paul A. Taufer/Nancy Nunez
Filer Authorized By:	Paul A. Taufer
Attorney Docket Number:	COB-13-1044CIP3-CON
Receipt Date:	25-MAR-2015
Filing Date:	12-MAY-2014
Time Stamp:	14:17:52
Application Type:	Utility under 35 USC 111(a)

Payment information:

Submitted with Payment	no

File Listing:

Document Number	Document Description	File Name	File Size(Bytes)/ Message Digest	Multi Part /.zip	Pages (if appl.)
1		SIDSIPRPs.pdf	311638 cbd1e06dbfdb56b92f300ed9e5c486771ba13718	yes	2

	Multipart Description/PDF files in .zip description		
	Document Description	**Start**	**End**
	Information Disclosure Statement (IDS) Form (SB08)	1	1
	Information Disclosure Statement (IDS) Form (SB08)	2	2

Warnings:					
Information:					
2	Other Reference-Patent/App/Search documents	IPRP1.pdf	212469 0d7966ee179033c2f3b2191b262c242e251c4356	no	5
Warnings:					
Information:					
3	Other Reference-Patent/App/Search documents	IPRP2.pdf	241917 ddd1cc47865005f9dd97a34cdd941150d48d5571	no	8
Warnings:					
Information:					
		Total Files Size (in bytes):	766024		

This Acknowledgement Receipt evidences receipt on the noted date by the USPTO of the indicated documents, characterized by the applicant, and including page counts, where applicable. It serves as evidence of receipt similar to a Post Card, as described in MPEP 503.

<u>New Applications Under 35 U.S.C. 111</u>
If a new application is being filed and the application includes the necessary components for a filing date (see 37 CFR 1.53(b)-(d) and MPEP 506), a Filing Receipt (37 CFR 1.54) will be issued in due course and the date shown on this Acknowledgement Receipt will establish the filing date of the application.

<u>National Stage of an International Application under 35 U.S.C. 371</u>
If a timely submission to enter the national stage of an international application is compliant with the conditions of 35 U.S.C. 371 and other applicable requirements a Form PCT/DO/EO/903 indicating acceptance of the application as a national stage submission under 35 U.S.C. 371 will be issued in addition to the Filing Receipt, in due course.

<u>New International Application Filed with the USPTO as a Receiving Office</u>
If a new international application is being filed and the international application includes the necessary components for an international filing date (see PCT Article 11 and MPEP 1810), a Notification of the International Application Number and of the International Filing Date (Form PCT/RO/105) will be issued in due course, subject to prescriptions concerning national security, and the date shown on this Acknowledgement Receipt will establish the international filing date of the application.

UNITED STATES PATENT AND TRADEMARK OFFICE

UNITED STATES DEPARTMENT OF COMMERCE
United States Patent and Trademark Office
Address: COMMISSIONER FOR PATENTS
P.O. Box 1450
Alexandria, Virginia 22313-1450
www.uspto.gov

APPLICATION NO.	FILING DATE	FIRST NAMED INVENTOR	ATTORNEY DOCKET NO.	CONFIRMATION NO.
14/275,136	05/12/2014	Bernard J. Marantelli	COB-13-1044CIP3-CON	9997

35811 7590 03/12/2015
IP GROUP OF DLA PIPER LLP (US)
ONE LIBERTY PLACE
1650 MARKET ST, SUITE 4900
PHILADELPHIA, PA 19103

EXAMINER
TORIMIRO, ADETOKUNBO OLUSEGUN

ART UNIT	PAPER NUMBER
3714	

NOTIFICATION DATE	DELIVERY MODE
03/12/2015	ELECTRONIC

Please find below and/or attached an Office communication concerning this application or proceeding.

The time period for reply, if any, is set in the attached communication.

Notice of the Office communication was sent electronically on above-indicated "Notification Date" to the following e-mail address(es):

pto.phil@dlapiper.com

Office Action Summary	Application No. 14/275,136	Applicant(s) MARANTELLI, BERNARD J.	
	Examiner ADETOKUNBO O. TORIMIRO	Art Unit 3714	AIA (First Inventor to File) Status No

-- The MAILING DATE of this communication appears on the cover sheet with the correspondence address --

Period for Reply

A SHORTENED STATUTORY PERIOD FOR REPLY IS SET TO EXPIRE 3 MONTHS FROM THE MAILING DATE OF THIS COMMUNICATION.

- Extensions of time may be available under the provisions of 37 CFR 1.136(a). In no event, however, may a reply be timely filed after SIX (6) MONTHS from the mailing date of this communication.
- If NO period for reply is specified above, the maximum statutory period will apply and will expire SIX (6) MONTHS from the mailing date of this communication.
- Failure to reply within the set or extended period for reply will, by statute, cause the application to become ABANDONED (35 U.S.C. § 133). Any reply received by the Office later than three months after the mailing date of this communication, even if timely filed, may reduce any earned patent term adjustment. See 37 CFR 1.704(b).

Status

1)☒ Responsive to communication(s) filed on 12/18/2014.

☐ A declaration(s)/affidavit(s) under **37 CFR 1.130(b)** was/were filed on _____.

2a)☐ This action is **FINAL**. 2b)☒ This action is non-final.

3)☐ An election was made by the applicant in response to a restriction requirement set forth during the interview on _____; the restriction requirement and election have been incorporated into this action.

4)☐ Since this application is in condition for allowance except for formal matters, prosecution as to the merits is closed in accordance with the practice under *Ex parte Quayle*, 1935 C.D. 11, 453 O.G. 213.

Disposition of Claims*

5)☒ Claim(s) 1-40 is/are pending in the application.

5a) Of the above claim(s) _____ is/are withdrawn from consideration.

6)☐ Claim(s) _____ is/are allowed.

7)☒ Claim(s) 1-40 is/are rejected.

8)☐ Claim(s) _____ is/are objected to.

9)☐ Claim(s) _____ are subject to restriction and/or election requirement.

* If any claims have been determined allowable, you may be eligible to benefit from the **Patent Prosecution Highway** program at a participating intellectual property office for the corresponding application. For more information, please see http://www.uspto.gov/patents/init_events/pph/index.jsp or send an inquiry to PPHfeedback@uspto.gov.

Application Papers

10)☐ The specification is objected to by the Examiner.

11)☐ The drawing(s) filed on _____ is/are: a)☐ accepted or b)☐ objected to by the Examiner.

Applicant may not request that any objection to the drawing(s) be held in abeyance. See 37 CFR 1.85(a).

Replacement drawing sheet(s) including the correction is required if the drawing(s) is objected to. See 37 CFR 1.121(d).

Priority under 35 U.S.C. § 119

12)☐ Acknowledgment is made of a claim for foreign priority under 35 U.S.C. § 119(a)-(d) or (f).

Certified copies:

a)☐ All b)☐ Some** c)☐ None of the:

1.☐ Certified copies of the priority documents have been received.

2.☐ Certified copies of the priority documents have been received in Application No. _____.

3.☐ Copies of the certified copies of the priority documents have been received in this National Stage application from the International Bureau (PCT Rule 17.2(a)).

** See the attached detailed Office action for a list of the certified copies not received.

Attachment(s)

1) ☐ Notice of References Cited (PTO-892)

2) ☐ Information Disclosure Statement(s) (PTO/SB/08a and/or PTO/SB/08b) Paper No(s)/Mail Date _____.

3) ☐ Interview Summary (PTO-413) Paper No(s)/Mail Date. _____ .

4) ☐ Other: _____.

1. The present application is being examined under the pre-AIA first to invent provisions.

2. The Applicant's Terminal Disclaimers received on 12/18/2014 have been considered and approved. The applicant's arguments and amendment received on 12/18/2014 has been considered. It is noted that claim 10 has been amended.

DETAILED ACTION

Claim Rejections - 35 USC § 101

3. 35 U.S.C. 101 reads as follows:

> Whoever invents or discovers any new and useful process, machine, manufacture, or composition of matter, or any new and useful improvement thereof, may obtain a patent therefor, subject to the conditions and requirements of this title.

4. Claims 1-40 are rejected under 35 U.S.C. 101 because the claimed invention is directed to non-statutory subject matter. The claimed invention is directed to a judicial exception (i.e., a law of nature, a natural phenomenon, or an abstract idea) without significantly more. Claims 1, 25, 31, and 36 are directed towards a wagering event with buy-out offer. The claims recite method steps for providing the wagering event buy-out offer. The methods are implemented on with wagering input devices. The methods require initiating the wagering event, receive the wager from the player, identifying player eligible to win, providing buy-out offer to the player, identifying if the offers are accepted, and determining winning players.

5. Managing a wagering event as recited in these claims can be performed mentally, without a computer or in a computer and is similar to the kind of "organizing human activity" identified as abstract by the courts. Moreover, the wagering event with buy-out offer represents merely exchanging financial obligations between a player and a casino (or house, book-maker, etc.,) it is also similar to the "fundamental economic practices" identified as abstract by the courts. Claims

1, 25, 31, and 36 describe managing wagering event and therefore are directed towards an abstract idea.

6. Claims 1, 25, 31, and 36 are drawn to additional limitations of a wagering input devices, system controllers, GUI and data storage but do not include additional elements that are sufficient to amount to significantly more than the judicial exception. These generic computer components are claimed to perform their basic functions including managing or implementing the wagering event electronically and over a network.

7. The recitations of computers and electronic limitations amount to mere instructions to implement the abstract idea on a computer device. Taking the additional elements individually and in combination, the computer components perform purely generic computer functions. As such, there is no inventive concept sufficient to transform the claimed subject matter into a patent-eligible application. The claims do not amount to significantly more than the abstract idea itself. Accordingly, the claims are not patent-eligible.

Response to Arguments

8. Applicant's arguments, see pages 12 and 13 of the Applicant Argument/remark, filed 12/18/2014, with respect to the rejection(s) of claim(s) 1-40 under 35 USC 112, Obviousness Double Patenting, and 35 USC 102(b) have been fully considered and are persuasive. Therefore, the rejection has been withdrawn. However, upon further consideration, a new ground(s) of rejection is made in view of the recent 35 USC 101 Alice court decision specifically with reference to the abstract limitations in the Applicant's claims as explained above.

Conclusion

9. Any inquiry concerning this communication or earlier communications from the examiner should be directed to ADETOKUNBO O. TORIMIRO whose telephone number is (571)270-1345. The examiner can normally be reached on Mon-Fri (8am - 4pm).

If attempts to reach the examiner by telephone are unsuccessful, the examiner's supervisor, David L. Lewis can be reached on (571)272-7673. The fax phone number for the organization where this application or proceeding is assigned is 571-273-8300.

Information regarding the status of an application may be obtained from the Patent Application Information Retrieval (PAIR) system. Status information for published applications may be obtained from either Private PAIR or Public PAIR. Status information for unpublished applications is available through Private PAIR only. For more information about the PAIR system, see http://pair-direct.uspto.gov. Should you have questions on access to the Private PAIR system, contact the Electronic Business Center (EBC) at 866-217-9197 (toll-free). If you would like assistance from a USPTO Customer Service Representative or access to the automated information system, call 800-786-9199 (IN USA OR CANADA) or 571-272-1000.

/ADETOKUNBO O TORIMIRO/
Primary Examiner, Art Unit 3714

Index of Claims	Application/Control No.	Applicant(s)/Patent Under Reexamination
	14275136	MARANTELLI, BERNARD J.
	Examiner	**Art Unit**
	ADETOKUNBO O TORIMIRO	3714

✓	Rejected	-	Cancelled	N	Non-Elected	A	Appeal
=	Allowed	÷	Restricted	I	Interference	O	Objected

☐ Claims renumbered in the same order as presented by applicant ☐ CPA ☐ T.D. ☐ R.1.47

CLAIM		DATE								
Final	Original	09/18/2014	03/05/2015							
	1	✓	✓							
	2	✓	✓							
	3	✓	✓							
	4	✓	✓							
	5	✓	✓							
	6	✓	✓							
	7	✓	✓							
	8	✓	✓							
	9	✓	✓							
	10	✓	✓							
	11	✓	✓							
	12	✓	✓							
	13	✓	✓							
	14	✓	✓							
	15	✓	✓							
	16	✓	✓							
	17	✓	✓							
	18	✓	✓							
	19	✓	✓							
	20	✓	✓							
	21	✓	✓							
	22	✓	✓							
	23	✓	✓							
	24	✓	✓							
	25	✓	✓							
	26	✓	✓							
	27	✓	✓							
	28	✓	✓							
	29	✓	✓							
	30	✓	✓							
	31	✓	✓							
	32	✓	✓							
	33	✓	✓							
	34	✓	✓							
	35	✓	✓							
	36	✓	✓							

Index of Claims	Application/Control No.	Applicant(s)/Patent Under Reexamination
	14275136	MARANTELLI, BERNARD J.
	Examiner	**Art Unit**
	ADETOKUNBO O TORIMIRO	3714

✓	Rejected	-	Cancelled	N	Non-Elected	A	Appeal
=	Allowed	÷	Restricted	I	Interference	O	Objected

☐ Claims renumbered in the same order as presented by applicant ☐ CPA ☐ T.D. ☐ R.1.47

CLAIM		DATE								
Final	Original	09/18/2014	03/05/2015							
	37	✓	✓							
	38	✓	✓							
	39	✓	✓							
	40	✓	✓							

EAST Search History

EAST Search History (Prior Art)

Ref #	Hits	Search Query	DBs	Default Operator	Plurals	Time Stamp
L1	20787	wager$3 (event or gam$3)	US-PGPUB; USPAT	SAME	ON	2015/03/05 15:41
L2	12313	wager$3 adj (event or gam$3)	US-PGPUB; USPAT	SAME	ON	2015/03/05 15:41
L3	11	wager$3 adj (event or gam$3) buy adj out	US-PGPUB; USPAT	SAME	ON	2015/03/05 15:41
L4	24	wager$3 adj (event or gam$3) and buy adj out	US-PGPUB; USPAT	SAME	ON	2015/03/05 15:41
L5	12	wager$3 adj (event or gam$3) and (partial or portion) buy adj out	US-PGPUB; USPAT	SAME	ON	2015/03/05 15:42
L6	10	marantelli.in.	US-PGPUB; USPAT	SAME	ON	2015/03/05 15:42

3/5/2015 3:43:10 PM

Search Notes	Application/Control No.	Applicant(s)/Patent Under Reexamination
	14275136	MARANTELLI, BERNARD J.
	Examiner	**Art Unit**
	ADETOKUNBO O TORIMIRO	3714

CPC- SEARCHED		
Symbol	**Date**	**Examiner**
G07F3244,3255 (in combination with text search)	3/5/2015	AT
G07F17/32,3225,3293 (in combination with text search)	3/5/2015	AT
G07F17/323,3262 (in combination with text search)	3/5/2015	AT
A63F9/24, A63F13/00 (in combination with text search)	9/18/2014	AT

CPC COMBINATION SETS - SEARCHED		
Symbol	**Date**	**Examiner**

US CLASSIFICATION SEARCHED			
Class	**Subclass**	**Date**	**Examiner**
463	20,22,25,28,40,42	3/5/2015	AT

SEARCH NOTES		
Search Notes	**Date**	**Examiner**
-Inventor Name Search	3/5/2015	AT
-Assignee Search	3/5/2015	AT
-East Text Search	3/5/2015	AT
-Plus Search	3/5/2015	AT
-Backward/Forward Search	3/5/2015	AT

INTERFERENCE SEARCH			
US Class/ CPC Symbol	**US Subclass / CPC Group**	**Date**	**Examiner**

/ADETOKUNBO O TORIMIRO/ Examiner.Art Unit 3714	

Application Number	Application/Control No.	Applicant(s)/Patent under Reexamination	
	14/275,136	MARANTELLI, BERNARD J.	

Document Code - DISQ	Internal Document – DO NOT MAIL

TERMINAL DISCLAIMER	☒ APPROVED	☐ DISAPPROVED
Date Filed : 12/18/14	This patent is subject to a Terminal Disclaimer	

Approved/Disapproved by:

Janice Ford

2 tds approved

U.S. Patent and Trademark Office

IN THE UNITED STATES PATENT AND TRADEMARK OFFICE

Art Unit	: 3714	**Customer No. 035811**
Examiner	: Torimiro, A. O.	
Serial No.	: 14/275,136	Docket No.: COB-13-1044CIP3-CON
Filed	: May 12, 2014	
Inventor(s)	: Bernard J. Marantelli	Confirmation No.: 9997
Title	: WAGERING APPARATUS,	
	: METHODS AND SYSTEMS	Dated: December 18, 2014

RESPONSE

Mail Stop Amendment
Commissioner for Patents
P.O. Box 1450
Alexandria, VA 22313-1450

Sir:

In response to the Official Action dated September 23, 2014, the Applicant amends the application as follows:

In the Claims

1. (Original) A method of conducting a wagering event for one or more players, wherein a player is presented with at least one of a buy-out offer and a partial buy-out offer prior to completion of the wagering event, the method comprising the steps of:

providing one or more wagering input devices in communication with a system controller through which one or more players may participate in a wagering event, said system controller being adapted for:

initiating the wagering event for one or more players;

receiving a wager via the one or more wagering input devices in response to a player desiring to participate in the wagering event;

identifying one or more players eligible to win from among players participating in the wagering event;

initiating at least one of a buy-out offer and partial buy-out offer to any number of the one or more players that are eligible to win, said buy-out offer or partial buy-out offer being initiated at any time before the wagering event has been completed;

identifying any acceptances of said at least one of a buy-out offer and partial buy-out offer that have been initiated;

completing the wagering event; and

determining if any of the players have won.

2. (Original) The method of claim 1, wherein the one or more players are eligible to win an award comprising one or more selected from the group consisting of monetary awards, nonmonetary awards, a prize, a payment, a designated currency, virtual currency, tokens, credits, coupons, services, personal property, real property, virtual property, assets, investments, negotiable instruments, commodities, food, lodging, entertainment, alleviation of obligations, gaming opportunities and wager enhancement.

3. (Original) The method of claim 1, wherein identifying any acceptances of said at least one of a buy-out offer and partial buy-out offer further comprises that each of the players accepting the buy-

out offer will no longer be eligible to at least exclusively win an award, wherein each of the players not accepting the buy-out offer will remain eligible to win an award, and wherein each of the players accepting a partial buy-out offer remains eligible to win at least a portion of an award.

4. (Original) The method of claim 1, wherein each the wagering event comprises one or more selected from the group consisting of sporting events, lotteries, real games and virtual games, and wherein the wager comprises a potential outcome.

5. (Original) The method of claim 4, wherein the wager is one or more of selectable by being handpicked by the player, provided electronically on request of the player through communication between the one or more wagering input devices and the system controller, provided via a random number generator associated with the system controller, a quick pick or a smart pick.

6. (Original) The method of claim 4, wherein the games comprise one or more selected from the group consisting of slot machines, keno, poker, video games and racing.

7. (Original) The method of claim 1, wherein accepting a partial buy-out offer comprises a player accepting less than the buy-out offer amount, said acceptance resulting in the player remaining eligible to win at least a portion of at least one award.

8. (Original) The method of claim 1, wherein the buy-out offer is initiated on behalf of at least one of a third party and a player, and when a buy-out offer is accepted, the third party becomes eligible for winning at least a portion of an award.

9. (Original) The method of claim 1, wherein the system controller is further programmed to provide an award, or any fractional portion thereof, upon the completion of the wagering event.

10. (Currently Amended) The method of claim 1, wherein the ~~multi-outcome~~ wagering event comprises one or more virtual games, said method further comprising:

initiating the buy-out offer prior to completion of the one or more virtual games, but after an outcome of the one or more virtual games has been determined,

said buy-out offer including a price that is at least partially based on random-number-generated probabilities.

11. (Original) The method of claim 1, further comprising initiating a bidding process among a designated number of players interested in accepting at least one of a buy-out offer and partial buy-out offer, and closing the bidding process after a certain span of time or after a certain number of the buy-out and partial buy-out offers have been accepted.

12. (Original) The method of claim 1, wherein one or more interim awards are awarded prior to completion of the wagering event.

13. (Original) The method of claim 1, further comprising awarding at least one consolation award where a consolation scenario is won, and wherein said consolation scenario comprises finishing within a predetermined position of a corresponding winner.

14. (Original) The method of claim 13, wherein there is a span of time before the wagering event is completed, and the wagering event is completed in a live or pre-recorded event attended by the players eligible to win an award, a portion thereof, or a bonus prize.

15. (Original) The method of claim 14, further comprising initiating a buy-back offer, prior to the wagering event being completed, to at least one player eligible to win the award, the portion thereof, or the bonus, said buy-back offer being for a portion of an entirety of said award, said portion thereof, or said bonus prize.

16. (Original) The method of claim 14, wherein the live or pre-recorded event is a reality show that is broadcast over a mass communications medium.

17. (Original) The method of claim 16, wherein the mass communications medium comprises at least one of television, satellite, cable, the Internet, mobile communication device, social media and radio.

18. (Original) The method of claim 1, wherein the one or more wagering input devices are adapted for generating a wager for a player reflecting one or more predicted outcomes of the wagering event.

19. (Original) The method of claim 1, wherein ownership or partial ownership of the wager may be changed from player to player at any time before or during the course of the wagering event; and wherein the system controller is further adapted for identifying the ownership status of the wager.

20. (Original) The method of claim 1, wherein the wager further comprises a list that is at least one of printed on a ticket, printed on a voucher, and displayed via the one or more wagering input devices.

21. (Original) The method of claim 1, wherein the one or more wagering devices comprise at least one of a wagering terminal, a wagering workstation, a personal computer, a smart phone, a tablet computing device, a gaming machine, a slot machine, and a lottery machine.

22. (Original) The method of claim 1, wherein the wagering event comprises a pool or is progressive, wherein said pool is at least one of fixed, variable and guaranteed.

23. (Original) The method of claim 1, wherein where there are no winners of at least one award, said at least one award is rolled into another wagering event or at least partially awarded to an operator of the wagering event.

24. (Original) The method of claim 1, wherein the wagering event comprises at least one of a bonus and a consolation,

wherein designated players who have won qualify for the bonus and designated players who have lost qualify for the consolation, and

wherein correctly predicting an outcome of the bonus qualifies at least one designated player for at least a portion of a bonus prize and correctly predicting an outcome of the consolation qualifies at least one designated player for at least a portion of a consolation prize.

25. (Original) A wagering system including one or more wagering input devices for allowing the placement of a wager on a wagering event, the wagering system comprising:

a system controller configured to communicate with the one or more wagering input devices, said system controller configured to:

initiate the wagering event for one or more players;

receive a wager via the one or more wagering input devices in response to a player desiring to participate in the wagering event;

initiate one or more of at least one of a buy-out offer and a partial buy-out offer to any number of the one or more players before the wagering event has been completed;

identify any acceptances of the at least one of a buy-out offer and partial buy-out offer;

complete the wagering event; and

determine if any players have won.

26. (Original) The wagering system of claim 25, wherein the wagering event comprises at least one of an entire sporting event, a partial sporting event, a divisible component of a sporting event, multiple independent sporting events occurring sequentially or concurrently, and a compilation of related sporting events.

27. (Original) The wagering system of claim 25, wherein the wagering event comprises at least one of a bonus and a consolation,

wherein designated players who have won qualify for the bonus leg and designated players who have lost qualify for the consolation leg, and

wherein correctly predicting an outcome of the bonus qualifies at least one designated player for at least a portion of a bonus prize and correctly predicting an outcome of the consolation qualifies at least one designated player for at least a portion of a consolation prize.

28. (Original) The wagering system of claim 25, wherein the wager comprises at least one of an accumulator and parlay wager comprising at least one or more combinations, wherein the one or more combinations are selectable by at least one of a player, a third party, and the wagering system, and wherein at any time before the wager has been completed, at least one partial buy-out offer is initiated to any number of the one or more players remaining eligible to win at least one of an award or a portion of an award.

29. (Original) The wagering system of claim 25, wherein the one or more players are eligible to win an award comprising one or more selected from the group consisting of monetary awards, nonmonetary awards, a prize, a payment, a designated currency, virtual currency, tokens, credits, coupons, services, personal property, real property, virtual property, assets, investments, negotiable instruments, commodities, food, lodging, entertainment, alleviation of obligations, gaming opportunities and wager enhancement.

30. (Original) The wagering system of claim 25, wherein identifying any acceptances of said at least one of a buy-out offer and partial buy-out offer further comprises that each of the players accepting the buy-out offer will no longer be eligible to at least exclusively win an award, wherein each of the players not accepting the buy-out offer will remain eligible to win an award, and wherein each of the players accepting a partial buy-out offer remains eligible to win at least a portion of an award.

31. (Original) A wagering system including one or more wagering input devices for allowing the placement of a wager on a wagering event, the wagering system comprising:

a system controller configured to communicate with the one or more wagering input devices, said system controller configured to:

initiate the wagering event for one or more players;

receive a wager via the one or more wagering input devices in response to a player desiring to participate in the wagering event;

initiate one or more of at least one of a buy-out offer and a partial buy-out offer to any number of the one or more players before the wagering event has been completed; and

identify any acceptances of the at least one of a buy-out offer and partial buy-out offer.

32. (Original) The wagering system of claim 31, wherein the one or more players are eligible to win an award and the system controller is further configured to determine if any of the one or more players have won the award.

33. (Original) The wagering system of claim 32, wherein the award comprises one or more selected from the group consisting of monetary awards, nonmonetary awards, a prize, a payment, a designated currency, virtual currency, tokens, credits, coupons, services, personal property, real property, virtual property, assets, investments, negotiable instruments, commodities, food, lodging, entertainment, alleviation of obligations, gaming opportunities and wager enhancement.

34. (Original) The wagering system of claim 31, wherein the wagering event comprises one or more selected from the group consisting of sporting events, lotteries, real games, virtual games, live events, pre-recorded events, online events, broadcast events, slot machines, card games, keno, video games and racing.

35. (Original) The wagering system of claim 31 wherein the wagering event and wager comprises one or more of fixed odds single wagers, multiple wagers, full cover wagers, full cover wagers with singles, 'Any to Come' (ATC) or 'if cash' wagers, specialty wagers, forecasts, fixed, variable, guaranteed, parimutuel wagering, fixed-odds wagering, accumulator or parlay wagering, fixed odds, a pool, progressive, fixed pool, variable pool or guaranteed pool.

36. (Original) A method of conducting a wagering event for one or more players, wherein a player is presented with at least one of a buy-out offer and a partial buy-out offer prior to completion of the wagering event, the method comprising the steps of:

providing one or more wagering input devices in communication with a system controller through which one or more players may participate in a wagering event, said system controller being adapted for:

initiating the wagering event for one or more players;

receiving a wager via the one or more wagering input devices in response to a player desiring to participate in the wagering event;

identifying one or more players eligible to win from among players participating in the wagering event;

initiating at least one of a buy-out offer and partial buy-out offer to any number of the one or more players that are eligible to win, said buy-out offer or partial buy-out offer being initiated at any time before the wagering event has been completed; and

identifying any acceptances of said at least one of a buy-out offer and partial buy-out offer that have been initiated.

37. (Original) The method of claim 36, further comprising completing the wagering event and determining if any of the players have won.

38. (Original) The method of claim 37, wherein the one or more players are eligible to win an award comprising one or more selected from the group consisting of monetary awards, nonmonetary awards, a prize, a payment, a designated currency, virtual currency, tokens, credits, coupons, services, personal property, real property, virtual property, assets, investments, negotiable instruments, commodities, food, lodging, entertainment, alleviation of obligations, gaming opportunities and wager enhancement.

39. (Original) The method of claim 36, wherein the wagering event comprises one or more selected from the group consisting of sporting events, lotteries, real games, virtual games, live

events, pre-recorded events, online events, broadcast events, slot machines, card games, keno, video games and racing.

40. (Original) The method of claim 36, wherein the wagering event and wager comprises one or more of fixed odds single wagers, multiple wagers, full cover wagers, full cover wagers with singles, 'Any to Come' (ATC) or 'if cash' wagers, specialty wagers, forecasts, fixed, variable, guaranteed, parimutuel wagering, fixed-odds wagering, accumulator or parlay wagering, fixed odds, a pool, progressive, fixed pool, variable pool or guaranteed pool.

Remarks

Claims 1-40 are pending. Claim 10 has been amended solely to correct a formality error. No new subject matter has been added.

Telephone Interview

The Examiner is thanked for granting a telephone interview with the Applicant's representatives on October 23, 2014. During the telephone interview, the parties discussed differences between the Applicant's claims and US Publication No. 2011/0136566 to Acres (hereafter, "Acres"). In particular, the parties discussed how Claim 1, for example, recites a unique ability to offer both a buy-out offer and a partial buy-out offer to any number of players that are involved in a wagering event. It was then explained that a "partial buy-out offer" is defined in the specification as an offer to purchase a portion of a player's interest in any potential winnings resulting from the wagering event, where the player retains any unsold portion in said interest and remains eligible to win at least a portion of an award (*see* e.g., para. [0049] of the specification). For example, if a player is involved in a wagering event and is eligible to win a $1,000,000 jackpot, that player may sell a portion of his/her interest in the potential winnings, say 10% (or any other percentage), for an agreed-upon fee and retain the ability to win the remaining 90% of the jackpot. Thus, if the player wins the jackpot, he/she will win $900,000 and the purchaser of the 10% interest will be entitled to $100,000.

The parties then discussed Acres and, in particular, the fact that Acres fails to disclose or even contemplate the claimed capability to provide a "buy-out" and "partial buy-out" feature. To the contrary, Acres discusses offering a player a full buy-out offer (in the context of a card game) in return for the player surrendering his hand and the entirety of his potential win (*see* para. [0071] of Acres). Although Acres discusses buy-out offers of varying amounts, including amounts that are determined as a portion of the potential winnings, it was explained that all buy-out offers under Acres are for the entirety of the potential winnings. Indeed, as noted during the interview, acceptance by a player of a buy-out offer under Acres results in that player "surrendering his hand and its potential win." (Id.). To be clear, it was further emphasized that calculating a buy-out for a player's entire interest (as described in Acres) is not equivalent to purchasing only a portion of a player's interest in potential winnings where the player retains an interest in the potential winnings

(as in Claim 1, for example).

As a result of the telephone interview, it was agreed that Acres does not appear to disclose the claimed feature of a "partial buy-out" and "buy-out" that may be offered as alternatives to players, and as a result, the claims appear novel and fully patentable over Acres. However, it was also agreed that the Applicant would document the differences discussed during the telephone interview in a formal Response to afford the Examiner an opportunity to fully consider the Applicant's position. Accordingly, the Applicant hereby submits this formal Response to the outstanding Office Action of September 23, 2014.

Claims Rejected under 35 USC §112

Claim 10 stands rejected under 35 USC §112(b) for having insufficient antecedent basis. Claim 10 has been amended to correct the inadvertent typographical error giving rise to this rejection. As a result, this rejection is now moot and the Applicant respectfully requests that it be withdrawn.

Double Patenting

Claims 1-40 stand rejected based on an obviousness-type double-patenting rejection. In particular, it is alleged that Claims 1-40 of the present Application are not patentably distinct from Claims 1-30 of US Patent No. 8,721,439. Claims 1-40 are also provisionally rejected on the ground of non-statutory double patenting for not being patentably distinct over Claims 1-31 of US Application No. 14/449,541.

In response, the Applicant submits herewith two (2) timely filed Terminal Disclaimers in compliance with 37 CFR 1.321. Accordingly, this rejection is now moot and the Applicant respectfully requests that it be withdrawn.

Claims Rejected under 35 USC §102

Claims 1-40 stand rejected under 35 USC §102(b) as allegedly being unpatentable over Acres (US Publication No. 2011/0136566). The Applicant respectfully traverses this rejection.

Claim 1 is directed toward a method of conducting a wagering event for one or more players, where a player may presented with a buy-out offer or a partial buy-out offer prior to completion of the wagering event. A "partial buy-out offer," in the context of the claims and the present Application, refers to an offer to purchase a portion of a player's interest in any potential winnings

resulting from the wagering event, where the player retains any unsold portion in said interest and remains eligible to win at least a portion of an award resulting from the wagering event (*see* e.g., para. [0049] of the specification). For example, if a player is involved in a wagering event and is eligible to win a $1,000,000 jackpot, that player may sell a portion of his/her interest in the potential winnings, say 10% (or any other percentage), for an agreed-upon fee and retain the ability to win the remaining 90% of the jackpot. Thus, if the player wins the jackpot, he/she will win $900,000 and the purchaser of the 10% interest will be entitled to $100,000.

Acres, on the other hand, fails to disclose or even contemplate the claimed "partial buy-out" feature. To the contrary, Acres discusses offering a player a full buy-out offer in return for the player surrendering his hand (in the context of a card game) and the entirety of his potential win (*see* para. [0071] of Acres). Although Acres discusses various methods of determining the full buy-out *amount* (e.g., 5X the player's initial wager or determined as a portion of the potential winnings), all buy-out offers under Acres (regardless of the amount of the offer) are for the entirety of the potential winnings. Indeed, as noted above, acceptance by a player of a buy-out offer under Acres results in that player "surrendering his hand and its [entire] potential win." (Id.).

Accordingly, since Acres (at a minimum) fails to disclose or even contemplate the claimed partial buy-out feature, Acres does not anticipate Claim 1 and cannot support a §102(b) rejection. Claim 1 is therefore fully patentable over Acres. Since Claims 2-40 recite similar features to those recited in Claim 1, including (for example) the claimed "partial buy-out" feature, each of Claims 2-40 are also fully patentable over Acres. Reconsideration and withdrawal of the §102 rejection are respectfully requested.

Conclusion

In view of the foregoing, the Applicant submits that the entire Application is in condition for allowance, which action is earnestly requested.

Respectfully submitted,

Paul A. Taufer
Reg. No. 35,703
Richard L. Cruz
Reg. No. 52,783

PAT/RLC/nn
(215) 656-3385

PTO/AIA/26 (04-14)
Approved for use through 07/31/2016. OMB 0651-0031
U.S. Patent and Trademark Office; U.S. DEPARTMENT OF COMMERCE
Under the Paperwork Reduction Act of 1995, no persons are required to respond to a collection of information unless it displays a valid OMB control number.

TERMINAL DISCLAIMER TO OBVIATE A DOUBLE PATENTING REJECTION OVER A "PRIOR" PATENT	Docket Number (Optional) COB-13-1044CIP3-CON

In re Application of: Bernard J. Marantelli

Application No.: 14/275,136

Filed: May 12, 2014

For: WAGERING APPARATUS, METHODS AND SYSTEMS

The applicant, Diogenes Limited, owner of 100 percent interest in the instant application hereby disclaims, except as provided below, the terminal part of the statutory term of any patent granted on the instant application which would extend beyond the expiration date of the full statutory term of **prior patent** No. 8,721,439 as the term of said **prior patent** is presently shortened by any terminal disclaimer. The applicant hereby agrees that any patent so granted on the instant application shall be enforceable only for and during such period that it and the **prior patent** are commonly owned. This agreement runs with any patent granted on the instant application and is binding upon the grantee, its successors or assigns.

In making the above disclaimer, the applicant does not disclaim the terminal part of the term of any patent granted on the instant application that would extend to the expiration date of the full statutory term of the **prior patent**, "as the term of said **prior patent** is presently shortened by any terminal disclaimer," in the event that said **prior patent** later:

expires for failure to pay a maintenance fee;
is held unenforceable;
is found invalid by a court of competent jurisdiction;
is statutorily disclaimed in whole or terminally disclaimed under 37 CFR 1.321;
has all claims canceled by a reexamination certificate;
is reissued; or
is in any manner terminated prior to the expiration of its full statutory term as presently shortened by any terminal disclaimer.

Check either box 1 or 2 below, if appropriate.

1. ☐ The undersigned is the applicant. If the applicant is an assignee, the undersigned is authorized to act on behalf of the assignee.

I hereby acknowledge that any willful false statements made are punishable under 18 U.S.C. 1001 by fine or imprisonment of not more than five (5) years, or both.

2. ☑ The undersigned is an attorney or agent of record. Reg. No. 35,703

Signature	December 18, 2014 Date
Paul A. Taufer Typed or printed name	
Attorney of Record Title	215-656-3385 Telephone Number

☑ Terminal disclaimer fee under 37 CFR 1.20(d) included.

WARNING: Information on this form may become public. Credit card information should not be included on this form. Provide credit card information and authorization on PTO-2038.

This collection of information is required by 37 CFR 1.321. The information is required to obtain or retain a benefit by the public which is to file (and by the USPTO to process) an application. Confidentiality is governed by 35 U.S.C. 122 and 37 CFR 1.11 and 1.14. This collection is estimated to take 12 minutes to complete, including gathering, preparing, and submitting the completed application form to the USPTO. Time will vary depending upon the individual case. Any comments on the amount of time you require to complete this form and/or suggestions for reducing this burden, should be sent to the Chief Information Officer, U.S. Patent and Trademark Office, U.S. Department of Commerce, P.O. Box 1450, Alexandria, VA 22313-1450. DO NOT SEND FEES OR COMPLETED FORMS TO THIS ADDRESS. **SEND TO: Commissioner for Patents, P.O. Box 1450, Alexandria, VA 22313-1450.**

If you need assistance in completing the form, call 1-800-PTO-9199 and select option 2.

Privacy Act Statement

The **Privacy Act of 1974 (P.L. 93-579)** requires that you be given certain information in connection with your submission of the attached form related to a patent application or patent. Accordingly, pursuant to the requirements of the Act, please be advised that: (1) the general authority for the collection of this information is 35 U.S.C. 2(b)(2); (2) furnishing of the information solicited is voluntary; and (3) the principal purpose for which the information is used by the U.S. Patent and Trademark Office is to process and/or examine your submission related to a patent application or patent. If you do not furnish the requested information, the U.S. Patent and Trademark Office may not be able to process and/or examine your submission, which may result in termination of proceedings or abandonment of the application or expiration of the patent.

The information provided by you in this form will be subject to the following routine uses:

1. The information on this form will be treated confidentially to the extent allowed under the Freedom of Information Act (5 U.S.C. 552) and the Privacy Act (5 U.S.C 552a). Records from this system of records may be disclosed to the Department of Justice to determine whether disclosure of these records is required by the Freedom of Information Act.
2. A record from this system of records may be disclosed, as a routine use, in the course of presenting evidence to a court, magistrate, or administrative tribunal, including disclosures to opposing counsel in the course of settlement negotiations.
3. A record in this system of records may be disclosed, as a routine use, to a Member of Congress submitting a request involving an individual, to whom the record pertains, when the individual has requested assistance from the Member with respect to the subject matter of the record.
4. A record in this system of records may be disclosed, as a routine use, to a contractor of the Agency having need for the information in order to perform a contract. Recipients of information shall be required to comply with the requirements of the Privacy Act of 1974, as amended, pursuant to 5 U.S.C. 552a(m).
5. A record related to an International Application filed under the Patent Cooperation Treaty in this system of records may be disclosed, as a routine use, to the International Bureau of the World Intellectual Property Organization, pursuant to the Patent Cooperation Treaty.
6. A record in this system of records may be disclosed, as a routine use, to another federal agency for purposes of National Security review (35 U.S.C. 181) and for review pursuant to the Atomic Energy Act (42 U.S.C. 218(c)).
7. A record from this system of records may be disclosed, as a routine use, to the Administrator, General Services, or his/her designee, during an inspection of records conducted by GSA as part of that agency's responsibility to recommend improvements in records management practices and programs, under authority of 44 U.S.C. 2904 and 2906. Such disclosure shall be made in accordance with the GSA regulations governing inspection of records for this purpose, and any other relevant (*i.e.*, GSA or Commerce) directive. Such disclosure shall not be used to make determinations about individuals.
8. A record from this system of records may be disclosed, as a routine use, to the public after either publication of the application pursuant to 35 U.S.C. 122(b) or issuance of a patent pursuant to 35 U.S.C. 151. Further, a record may be disclosed, subject to the limitations of 37 CFR 1.14, as a routine use, to the public if the record was filed in an application which became abandoned or in which the proceedings were terminated and which application is referenced by either a published application, an application open to public inspection or an issued patent.
9. A record from this system of records may be disclosed, as a routine use, to a Federal, State, or local law enforcement agency, if the USPTO becomes aware of a violation or potential violation of law or regulation.

PTO/AIA/25 (04-13)
Approved for use through 04/30/2013. OMB 0651-0031
U.S. Patent and Trademark Office; U.S. DEPARTMENT OF COMMERCE
Under the Paperwork Reduction Act of 1995, no persons are required to respond to a collection of information unless it displays a valid OMB control number.

TERMINAL DISCLAIMER TO OBVIATE A PROVISIONAL DOUBLE PATENTING REJECTION OVER A PENDING "REFERENCE" APPLICATION	Docket Number (Optional) COB-13-1044CIP3-CON

In re Application of: Bernard J. Marantelli

Application No.: 14/275,136

Filed: May 12, 2014

For: WAGERING APPARATUS, METHODS AND SYSTEMS

The applicant, Diogenes Limited, owner of 100 percent interest in the instant application hereby disclaims, except as provided below, the terminal part of the statutory term of any patent granted on the instant application which would extend beyond the expiration date of the full statutory term of any patent granted on pending **reference** Application Number 14/449,541, filed, August 1, 2014, as the term of any patent granted on said **reference** application may be shortened by any terminal disclaimer filed prior to the grant of any patent on the pending **reference** application. The applicant hereby agrees that any patent so granted on the instant application shall be enforceable only for and during such period that it and any patent granted on the **reference** application are commonly owned. This agreement runs with any patent granted on the instant application and is binding upon the grantee, its successors or assigns.

In making the above disclaimer, the applicant does not disclaim the terminal part of any patent granted on the instant application that would extend to the expiration date of the full statutory term of any patent granted on said **reference** application, "as the term of any patent granted on said **reference** application may be shortened by any terminal disclaimer filed prior to the grant of any patent on the pending **reference** application," in the event that: any such patent granted on the pending **reference** application expires for failure to pay a maintenance fee, is held unenforceable, is found invalid by a court of competent jurisdiction, is statutorily disclaimed in whole or terminally disclaimed under 37 CFR 1.321, has all claims canceled by a reexamination certificate, is reissued, or is in any manner terminated prior to the expiration of its full statutory term as shortened by any terminal disclaimer filed prior to its grant.

Check either box 1 or 2 below, if appropriate.

1. ☐ The undersigned is the applicant. If the applicant is an assignee, the undersigned is authorized to act on behalf of the assignee.

I hereby acknowledge that any willful false statements made are punishable under 18 U.S.C. 1001 by fine or imprisonment of not more than five (5) years, or both.

2. ☑ The undersigned is an attorney or agent of record. Reg. No. 35,703

Signature	December 18, 2014 Date
Paul A. Taufer Typed or printed name	
Attorney of Record Title	215-656-3385 Telephone Number

☑ Terminal disclaimer fee under 37 CFR 1.20(d) is included.

WARNING: Information on this form may become public. Credit card information should not be included on this form. Provide credit card information and authorization on PTO-2038.

This collection of information is required by 37 CFR 1.321. The information is required to obtain or retain a benefit by the public which is to file (and by the USPTO to process) an application. Confidentiality is governed by 35 U.S.C. 122 and 37 CFR 1.11 and 1.14. This collection is estimated to take 12 minutes to complete, including gathering, preparing, and submitting the completed application form to the USPTO. Time will vary depending upon the individual case. Any comments on the amount of time you require to complete this form and/or suggestions for reducing this burden, should be sent to the Chief Information Officer, U.S. Patent and Trademark Office, U.S. Department of Commerce, P.O. Box 1450, Alexandria, VA 22313-1450. DO NOT SEND FEES OR COMPLETED FORMS TO THIS ADDRESS. **SEND TO: Commissioner for Patents, P.O. Box 1450, Alexandria, VA 22313-1450.**

If you need assistance in completing the form, call 1-800-PTO-9199 and select option 2.

Privacy Act Statement

The **Privacy Act of 1974 (P.L. 93-579)** requires that you be given certain information in connection with your submission of the attached form related to a patent application or patent. Accordingly, pursuant to the requirements of the Act, please be advised that: (1) the general authority for the collection of this information is 35 U.S.C. 2(b)(2); (2) furnishing of the information solicited is voluntary; and (3) the principal purpose for which the information is used by the U.S. Patent and Trademark Office is to process and/or examine your submission related to a patent application or patent. If you do not furnish the requested information, the U.S. Patent and Trademark Office may not be able to process and/or examine your submission, which may result in termination of proceedings or abandonment of the application or expiration of the patent.

The information provided by you in this form will be subject to the following routine uses:

1. The information on this form will be treated confidentially to the extent allowed under the Freedom of Information Act (5 U.S.C. 552) and the Privacy Act (5 U.S.C 552a). Records from this system of records may be disclosed to the Department of Justice to determine whether disclosure of these records is required by the Freedom of Information Act.
2. A record from this system of records may be disclosed, as a routine use, in the course of presenting evidence to a court, magistrate, or administrative tribunal, including disclosures to opposing counsel in the course of settlement negotiations.
3. A record in this system of records may be disclosed, as a routine use, to a Member of Congress submitting a request involving an individual, to whom the record pertains, when the individual has requested assistance from the Member with respect to the subject matter of the record.
4. A record in this system of records may be disclosed, as a routine use, to a contractor of the Agency having need for the information in order to perform a contract. Recipients of information shall be required to comply with the requirements of the Privacy Act of 1974, as amended, pursuant to 5 U.S.C. 552a(m).
5. A record related to an International Application filed under the Patent Cooperation Treaty in this system of records may be disclosed, as a routine use, to the International Bureau of the World Intellectual Property Organization, pursuant to the Patent Cooperation Treaty.
6. A record in this system of records may be disclosed, as a routine use, to another federal agency for purposes of National Security review (35 U.S.C. 181) and for review pursuant to the Atomic Energy Act (42 U.S.C. 218(c)).
7. A record from this system of records may be disclosed, as a routine use, to the Administrator, General Services, or his/her designee, during an inspection of records conducted by GSA as part of that agency's responsibility to recommend improvements in records management practices and programs, under authority of 44 U.S.C. 2904 and 2906. Such disclosure shall be made in accordance with the GSA regulations governing inspection of records for this purpose, and any other relevant (*i.e.*, GSA or Commerce) directive. Such disclosure shall not be used to make determinations about individuals.
8. A record from this system of records may be disclosed, as a routine use, to the public after either publication of the application pursuant to 35 U.S.C. 122(b) or issuance of a patent pursuant to 35 U.S.C. 151. Further, a record may be disclosed, subject to the limitations of 37 CFR 1.14, as a routine use, to the public if the record was filed in an application which became abandoned or in which the proceedings were terminated and which application is referenced by either a published application, an application open to public inspection or an issued patent.
9. A record from this system of records may be disclosed, as a routine use, to a Federal, State, or local law enforcement agency, if the USPTO becomes aware of a violation or potential violation of law or regulation.

Electronic Patent Application Fee Transmittal

Application Number:	14275136
Filing Date:	12-May-2014
Title of Invention:	WAGERING APPARATUS, METHODS AND SYSTEMS
First Named Inventor/Applicant Name:	Bernard J. Marantelli
Filer:	Paul A. Taufer/Nancy Nunez
Attorney Docket Number:	COB-13-1044CIP3-CON

Filed as Small Entity

Filing Fees for Utility under 35 USC 111(a)

Description	Fee Code	Quantity	Amount	Sub-Total in USD($)
Basic Filing:				
Pages:				
Claims:				
Miscellaneous-Filing:				
Petition:				
Patent-Appeals-and-Interference:				
Post-Allowance-and-Post-Issuance:				
Extension-of-Time:				

Description	Fee Code	Quantity	Amount	Sub-Total in USD($)
Miscellaneous:				
Statutory or Terminal Disclaimer	1814	2	160	320
		Total in USD ($)		**320**

Electronic Acknowledgement Receipt

EFS ID:	21004979
Application Number:	14275136
International Application Number:	
Confirmation Number:	9997
Title of Invention:	WAGERING APPARATUS, METHODS AND SYSTEMS
First Named Inventor/Applicant Name:	Bernard J. Marantelli
Customer Number:	35811
Filer:	Paul A. Taufer/Nancy Nunez
Filer Authorized By:	Paul A. Taufer
Attorney Docket Number:	COB-13-1044CIP3-CON
Receipt Date:	18-DEC-2014
Filing Date:	12-MAY-2014
Time Stamp:	14:58:21
Application Type:	Utility under 35 USC 111(a)

Payment information:

Submitted with Payment	yes
Payment Type	Deposit Account
Payment was successfully received in RAM	$320
RAM confirmation Number	1336
Deposit Account	502719
Authorized User	

The Director of the USPTO is hereby authorized to charge indicated fees and credit any overpayment as follows:

Charge any Additional Fees required under 37 C.F.R. Section 1.16 (National application filing, search, and examination fees)

Charge any Additional Fees required under 37 C.F.R. Section 1.17 (Patent application and reexamination processing fees)

Charge any Additional Fees required under 37 C.F.R. Section 1.19 (Document supply fees)

Charge any Additional Fees required under 37 C.F.R. Section 1.20 (Post Issuance fees)

Charge any Additional Fees required under 37 C.F.R. Section 1.21 (Miscellaneous fees and charges)

File Listing:

Document Number	Document Description	File Name	File Size(Bytes)/ Message Digest	Multi Part /.zip	Pages (if appl.)
1	Miscellaneous Incoming Letter	AmendTL.pdf	46452 0373646594dccecd6bd4deb5eac9d9aef3da5de5	no	1
Warnings:					
Information:					
2		Response.pdf	490142 c5dbf91ea5d2d3692bfbe7119df5b3e6e2db2cce	yes	14
	Multipart Description/PDF files in .zip description				
	Document Description		**Start**	**End**	
	Amendment/Req. Reconsideration-After Non-Final Reject		1	1	
	Amendment Copy Claims/Response to Suggested Claims		2	10	
	Applicant Arguments/Remarks Made in an Amendment		11	14	
Warnings:					
Information:					
3	Terminal Disclaimer Filed	TD1.pdf	119702 7f5a7eeca131cc5f6252774777b5d9b1701433f1	no	2
Warnings:					
Information:					
4	Terminal Disclaimer Filed	TD2.pdf	123167 db2fb368ee7bd9720e982731206c0fa74e9560cb	no	2
Warnings:					
Information:					
5	Fee Worksheet (SB06)	fee-info.pdf	30446 72844b42544e483c25f94d0e6db5453666caf110	no	2
Warnings:					
Information:					
		Total Files Size (in bytes):	809909		

This Acknowledgement Receipt evidences receipt on the noted date by the USPTO of the indicated documents, characterized by the applicant, and including page counts, where applicable. It serves as evidence of receipt similar to a Post Card, as described in MPEP 503.

New Applications Under 35 U.S.C. 111
If a new application is being filed and the application includes the necessary components for a filing date (see 37 CFR 1.53(b)-(d) and MPEP 506), a Filing Receipt (37 CFR 1.54) will be issued in due course and the date shown on this Acknowledgement Receipt will establish the filing date of the application.

National Stage of an International Application under 35 U.S.C. 371
If a timely submission to enter the national stage of an international application is compliant with the conditions of 35 U.S.C. 371 and other applicable requirements a Form PCT/DO/EO/903 indicating acceptance of the application as a national stage submission under 35 U.S.C. 371 will be issued in addition to the Filing Receipt, in due course.

New International Application Filed with the USPTO as a Receiving Office
If a new international application is being filed and the international application includes the necessary components for an international filing date (see PCT Article 11 and MPEP 1810), a Notification of the International Application Number and of the International Filing Date (Form PCT/RO/105) will be issued in due course, subject to prescriptions concerning national security, and the date shown on this Acknowledgement Receipt will establish the international filing date of the application.

Attorney Docket No.: COB-13-1044CIP3-CON

In re Application of Bernard J. Marantelli
Serial No.: 14/275,136
Filed: May 12, 2014
For: WAGERING APPARATUS, METHODS AND SYSTEMS

Mail Stop Amendment
Commissioner for Patents
P.O. Box 1450
Alexandria, VA 22313-1450

Sir:

A response to the outstanding official action in the above-identified application is enclosed along with two (2) Terminal Disclaimers.

☐ Small entity status of this application under 37 CFR §1.9 and §1.27 has been established.

☐ This is a Petition for an Extension of Time for the period noted below, as well as for any additional period necessary to render this submission timely.

☒ No additional fee is required.

		SMALL ENTITY	OTHER THAN SMALL ENTITY
TIME EXTENSION PETITION FEE	No. of month(s): 0	$0.00	$0.00
Subtract time extension fee previously paid	No. of month(s): 0	($0.00)	($0.00)
TOTAL EXTENSION FEE DUE		$0.00	$0.00

CLAIM FEE	CLAIM(S) REMAINING AFTER AMENDMENT		HIGHEST NUMBER PREVIOUSLY PAID FOR	EXTRA CLAIM(S) PRESENT	RATE	ADD'L CLAIM FEE	RATE	ADD'L CLAIM FEE
TOTAL	40	MINUS	40	= 0	x 40=	$0.00	x 80=	$
INDEPENDENT	4	MINUS	4	= 0	x 210=	$0.00	x 420=	$
☐	FIRST PRESENTATION OF MULTIPLE CLAIM(S)				+ 390=	$0.00	+ 780=	$
TOTAL ADDITIONAL CLAIM FEE DUE						$0.00		$
TOTAL FEE DUE $0.00								

☐ Please charge Deposit Account No. 50-2719 in the amount of $_____.

☒ The Commissioner is authorized to charge payment of the following fees associated with this communication or credit any overpayment to Deposit Account No. 50-2719.

☒ Any filing fees under 37 CFR §1.16 for the presentation of extra claims.

☒ Any patent application processing fees under 37 CFR §1.17.

Respectfully submitted,

Date: December 18, 2014

Paul A. Taufer, Reg. No. 35,703
Richard L. Cruz, Reg. No. 52,783

PAT/RLC/nn
(215) 656-3385
EAST\87639777.1

PTO/SB/06 (09-11)
Approved for use through 1/31/2014. OMB 0651-0032
U.S. Patent and Trademark Office; U.S. DEPARTMENT OF COMMERCE
Under the Paperwork Reduction Act of 1995, no persons are required to respond to a collection of information unless it displays a valid OMB control number.

PATENT APPLICATION FEE DETERMINATION RECORD Substitute for Form PTO-875	Application or Docket Number 14/275,136	Filing Date 05/12/2014	☐ To be Mailed

ENTITY: ☐ LARGE ☒ SMALL ☐ MICRO

APPLICATION AS FILED – PART I

FOR	(Column 1) NUMBER FILED	(Column 2) NUMBER EXTRA	RATE ($)	FEE ($)
☐ BASIC FEE (37 CFR 1.16(a), (b), or (c))	N/A	N/A	N/A	
☐ SEARCH FEE (37 CFR 1.16(k), (i), or (m))	N/A	N/A	N/A	
☐ EXAMINATION FEE (37 CFR 1.16(o), (p), or (q))	N/A	N/A	N/A	
TOTAL CLAIMS (37 CFR 1.16(i))	minus 20 =	*	X $ =	
INDEPENDENT CLAIMS (37 CFR 1.16(h))	minus 3 =	*	X $ =	
☐ APPLICATION SIZE FEE (37 CFR 1.16(s))	If the specification and drawings exceed 100 sheets of paper, the application size fee due is $310 ($155 for small entity) for each additional 50 sheets or fraction thereof. See 35 U.S.C. 41(a)(1)(G) and 37 CFR 1.16(s).			
☐ MULTIPLE DEPENDENT CLAIM PRESENT (37 CFR 1.16(j))				
* If the difference in column 1 is less than zero, enter "0" in column 2.			TOTAL	

APPLICATION AS AMENDED – PART II

AMENDMENT

12/18/2014	(Column 1) CLAIMS REMAINING AFTER AMENDMENT		(Column 2) HIGHEST NUMBER PREVIOUSLY PAID FOR	(Column 3) PRESENT EXTRA	RATE ($)	ADDITIONAL FEE ($)
Total (37 CFR 1.16(i))	* 40	Minus	** 40	= 0	X $40 =	0
Independent (37 CFR 1.16(h))	* 4	Minus	***4	= 0	X $210 =	0
☐ Application Size Fee (37 CFR 1.16(s))						
☐ FIRST PRESENTATION OF MULTIPLE DEPENDENT CLAIM (37 CFR 1.16(j))						
					TOTAL ADD'L FEE	**0**

AMENDMENT

	(Column 1) CLAIMS REMAINING AFTER AMENDMENT		(Column 2) HIGHEST NUMBER PREVIOUSLY PAID FOR	(Column 3) PRESENT EXTRA	RATE ($)	ADDITIONAL FEE ($)
Total (37 CFR 1.16(i))	*	Minus	**	=	X $ =	
Independent (37 CFR 1.16(h))	*	Minus	***	=	X $ =	
☐ Application Size Fee (37 CFR 1.16(s))						
☐ FIRST PRESENTATION OF MULTIPLE DEPENDENT CLAIM (37 CFR 1.16(j))						
					TOTAL ADD'L FEE	

* If the entry in column 1 is less than the entry in column 2, write "0" in column 3.
** If the "Highest Number Previously Paid For" IN THIS SPACE is less than 20, enter "20".
*** If the "Highest Number Previously Paid For" IN THIS SPACE is less than 3, enter "3".
The "Highest Number Previously Paid For" (Total or Independent) is the highest number found in the appropriate box in column 1.

LIE
/SHARON HARRIS/

This collection of information is required by 37 CFR 1.16. The information is required to obtain or retain a benefit by the public which is to file (and by the USPTO to process) an application. Confidentiality is governed by 35 U.S.C. 122 and 37 CFR 1.14. This collection is estimated to take 12 minutes to complete, including gathering, preparing, and submitting the completed application form to the USPTO. Time will vary depending upon the individual case. Any comments on the amount of time you require to complete this form and/or suggestions for reducing this burden, should be sent to the Chief Information Officer, U.S. Patent and Trademark Office, U.S. Department of Commerce, P.O. Box 1450, Alexandria, VA 22313-1450. DO NOT SEND FEES OR COMPLETED FORMS TO THIS ADDRESS. **SEND TO: Commissioner for Patents, P.O. Box 1450, Alexandria, VA 22313-1450.**
If you need assistance in completing the form, call 1-800-PTO-9199 and select option 2.

UNITED STATES PATENT AND TRADEMARK OFFICE

UNITED STATES DEPARTMENT OF COMMERCE
United States Patent and Trademark Office
Address: COMMISSIONER FOR PATENTS
P.O. Box 1450
Alexandria, Virginia 22313-1450
www.uspto.gov

APPLICATION NO.	FILING DATE	FIRST NAMED INVENTOR	ATTORNEY DOCKET NO.	CONFIRMATION NO.
14/275,136	05/12/2014	Bernard J. Marantelli	COB-13-1044CIP3-CON	9997

35811 7590 10/28/2014
IP GROUP OF DLA PIPER LLP (US)
ONE LIBERTY PLACE
1650 MARKET ST, SUITE 4900
PHILADELPHIA, PA 19103

EXAMINER
TORIMIRO, ADETOKUNBO OLUSEGUN

ART UNIT	PAPER NUMBER
3714	

NOTIFICATION DATE	DELIVERY MODE
10/28/2014	ELECTRONIC

Please find below and/or attached an Office communication concerning this application or proceeding.

The time period for reply, if any, is set in the attached communication.

Notice of the Office communication was sent electronically on above-indicated "Notification Date" to the following e-mail address(es):

pto.phil@dlapiper.com

Applicant-Initiated Interview Summary	Application No.	Applicant(s)	
	14/275,136	MARANTELLI, BERNARD J.	
	Examiner	Art Unit	
	ADETOKUNBO O. TORIMIRO	3714	

All participants (applicant, applicant's representative, PTO personnel):

(1) *ADETOKUNBO O. TORIMIRO*. (3) *Paul Taufer*.

(2) *Richard Cruz*. (4)_____.

Date of Interview: *23 October 2014*.

Type: ☒ Telephonic ☐ Video Conference
☐ Personal [copy given to: ☐ applicant ☐ applicant's representative]

Exhibit shown or demonstration conducted: ☐ Yes ☒ No.
If Yes, brief description: _____.

Issues Discussed ☐101 ☐112 ☒102 ☐103 ☐Others
(For each of the checked box(es) above, please describe below the issue and detailed description of the discussion)

Claim(s) discussed: *1*.

Identification of prior art discussed: *Acres et al*.

Substance of Interview
(For each issue discussed, provide a detailed description and indicate if agreement was reached. Some topics may include: identification or clarification of a reference or a portion thereof, claim interpretation, proposed amendments, arguments of any applied references etc...)

Claim limitations were clarified. The prior art of record was discussed, specifically the difference of Partial Buy-out between the prior art and the Applicants claimed invention. No agreement was reached. The examiner will fully and fairly respond to the Applicant's timely filed response to the office..

Applicant recordation instructions: The formal written reply to the last Office action must include the substance of the interview. (See MPEP section 713.04). If a reply to the last Office action has already been filed, applicant is given a non-extendable period of the longer of one month or thirty days from this interview date, or the mailing date of this interview summary form, whichever is later, to file a statement of the substance of the interview

Examiner recordation instructions: Examiners must summarize the substance of any interview of record. A complete and proper recordation of the substance of an interview should include the items listed in MPEP 713.04 for complete and proper recordation including the identification of the general thrust of each argument or issue discussed, a general indication of any other pertinent matters discussed regarding patentability and the general results or outcome of the interview, to include an indication as to whether or not agreement was reached on the issues raised.

☐ Attachment

/ADETOKUNBO O TORIMIRO/ Examiner, Art Unit 3714	

Summary of Record of Interview Requirements

Manual of Patent Examining Procedure (MPEP), Section 713.04, Substance of Interview Must be Made of Record
A complete written statement as to the substance of any face-to-face, video conference, or telephone interview with regard to an application must be made of record in the application whether or not an agreement with the examiner was reached at the interview.

Title 37 Code of Federal Regulations (CFR) § 1.133 Interviews
Paragraph (b)

In every instance where reconsideration is requested in view of an interview with an examiner, a complete written statement of the reasons presented at the interview as warranting favorable action must be filed by the applicant. An interview does not remove the necessity for reply to Office action as specified in §§ 1.111, 1.135. (35 U.S.C. 132)

37 CFR §1.2 Business to be transacted in writing.
All business with the Patent or Trademark Office should be transacted in writing. The personal attendance of applicants or their attorneys or agents at the Patent and Trademark Office is unnecessary. The action of the Patent and Trademark Office will be based exclusively on the written record in the Office. No attention will be paid to any alleged oral promise, stipulation, or understanding in relation to which there is disagreement or doubt.

The action of the Patent and Trademark Office cannot be based exclusively on the written record in the Office if that record is itself incomplete through the failure to record the substance of interviews.

It is the responsibility of the applicant or the attorney or agent to make the substance of an interview of record in the application file, unless the examiner indicates he or she will do so. It is the examiner's responsibility to see that such a record is made and to correct material inaccuracies which bear directly on the question of patentability.

Examiners must complete an Interview Summary Form for each interview held where a matter of substance has been discussed during the interview by checking the appropriate boxes and filling in the blanks. Discussions regarding only procedural matters, directed solely to restriction requirements for which interview recordation is otherwise provided for in Section 812.01 of the Manual of Patent Examining Procedure, or pointing out typographical errors or unreadable script in Office actions or the like, are excluded from the interview recordation procedures below. Where the substance of an interview is completely recorded in an Examiners Amendment, no separate Interview Summary Record is required.

The Interview Summary Form shall be given an appropriate Paper No., placed in the right hand portion of the file, and listed on the "Contents" section of the file wrapper. In a personal interview, a duplicate of the Form is given to the applicant (or attorney or agent) at the conclusion of the interview. In the case of a telephone or video-conference interview, the copy is mailed to the applicant's correspondence address either with or prior to the next official communication. If additional correspondence from the examiner is not likely before an allowance or if other circumstances dictate, the Form should be mailed promptly after the interview rather than with the next official communication.

The Form provides for recordation of the following information:
- Application Number (Series Code and Serial Number)
- Name of applicant
- Name of examiner
- Date of interview
- Type of interview (telephonic, video-conference, or personal)
- Name of participant(s) (applicant, attorney or agent, examiner, other PTO personnel, etc.)
- An indication whether or not an exhibit was shown or a demonstration conducted
- An identification of the specific prior art discussed
- An indication whether an agreement was reached and if so, a description of the general nature of the agreement (may be by attachment of a copy of amendments or claims agreed as being allowable). Note: Agreement as to allowability is tentative and does not restrict further action by the examiner to the contrary.
- The signature of the examiner who conducted the interview (if Form is not an attachment to a signed Office action)

It is desirable that the examiner orally remind the applicant of his or her obligation to record the substance of the interview of each case. It should be noted, however, that the Interview Summary Form will not normally be considered a complete and proper recordation of the interview unless it includes, or is supplemented by the applicant or the examiner to include, all of the applicable items required below concerning the substance of the interview.

A complete and proper recordation of the substance of any interview should include at least the following applicable items:
1) A brief description of the nature of any exhibit shown or any demonstration conducted,
2) an identification of the claims discussed,
3) an identification of the specific prior art discussed,
4) an identification of the principal proposed amendments of a substantive nature discussed, unless these are already described on the Interview Summary Form completed by the Examiner,
5) a brief identification of the general thrust of the principal arguments presented to the examiner,
   (The identification of arguments need not be lengthy or elaborate. A verbatim or highly detailed description of the arguments is not required. The identification of the arguments is sufficient if the general nature or thrust of the principal arguments made to the examiner can be understood in the context of the application file. Of course, the applicant may desire to emphasize and fully describe those arguments which he or she feels were or might be persuasive to the examiner.)
6) a general indication of any other pertinent matters discussed, and
7) if appropriate, the general results or outcome of the interview unless already described in the Interview Summary Form completed by the examiner.

Examiners are expected to carefully review the applicant's record of the substance of an interview. If the record is not complete and accurate, the examiner will give the applicant an extendable one month time period to correct the record.

Examiner to Check for Accuracy

If the claims are allowable for other reasons of record, the examiner should send a letter setting forth the examiner's version of the statement attributed to him or her. If the record is complete and accurate, the examiner should place the indication, "Interview Record OK" on the paper recording the substance of the interview along with the date and the examiner's initials.

UNITED STATES PATENT AND TRADEMARK OFFICE

UNITED STATES DEPARTMENT OF COMMERCE
United States Patent and Trademark Office
Address: COMMISSIONER FOR PATENTS
P.O. Box 1450
Alexandria, Virginia 22313-1450
www.uspto.gov

APPLICATION NO.	FILING DATE	FIRST NAMED INVENTOR	ATTORNEY DOCKET NO.	CONFIRMATION NO.
14/275,136	05/12/2014	Bernard J. Marantelli	COB-13-1044CIP3-CON	9997

35811 7590 09/23/2014
IP GROUP OF DLA PIPER LLP (US)
ONE LIBERTY PLACE
1650 MARKET ST, SUITE 4900
PHILADELPHIA, PA 19103

EXAMINER
TORIMIRO, ADETOKUNBO OLUSEGUN

ART UNIT	PAPER NUMBER
3714	

NOTIFICATION DATE	DELIVERY MODE
09/23/2014	ELECTRONIC

Please find below and/or attached an Office communication concerning this application or proceeding.

The time period for reply, if any, is set in the attached communication.

Notice of the Office communication was sent electronically on above-indicated "Notification Date" to the following e-mail address(es):

pto.phil@dlapiper.com

Office Action Summary	Application No. 14/275,136	Applicant(s) MARANTELLI, BERNARD J.	
	Examiner ADETOKUNBO O. TORIMIRO	Art Unit 3714	AIA (First Inventor to File) Status No

-- The MAILING DATE of this communication appears on the cover sheet with the correspondence address --

Period for Reply

A SHORTENED STATUTORY PERIOD FOR REPLY IS SET TO EXPIRE 3 MONTHS FROM THE MAILING DATE OF THIS COMMUNICATION.

- Extensions of time may be available under the provisions of 37 CFR 1.136(a). In no event, however, may a reply be timely filed after SIX (6) MONTHS from the mailing date of this communication.
- If NO period for reply is specified above, the maximum statutory period will apply and will expire SIX (6) MONTHS from the mailing date of this communication.
- Failure to reply within the set or extended period for reply will, by statute, cause the application to become ABANDONED (35 U.S.C. § 133). Any reply received by the Office later than three months after the mailing date of this communication, even if timely filed, may reduce any earned patent term adjustment. See 37 CFR 1.704(b).

Status

1)☒ Responsive to communication(s) filed on *05/12/2014*.

☐ A declaration(s)/affidavit(s) under **37 CFR 1.130(b)** was/were filed on _____.

2a)☐ This action is **FINAL**. 2b)☒ This action is non-final.

3)☐ An election was made by the applicant in response to a restriction requirement set forth during the interview on _____; the restriction requirement and election have been incorporated into this action.

4)☐ Since this application is in condition for allowance except for formal matters, prosecution as to the merits is closed in accordance with the practice under *Ex parte Quayle*, 1935 C.D. 11, 453 O.G. 213.

Disposition of Claims*

5)☒ Claim(s) *1-40* is/are pending in the application.

5a) Of the above claim(s) _____ is/are withdrawn from consideration.

6)☐ Claim(s) _____ is/are allowed.

7)☒ Claim(s) *1-40* is/are rejected.

8)☐ Claim(s) _____ is/are objected to.

9)☐ Claim(s) _____ are subject to restriction and/or election requirement.

* If any claims have been determined allowable, you may be eligible to benefit from the **Patent Prosecution Highway** program at a participating intellectual property office for the corresponding application. For more information, please see http://www.uspto.gov/patents/init_events/pph/index.jsp or send an inquiry to PPHfeedback@uspto.gov.

Application Papers

10)☐ The specification is objected to by the Examiner.

11)☐ The drawing(s) filed on _____ is/are: a)☐ accepted or b)☐ objected to by the Examiner.

Applicant may not request that any objection to the drawing(s) be held in abeyance. See 37 CFR 1.85(a).

Replacement drawing sheet(s) including the correction is required if the drawing(s) is objected to. See 37 CFR 1.121(d).

Priority under 35 U.S.C. § 119

12)☐ Acknowledgment is made of a claim for foreign priority under 35 U.S.C. § 119(a)-(d) or (f).

Certified copies:

a)☐ All b)☐ Some** c)☐ None of the:

1.☐ Certified copies of the priority documents have been received.

2.☐ Certified copies of the priority documents have been received in Application No. _____.

3.☐ Copies of the certified copies of the priority documents have been received in this National Stage application from the International Bureau (PCT Rule 17.2(a)).

** See the attached detailed Office action for a list of the certified copies not received.

Attachment(s)

1) ☒ Notice of References Cited (PTO-892)

2) ☒ Information Disclosure Statement(s) (PTO/SB/08a and/or PTO/SB/08b) Paper No(s)/Mail Date *05/12/2014 and 09/16/2014*.

3) ☐ Interview Summary (PTO-413) Paper No(s)/Mail Date. _____ .

4) ☐ Other: _____.

1. The present application is being examined under the pre-AIA first to invent provisions.

DETAILED ACTION

Claim Rejections - 35 USC § 112

2. The following is a quotation of 35 U.S.C. 112(b):

> (b) CONCLUSION.—The specification shall conclude with one or more claims particularly pointing out and distinctly claiming the subject matter which the inventor or a joint inventor regards as the invention.

The following is a quotation of 35 U.S.C. 112 (pre-AIA), second paragraph:

> The specification shall conclude with one or more claims particularly pointing out and distinctly claiming the subject matter which the applicant regards as his invention.

3. Claim 10 is rejected under 35 U.S.C. 112(b) or 35 U.S.C. 112 (pre-AIA), second paragraph, as being indefinite for failing to particularly point out and distinctly claim the subject matter which the inventor or a joint inventor, or for pre-AIA the applicant regards as the invention.

4. Claim 10 recites the limitation "the multi-outcome wagering game" in line 1. There is insufficient antecedent basis for these limitations in the claims.

Double Patenting

5. The nonstatutory double patenting rejection is based on a judicially created doctrine grounded in public policy (a policy reflected in the statute) so as to prevent the unjustified or improper time wise extension of the “right to exclude” granted by a patent and to prevent possible harassment by multiple assignees. A nonstatutory double patenting rejection is appropriate where the claims at issue are not identical, but at least one examined application claim is not patentably distinct from the reference claim(s) because the examined application

claim is either anticipated by, or would have been obvious over, the reference claim(s). See, e.g., *In re Berg*, 140 F.3d 1428, 46 USPQ2d 1226 (Fed. Cir. 1998); *In re Goodman*, 11 F.3d 1046, 29 USPQ2d 2010 (Fed. Cir. 1993); *In re Longi*, 759 F.2d 887, 225 USPQ 645 (Fed. Cir. 1985); *In re Van Ornum*, 686 F.2d 937, 214 USPQ 761 (CCPA 1982); *In re Vogel*, 422 F.2d 438, 164 USPQ 619 (CCPA 1970); and *In re Thorington*, 418 F.2d 528, 163 USPQ 644 (CCPA 1969).

A timely filed terminal disclaimer in compliance with 37 CFR 1.321(c) or 1.321(d) may be used to overcome an actual or provisional rejection based on a nonstatutory double patenting ground provided the reference application or patent either is shown to be commonly owned with this application, or claims an invention made as a result of activities undertaken within the scope of a joint research agreement. A terminal disclaimer must be signed in compliance with 37 CFR 1.321(b).

The USPTO internet Web site contains terminal disclaimer forms which may be used. Please visit http://www.uspto.gov/forms/. The filing date of the application will determine what form should be used. A web-based eTerminal Disclaimer may be filled out completely online using web-screens. An eTerminal Disclaimer that meets all requirements is auto-processed and approved immediately upon submission. For more information about eTerminal Disclaimers, refer to http://www.uspto.gov/patents/process/file/efs/guidance/eTD-info-I.jsp.

6. Claims 1-40 are rejected on the ground of nonstatutory double patenting as being unpatentable over claims 1-30 of U.S. Patent No. 8,721,439. Although the claims at issue are not identical, they are not patentably distinct from each other because they both describe a wagering event for one or more players, where a player is presented with at least one of a buy-out and a partial buy-out offer, comprising initiating at least one of a buy-out offer and partial buy-out

offer to any number of the one or more players that are eligible to win, and further identifying any acceptances of said at least one of a buy-out offer and partial buy-out offer that have been initiated.

7. Claims 1-30 of the US Patent 8,721,439, discloses every element and limitation of Claims 1-40 of the present application. The difference however is that the present application's claims have fewer elements that the US Patent, and hence appears to be broader in scope and is therefore an obvious variant thereof of US Patent 8,721,439.

This is therefore an obviousness-type double patenting rejection.

8. Claims 1-40 are provisionally rejected on the ground of nonstatutory double patenting as being unpatentable over claims 1-31 of copending Application No. 14/449,541. Although the claims at issue are not identical, they are not patentably distinct from each other because they both describe an event for one or more players, where a player is presented with at least one of a buy-out and a partial buy-out offer, comprising initiating at least one of a buy-out offer and partial buy-out offer to any number of the one or more players that are eligible to win, and further identifying any acceptances of said at least one of a buy-out offer and partial buy-out offer that have been initiated.

This is a provisional nonstatutory double patenting rejection because the patentably indistinct claims have not in fact been patented.

Claim Rejections - 35 USC § 102

9. In the event the determination of the status of the application as subject to AIA 35 U.S.C. 102 and 103 (or as subject to pre-AIA 35 U.S.C. 102 and 103) is incorrect, any correction of the statutory basis for the rejection will not be considered a new ground of rejection if the prior art relied upon, and the rationale supporting the rejection, would be the same under either status.

10. The following is a quotation of the appropriate paragraphs of pre-AIA 35 U.S.C. 102 that form the basis for the rejections under this section made in this Office action:

> A person shall be entitled to a patent unless –
>
> (b) the invention was patented or described in a printed publication in this or a foreign country or in public use or on sale in this country, more than one year prior to the date of application for patent in the United States.

11. Claims 1-40 are rejected under pre-AIA 35 U.S.C. 102(b) as being clearly anticipated by Acres (US 2011/0136566).

Regarding claims 1-40: Acres discloses a wagering event for one or more players, wherein a player is presented with at least one of a buy-out and partial offer prior to completion of the wagering event. In particular, Acres discloses initiating at least a buy-out offer to an eligible player based on the anticipated expected outcome of the player during the course of the game. Additionally for example in paragraph [0071], Acres teaches the player may be offered a flat payment, varying buy-out amount either randomly or in proportion to the potential win. Further Acres teaches that a player may choose to accept the buy-out offer or refuse the offer and play the game the traditional way, where the player are eligible to win monetary awards, virtual currency, etc. (see entire disclosure of Acres).

Conclusion

12. Any inquiry concerning this communication or earlier communications from the examiner should be directed to Adetokunbo O. Torimiro whose telephone number is (571) 270-1345. The examiner can normally be reached on Mon-Fri (8am - 4pm).

If attempts to reach the examiner by telephone are unsuccessful, the examiner's supervisor, David Lewis can be reached on (571) 272-7673. The fax phone number for the organization where this application or proceeding is assigned is 571-273-8300.

Information regarding the status of an application may be obtained from the Patent Application Information Retrieval (PAIR) system. Status information for published applications may be obtained from either Private PAIR or Public PAIR. Status information for unpublished applications is available through Private PAIR only. For more information about the PAIR system, see http://pair-direct.uspto.gov. Should you have questions on access to the Private PAIR system, contact the Electronic Business Center (EBC) at 866-217-9197 (toll-free). If you would like assistance from a USPTO Customer Service Representative or access to the automated information system, call 800-786-9199 (IN USA OR CANADA) or 571-272-1000.

/ADETOKUNBO O TORIMIRO/
Primary Examiner, Art Unit 3714

Notice of References Cited	Application/Control No. 14/275,136	Applicant(s)/Patent Under Reexamination MARANTELLI, BERNARD J.	
	Examiner ADETOKUNBO O. TORIMIRO	Art Unit 3714	Page 1 of 1

U.S. PATENT DOCUMENTS

*		Document Number Country Code-Number-Kind Code	Date MM-YYYY	Name	Classification
*	A	US-2011/0136566	06-2011	Acres, John F.	463/22
	B	US-			
	C	US-			
	D	US-			
	E	US-			
	F	US-			
	G	US-			
	H	US-			
	I	US-			
	J	US-			
	K	US-			
	L	US-			
	M	US-			

FOREIGN PATENT DOCUMENTS

*		Document Number Country Code-Number-Kind Code	Date MM-YYYY	Country	Name	Classification
	N					
	O					
	P					
	Q					
	R					
	S					
	T					

NON-PATENT DOCUMENTS

*		Include as applicable: Author, Title Date, Publisher, Edition or Volume, Pertinent Pages)
	U	
	V	
	W	
	X	

*A copy of this reference is not being furnished with this Office action. (See MPEP § 707.05(a).)
Dates in MM-YYYY format are publication dates. Classifications may be US or foreign.

Index of Claims	Application/Control No.	Applicant(s)/Patent Under Reexamination
	14275136	MARANTELLI, BERNARD J.
	Examiner	**Art Unit**
	ADETOKUNBO O TORIMIRO	3714

✓	Rejected	-	Cancelled	N	Non-Elected	A	Appeal
=	Allowed	÷	Restricted	I	Interference	O	Objected

☐ Claims renumbered in the same order as presented by applicant ☐ CPA ☐ T.D. ☐ R.1.47

CLAIM		DATE								
Final	Original	09/18/2014								
	1	✓								
	2	✓								
	3	✓								
	4	✓								
	5	✓								
	6	✓								
	7	✓								
	8	✓								
	9	✓								
	10	✓								
	11	✓								
	12	✓								
	13	✓								
	14	✓								
	15	✓								
	16	✓								
	17	✓								
	18	✓								
	19	✓								
	20	✓								
	21	✓								
	22	✓								
	23	✓								
	24	✓								
	25	✓								
	26	✓								
	27	✓								
	28	✓								
	29	✓								
	30	✓								
	31	✓								
	32	✓								
	33	✓								
	34	✓								
	35	✓								
	36	✓								

Index of Claims	Application/Control No.	Applicant(s)/Patent Under Reexamination
	14275136	MARANTELLI, BERNARD J.
	Examiner	**Art Unit**
	ADETOKUNBO O TORIMIRO	3714

✓	Rejected	-	Cancelled	N	Non-Elected	A	Appeal
=	Allowed	÷	Restricted	I	Interference	O	Objected

☐ Claims renumbered in the same order as presented by applicant ☐ CPA ☐ T.D. ☐ R.1.47

CLAIM		DATE								
Final	Original	09/18/2014								
	37	✓								
	38	✓								
	39	✓								
	40	✓								

Form PTO-1449 US DEPARTMENT OF COMMERCE PATENT AND TRADEMARK OFFICE	ATTY. DOCKET NO. COB-13-1044CIP3-CON	SERIAL NO. 14/275,136
	APPLICANT Bernard J. Marantelli	
LIST OF PUBLICATIONS CITED BY APPLICANT *(Use several sheets if necessary)*	FILING DATE May 12, 2014	GROUP

US PATENT DOCUMENTS

EXAMINER INITIAL*		DOCUMENT NUMBER	DATE	NAME	CLASS	SUBCLASS	FILING DATE IF APPROPRIATE
	AA	2003/0078093 A1	04/24/03	Simms et al.			
	AB	2003/0040360 A1	02/27/03	Kaminkow			
	AC	7,963,838 B2	06/21/11	Gauselmann			
	AD						
	AE						
	AF						
	AG						
	AH						
	AI						
	AJ						
	AK						

FOREIGN PATENT DOCUMENTS

		DOCUMENT NUMBER	DATE	COUNTRY	CLASS	SUBCLASS	TRANSLATION YES	TRANSLATION NO
	AL	2011205028 A1	08/18/11	AU				
	AM							
	AN							
	AO							
	AP							

OTHER PUBLICATIONS (Including Author, Title, Date, Pertinent Pages, Etc.)

	AR	A copy of the Written Opinion and International Search Report issued on September 4, 2014 in corresponding International Application No. PCT/IB2013/002965.
	AS	
	AT	

EXAMINER	/Adetokunbo Torimiro/	DATE CONSIDERED	09/18/2014

*EXAMINER: Initial if publication considered, whether or not citation is in conformance with MPEP 609; Draw line through citation if not in conformance and not considered. Include copy of this form with next communication to Applicant.

EAST\82766797.1

ALL REFERENCES CONSIDERED EXCEPT WHERE LINED THROUGH. /AT/

Search Notes	Application/Control No.	Applicant(s)/Patent Under Reexamination
	14275136	MARANTELLI, BERNARD J.
	Examiner	**Art Unit**
	ADETOKUNBO O TORIMIRO	3714

CPC- SEARCHED		
Symbol	**Date**	**Examiner**
G07F3244,3255 (in combination with text search)	9/18/2014	AT
G07F17/32,3225,3293 (in combination with text search)	9/18/2014	AT
G07F17/323,3262 (in combination with text search)	9/18/2014	AT
A63F9/24, A63F13/00 (in combination with text search)	9/18/2014	AT

CPC COMBINATION SETS - SEARCHED		
Symbol	**Date**	**Examiner**

US CLASSIFICATION SEARCHED			
Class	**Subclass**	**Date**	**Examiner**
463	20,22,25,28,40,42	9/18/2014	AT

SEARCH NOTES		
Search Notes	**Date**	**Examiner**
-Inventor Name Search	9/18/2014	AT
-Assignee Search	9/18/2014	AT
-East Text Search	9/18/2014	AT
-Plus Search	9/18/2014	AT
-Backward/Forward Search	9/18/2014	AT

INTERFERENCE SEARCH			
US Class/ CPC Symbol	**US Subclass / CPC Group**	**Date**	**Examiner**

/ADETOKUNBO O TORIMIRO/ Examiner.Art Unit 3714	

UNITED STATES PATENT AND TRADEMARK OFFICE

UNITED STATES DEPARTMENT OF COMMERCE
United States Patent and Trademark Office
Address: COMMISSIONER FOR PATENTS
P.O. Box 1450
Alexandria, Virginia 22313-1450
www.uspto.gov

BIB DATA SHEET

CONFIRMATION NO. 9997

SERIAL NUMBER	FILING or 371(c) DATE	CLASS	GROUP ART UNIT	ATTORNEY DOCKET NO.
14/275,136	05/12/2014 **RULE**	463	3714	COB-13-1044CIP3-CON

APPLICANTS
Diogenes Limited, Douglas, ISLE OF MAN, Assignee (with 37 CFR 1.172 Interest);

INVENTORS
Bernard J. Marantelli, London, UNITED KINGDOM;

**** CONTINUING DATA ***************************
This application is a CON of 13/958,028 08/02/2013 PAT 8721439
which is a CIP of 13/605,813 09/06/2012 PAT 8602884

**** FOREIGN APPLICATIONS ****************************

**** IF REQUIRED, FOREIGN FILING LICENSE GRANTED **** ** SMALL ENTITY **
05/23/2014

Foreign Priority claimed	35 USC 119(a-d) conditions met	Verified and Acknowledged	Met after Allowance	STATE OR COUNTRY	SHEETS DRAWINGS	TOTAL CLAIMS	INDEPENDENT CLAIMS
☐ Yes ☑ No	☐ Yes ☑ No	/ADETOKUNBO OLUSEGUN TORIMIRO/ (Examiner's Signature)	☐ (Initials)	UNITED KINGDOM	5	40	4

ADDRESS

IP GROUP OF DLA PIPER LLP (US)
ONE LIBERTY PLACE
1650 MARKET ST, SUITE 4900
PHILADELPHIA, PA 19103
UNITED STATES

TITLE

WAGERING APPARATUS, METHODS AND SYSTEMS

FILING FEE RECEIVED		
1740	FEES: Authority has been given in Paper No._____ to charge/credit DEPOSIT ACCOUNT No._____ for following:	☐ All Fees ☐ 1.16 Fees (Filing) ☐ 1.17 Fees (Processing Ext. of time) ☐ 1.18 Fees (Issue) ☐ Other _____ ☐ Credit

Receipt date: 05/12/2014 14275136 - GAU: 3714

Form PTO-1449 US DEPARTMENT OF COMMERCE PATENT AND TRADEMARK OFFICE	ATTY. DOCKET NO. COB-13-1044CIP3-CON	SERIAL NO.
	APPLICANT Bernard J. Marantelli	
LIST OF PUBLICATIONS CITED BY APPLICANT *(Use several sheets if necessary)*	FILING DATE herewith	GROUP

US PATENT DOCUMENTS

EXAMINER INITIAL*		DOCUMENT NUMBER	DATE	NAME	CLASS	SUBCLASS	FILING DATE IF APPROPRIATE
	AA	2006/0237905 A1	10/26/06	Nicely et al.			
	AB	7,811,164 B1	10/12/10	Fox			
	AC	7,901,281 B2	03/08/11	Breslo			
	AD	8,602,884 B1	12/10/13	Marantelli			
	AE	2005/0116410 A1	06/02/05	Vlazny et al.			
	AF	2008/0153579 A1	06/26/08	Brenner et al.			
	AG	8,105,149 B2	01/31/12	DeWaal			
	AH	7,942,735 B2	05/17/11	Meyer et al.			
	AI	7,883,403 B2	02/08/11	Low et al.			
	AJ						
	AK						

FOREIGN PATENT DOCUMENTS

		DOCUMENT NUMBER	DATE	COUNTRY	CLASS	SUBCLASS	TRANSLATION YES	TRANSLATION NO
	AL							
	AM							
	AN							
	AO							
	AP							

OTHER PUBLICATIONS (Including Author, Title, Date, Pertinent Pages, Etc.)

	AR	A copy of GB Patent Application No. 1215708.7 filed September 4, 2012 with Filing Receipt.
		A copy of International Search Report and the Written Opinion of the International Searching Authority dated January 24, 2014 for International Application No. PCT/IB2013/002377.
	AS	A copy of International Search Report and the International Written Opinion dated April 24, 2014 for corresponding International Application No. PCT/IB2013/002962.
		A copy of International Search Report and the International Written Opinion dated April 25, 2014 for corresponding International Application No. PCT/IB2013/003028.
	AT	

EXAMINER	/Adetokunbo Torimiro/	DATE CONSIDERED	09/18/2014

*EXAMINER: Initial if publication considered, whether or not citation is in conformance with MPEP 609; Draw line through citation if not in conformance and not considered. Include copy of this form with next communication to Applicant.

EAST\76249794.1

ALL REFERENCES CONSIDERED EXCEPT WHERE LINED THROUGH. /AT/

EAST Search History

EAST Search History (Prior Art)

Ref #	Hits	Search Query	DBs	Default Operator	Plurals	Time Stamp
L1	6026	G07F17/3244,3255.cpc.	US-PGPUB; USPAT	SAME	ON	2014/09/18 11:21
L2	7893	G07F17/3244,3255,3293.cpc.	US-PGPUB; USPAT	SAME	ON	2014/09/18 11:21
L3	16	G07F17/3244,3255,3293.cpc. and buy adj out	US-PGPUB; USPAT	SAME	ON	2014/09/18 11:21
L4	597	G07F17/3244,3255,3293.cpc. and ((buy adj out) or consolation)	US-PGPUB; USPAT	SAME	ON	2014/09/18 11:22
L5	1110	A63F9/24.cpc.	US-PGPUB; USPAT	SAME	ON	2014/09/18 11:23
L6	1	A63F9/24.cpc. and buy adj out	US-PGPUB; USPAT	SAME	ON	2014/09/18 11:23
L7	2032	A63F13/00.cpc.	US-PGPUB; USPAT	SAME	ON	2014/09/18 11:23
L8	7	A63F13/00.cpc. and buy adj out	US-PGPUB; USPAT	SAME	ON	2014/09/18 11:23
S551	9	marantelli.in.	US-PGPUB; USPAT	SAME	ON	2014/09/18 08:14
S552	50	buy adj out offer	US-PGPUB; USPAT	SAME	ON	2014/09/18 08:16
S553	16	buy adj out offer (wager$3 or bet or betting or gambling or gaming or game)	US-PGPUB; USPAT	SAME	ON	2014/09/18 08:17
S554	26	buy adj out offer and (wager$3 or bet or betting or gambling or gaming or game)	US-PGPUB; USPAT	SAME	ON	2014/09/18 08:24
S555	286	A63F9/24.cpc. and wager$3	US-PGPUB; USPAT	SAME	ON	2014/09/18 08:29
S556	1110	A63F9/24.cpc.	US-PGPUB; USPAT	SAME	ON	2014/09/18 08:30
S557	1	A63F9/24.cpc. and buy adj out	US-PGPUB; USPAT	SAME	ON	2014/09/18 08:30
S558	15862	G07F17/32.cpc.	US-PGPUB;	SAME	ON	2014/09/18 09:15

			USPAT			
S559	21	G07F17/32.cpc. and buy adj out	US-PGPUB; USPAT	SAME	ON	2014/09/18 09:16
S560	553	G07F17/3225.cpc.	US-PGPUB; USPAT	SAME	ON	2014/09/18 09:43
S561	0	G07F17/3225.cpc. and buy adj out	US-PGPUB; USPAT	SAME	ON	2014/09/18 09:43
S562	27	G07F17/3225.cpc. and consolation	US-PGPUB; USPAT	SAME	ON	2014/09/18 09:44
S563	3599	G07F17/323,3262.cpc.	US-PGPUB; USPAT	SAME	ON	2014/09/18 09:44
S564	0	G07F17/323,3262.cpc. and buy adj out	US-PGPUB; USPAT	SAME	ON	2014/09/18 09:45
S565	68	G07F17/323,3262.cpc. and opt adj out	US-PGPUB; USPAT	SAME	ON	2014/09/18 09:45

9/18/2014 11:24:38 AM

PLUS Search Results for S/N 14275136, Searched Thu Sep 18 14:02:14 EDT 2014

The Patent Linguistics Utility System (PLUS) is a USPTO automated search system for U.S. Patents from 1971 to the present PLUS is a query-by-example search system which produces a list of patents that are most closely related linguistically to the application searched. This search was prepared by the staff of the Scientific and Technical Information Center, SIRA.

8721438 99
8721439 99
8734241 99
20140066158 99
20140066171 99
20140066185 99
20140256414 99
7878901 81
7878901 81
20140024437 81
7306517 74
8393948 74
20090069090 74
20120202587 74
20070213124 70
20080026816 70
7326114 69
7862424 69
7862424 69
8157642 69
20040038729 69
20040210507 69
20050054413 69
20100255899 69
20110223987 69
20130012303 69
20130102374 69
20140057707 69
6474649 66
7070505 66
7255351 66
7533886 66
8251791 66
8734220 66
8834261 66
20030011127 66
20050035548 66
20070149267 66
20080042354 66
20080113771 66
20130225262 66
20140087856 66
6783458 66
6786824 66
6863607 66
6942568 66
7552927 66
7662040 66
7931531 66
8043153 66

Form PTO-1449 US DEPARTMENT OF COMMERCE PATENT AND TRADEMARK OFFICE	ATTY. DOCKET NO. COB-13-1044CIP3-CON	SERIAL NO. 14/275,136
	APPLICANT Bernard J. Marantelli	
LIST OF PUBLICATIONS CITED BY APPLICANT *(Use several sheets if necessary)*	FILING DATE May 12, 2014	GROUP

US PATENT DOCUMENTS

EXAMINER INITIAL*		DOCUMENT NUMBER	DATE	NAME	CLASS	SUBCLASS	FILING DATE IF APPROPRIATE
	AA	2003/0078093 A1	04/24/03	Simms et al.			
	AB	2003/0040360 A1	02/27/03	Kaminkow			
	AC	7,963,838 B2	06/21/11	Gauselmann			
	AD						
	AE						
	AF						
	AG						
	AH						
	AI						
	AJ						
	AK						

FOREIGN PATENT DOCUMENTS

		DOCUMENT NUMBER	DATE	COUNTRY	CLASS	SUBCLASS	TRANSLATION YES	TRANSLATION NO
	AL	2011205028 A1	08/18/11	AU				
	AM							
	AN							
	AO							
	AP							

OTHER PUBLICATIONS (Including Author, Title, Date, Pertinent Pages, Etc.)

	AR	A copy of the Written Opinion and International Search Report issued on September 4, 2014 in corresponding International Application No. PCT/IB2013/002965.
	AS	
	AT	

EXAMINER	DATE CONSIDERED

*EXAMINER: Initial if publication considered, whether or not citation is in conformance with MPEP 609; Draw line through citation if not in conformance and not considered. Include copy of this form with next communication to Applicant.

PATENT COOPERATION TREATY

From the:
INTERNATIONAL SEARCHING AUTHORITY

To:

FISHER ADAMS KELLY
Level 29
12 Creek Street
Brisbane, QLD 4000
Australia

PCT

WRITTEN OPINION OF THE
INTERNATIONAL SEARCHING AUTHORITY

(PCT Rule 43*bis*.1)

Date of mailing *(day/month/year)*
04 September 2014

Applicant's or agent's file reference
28101PC1-ERG/S/W

FOR FURTHER ACTION
See paragraph 2 below

International application No.	International filing date *(day/month/year)*	Priority date *(day/month/year)*
PCT/IB2013/002965	20 August 2013	02 August 2013

International Patent Classification (IPC) or both national classification and IPC
A63F 13/45 (2014.01) A63F 13/00 (2014.01)

Applicant
DIOGENES LIMITED

1. This opinion contains indications relating to the following items:

- [X] Box No. I — Basis of the opinion
- [ ] Box No. II — Priority
- [ ] Box No. III — Non-establishment of opinion with regard to novelty, inventive step and industrial applicability
- [ ] Box No. IV — Lack of unity of invention
- [X] Box No. V — Reasoned statement under Rule 43*bis*.1(a)(i) with regard to novelty, inventive step and industrial applicability; citations and explanations supporting such statement
- [ ] Box No. VI — Certain documents cited
- [ ] Box No. VII — Certain defects in the international application
- [X] Box No. VIII — Certain observations on the international application

2. **FURTHER ACTION**

If a demand for international preliminary examination is made, this opinion will be considered to be a written opinion of the International Preliminary Examining Authority ("IPEA") except that this does not apply where the applicant chooses an Authority other than this one to be the IPEA and the chosen IPEA has notified the International Bureau under Rule 66.1*bis*(b) that written opinions of this International Searching Authority will not be so considered.

If this opinion is, as provided above, considered to be a written opinion of the IPEA, the applicant is invited to submit to the IPEA a written reply together, where appropriate, with amendments, before the expiration of 3 months from the date of mailing of Form PCT/ISA/220 or before the expiration of 22 months from the priority date, whichever expires later.

For further options, see Form PCT/ISA/220.

Name and mailing address of the ISA	Date of completion of this opinion	**Authorised Officer**
AUSTRALIAN PATENT OFFICE PO BOX 200, WODEN ACT 2606, AUSTRALIA Email address: pct@ipaustralia.gov.au	4 September 2014	Cade McTaggart AUSTRALIAN PATENT OFFICE (ISO 9001 Quality Certified Service) Telephone No. 0262837926

WRITTEN OPINION OF THE INTERNATIONAL SEARCHING AUTHORITY

International application No.

PCT/IB2013/002965

Box No. I **Basis of this opinion**

1. With regard to the **language**, this opinion has been established on the basis of:

   [X] The international application in the language in which it was filed

   [ ] A translation of the international application into, , which is the language of a translation furnished for the purposes of international search (under Rules 12.3(a) and 23.1(b)).

2. [ ] This opinion has been established taking into account **the rectification of an obvious mistake** authorized by or notified to this Authority under Rule 91 (Rule 43*bis*.1(a))

3. With regard to any **nucleotide and/or amino acid sequence** disclosed in the international application, this opinion has been established on the basis of a sequence listing filed or furnished:

   a. (means)

   [ ] on paper

   [ ] in electronic form

   b. (time)

   [ ] in the international application as filed

   [ ] together with the international application in electronic form

   [ ] subsequently to this Authority for the purposes of search

4. [ ] In addition, in the case that more than one version or copy of a sequence listing has been filed or furnished, the required statements that the information in the subsequent or additional copies is identical to that in the application as filed or does not go beyond the application as filed, as appropriate, were furnished.

5. Additional comments:

WRITTEN OPINION OF THE INTERNATIONAL SEARCHING AUTHORITY	International Application No. PCT/IB2013/002965

Box No. V **Reasoned statement under Rule 43*bis*.1(a)(i) with regard to novelty, inventive step or industrial applicability; citations and explanations supporting such statement**

1. Statement

Novelty (N)	Claims 1-30	YES
	Claims None	NO
Inventive step (IS)	Claims 1-30	YES
	Claims None	NO
Industrial applicability (IA)	Claims 1-30	YES
	Claims None	NO

2. CITATIONS AND EXPLANATIONS:

CITATIONS

D1: US 2003/0078093 A1 (SIMMS et al.) 24 April 2003
D2: US 2003/0040360 A1 (KAMINKOW) 27 February 2003
D3: US 8105149 B2 (DEWAAL) 31 January 2012
D4: US 7963838 B2 (GAUSELMANN) 21 June 2011
D5: US 7883403 B2 (LOW et al.) 08 February 2011
D6: US 7942735 B2 (MEYER et al.) 17 May 2011
D7: AU 2011205028 A1 (ARISTOCRAT TECHNOLOGIES AUSTRALIA PTY LIMITED) 18 August 2011

NOVELTY (N)

Claims 1, 24 and 27 meet the criteria set forth in PCT Article 33(2) for novelty. The prior art published before the priority date does not disclose a wagering system and method to conduct a multi-outcome wagering event comprising one or more slot machine games resulting in a defined number of reel outcomes, and wherein a player is presented with at least one of a buy-out offer and a partial buy-out offer prior to completion of all of the defined number of reel outcomes. Wherein a player accepting the buy-out offer is no longer eligible to exclusively win the at least one jackpot, a player accepting a partial buy-out offer remains eligible to win at least a portion of the at least one jackpot; completing the remainder of the defined number of reel outcomes and determining if any of the players have won the at least one jackpot or portion thereof.

Therefore, the subject matter of claims 1, 24 and 27 is new and meets the requirements of Article 33(2) of the PCT with regard to novelty.

Appended claims 2-23, 25-26 and 28-30 add further features to those defined in claims 1, 24 and 27 and are therefore also novel.

INVENTIVE STEP (IS)

Claims 1, 24 and 27 meet the criteria set out in PCT Article 33(3) with regard to the requirement of Inventive Step because the prior art does not obviously suggest to a person skilled in the art a wagering system and method to conduct a multi-outcome wagering event comprising one or more slot machine games resulting in a defined number of reel outcomes, and wherein a player is presented with at least one of a buy-out offer and a partial buy-out offer prior to completion of all of the defined number of reel outcomes. Wherein a player accepting the buy-out offer is no longer eligible to exclusively win the at least one jackpot, a player accepting a partial buy-out offer remains eligible to win at least a portion of the at least one jackpot; completing the remainder of the defined number of reel outcomes and determining if any of the players have won the at least one jackpot or portion thereof.

The claimed invention is not obvious in the light of any of the cited documents nor is it disclosed in any obvious combination of them. It is also considered that it would not be obvious to a person skilled in the art in the light of common general knowledge either by itself or in combination with any of these documents.

Therefore, the subject matter of claims 1, 24 and 27 is not obvious and meets the requirements of Article 33(3) of the PCT with regard to inventive step.

Claims 2-23, 25-26 and 28-30 embody further aspects of the inventive concept and therefore also meet the requirements of Article 33(3) of the PCT

INDUSTRIAL APPLICABILITY (IA)

The invention defined in the claims is considered to meet the requirements of Industrial Applicability under Article 33(4) of the PCT because it can be made by, or used in, industry.

WRITTEN OPINION OF THE INTERNATIONAL SEARCHING AUTHORITY **Box No. VIII Certain observations in the international application**	International Application No. **PCT/IB2013/002965**

The following observations on the clarity of the claims, description, and drawings or on the question whether the claims are fully supported by the description, are made:

Claim 4 is not clear because I cannot find an antecedent to the phrase 'live or pre-recorded event' when the claim is appended to claim 2. For the purposes of this report claim 4 has been read as appended to claim 3.

PATENT COOPERATION TREATY

PCT

INTERNATIONAL SEARCH REPORT

(PCT Article 18 and Rules 43 and 44)

Applicant's or agent's file reference 28101PC1-ERG/S/W	FOR FURTHER ACTION	see Form PCT/ISA/220 as well as, where applicable, item 5 below.
International application No. **PCT/IB2013/002965**	International filing date *(day/month/year)* 20 August 2013	(Earliest) Priority Date *(day/month/year)* 02 August 2013

Applicant
DIOGENES LIMITED

This international search report has been prepared by this International Searching Authority and is transmitted to the applicant according to Article 18. A copy is being transmitted to the International Bureau.

This international search report consists of a total of **5** sheets.

[ ] It is also accompanied by a copy of each prior art document cited in this report.

1. **Basis of the report**

a. With regard to the **language**, the international search was carried out on the basis of:

[X] The international application in the language in which it was filed.

[ ] A translation of the international application into , which is the language of a translation furnished for the purposes of international search (Rules 12.3(a) and 23.1(b)).

b. [ ] This international search report has been established taking into account the **rectification of an obvious mistake** authorized by or notified to this Authority under Rule 91 (Rule 43.6*bis*(a)).

c. [ ] With regard to any **nucleotide and/or amino acid sequence** disclosed in the international application, see Box No. I.

2. [ ] **Certain claims were found unsearchable** (See Box No. II).

3. [ ] **Unity of invention is lacking** (See Box No. III).

4. With regard to the **title**,

[X] the text is approved as submitted by the applicant.

[ ] the text has been established by this Authority to read as follows:

5. With regard to the **abstract**,

[X] the text is approved as submitted by the applicant.

[ ] the text has been established, according to Rule 38.2, by this Authority as it appears in Box No. IV. The applicant may, within one month from the date of mailing of this international search report, submit comments to this Authority.

6. With regard to the **drawings**,

a. the figure of the **drawings** to be published with the abstract is Figure No. **1**

[X] as suggested by the applicant.

[ ] as selected by this Authority, because the applicant failed to suggest a figure.

[ ] as selected by this Authority, because this figure better characterizes the invention.

b. [ ] none of the figures is to be published with the abstract.

INTERNATIONAL SEARCH REPORT

International application No.
PCT/IB2013/002965

A. CLASSIFICATION OF SUBJECT MATTER

A63F 13/45 (2014.01) A63F 13/00 (2014.01)

According to International Patent Classification (IPC) or to both national classification and IPC

B. FIELDS SEARCHED

Minimum documentation searched (classification system followed by classification symbols)

Documentation searched other than minimum documentation to the extent that such documents are included in the fields searched

Electronic data base consulted during the international search (name of data base and, where practicable, search terms used)

WPI EPODOC IPC: A63F, G07F Keywords: OPT OUT, BUY OUT , CASH OUT , ACCEPT, TAKE, MULTI, OUTCOME, PRIOR, COMPLETE, REEL (and similar terms)
The Lens (www.lens.org) key words: multi, bet, opt out, reel, outcome, gaming machine, carry over champion progressive, jackpot, (and similar terms)
The Lens (www.lens.org) applicant/inventor search

C. DOCUMENTS CONSIDERED TO BE RELEVANT

Category*	Citation of document, with indication, where appropriate, of the relevant passages	Relevant to claim No.
	Documents are listed in the continuation of Box C	

[X] Further documents are listed in the continuation of Box C [X] See patent family annex

* Special categories of cited documents:
"A" document defining the general state of the art which is not considered to be of particular relevance
"E" earlier application or patent but published on or after the international filing date
"L" document which may throw doubts on priority claim(s) or which is cited to establish the publication date of another citation or other special reason (as specified)
"O" document referring to an oral disclosure, use, exhibition or other means
"P" document published prior to the international filing date but later than the priority date claimed
"T" later document published after the international filing date or priority date and not in conflict with the application but cited to understand the principle or theory underlying the invention
"X" document of particular relevance; the claimed invention cannot be considered novel or cannot be considered to involve an inventive step when the document is taken alone
"Y" document of particular relevance; the claimed invention cannot be considered to involve an inventive step when the document is combined with one or more other such documents, such combination being obvious to a person skilled in the art
"&" document member of the same patent family

Date of the actual completion of the international search	Date of mailing of the international search report
4 September 2014	04 September 2014
Name and mailing address of the ISA/AU	**Authorised officer**
AUSTRALIAN PATENT OFFICE PO BOX 200, WODEN ACT 2606, AUSTRALIA Email address: pct@ipaustralia.gov.au	Cade McTaggart AUSTRALIAN PATENT OFFICE (ISO 9001 Quality Certified Service) Telephone No. 0262837926

Form PCT/ISA/210 (fifth sheet) (July 2009)

INTERNATIONAL SEARCH REPORT C (Continuation). DOCUMENTS CONSIDERED TO BE RELEVANT		International application No. PCT/IB2013/002965
Category*	Citation of document, with indication, where appropriate, of the relevant passages	Relevant to claim No.
A	US 2003/0078093 A1 (SIMMS et al.) 24 April 2003	
A	US 2003/0040360 A1 (KAMINKOW) 27 February 2003	
A	US 8105149 B2 (DEWAAL) 31 January 2012	
A	US 7963838 B2 (GAUSELMANN) 21 June 2011	
A	US 7883403 B2 (LOW et al.) 08 February 2011	
A	US 7942735 B2 (MEYER et al.) 17 May 2011	
A	AU 2011205028 A1 (ARISTOCRAT TECHNOLOGIES AUSTRALIA PTY LIMITED) 18 August 2011.	

Form PCT/ISA/210 (fifth sheet) (July 2009)

INTERNATIONAL SEARCH REPORT Information on patent family members	International application No. PCT/IB2013/002965

This Annex lists known patent family members relating to the patent documents cited in the above-mentioned international search report. The Australian Patent Office is in no way liable for these particulars which are merely given for the purpose of information.

Patent Document/s Cited in Search Report		Patent Family Member/s	
Publication Number	**Publication Date**	**Publication Number**	**Publication Date**
US 2003/0078093 A1	24 April 2003	US 7901287 B2	08 Mar 2011
		CA 2405641 A1	28 Mar 2003
		EP 1310924 A2	14 May 2003
US 2003/0040360 A1	27 February 2003	US 7601057 B2	13 Oct 2009
		AU 2002326607 B2	09 Mar 2006
		AU 2003270580 A1	30 Apr 2004
		CA 2460353 A1	06 Mar 2003
		EP 1427491 A1	16 Jun 2004
		US 6506118 B1	14 Jan 2003
		US 2003087693 A1	08 May 2003
		US 6793579 B2	21 Sep 2004
		US 2003064777 A1	03 Apr 2003
		US 6796905 B2	28 Sep 2004
		US 2005032567 A1	10 Feb 2005
		US 7625282 B2	01 Dec 2009
		US 2005037829 A1	17 Feb 2005
		WO 03018153 A1	06 Mar 2003
		WO 2004025581 A2	25 Mar 2004
		ZA 200402282 A	23 Mar 2005
US 8105149 B2	31 January 2012	US 8105149 B2	31 Jan 2012
US 7963838 B2	21 June 2011	US 7963838 B2	21 Jun 2011
		AU 2004242475 A1	28 Jul 2005
		AU 2010241508 A1	09 Dec 2010
		AU 2010241508 B2	22 Sep 2011
		CA 2485773 A1	09 Jul 2005
		EP 1553533 A1	13 Jul 2005
US 7883403 B2	08 February 2011	US 7883403 B2	08 Feb 2011
		AU 2003268306 A1	30 Apr 2004
		GB 2407902 A	11 May 2005
		GB 2407902 B	12 Jul 2006
		US 6425824 B1	30 Jul 2002
		US 2002103020 A1	01 Aug 2002
		US 2002151341 A1	17 Oct 2002
		US 7037192 B2	02 May 2006

Due to data integration issues this family listing may not include 10 digit Australian applications filed since May 2001.

INTERNATIONAL SEARCH REPORT Information on patent family members	International application No. PCT/IB2013/002965

This Annex lists known patent family members relating to the patent documents cited in the above-mentioned international search report. The Australian Patent Office is in no way liable for these particulars which are merely given for the purpose of information.

Patent Document/s Cited in Search Report		Patent Family Member/s	
Publication Number	**Publication Date**	**Publication Number**	**Publication Date**
		US 2003040357 A1	27 Feb 2003
		US 7192344 B2	20 Mar 2007
		US 2006189370 A1	24 Aug 2006
		US 7314410 B2	01 Jan 2008
		US 2007167230 A1	19 Jul 2007
		US 8210929 B2	03 Jul 2012
		US 2007184894 A1	09 Aug 2007
		US 8777712 B2	15 Jul 2014
		US 2011092274 A1	21 Apr 2011
		WO 2004025585 A2	25 Mar 2004
US 7942735 B2	17 May 2011	US 7942735 B2	17 May 2011
		WO 2006099382 A2	21 Sep 2006
AU 2011205028 A1	18 August 2011	None	

End of Annex

Due to data integration issues this family listing may not include 10 digit Australian applications filed since May 2001.

(12) STANDARD PATENT APPLICATION (11) Application No. **AU 2011205028 A1**
(19) AUSTRALIAN PATENT OFFICE

(54) Title
A game method and gaming system

(51) International Patent Classification(s)
A63F 13/10 (1970.01) ***G07F 17/32*** (2006.01)

(21) Application No: **2011205028** (22) Date of Filing: **2011.07.27**

(43) Publication Date: **2011.08.18**
(43) Publication Journal Date: **2011.08.18**

(62) Divisional of:
2010201551

(71) Applicant(s)
Aristocrat Technologies Australia Pty Limited

(72) Inventor(s)
Olive, Scott Christopher

(74) Agent / Attorney
Griffith Hack, Level 3 509 St Kilda Road, Melbourne, VIC, 3004

2011205028 27 Jul 2011

ABSTRACT

A method of gaming comprises displaying a set of objects to a first player, receiving at least one object selection from the first player, receiving an award instruction from a second player specifying an award that the first player can accept or reject, and displaying the award to the first player so that the first player can accept or reject the award.

2011205028 27 Jul 2011

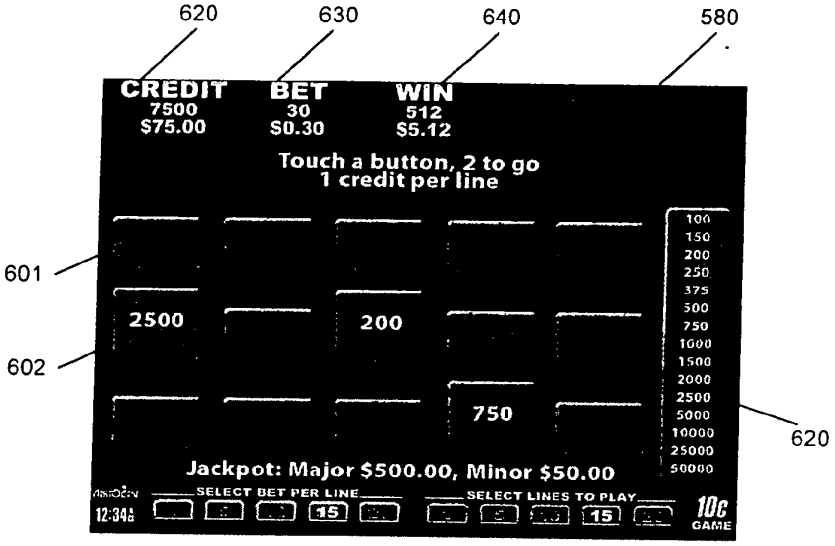

Figure 6

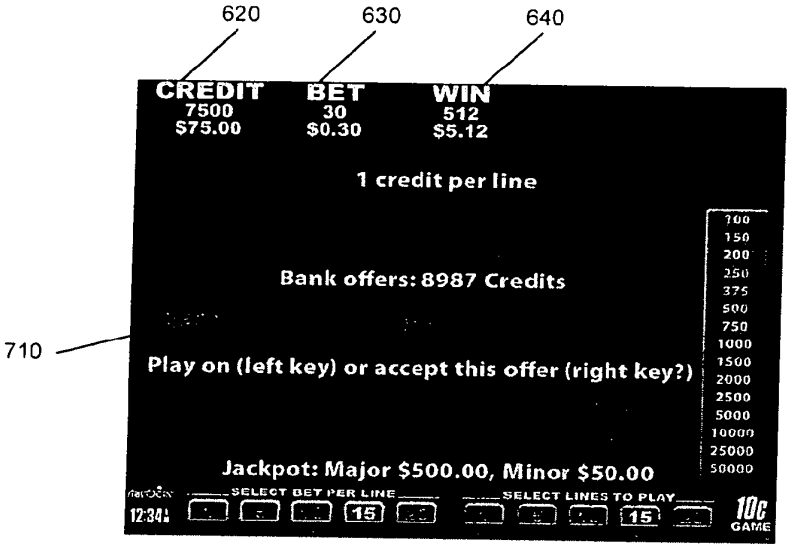

Figure 7

2011205028 27 Jul 2011

AUSTRALIA

Patents Act 1990

COMPLETE SPECIFICATION

Standard Patent

Applicant:

Aristocrat Technologies Australia Pty Limited

Invention Title:

A GAME METHOD AND GAMING SYSTEM

The following statement is a full description of this invention, including the best method for performing it known to me/us:

2011205028 27 Jul 2011

Title

A METHOD OF GAMING AND GAMING SYSTEM

Related Application

This application is a divisional application of Australian application no. 2010201551, the disclosure of which is incorporated herein by reference. Most of the disclosure of that application is also included herein, however, reference may be made to the specification of application no. 2010201551 as filed or accepted to gain further understanding of the invention claimed herein.

Field of the Invention

The present invention relates to a method of gaming, a gaming system, a game controller and a player interface for a gaming system.

Background to the Invention

Many gaming machines carry out a single game such as a slot machine game involving a display of rotating wheels having symbols, where the resulting symbol combinations correspond to prizes to be paid to the player. Many newer gaming machines provide a "bonus" or "feature" game that occurs in response to a particular event in the "base" or "main" game. Such bonus games are intended to add player excitement and enjoyment. There is a need for other games that are suitable to be used as a bonus or main game.

Summary of the Invention

The invention broadly relates to a method of gaming comprising:

(a) displaying a set of objects to a first

player;

(b) receiving at least one object selection from the first player;

(c) receiving an award instruction from a second player specifying an award that the first player can accept or reject;

(d) displaying the award to the first player so that the first player can accept or reject the award.

In an embodiment, the method comprises:

(e) (i) if an acceptance instruction is received from the first player, granting the first player the displayed award or (ii) if a rejection instruction is received from the first player rejecting the displayed award, receiving at least one further object selection instruction from the first player and a further award instruction from the second player specifying an award; and

(f) repeating steps (d) and (e) until (i) an acceptance instruction is received from the first player accepting the displayed award or (ii) another award condition is met.

An award condition may be that a last object remains that corresponds to a last prize.

An award condition may be that a combination of objects has been selected.

In an embodiment, if another award condition has not been met when the first player accepts a displayed award, game play may continue with the second player assuming the role of the first player and making object selections. In this embodiment displayed awards may subsequently be specified by a game controller or another player who assumes the role of the second player.

In an embodiment there may be more than one second player. For example: (i) plural second players entitled to make concurrent award offers or (ii) plural second players entitled to make award offers in turn or (iii) plural second players entitled to take the role of the second player should the second player assume the role of the first player.

The game method may comprise executing a base game and commencing step (a) in response to occurrence of a trigger event in the base game.

The invention also relates to a gaming system comprising:

a first player interface comprising a display for displaying a set of objects to a first player, and an instruction input mechanism that enables a player to input at least one object selection instruction, and, optionally, an award acceptance instruction or an award rejection instruction;

a second player interface comprising an instruction input mechanism to enable a second player to input an award instruction specifying an award to be displayed to a first player; and

a game controller in data communication with the first and second player interfaces and configured to:

(a) cause the display of the first player interface to display to the first player an award based on an award instruction received from the second player that the first player can accept or reject.

In an embodiment, the game controller is configured to:

(b) (i) if an acceptance instruction is received from the first player grant the first player the displayed award or, (ii) if rejection instruction is received from the first player, receive at least one further object selection instructions from a first player, and a further award instruction from a second player

specifying an award to be displayed to a first player, and

the game controller is configured to repeat processes (b) and (c) until (i) an acceptance instruction is received or (ii) another award condition is met.

The invention also relates to a game controller for a gaming system comprising a memory storing a set of objects,

the game controller configured to:

(a) receive (i) at least one object selection instruction from a first player specifying selection of an object from the set of objects, and (ii) an award instruction from a second player specifying an award to be displayed to a first player; and

(b) cause a first player display to display an award based on the received award instruction that the first player can accept or reject.

In an embodiment, the game controller is configured to:

(c) (i) if an acceptance instruction is received specifying that the first player accepts the displayed awards, grant the first player the displayed award or, (ii) if a rejection instruction is received specifying that the first player rejects the displayed award, receive at least one further object selection instruction and a further award instruction from a second player specifying an award to be displayed to a first player, and

the game controller further configured to repeat processes (a), (b) and (c) until (i) an acceptance instruction is received or (ii) another award condition is met.

In a further aspect, the invention broadly relates to a method of gaming comprising:

(i) conducting a first selection round by

(a) displaying a set of objects to a first

player;

(b) receiving at least one object selection from the first player, and

(c) displaying an award to the first player that the first player can accept or reject; and

(ii) conducting at least a second selection round if the first player does not accept the displayed award, the second pick round comprising at least one further object selection being made other than by the first player.

In one embodiment, the further object selection may be made by a game controller.

In another embodiment, the further object selection may be made by a second player.

The invention also relates broadly to a game controller for a gaming system comprising:

a memory for storing a set of objects, the game controller configured to:

(i) conduct a first selection round during which the game controller is configured to:

(a) cause a first player display a set of objects to a first player;

(b) receive at least one object selection instruction from the first player specifying an object of the set of objects and make the object identified by the selection unavailable;

(c) cause the first player display to display an award to the first player that the first player can accept or reject; and

(ii) conduct at least a second selection round if the first player does not accept the displayed award during which at least one further object is selected other than by the first player.

The invention also relates broadly to a gaming system comprising:

a player interface having an instruction input mechanism;

a first player display for displaying a set of objects to a first player; and

a game controller, the game controller configured to:

(i) conduct a first selection round during which the game controller is configured to:

(a) cause a first player display to display a set of objects to a first player;

(b) receive at least one object selection instruction from the first player and make the object identified by the selection unavailable;

(c) cause the first player display to display an award to the first player that the first player can accept or reject; and

(ii) conduct at least a second round if the first player does not accept the displayed award during which at least one further object is selected other than by the first player.

Persons skilled in the art will appreciate that the above methods may be implemented by computer program code executed by a computer. Such program code may be provided on a computer readable medium. Persons skilled in the art will also appreciate that various features of the embodiments may be combined.

Brief Description of the Drawings

Figure 1 is a perspective view of a gaming system in the form of a stand alone gaming machine;

Figure 2 is a schematic diagram of a gaming system;

2011205028 27 Jul 2011

Figure 3 is a schematic diagram illustrating the memory of Figure 2; and

Figure 4 is a schematic diagram of a gaming system having networked gaming machines.

Figure 5 is a block diagram of the functional components of a first embodiment;

Figure 6 is a screen shot of a display during playing of game in accordance with the first embodiment;

Figure 7 is a screen shot of a display during playing of game in accordance with the first embodiment;

Figure 8 is a flowchart corresponding to the first embodiment;

Figure 9 is a block diagram of the functional components of the second embodiment; and

Figure 10 is a block diagram of the functional components of the third embodiment.

Description of the Preferred Embodiments

Referring to the drawings, there is shown a gaming system arranged to implement a game where a player makes object selections which result in prizes becoming unavailable to the player. At various points in the game, the player is offered a prize that the player can accept or reject. The player can accept the prize or reject the prize and continue playing in the hope that they will get a larger prize offered to them. Two player variants of this game are also disclosed. The gaming system can take a number of different forms.

In a first form, a stand alone gaming machine is provided wherein all or most components required for implementing the game are present in a player operable gaming machine.

In a second form, a distributed architecture is provided wherein some of the components required for implementing the game are present in a player operable gaming machine and some of the components required for implementing the game are located remotely relative to the gaming machine. For example, a "thick client" architecture may be used wherein part of the game is executed on a player operable gaming machine and part of the game is executed remotely, such as by a gaming server; or a "thin client" architecture may be used wherein most of the game is executed remotely such as by a gaming server and a player operable gaming machine is used only to display audible and/or visible gaming information to the player and receive gaming inputs from the player.

However, it will be understood that other arrangements are envisaged. For example, an architecture may be provided wherein a gaming machine is networked to a gaming server and the respective functions of the gaming machine and the gaming server are selectively modifiable. For example, the gaming system may operate in stand alone gaming machine mode, "thick client" mode or "thin client" mode depending on the game being played, operating conditions, and so on. Other variations will be apparent to persons skilled in the art.

A gaming system in the form of a stand alone gaming machine 10 is illustrated in Figure 1. The gaming machine 10 includes a console 12 having a display 14 on which is displayed representations of a game 16 that can be played by a player. A mid-trim 20 of the gaming machine 10 houses a bank of buttons 22 for enabling a player to interact with the gaming machine, in particular during

game play. The mid-trim 20 also houses a credit input mechanism 24 which in this example includes a coin input chute 24A and a bill collector 24B. Other credit input mechanisms may also be employed, for example, a card reader for reading a smart card, debit card or credit card. A player marketing module having a reading device may also be provided for the purpose of reading a player tracking device as part of a loyalty program. The player tracking device may be in the form of a card, flash drive or any other portable storage medium capable of being read by the reading device.

A top box 26 may carry artwork 28, including for example pay tables and details of bonus awards and other information or images relating to the game. Further artwork and/or information may be provided on a front panel 29 of the console 12. A coin tray 30 is mounted beneath the front panel 29 for dispensing cash payouts from the gaming machine 10.

The display 14 shown in Figure 1 is in the form of a video display unit, particularly a cathode ray tube screen device. Alternatively, the display 14 may be a liquid crystal display, plasma screen, any other suitable video display unit, or the visible portion of an electromechanical device. The top box 26 may also include a display, for example a video display unit, which may be of the same type as the display 14, or of a different type.

Figure 2 shows a block diagram of operative components of a typical gaming machine which may be the same as or different to the gaming machine of Figure 1.

The gaming machine 100 includes a game controller 101 having a processor 102. Instructions and data to control operation of the processor 102 are stored in a memory 103,

which is in data communication with the processor 102. Typically, the gaming machine 100 will include both volatile and non-volatile memory and more than one of each type of memory, with such memories being collectively represented by the memory 103.

The gaming machine has hardware meters 104 for purposes including ensuring regulatory compliance and monitoring player credit, an input/output (I/O) interface 105 for communicating with peripheral devices of the gaming machine 100. The input/output interface 105 and/or the peripheral devices may be intelligent devices with their own memory for storing associated instructions and data for use with the input/output interface or the peripheral devices. A random number generator module 113 generates random numbers for use by the processor 102. Persons skilled in the art will appreciate that a random number generator may employ a pseudo random number generation scheme. Herein, the term "random" is intended to encompass both truly random and pseudo-random.

In the example shown in Figure 2, a player interface 120 includes peripheral devices that communicate with the game controller 101 including one or more displays 106, a touch screen 107, a card and/or ticket reader 108, a printer 109, a bill acceptor and/or coin input mechanism 110 and a coin output mechanism 111. Additional hardware may be included as part of the gaming machine 100, or hardware may be omitted as required for the specific implementation.

In addition, the gaming machine 100 may include a communications interface, for example a network card 112. The network card may, for example, send status information, accounting information or other information to a central controller, server or database and receive data or commands from the central controller, server or

database.

Figure 3 shows a block diagram of the main components of an exemplary memory 103. The memory 103 includes RAM 103A, EPROM 103B and a mass storage device 103C. The RAM 103A typically temporarily holds program files for execution by the processor 102 and related data. The EPROM 103B may be a boot ROM device and/or may contain some system or game related code. The mass storage device 103C is typically used to store game programs, the integrity of which may be verified and/or authenticated by the processor 102 using protected code from the EPROM 103B or elsewhere.

It is also possible for the operative components of the gaming machine 100 to be distributed, for example input/output devices 106,107,108,109,110,111 to be provided remotely from the game controller 101.

Figure 4 shows a gaming system 200 in accordance with an alternative embodiment. The gaming system 200 includes a network 201, which for example may be an Ethernet network. Gaming machines 202, shown arranged in three banks 203 of two gaming machines 202 in Figure 5, are connected to the network 201. The gaming machines 202 provide a player operable interface and may be the same as the gaming machines 10,100 shown in Figures 2 and 3, or may have simplified functionality depending on the requirements for implementing game play. While banks 203 of two gaming machines are illustrated in Figure 4, banks of one, three or more gaming machines are also envisaged.

One or more displays 204 may also be connected to the network 201. The displays 204 may, for example, be associated with one or more banks 203 of gaming machines. The displays 204 may be used to display representations associated with game play on the gaming machines 202,

and/or used to display other representations, for example promotional or informational material.

In a thick client embodiment, game server 205 implements part of the game played by a player using a gaming machine 202 and the gaming machine 202 implements part of the game. With this embodiment, as both the game server and the gaming device implement part of the game, they collectively provide a game controller. A database management server 206 may manage storage of game programs and associated data for downloading or access by the gaming devices 202 in a database 206A. Typically, if the gaming system enables players to participate in a Jackpot game, a Jackpot server 207 will be provided to monitor and carry out the Jackpot game.

In a thin client embodiment, game server 205 implements most or all of the game played by a player using a gaming machine 202 and the gaming machine 202 essentially provides only the player interface. With this embodiment, the game server 205 provides the game controller. The gaming machine will receive player instructions, pass these to the game server which will process them and return game play outcomes to the gaming machine for display. In a thin client embodiment, the gaming machines could be computer terminals, e.g. PCs running software that provides a player interface operable using standard computer input and output components.

Servers are also typically provided to assist in the administration of the gaming network 200, including for example a gaming floor management server 208, and a licensing server 209 to monitor the use of licenses relating to particular games. An administrator terminal 210 is provided to allow an administrator to run the network 201 and the devices connected to the network.

The gaming network 200 may communicate with other gaming systems, other local networks, for example a corporate network, and/or a wide area network such as the Internet, for example through a firewall 211.

Persons skilled in the art will appreciate that in accordance with known techniques, functionality at the server side of the network may be distributed over a plurality of different computers. For example, elements may be run as a single "engine" on one server or a separate server may be provided. For example, the game server 205 could run a random generator engine. Alternatively, a separate random number generator server could be provided. Further, persons skilled in the art will appreciate that a plurality of games servers could be provided to run different games or a single game server may run a plurality of different games as required by the terminals.

First Embodiment

The gaming system of the first embodiment can be used to implement a game independently or as a "feature" game.

As an additional feature game it can be applied to any style of base game, for example, a spinning or slot game, keno, bingo, a dice game, a card game, a table game, etc.

The main functional components for implementing the first embodiment are illustrated in Figure 5. A gaming system 500 has a game controller 510 and a player interface 550. The game controller 510 has a game processor 520, a random number generator 530 and a memory 540. The player interface 550 has an input mechanism 560, a credit input/output mechanism 570 and a display 580.

The rules for carrying out the game are stored as program

code in memory 540. The code is executed by a game processor 520 in conjunction with player instructions input via input mechanism 560 in order to generate game outcomes.

In order to begin the game, the player inputs credit via credit mechanism 570 and operates input mechanism 560 to indicate they want to play the game. The game processor 520 generates new game data. In each new game, a range of prizes is displayed on a prize display. The player makes selections of objects that could improve or reduce the prize the player receives. Periodically, the player is offered the opportunity to get out of the game by accepting a prize. The prize offered to the player is typically less than some of the available prizes but more than others. Thus, the player has to decide whether to accept the prize or continue the game with the opportunity to obtain a greater prize but with the risk of a lesser prize. A series of objects is displayed to the player. Each time an object is selected, a prize is made unavailable to the player. After a predetermined number of objects have been selected, a prize that the player can accept or reject is displayed on a display.

In order to start each game, the processor 520 generates game data and an initial display displaying all of the objects. The processor 520 obtains the number of objects to be displayed and the set of prizes from memory 540. For example, the program code may specify that there are 15 objects and 15 prizes ranging in value from 100 credits to 50,000 credits. The game processor 520 processes random numbers from random generator 530 in order to randomly associate individual ones of the objects with individual ones of the prizes. The processor 520 then stores initial game data 542A in memory 540 which specifies the characteristics of each object including where they are to be displayed in a first region 582A of

2011205028 27 Jul 2011

display 580 and the prize they are associated with. The processor 520 then controls display 580 to display the objects in a first region 582A of the display 580 and the prizes in a second region 582B of display 580, the display being such that the association of prizes and objects is not apparent to the player.

The processor also determines how many objects are to be selected by a player in a first selection round, for example, three. The processor controls the display 580 in order to display the number of objects selections the player must make to the player. In other embodiments, the number of selections may not be disclosed to the player.

The player then operates object selector 562 to make object selections. The object selector will typically be in the form of a touch screen interface that allows the player to touch any one of the displayed objects in order to select it. The player may additionally be asked to confirm their selection by pressing a portion of the touch interface. Persons skilled in the art will appreciate that other means for selecting the object could also be employed, for example, buttons corresponding to each of the individual objects. Each operation of the object selection causes an object selection instruction to be sent to the processor 520. The processor 520 determines the object to which the selection relates and updates the memory by incorporating additional game data 542B to specify that an object has been selected and to indicate that the prize associated with that object is made unavailable to the player. The processor then updates regions 582A and 582B of display 580 to indicate graphically that an object has been selected and a prize has become unavailable thereby revealing the association between objects and prizes. The processor 520 also updates the display to indicate how many selections now remain in the selection round. For example, if there were

originally three selection in the selection round, the processor 520 updates display 580 to indicate that only two selections remain. Thus, in order to complete the selection round, the player is required to submit two further object selections via object selector 562.

After each object selection, the processor 520 adds additional data 542B and updates display 580. At the end of the selection round, the processor carries out a further process to determine an award to be displayed to the player. The processor determines a value of a prize from the value of the remaining prizes. For example, if each of the prizes are credits, the prize that is offered may be an average of the remaining prizes or some value related mathematically in some other way to the remaining prize or value.

Once the prize has been determined by processor 520 in accordance with the program code stored in memory 540, it is displayed to the player on display 580. The player then must operate either an acceptance selector 564 or a rejection selector 566 in order to enter an acceptance or rejection instruction. Assuming the player initially enters a rejection instruction, the processor 520 determines from memory 540 how many selections are to be made by a player in a second round and displays the number of selections to a player.

Such a scenario is illustrated in the screen shot of Figure 6 where the objects are displayed as fifteen blocks in a major portion of the display 580. It will be recalled from above that three selections were made in a first selection round. The blocks are either rectangular 601 if they have not been selected or larger and square 602 if they have been selected. It will thus be seen from Figure 6 that three blocks have been selected. Each selected block displays the prize that it was associated

with. For example, block 602 indicates that it is associated with a prize of 2,500 credits. A second region 582B of the display towards the right of display 580 contains the set of prizes that were initially available to the player. Those prizes that are now unavailable to the player are shown is a different colour, for example, prize 612 of 2500 credits. The display 580 also displays a current value of the credit meter 620, and a bet amount 630, and a current value of the win meter 640. The display also indicates that a player must select two additional objects in this second selection round. Play continues with the player making two additional object selections using object selector 562.

As described above, processor 520 updates both memory 542B and display 580 to indicate that the objects have been selected and that the prizes associated with them are unavailable. Figure 7 illustrates the display at the end of such a pick round where the processor has determined an offer to be made to the player. Most of the display is "greyed" out. The display includes the text 710 "Bank offers:8987 Credits, Play on (left key) or accept this offer (right key)". Thus, the processor 520 has controlled the display so that the player is displayed a prize of 8987 credits that they can either reject by pressing the left key or accept by pressing the right key.

Game play continues under control of the processor 520 in the same manner as described above until a player enters an acceptance instruction using prize acceptor 564 or a last object remains whereafter the player is awarded a prize corresponding to the last object. If a player accepts a prize, the processor 520, updates of meters 535 including credit meter and win meter to reflect the prize that had been won and controls the display to show the prize won and to update the credit and win meters 620,640.

To further illustrate the invention, reference is now made to the flow chart of Figure 8. Figure 8 proceeds on the assumption that the game is a feature game that may occur after a trigger event. A wide variety of appropriate trigger events are known to persons skilled in the art.

Examples of trigger events are:

- random,
- associated with an advertised combination,
- associated with a non-advertised combination,
- associated with a special bet,
- associated with a time,
- associated with a tournament,
- associated with 1 or more specific game states,
- associated with 1 or more console states,
- specific operator activity, and
- specific player activity.

The trigger can come from the game or a system connected to the game.

After a trigger event occurs, the feature can commence automatically or be prompted by the player pressing a button or the like.

Referring to Figure 8, at step 800 the feature game is triggered. At step 810, the processor 520 populates the game data, associates the objects and prizes and displays the objects on the display for the player to select. At step 820 the processor 520 determines the number of selection rounds and picks for each round. At step 830 the processor 520 determines whether the round is the last round. If it is not the last round, the round is started at step 840. The number of picks remaining for the round is displayed at step 841. At step 842, the player makes a decision as to which object to select by operating the object selector. At step 843, the processor 520

decrements the number of picks remaining for the round. At step 844, the processor 520 animates the object X on the display to reveal the prize P. At step 845, the processor 520 updates the memory and display to show the prizes that has been made unavailable. At step 846, the processor 520 determines whether the number of picks remaining for this round is zero. If it is not zero, the processor 520 repeats steps 841 to 845. If the number of picks remaining is zero at step 847, the processor 520 calculates and displays a prize. At step 850, the processor 520 determines whether the player accepts the prize. If the prize is accepted, the processor 520 awards the prize 860 and updates relevant meters before returning to the main game. If the player rejects the prize the processor 520 increments the round counter 870 and proceeds to step 830.

Processor 520 cycles through steps 830 to step 870 until it determines at step 830 that this is the last round. At step 880, the processor 520 displays the number of picks remaining. At step 882, a player selects an object and the processor 520 processes the received object selection instruction. At step 843, the processor 520 decrements the number of picks remaining. At step 884, the processor 520 animates object X to reveals prize P. At step 885, the processor 520 updates the memory and display to reflect the selection. At step 886, the processor 520 determines whether the number of picks is zero. In the last round, the number of picks being zero will coincide with one prize remaining. The processor 520 cycles through steps 841 to 846 until the number of picks is zero. At this stage, the processor 520 awards the prize associated with the last object of the player by revealing that prize to the player and returns to the main game.

It will be apparent from the above description that in the first preferred embodiment, a single prize is associated

2011205028 27 Jul 2011

with each object. Further, the player can select the objects in any order such that any object may be the last object and the identity of the last object is not known until the player makes a final selection.

Various modifications to the above game are possible. For example, the prizes can have a variety of values as well known in the art including in addition to credit prizes, progressive prizes, non-cash prizes, free games, bonus games, bonus symbols for use in the base game or extra picks.

It is envisaged that the prize on the display is of equal value to the prize revealed. However, in some embodiments the prize on display might be different to the prize revealed. For example, when the player selects an object or prize that is revealed and the prize that is eliminated from the prize display is close in value to the prize in the list of prizes.

Further, the number of objects can be constant for each feature game or can vary. The number of objects can be varied randomly or based on the bets placed by the player. Varying the number of objects can include decreasing or increasing the number. Varying the number of objects can also include swapping an object for another object kept in a reserved space.

Similarly, the number of selection rounds may be constant for each game or can be varied, for example, based on the number of bets, randomly or time when the game is played. Again, the number of selections for each round can be fixed or variable. Variations may be related to which round has been played or the size of the remaining prizes. In one example, if a particular prize, for example the highest prize is made unavailable to the player, a bonus or consolation prize may be provided to the player.

Further, the player may be offered assistance in making the decision to take the prize offered. For example, the machine can display the offer prize but give some indication of the mean value of the remaining prizes.

Two further embodiments will now be described in relation to Figures 9 and 10. In Figures 9 and 10, where elements of substantially the same as those found in Figure 5, the same numbering is used.

Second Embodiment

Referring to Figure 9, there is shown a multiplayer embodiment. Where possible number consistent with the first embodiment is employed. Illustrated in Figure 9 as a first player interface 550 which is the same as used in the interface of Figure 5 and a second player interface 950. While only a single second player interface 950 is shown, is some variations there may be multiple second player interfaces as described in more detail below.

In the embodiment of Figure 9, rather than the processor 520 determining the offers to be displayed to the player of the game who is operating the first player interface (a first player), the offers are made by a second player operating a second player interface 950. The second player interface also includes a credit input mechanism and a display 980 that has first and second regions 982A,982B that display the same information as the first and second regions 582A and 582B of the first player interface. The game proceeds generally as indicated in relation to the first embodiment above until the end of the first object selection round. At this point in the game, the processor 520 causes a message to be displayed on the second player interface 950 to ask the player to enter their "bid". The user calculates a bid they are

prepared to offer and either selects it from a range of possible bids or enters the bid as an award instruction using an award offer selector 968 of input mechanism 960.

Processor 520 then displays this offer on display 580 of the first user interface and the first player can accept or reject the offer in the same manner in which they accept or reject an offer in the first preferred embodiment.

In a variant to the above, there may be multiple second player interfaces and players of each interface may be entitled to enter an offer and a player of the first interface may be entitled to accept any one of the offers. In a further variant, the player of the second interface or the player of each interface may have an option not to enter an offer in which case an offer is made by the game processor 520 instead.

As in the first embodiment, game play may continue through a series of pick rounds in which the first player rejects an offer. If the first player accepts an offer by operating the offer accepter 564, the game may be resolved in a number of ways. In one example, if the first player accepts a second player offer the credit meter of the first player is incremented by the displayed award and the credit meter 935 of the second player is incremented or decremented by the difference between what the second player has offered and an offer calculated by processor 520.

In a variation, the second player whose prize offer has been accepted by the first player is allowed to continue the game with further offers either being made by the game controller or by other second players. At this point, the second player interface operates substantially as per the first player interface, that is, the input functions of

the first player interface become available to the input mechanism 960 of the second player interface. The player continues until they accept a prize and their credit meter is incremented or decremented by the difference between the prize they accept and the prize that the original first player accepted. Various other modifications will be apparent to persons skilled in the art.

It will be appreciated in the above discussion, that in this embodiment, play need not necessarily be able to continue till a last object is selected. That is, it may be terminated at an earlier stage. Further, the number of prizes in this embodiment need not necessarily equal the number of objects.

Third Embodiment

In the embodiment in Figure 10, the second player interface is substantially identical to the first player interface. In this embodiment, the second player interface includes an input mechanism 1060 having an object selector 1062, an acceptance instruction selector 1064, and a rejection instruction selector 1066, a credit mechanism 1070, and a display 1080 having a first display region 1082A and a second display region 1082B, each operating the same as the display regions of the first player interface.

In this embodiment, first and second players operate the first and second player interfaces 550,1050. Processor 520 determines conducts a first selection round where the first player makes selections and is offered awards calculated by the processor 520. If the first player accepts the award offered to them at the end of the first round, the prize is awarded to the first player the meter 535 is incremented. If play continues to the second round, play now switches to the second player interface

2011205028 27 Jul 2011

with the second player making object selection by operating object selector 1062. At the end of the second round, the second player may accept or reject an award. If the player accepts the award, the second player's credit meter 1035 is incremented. Play continues with the players alternating turns until one of the players accepts an award or one of the players is left with the last object.

In a variation to this embodiment based on the second embodiment, the players input mechanisms may be modified to allow the players to input an award mechanism so that they can take turns to offer a prize to be displayed to the other player.

Various other modifications will be apparent to persons skilled in the art, in one example of this embodiment the number of objects may be different to the number of prizes. For example, in one example there might be 20 objects and three prizes and each of the objects are associated with letters such that as each object is selected, a letter is revealed and one of three words is populated, each of which is associated with a prize. For example, one word may be "bad luck" and the prize may be ten credits, a second word may be "winner" and the prize may be 100 credits, and a third word may be "jackpot" and the prize 1,000 credits. As each object is selected, a letter is revealed and one of the words is "populated". Completion of the word leads to the prize associated therewith being awarded to the player that completes that word. Accordingly, it will be appreciate that at least two objects will remain in this example when a player completes a word and maybe more offers are made based on the likelihood on a word being completed.

It will be appreciated the second and third embodiment will typically be conducted in a network gaming

environment such as illustrated in Figure 5. However, persons skilled in the art will appreciate that the third and second embodiment can be carried out on a stand alone gaming machine with players taking it in turns to operate a single interface which is adapted to act as both a first and second player interface, for example, a touch screen interface can be readily reconfigured with a different display in order to allow first and second players to input different instructions.

These and other variations will be apparent to persons skilled in the art as falling within the scope of the invention described herein.

In the claims which follow and in the preceding description of the invention, except where the context requires otherwise due to express language or necessary implication, the word "comprise" or variations such as "comprises" or "comprising" is used in an inclusive sense, i.e. to specify the presence of the stated features but not to preclude the presence or addition of further features in various embodiments of the invention.

2011205028 27 Jul 2011

THE CLAIMS DEFINING THE INVENTION ARE AS FOLLOWS:

1. A method of gaming comprising:

(a) displaying a set of objects to a first player;

(b) receiving at least one object selection from the first player;

(c) receiving an award instruction from a second player specifying an award that the first player can accept or reject; and

(d) displaying the award to the first player so that the first player can accept or reject the award.

2. A method as claimed in claim 1, comprising:

(e) (i) if an acceptance instruction is received from the first player, granting the first player the displayed award or (ii) if a rejection instruction is received from the first player rejecting the displayed award, receiving at least one further object selection instruction from the first player and a further award instruction from the second player specifying an award; and

(f) repeating steps (d) and (e) until (i) an acceptance instruction is received from the first player accepting the displayed award or (ii) another award condition is met.

3. A method as claimed in claim 2, wherein at least one award condition is that a last object remains that corresponds to a last prize.

4. A method as claimed in claim 2 or claim 3 wherein at least one award condition is that a combination of objects has been selected.

5. A method as claimed in any one of claims 1 to 4, wherein if another award condition has not been met when

the first player accepts a displayed award, game play continues with the second player assuming the role of the first player and making object selections.

6. A method as claimed in claim 5, wherein further displayed awards are specified by a game controller.

7. A method as claimed in claim 5 wherein further displayed awards are specified by another player who assumes the role of the second player.

8. A method as claimed in claim 1 wherein there are a plurality of second players.

9. A method as claimed in claim 8 wherein the plurality of second players are entitled to make concurrent award offers.

10. A method as claimed in claim 8 wherein the plurality of second players are entitled to make award offers in turn.

11. A method as claimed in claim 10 wherein the plurality of second players are entitled to take the role of the second player should the second player assume the role of the first player.

12. A method as claimed in any one of claims 1 to 11 comprising executing a base game and commencing step (a) in response to occurrence of a trigger event in the base game.

13. A method as claimed in any one of claims 1 to 12 comprising initially displaying a set of available prizes and making a prize unavailable in response to each object selection.

14. A gaming system comprising:

a first player interface comprising a display for displaying a set of objects to a first player, and an instruction input mechanism that enables a player to input at least one object selection instruction, and, optionally, an award acceptance instruction or an award rejection instruction;

a second player interface comprising an instruction input mechanism to enable a second player to input an award instruction specifying an award to be displayed to a first player; and

a game controller in data communication with the first and second player interfaces and configured to:

(a) cause the display of the first player interface to display to the first player an award based on the award instruction received from the second player that the first player can accept or reject.

15. A gaming system as claimed in claim 14 wherein the game controller is configured to:

(b) (i) if an acceptance instruction is received from the first player grant the first player the displayed award or, (ii) if rejection instruction is received from the first player, receive at least one further object selection instructions from a first player, and a further award instruction from a second player specifying an award to be displayed to a first player, and

the game controller is configured to repeat processes (b) and (c) until (i) an acceptance instruction is received or (ii) another award condition is met.

16. A gaming system as claimed in claim 15, wherein at least one award condition is that a last object remains that corresponds to a last prize.

17. A gaming system as claimed in claim 15 or claim 16 wherein at least one award condition is that a

combination of objects has been selected.

18. A gaming system as claimed in any one of claims 14 to 17, wherein if another award condition has not been met when the first player accepts a displayed award, the game controller continues game play with the second player assuming the role of the first player and making object selections.

19. A gaming system as claimed in claim 18, wherein further displayed awards are specified by the game controller.

20. A gaming system as claimed in claim 18 wherein further displayed awards are specified by award instructions input by another player who assumes the role of the second player.

21. A gaming system claimed in any one of claims 14 to 20, wherein the game controller executes a base game and is configured to receive the at least one object selection subsequent to occurrence of a trigger event in the base game.

22. A game controller for a gaming system comprising a memory storing a set of objects,

the game controller configured to:

(a) receive (i) at least one object selection instruction from a first player specifying selection of an object from the set of objects, and (ii) an award instruction from a second player specifying an award to be displayed to a first player; and

(b) cause a first player display to display an award based on the received award instruction that the first player can accept or reject.

23. A game controller as claimed in claim 22, further

2011205028 27 Jul 2011

configured to:

(c) (i) if an acceptance instruction is received specifying that the first player accepts the displayed awards, grant the first player the displayed award or, (ii) if a rejection instruction is received specifying that the first player rejects the displayed award, receive at least one further object selection instruction and a further award instruction from a second player specifying an award to be displayed to a first player; and

repeat processes (a), (b) and (c) until (i) an acceptance instruction is received or (ii) another award condition is met.

24. A game controller as claimed in claim 23, wherein at least one award condition is that a last object remains that corresponds to a last prize.

25. A game controller as claimed in claim 23 or claim 24 wherein at least one award condition is that a combination of objects has been selected.

26. A game controller as claimed in any one of claims 23 to 25, wherein if another award condition has not been met when the first player accepts a displayed award, the game controller continues game play with the second player assuming the role of the first player and the game controller receiving object selections from the second player.

27. A game controller as claimed in claim 26, wherein further displayed awards are specified by the game controller.

28. A game controller as claimed in claim 18 wherein further displayed awards are specified by award instructions received from another player who assumes the

2011205028 27 Jul 2011

role of the second player.

29. A game controller claimed in any one of claims 23 to 28, wherein the game controller executes a base game and is configured to receive the at least one object selection subsequent to occurrence of a trigger event in the base game.

30. Computer program code which when executed causes a computer to implement the method of any one of claims 1 to 13.

31. A computer readable medium comprising the computer program code of claim 30.

32. A method of gaming comprising:

(i) conducting a first selection round by

(a) displaying a set of objects to a first player;

(b) receiving at least one object selection from the first player, and

(c) displaying an award to the first player that the first player can accept or reject; and

(ii) conducting at least a second selection round if the first player does not accept the displayed award, the second pick round comprising at least one further object selection being made other than by the first player.

33. A method as claimed in claim 32 the further object selection is made by a game controller.

34. A method as claimed in claim 32 wherein the further object selection is made by a second player.

35. A method as claimed in any one of claims 32 to 34 wherein subsequent to the further object selection a

further award is displayed to the second player.

36. A method as claimed in claims 33 or claim 34 comprising continuing play with at least one additional object selection made other than by the second player.

37. A method as claimed in claim 36, wherein the additional selection is made by a third player.

38. A method as claimed in claim 36, wherein the additional selection is made by the first player, and the first and second players continue to alternate selections until an award is accepted.

39. A method as claimed in any one of claims 32 to 38 comprising initially displaying a set of available prizes and making a prize unavailable in response to each object selection.

40. A game controller for a gaming system comprising:

a memory for storing a set of objects, the game controller configured to:

(i) conduct a first selection round during which the game controller is configured to:

(a) cause a first player display a set of objects to a first player;

(b) receive at least one object selection instruction from the first player specifying an object of the set of objects and make the object identified by the selection unavailable;

(c) cause the first player display to display an award to the first player that the first player can accept or reject; and

(ii) conduct at least a second selection round if the first player does not accept the displayed award during which at least one further object is selected other than by the first player.

41. A gaming system comprising:

a player interface having an instruction input mechanism;

a first player display for displaying a set of objects to a first player; and

a game controller, the game controller configured to:

(i) conduct a first selection round during which the game controller is configured to:

(a) cause a first player display to display a set of objects to a first player;

(b) receive at least one object selection instruction from the first player and make the object identified by the selection unavailable;

(c) cause the first player display to display an award to the first player that the first player can accept or reject; and

(ii) conduct at least a second round if the first player does not accept the displayed award during which at least one further object is selected other than by the first player.

42. Computer program code which when executed causes a computer to implement the method of any one of claims 32 to 39.

43. A computer readable medium comprising the computer program code of claim 42.

2011205028 27 Jul 2011

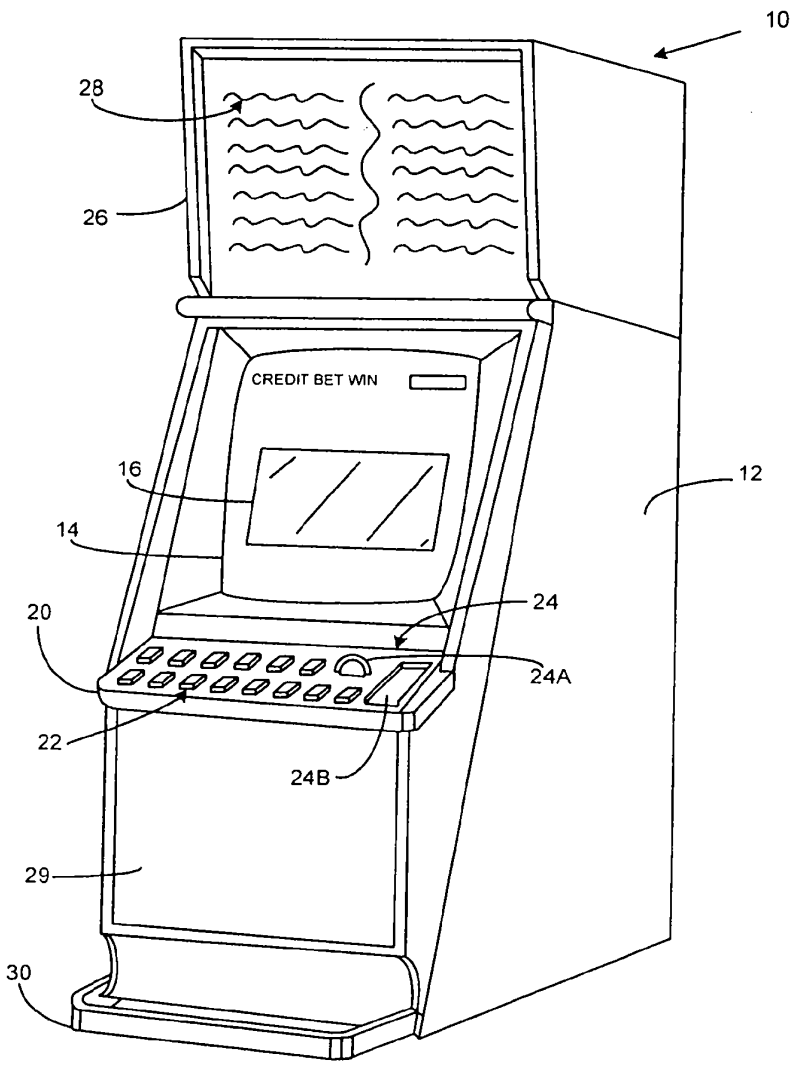

Figure 1

2011205028 27 Jul 2011

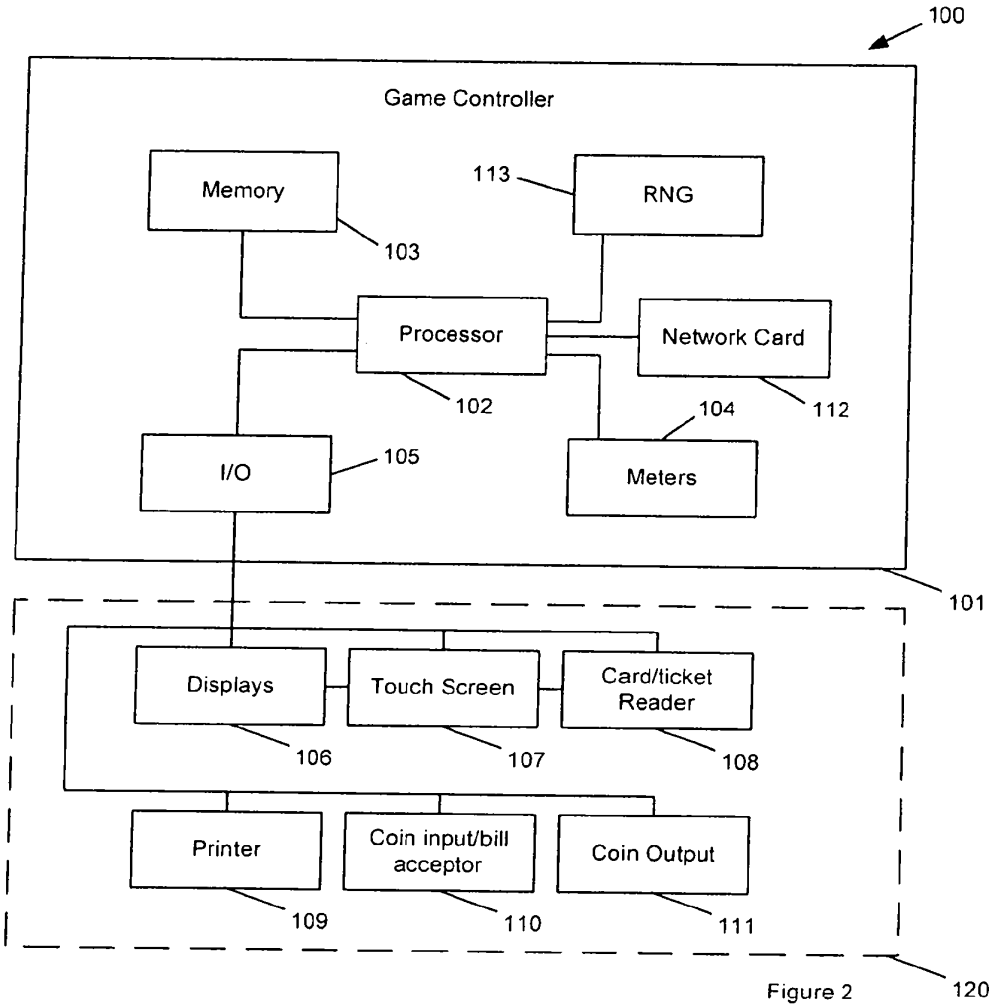

Figure 2

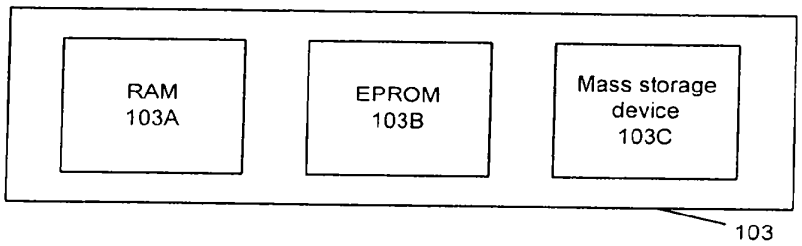

Figure 3

2011205028 27 Jul 2011

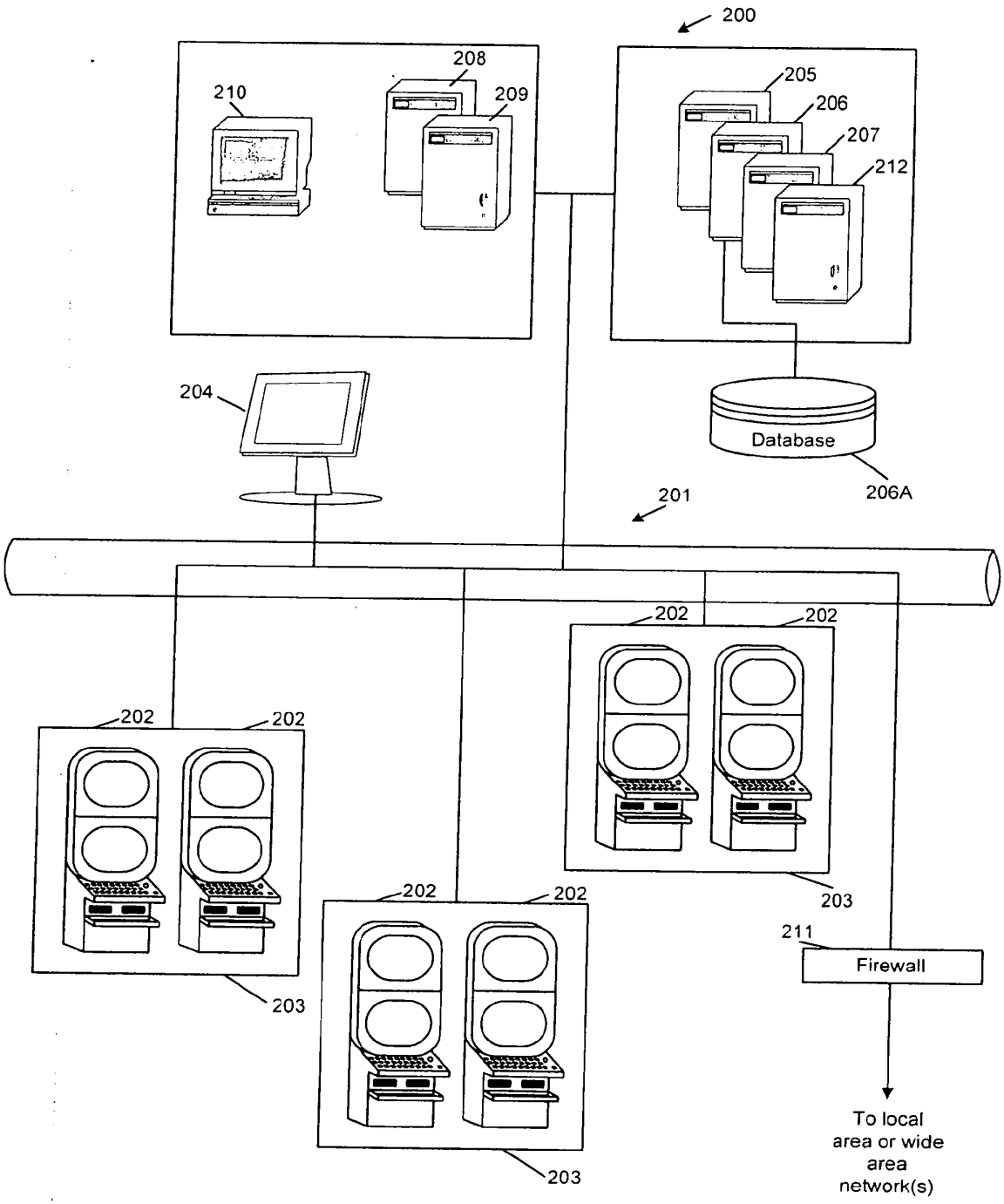

Figure 4

2011205028 27 Jul 2011

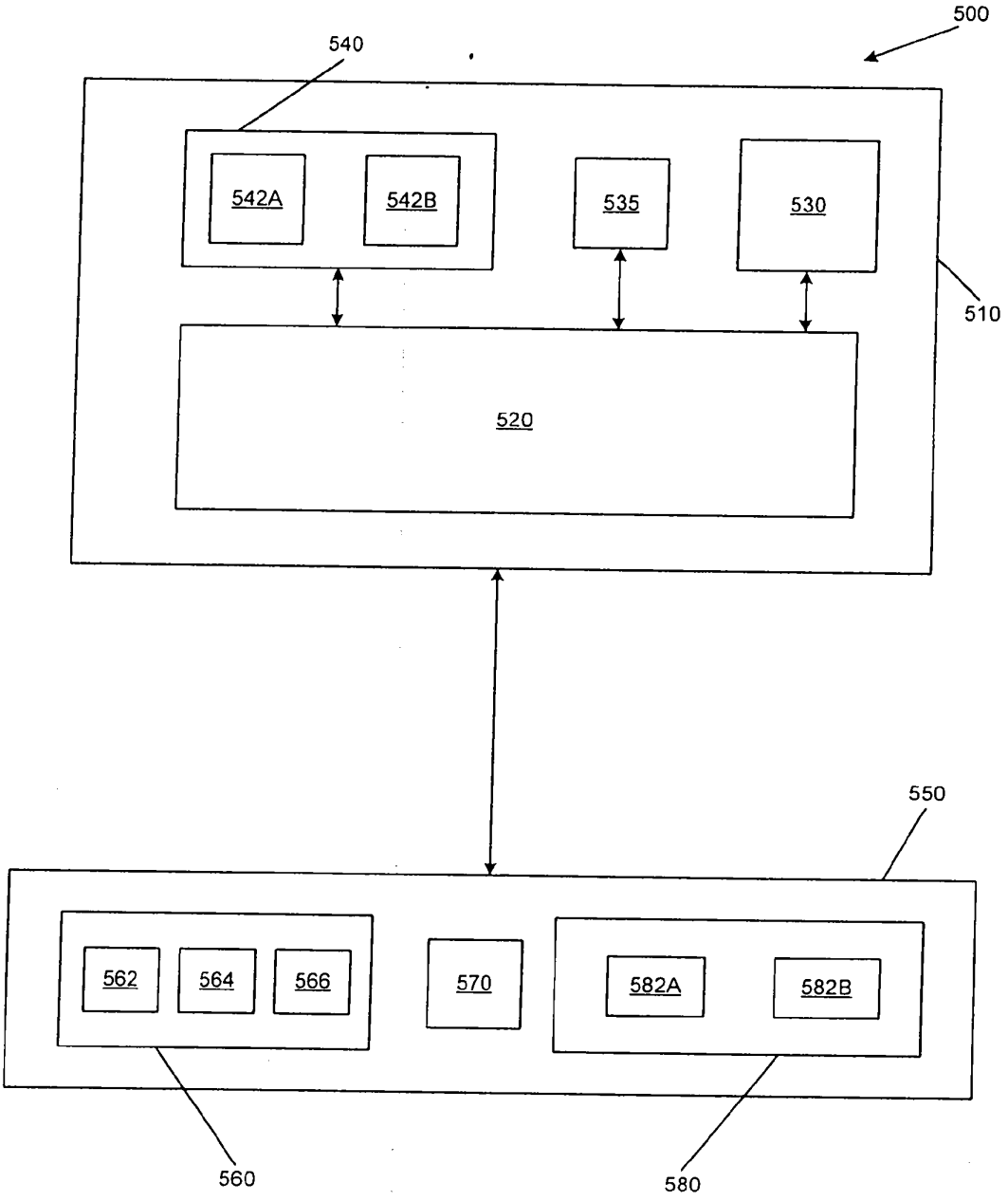

Figure 5

2011205028 27 Jul 2011

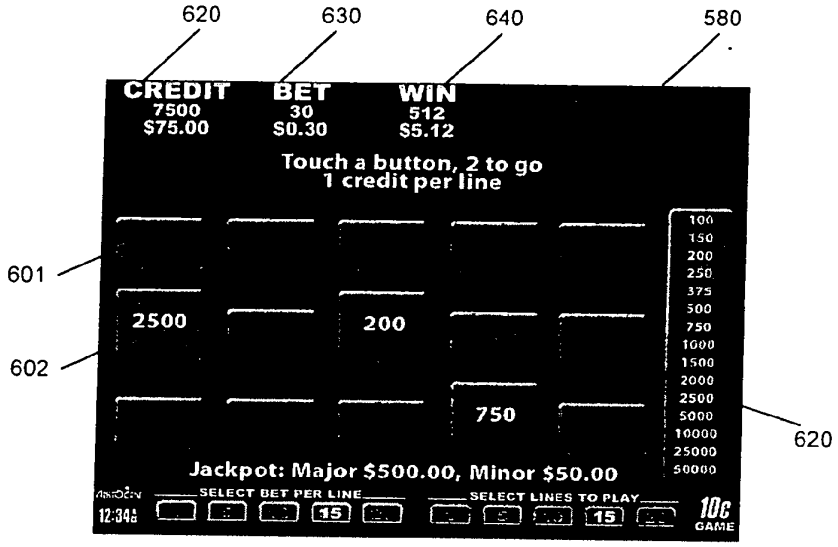

Figure 6

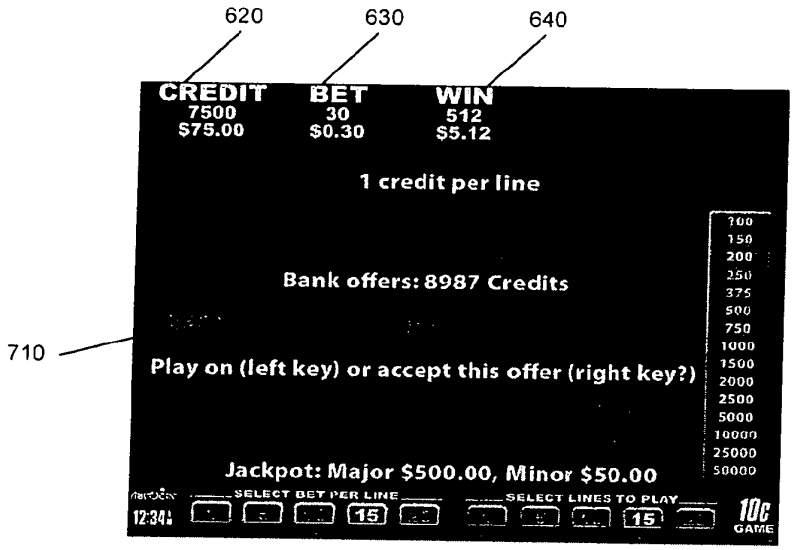

Figure 7

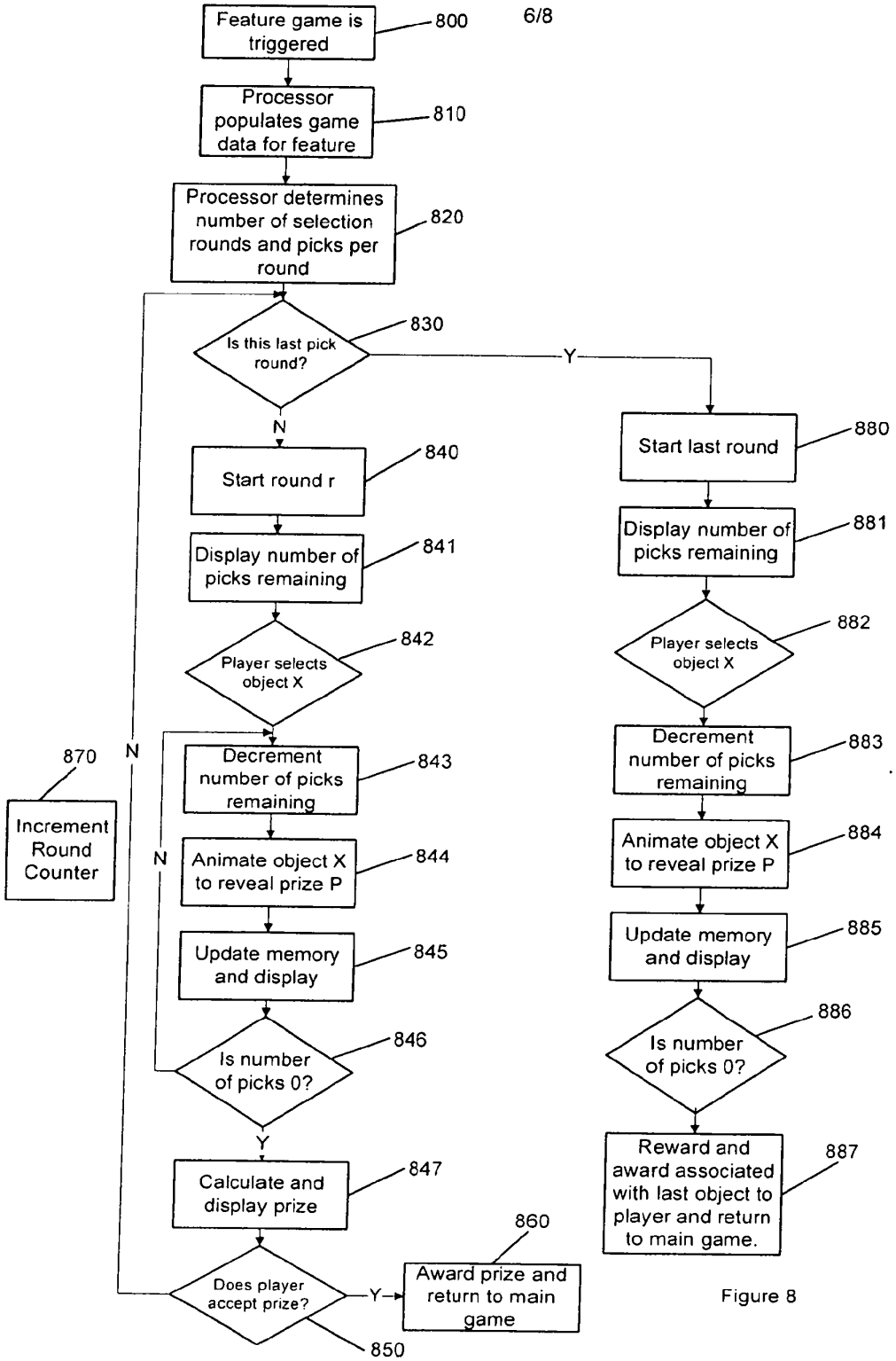
Feature game is triggered
800
Processor populates game data for feature
810
Processor determines number of selection rounds and picks per round
820
Is this last pick round?
830
Y
N
Start round r
840
Display number of picks remaining
841
Player selects object X
842
Decrement number of picks remaining
843
Animate object X to reveal prize P
844
Update memory and display
845
Is number of picks 0?
846
N
Y
Calculate and display prize
847
Does player accept prize?
850
Y
Award prize and return to main game
860
N
870
Increment Round Counter
Start last round
880
Display number of picks remaining
881
Player selects object X
882
Decrement number of picks remaining
883
Animate object X to reveal prize P
884
Update memory and display
885
Is number of picks 0?
886
Reward and award associated with last object to player and return to main game.
887

Figure 8

2011205028 27 Jul 2011

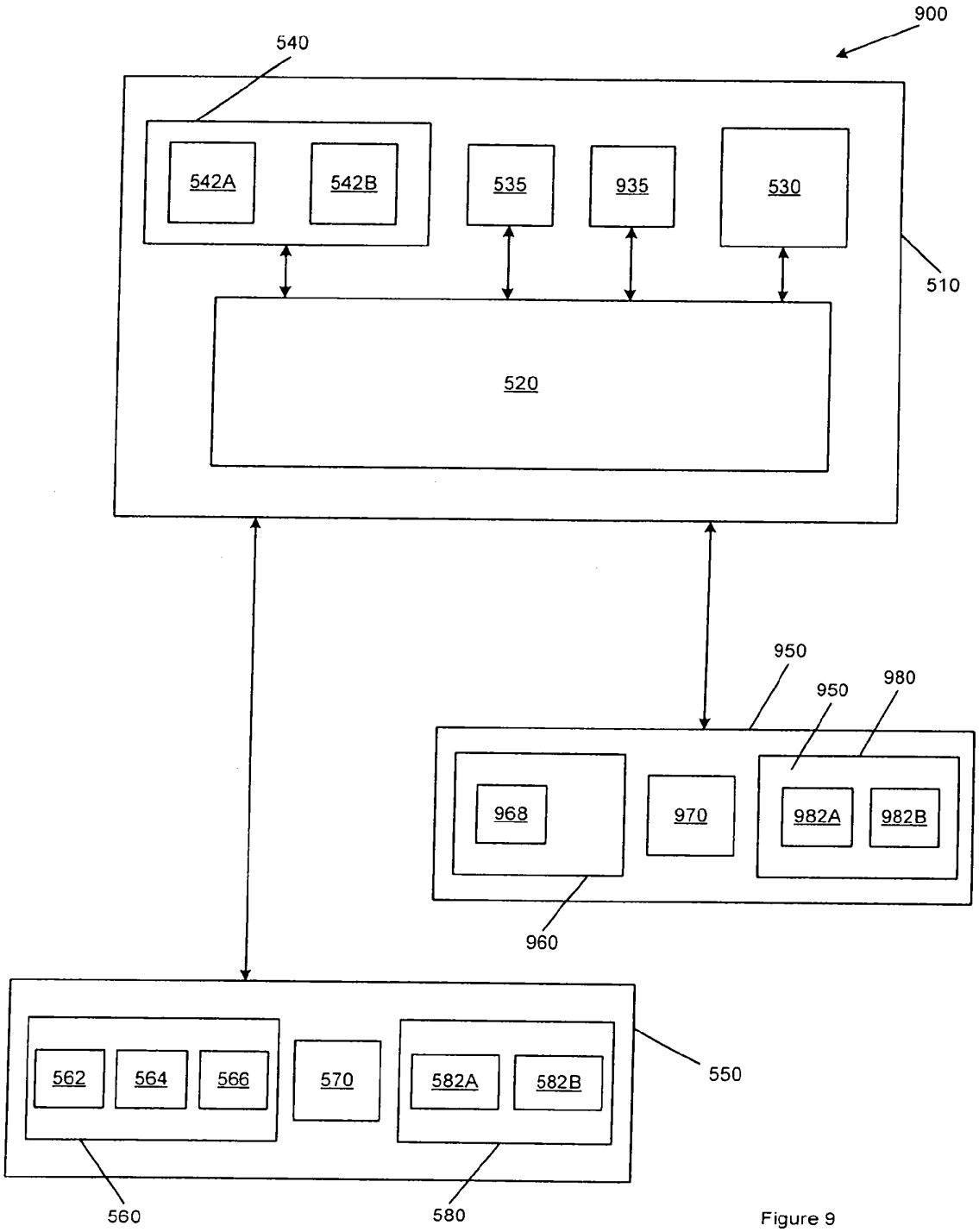

Figure 9

2011205028 27 Jul 2011

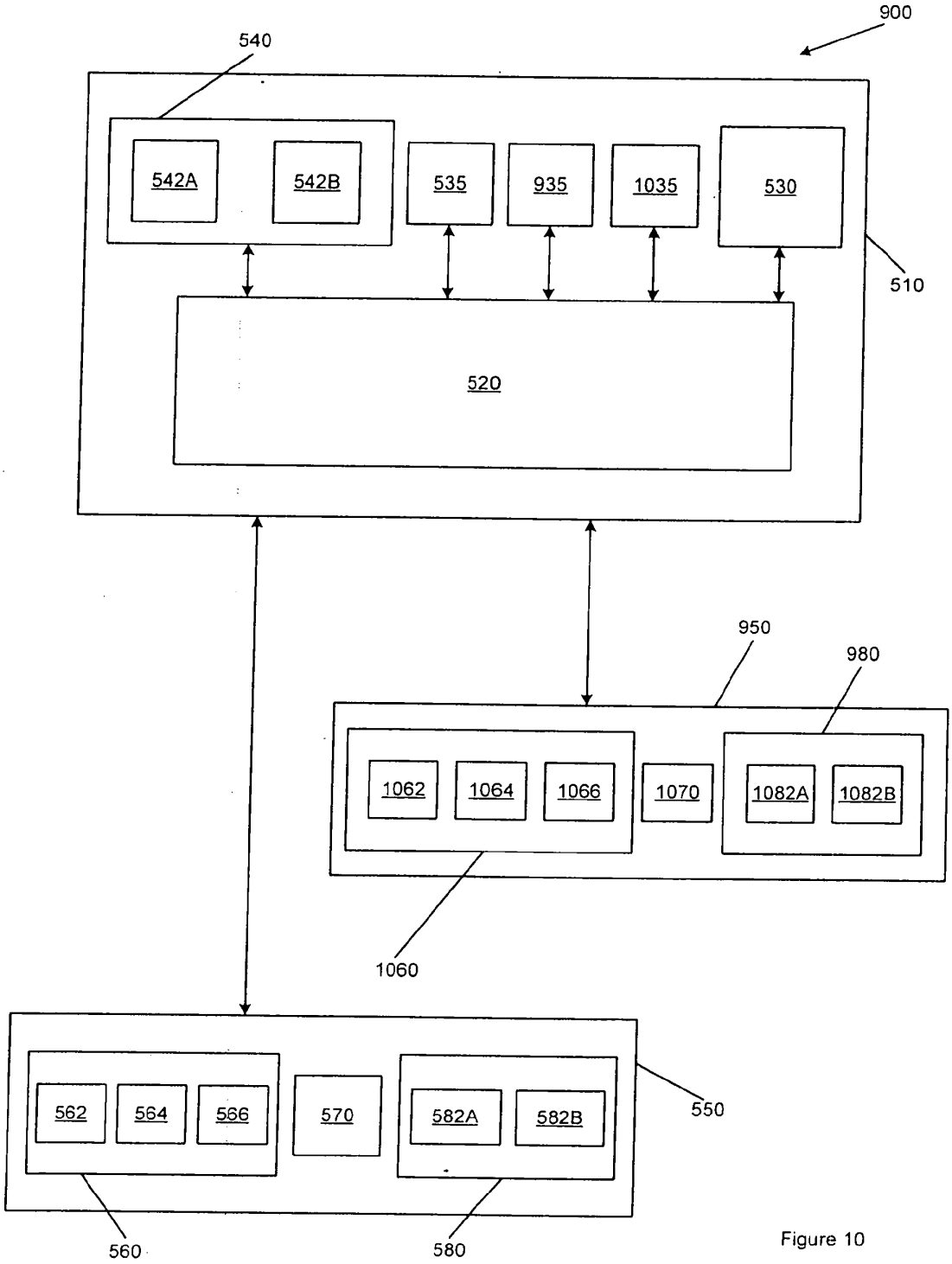

Figure 10

Electronic Acknowledgement Receipt

EFS ID:	20149785
Application Number:	14275136
International Application Number:	
Confirmation Number:	9997
Title of Invention:	WAGERING APPARATUS, METHODS AND SYSTEMS
First Named Inventor/Applicant Name:	Bernard J. Marantelli
Customer Number:	35811
Filer:	Paul A. Taufer/Nancy Nunez
Filer Authorized By:	Paul A. Taufer
Attorney Docket Number:	COB-13-1044CIP3-CON
Receipt Date:	16-SEP-2014
Filing Date:	12-MAY-2014
Time Stamp:	13:05:28
Application Type:	Utility under 35 USC 111(a)

Payment information:

Submitted with Payment	no

File Listing:

Document Number	Document Description	File Name	File Size(Bytes)/ Message Digest	Multi Part /.zip	Pages (if appl.)
1		SIDS.pdf	157342 69c10a1320e208d4b71fc962efdbc385cb949b73	yes	2

	Multipart Description/PDF files in .zip description		
	Document Description	**Start**	**End**
	Transmittal Letter	1	1
	Information Disclosure Statement (IDS) Form (SB08)	2	2

Warnings:

Information:

2	Other Reference-Patent/App/Search documents	WOISR.pdf	144797 1dacee17ccf165255f0ee78ee0751c029b6c1d4e	no	10

Warnings:

Information:

3	Foreign Reference	AU2011205028A1.pdf	1498966 a8a2dcfe0ac8ee117cd1f14bc99eebaf4543fbe8	no	45

Warnings:

Information:

Total Files Size (in bytes):	1801105

This Acknowledgement Receipt evidences receipt on the noted date by the USPTO of the indicated documents, characterized by the applicant, and including page counts, where applicable. It serves as evidence of receipt similar to a Post Card, as described in MPEP 503.

<u>New Applications Under 35 U.S.C. 111</u>
If a new application is being filed and the application includes the necessary components for a filing date (see 37 CFR 1.53(b)-(d) and MPEP 506), a Filing Receipt (37 CFR 1.54) will be issued in due course and the date shown on this Acknowledgement Receipt will establish the filing date of the application.

<u>National Stage of an International Application under 35 U.S.C. 371</u>
If a timely submission to enter the national stage of an international application is compliant with the conditions of 35 U.S.C. 371 and other applicable requirements a Form PCT/DO/EO/903 indicating acceptance of the application as a national stage submission under 35 U.S.C. 371 will be issued in addition to the Filing Receipt, in due course.

<u>New International Application Filed with the USPTO as a Receiving Office</u>
If a new international application is being filed and the international application includes the necessary components for an international filing date (see PCT Article 11 and MPEP 1810), a Notification of the International Application Number and of the International Filing Date (Form PCT/RO/105) will be issued in due course, subject to prescriptions concerning national security, and the date shown on this Acknowledgement Receipt will establish the international filing date of the application.

IN THE UNITED STATES PATENT AND TRADEMARK OFFICE

Art Unit	:	**Customer No. 035811**
Examiner	:	
Serial No.	: 14/275,136	Docket No.: COB-13-1044CIP3-CON
Filed	: May 12, 2014	
Inventor(s)	: Bernard J. Marantelli	Confirmation No.: 9997
Title	: WAGERING APPARATUS,	
	: METHODS AND SYSTEMS	Dated: September 16, 2014

SUPPLEMENTAL INFORMATION DISCLOSURE STATEMENT

Commissioner for Patents
P.O. Box 1450
Alexandria, VA 22313-1450

Sir:

The Applicant encloses Form PTO-1449 together with a copy of a listed non-US publication and the Written Opinion and International Search Report issued September 4, 2014. The publications are submitted under 37 CFR §1.56 and are believed related to this application for the reasons stated.

Applicant certifies that the items of information contained in the Supplemental Information Disclosure Statement was first cited in any communication from any foreign patent office in a counterpart foreign application not more than three months ago.

The Applicant respectfully requests that this Supplemental Information Disclosure Statement be officially entered into the file and that appropriate notification be made that it was considered by the Examiner.

Respectfully submitted,

Paul A. Tanfer
Reg. No. 35,703

PAT/nn
(215) 656-3385

EAST\82767192.1

UNITED STATES PATENT AND TRADEMARK OFFICE

UNITED STATES DEPARTMENT OF COMMERCE
United States Patent and Trademark Office
Address: COMMISSIONER FOR PATENTS
P.O. Box 1450
Alexandria, Virginia 22313-1450
www.uspto.gov

APPLICATION NUMBER	FILING OR 371(C) DATE	FIRST NAMED APPLICANT	ATTY. DOCKET NO./TITLE
14/275,136	05/12/2014	Bernard J. Marantelli	COB-13-1044CIP3-CON

CONFIRMATION NO. 9997

35811
IP GROUP OF DLA PIPER LLP (US)
ONE LIBERTY PLACE
1650 MARKET ST, SUITE 4900
PHILADELPHIA, PA 19103

PUBLICATION NOTICE

OC000000070692561

Title:WAGERING APPARATUS, METHODS AND SYSTEMS

Publication No.US-2014-0256414-A1
Publication Date:09/11/2014

NOTICE OF PUBLICATION OF APPLICATION

The above-identified application will be electronically published as a patent application publication pursuant to 37 CFR 1.211, et seq. The patent application publication number and publication date are set forth above.

The publication may be accessed through the USPTO's publically available Searchable Databases via the Internet at www.uspto.gov. The direct link to access the publication is currently http://www.uspto.gov/patft/.

The publication process established by the Office does not provide for mailing a copy of the publication to applicant. A copy of the publication may be obtained from the Office upon payment of the appropriate fee set forth in 37 CFR 1.19(a)(1). Orders for copies of patent application publications are handled by the USPTO's Office of Public Records. The Office of Public Records can be reached by telephone at (703) 308-9726 or (800) 972-6382, by facsimile at (703) 305-8759, by mail addressed to the United States Patent and Trademark Office, Office of Public Records, Alexandria, VA 22313-1450 or via the Internet.

In addition, information on the status of the application, including the mailing date of Office actions and the dates of receipt of correspondence filed in the Office, may also be accessed via the Internet through the Patent Electronic Business Center at www.uspto.gov using the public side of the Patent Application Information and Retrieval (PAIR) system. The direct link to access this status information is currently http://pair.uspto.gov/. Prior to publication, such status information is confidential and may only be obtained by applicant using the private side of PAIR.

Further assistance in electronically accessing the publication, or about PAIR, is available by calling the Patent Electronic Business Center at 1-866-217-9197.

Office of Data Managment, Application Assistance Unit (571) 272-4000, or (571) 272-4200, or 1-888-786-0101

PATENT APPLICATION FEE DETERMINATION RECORD Substitute for Form PTO-875	Application or Docket Number 14/275,136

APPLICATION AS FILED - PART I

FOR	(Column 1) NUMBER FILED	(Column 2) NUMBER EXTRA	SMALL ENTITY RATE($)	SMALL ENTITY FEE($)	OR	OTHER THAN SMALL ENTITY RATE($)	OTHER THAN SMALL ENTITY FEE($)
BASIC FEE (37 CFR 1.16(a), (b), or (c))	N/A	N/A	N/A	70		N/A	
SEARCH FEE (37 CFR 1.16(k), (i), or (m))	N/A	N/A	N/A	300		N/A	
EXAMINATION FEE (37 CFR 1.16(o), (p), or (q))	N/A	N/A	N/A	360		N/A	
TOTAL CLAIMS (37 CFR 1.16(i))	40 minus 20 =	* 20	x 40 =	800	OR		
INDEPENDENT CLAIMS (37 CFR 1.16(h))	4 minus 3 =	* 1	x 210 =	210			
APPLICATION SIZE FEE (37 CFR 1.16(s))	If the specification and drawings exceed 100 sheets of paper, the application size fee due is $310 ($155 for small entity) for each additional 50 sheets or fraction thereof. See 35 U.S.C. 41(a)(1)(G) and 37 CFR 1.16(s).			0.00			
MULTIPLE DEPENDENT CLAIM PRESENT (37 CFR 1.16(j))				0.00			
* If the difference in column 1 is less than zero, enter "0" in column 2.			TOTAL	1740		TOTAL	

APPLICATION AS AMENDED - PART II

		(Column 1) CLAIMS REMAINING AFTER AMENDMENT		(Column 2) HIGHEST NUMBER PREVIOUSLY PAID FOR	(Column 3) PRESENT EXTRA	SMALL ENTITY RATE($)	SMALL ENTITY ADDITIONAL FEE($)	OR	OTHER THAN SMALL ENTITY RATE($)	OTHER THAN SMALL ENTITY ADDITIONAL FEE($)
AMENDMENT A	Total (37 CFR 1.16(i))	*	Minus	**	=	x =		OR	x =	
AMENDMENT A	Independent (37 CFR 1.16(h))	*	Minus	***	=	x =		OR	x =	
AMENDMENT A	Application Size Fee (37 CFR 1.16(s))									
AMENDMENT A	FIRST PRESENTATION OF MULTIPLE DEPENDENT CLAIM (37 CFR 1.16(j))							OR		
						TOTAL ADD'L FEE		OR	TOTAL ADD'L FEE	

		(Column 1) CLAIMS REMAINING AFTER AMENDMENT		(Column 2) HIGHEST NUMBER PREVIOUSLY PAID FOR	(Column 3) PRESENT EXTRA	RATE($)	ADDITIONAL FEE($)		RATE($)	ADDITIONAL FEE($)
AMENDMENT B	Total (37 CFR 1.16(i))	*	Minus	**	=	x =		OR	x =	
AMENDMENT B	Independent (37 CFR 1.16(h))	*	Minus	***	=	x =		OR	x =	
AMENDMENT B	Application Size Fee (37 CFR 1.16(s))									
AMENDMENT B	FIRST PRESENTATION OF MULTIPLE DEPENDENT CLAIM (37 CFR 1.16(j))							OR		
						TOTAL ADD'L FEE		OR	TOTAL ADD'L FEE	

* If the entry in column 1 is less than the entry in column 2, write "0" in column 3.
** If the "Highest Number Previously Paid For" IN THIS SPACE is less than 20, enter "20".
*** If the "Highest Number Previously Paid For" IN THIS SPACE is less than 3, enter "3".
The "Highest Number Previously Paid For" (Total or Independent) is the highest found in the appropriate box in column 1.

UNITED STATES PATENT AND TRADEMARK OFFICE

UNITED STATES DEPARTMENT OF COMMERCE
United States Patent and Trademark Office
Address: COMMISSIONER FOR PATENTS
P.O. Box 1450
Alexandria, Virginia 22313-1450
www.uspto.gov

APPLICATION NUMBER	FILING or 371(c) DATE	GRP ART UNIT	FIL FEE REC'D	ATTY.DOCKET.NO	TOT CLAIMS	IND CLAIMS
14/275,136	05/12/2014	3711	1740	COB-13-1044CIP3-CON	40	4

CONFIRMATION NO. 9997

UPDATED FILING RECEIPT

35811
IP GROUP OF DLA PIPER LLP (US)
ONE LIBERTY PLACE
1650 MARKET ST, SUITE 4900
PHILADELPHIA, PA 19103

OC000000068813599

Date Mailed: 06/06/2014

Receipt is acknowledged of this non-provisional patent application. The application will be taken up for examination in due course. Applicant will be notified as to the results of the examination. Any correspondence concerning the application must include the following identification information: the U.S. APPLICATION NUMBER, FILING DATE, NAME OF APPLICANT, and TITLE OF INVENTION. Fees transmitted by check or draft are subject to collection. Please verify the accuracy of the data presented on this receipt. **If an error is noted on this Filing Receipt, please submit a written request for a Filing Receipt Correction. Please provide a copy of this Filing Receipt with the changes noted thereon. If you received a "Notice to File Missing Parts" for this application, please submit any corrections to this Filing Receipt with your reply to the Notice. When the USPTO processes the reply to the Notice, the USPTO will generate another Filing Receipt incorporating the requested corrections**

Inventor(s)

Bernard J. Marantelli, London, UNITED KINGDOM;

Applicant(s)

Diogenes Limited, Douglas, ISLE OF MAN

Assignment For Published Patent Application

Diogenes Limited, Douglas, ISLE OF MAN

Power of Attorney:

Thomas Christenbury--31750
Paul Taufer--35703
Darius Gambino--41472
Richard Cruz--52783
William Bartow--54981
Michael Burns--57593
Lisa Lint--60856
Maxim Rapoport--67675

Domestic Priority data as claimed by applicant

This application is a CON of 13/958,028 08/02/2013 PAT 8721439
which is a CIP of 13/605,813 09/06/2012 PAT 8602884

Foreign Applications for which priority is claimed (You may be eligible to benefit from the **Patent Prosecution Highway** program at the USPTO. Please see http://www.uspto.gov for more information.) - None.
Foreign application information must be provided in an Application Data Sheet in order to constitute a claim to foreign priority. See 37 CFR 1.55 and 1.76.

Permission to Access - A proper **Authorization to Permit Access to Application by Participating Offices** (PTO/SB/39 or its equivalent) has been received by the USPTO.

If Required, Foreign Filing License Granted: 05/23/2014

The country code and number of your priority application, to be used for filing abroad under the Paris Convention, is **US 14/275,136**

Projected Publication Date: 09/11/2014

Non-Publication Request: No

Early Publication Request: No
**** SMALL ENTITY ****
Title

WAGERING APPARATUS, METHODS AND SYSTEMS

Preliminary Class

273

Statement under 37 CFR 1.55 or 1.78 for AIA (First Inventor to File) Transition Applications: No

PROTECTING YOUR INVENTION OUTSIDE THE UNITED STATES

Since the rights granted by a U.S. patent extend only throughout the territory of the United States and have no effect in a foreign country, an inventor who wishes patent protection in another country must apply for a patent in a specific country or in regional patent offices. Applicants may wish to consider the filing of an international application under the Patent Cooperation Treaty (PCT). An international (PCT) application generally has the same effect as a regular national patent application in each PCT-member country. The PCT process **simplifies** the filing of patent applications on the same invention in member countries, but **does not result** in a grant of "an international patent" and does not eliminate the need of applicants to file additional documents and fees in countries where patent protection is desired.

Almost every country has its own patent law, and a person desiring a patent in a particular country must make an application for patent in that country in accordance with its particular laws. Since the laws of many countries differ in various respects from the patent law of the United States, applicants are advised to seek guidance from specific foreign countries to ensure that patent rights are not lost prematurely.

Applicants also are advised that in the case of inventions made in the United States, the Director of the USPTO must issue a license before applicants can apply for a patent in a foreign country. The filing of a U.S. patent application serves as a request for a foreign filing license. The application's filing receipt contains further information and guidance as to the status of applicant's license for foreign filing.

Applicants may wish to consult the USPTO booklet, "General Information Concerning Patents" (specifically, the section entitled "Treaties and Foreign Patents") for more information on timeframes and deadlines for filing foreign patent applications. The guide is available either by contacting the USPTO Contact Center at 800-786-9199, or it can be viewed on the USPTO website at http://www.uspto.gov/web/offices/pac/doc/general/index.html.

For information on preventing theft of your intellectual property (patents, trademarks and copyrights), you may wish to consult the U.S. Government website, http://www.stopfakes.gov. Part of a Department of Commerce initiative, this website includes self-help "toolkits" giving innovators guidance on how to protect intellectual property in specific countries such as China, Korea and Mexico. For questions regarding patent enforcement issues, applicants may call the U.S. Government hotline at 1-866-999-HALT (1-866-999-4258).

LICENSE FOR FOREIGN FILING UNDER

Title 35, United States Code, Section 184

Title 37, Code of Federal Regulations, 5.11 & 5.15

GRANTED

The applicant has been granted a license under 35 U.S.C. 184, if the phrase "IF REQUIRED, FOREIGN FILING LICENSE GRANTED" followed by a date appears on this form. Such licenses are issued in all applications where the conditions for issuance of a license have been met, regardless of whether or not a license may be required as set forth in 37 CFR 5.15. The scope and limitations of this license are set forth in 37 CFR 5.15(a) unless an earlier license has been issued under 37 CFR 5.15(b). The license is subject to revocation upon written notification. The date indicated is the effective date of the license, unless an earlier license of similar scope has been granted under 37 CFR 5.13 or 5.14.

This license is to be retained by the licensee and may be used at any time on or after the effective date thereof unless it is revoked. This license is automatically transferred to any related applications(s) filed under 37 CFR 1.53(d). This license is not retroactive.

The grant of a license does not in any way lessen the responsibility of a licensee for the security of the subject matter as imposed by any Government contract or the provisions of existing laws relating to espionage and the national security or the export of technical data. Licensees should apprise themselves of current regulations especially with respect to certain countries, of other agencies, particularly the Office of Defense Trade Controls, Department of State (with respect to Arms, Munitions and Implements of War (22 CFR 121-128)); the Bureau of Industry and Security, Department of Commerce (15 CFR parts 730-774); the Office of Foreign AssetsControl, Department of Treasury (31 CFR Parts 500+) and the Department of Energy.

NOT GRANTED

No license under 35 U.S.C. 184 has been granted at this time, if the phrase "IF REQUIRED, FOREIGN FILING LICENSE GRANTED" DOES NOT appear on this form. Applicant may still petition for a license under 37 CFR 5.12, if a license is desired before the expiration of 6 months from the filing date of the application. If 6 months has lapsed from the filing date of this application and the licensee has not received any indication of a secrecy order under 35 U.S.C. 181, the licensee may foreign file the application pursuant to 37 CFR 5.15(b).

SelectUSA

The United States represents the largest, most dynamic marketplace in the world and is an unparalleled location for business investment, innovation, and commercialization of new technologies. The U.S. offers tremendous resources and advantages for those who invest and manufacture goods here. Through SelectUSA, our nation works to promote and facilitate business investment. SelectUSA provides information assistance to the international investor community; serves as an ombudsman for existing and potential investors; advocates on behalf of U.S. cities, states, and regions competing for global investment; and counsels U.S. economic development organizations on investment attraction best practices. To learn more about why the United States is the best country in the world to develop technology, manufacture products, deliver services, and grow your business, visit http://www.SelectUSA.gov or call +1-202-482-6800.

IN THE UNITED STATES PATENT AND TRADEMARK OFFICE

Art Unit	:	**Customer No. 035811**
Examiner	:	
Serial No.	: 14/275,136	Docket No.: COB-13-1044CIP3-CON
Filed	: May 12, 2014	
Inventor(s)	: Bernard J. Marantelli	Confirmation No.: 9997
Title	: WAGERING APPARATUS,	
	: METHODS AND SYSTEMS	Dated: May 29, 2014

TRANSMITTAL LETTER

Mail Stop Missing Parts
Commissioner for Patents
P.O. Box 1450
Alexandria, VA 22313-1450

Sir:

In response to the Notice to File Corrected Application Papers dated May 28, 2014, Applicant submits herewith two (2) sheets of replacement drawings comprising Figs. 1 – 2. Entry into the Official File is respectfully requested.

No fee is required in connection with the filing of the drawings. However, the Commissioner is authorized to charge any fees which may be required in connection with submission of the drawings to Deposit Account No. 50-2719.

Respectfully submitted,

Paul A. Taufer
Reg. No. 35,703

PAT/nn
(215) 656-3385

EAST\76852794.1

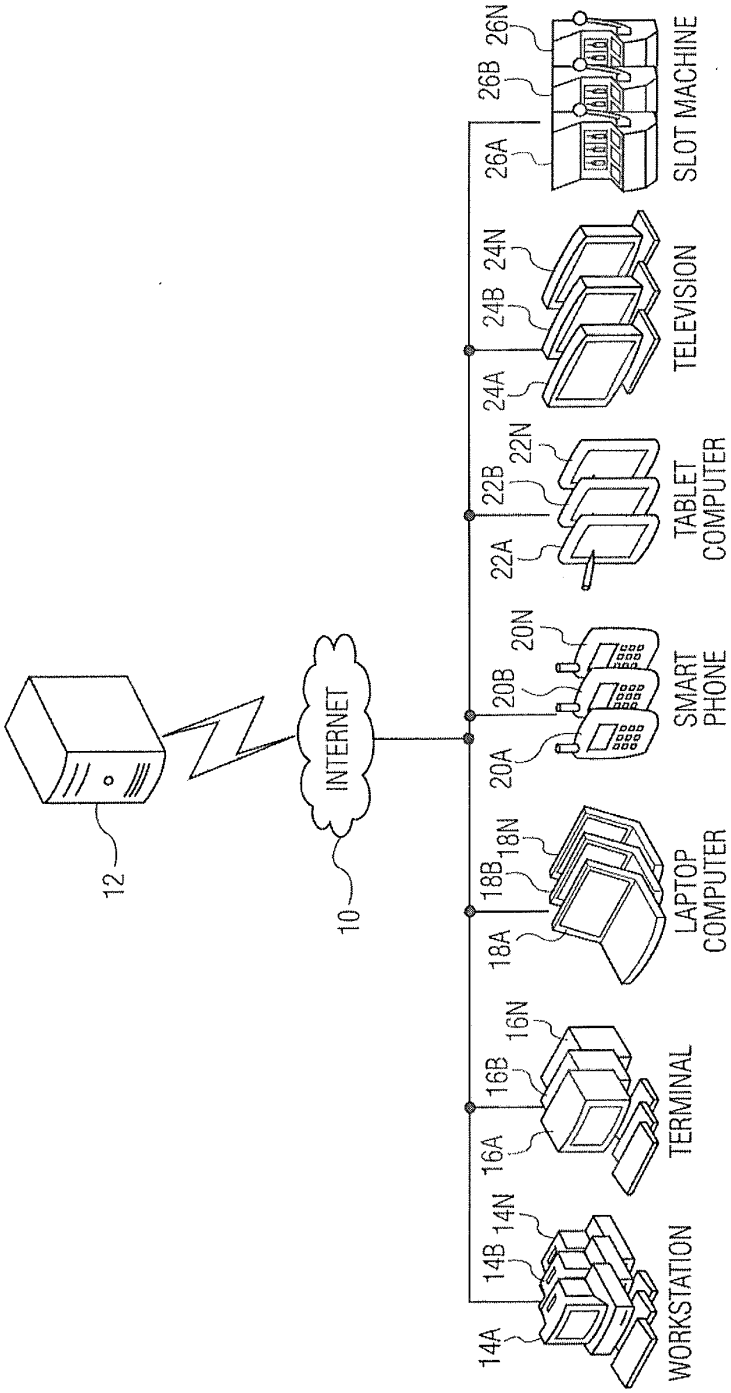
12
10
INTERNET
14A
14B
14N
WORKSTATION
16A
16B
16N
TERMINAL
18A
18B
18N
LAPTOP COMPUTER
20A
20B
20N
SMART PHONE
22A
22B
22N
TABLET COMPUTER
24A
24B
24N
TELEVISION
26A
26B
26N
SLOT MACHINE

FIG. 1

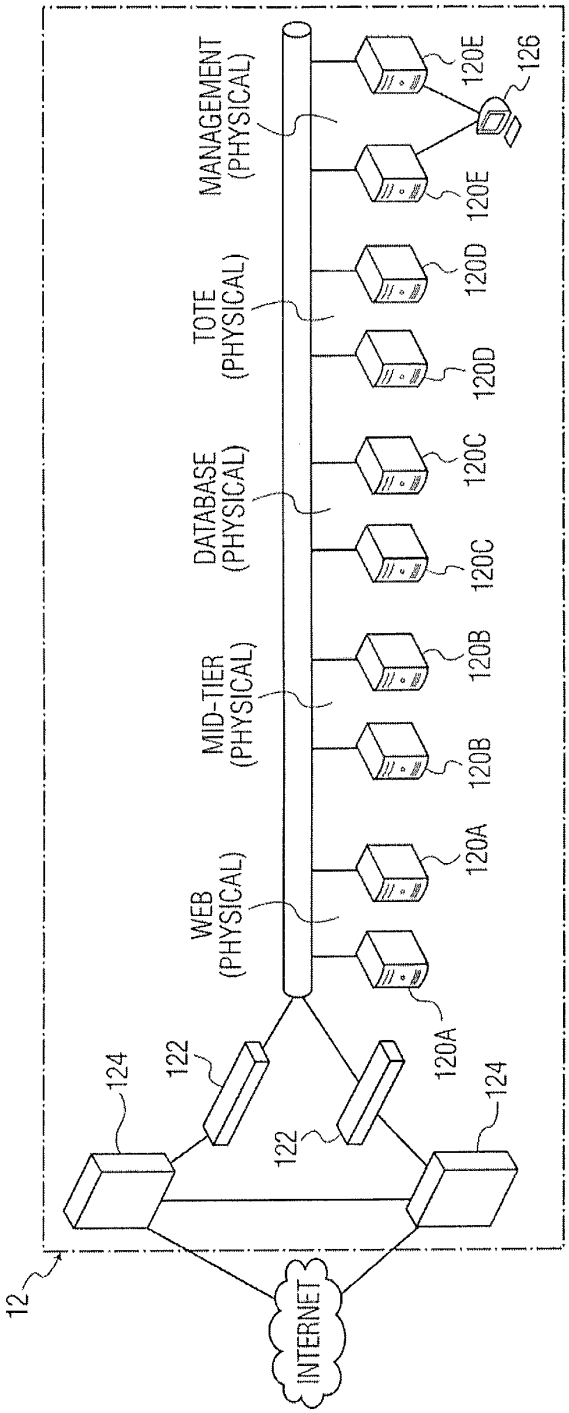
12
INTERNET
124
122
122
124
WEB (PHYSICAL)
MID-TIER (PHYSICAL)
DATABASE (PHYSICAL)
TOTE (PHYSICAL)
MANAGEMENT (PHYSICAL)
120A
120A
120B
120B
120C
120C
120D
120D
120E
120E
126

FIG. 2

Electronic Acknowledgement Receipt

EFS ID:	19160531
Application Number:	14275136
International Application Number:	
Confirmation Number:	9997
Title of Invention:	WAGERING APPARATUS, METHODS AND SYSTEMS
First Named Inventor/Applicant Name:	Bernard J. Marantelli
Customer Number:	35811
Filer:	Paul A. Taufer/Nancy Nunez
Filer Authorized By:	Paul A. Taufer
Attorney Docket Number:	COB-13-1044CIP3-CON
Receipt Date:	29-MAY-2014
Filing Date:	12-MAY-2014
Time Stamp:	15:43:10
Application Type:	Utility under 35 USC 111(a)

Payment information:

Submitted with Payment	no

File Listing:

Document Number	Document Description	File Name	File Size(Bytes)/ Message Digest	Multi Part /.zip	Pages (if appl.)
1		TLwithReplaceFigs.pdf	166437 1a8ba71adca8f2fe327ccb8ed1285187af0c48d0	yes	3

	Multipart Description/PDF files in .zip description		
	Document Description	**Start**	**End**
	Applicant Response to Pre-Exam Formalities Notice	1	1
	Drawings-only black and white line drawings	2	3
Warnings:			
Information:			
	Total Files Size (in bytes):	166437	

This Acknowledgement Receipt evidences receipt on the noted date by the USPTO of the indicated documents, characterized by the applicant, and including page counts, where applicable. It serves as evidence of receipt similar to a Post Card, as described in MPEP 503.

New Applications Under 35 U.S.C. 111
If a new application is being filed and the application includes the necessary components for a filing date (see 37 CFR 1.53(b)-(d) and MPEP 506), a Filing Receipt (37 CFR 1.54) will be issued in due course and the date shown on this Acknowledgement Receipt will establish the filing date of the application.

National Stage of an International Application under 35 U.S.C. 371
If a timely submission to enter the national stage of an international application is compliant with the conditions of 35 U.S.C. 371 and other applicable requirements a Form PCT/DO/EO/903 indicating acceptance of the application as a national stage submission under 35 U.S.C. 371 will be issued in addition to the Filing Receipt, in due course.

New International Application Filed with the USPTO as a Receiving Office
If a new international application is being filed and the international application includes the necessary components for an international filing date (see PCT Article 11 and MPEP 1810), a Notification of the International Application Number and of the International Filing Date (Form PCT/RO/105) will be issued in due course, subject to prescriptions concerning national security, and the date shown on this Acknowledgement Receipt will establish the international filing date of the application.

PATENT APPLICATION FEE DETERMINATION RECORD Substitute for Form PTO-875	Application or Docket Number 14/275,136

APPLICATION AS FILED - PART I

FOR	(Column 1) NUMBER FILED	(Column 2) NUMBER EXTRA	SMALL ENTITY RATE($)	SMALL ENTITY FEE($)	OR	OTHER THAN SMALL ENTITY RATE($)	OTHER THAN SMALL ENTITY FEE($)
BASIC FEE (37 CFR 1.16(a), (b), or (c))	N/A	N/A	N/A	70		N/A	
SEARCH FEE (37 CFR 1.16(k), (i), or (m))	N/A	N/A	N/A	300		N/A	
EXAMINATION FEE (37 CFR 1.16(o), (p), or (q))	N/A	N/A	N/A	360		N/A	
TOTAL CLAIMS (37 CFR 1.16(i))	40 minus 20 =	* 20	x 40 =	800	OR		
INDEPENDENT CLAIMS (37 CFR 1.16(h))	4 minus 3 =	* 1	x 210 =	210			
APPLICATION SIZE FEE (37 CFR 1.16(s))	If the specification and drawings exceed 100 sheets of paper, the application size fee due is $310 ($155 for small entity) for each additional 50 sheets or fraction thereof. See 35 U.S.C. 41(a)(1)(G) and 37 CFR 1.16(s).			0.00			
MULTIPLE DEPENDENT CLAIM PRESENT (37 CFR 1.16(j))				0.00			
* If the difference in column 1 is less than zero, enter "0" in column 2.			TOTAL	1740		TOTAL	

APPLICATION AS AMENDED - PART II

		(Column 1) CLAIMS REMAINING AFTER AMENDMENT		(Column 2) HIGHEST NUMBER PREVIOUSLY PAID FOR	(Column 3) PRESENT EXTRA	SMALL ENTITY RATE($)	SMALL ENTITY ADDITIONAL FEE($)	OR	OTHER THAN SMALL ENTITY RATE($)	OTHER THAN SMALL ENTITY ADDITIONAL FEE($)
AMENDMENT A	Total (37 CFR 1.16(i))	*	Minus	**	=	x =		OR	x =	
AMENDMENT A	Independent (37 CFR 1.16(h))	*	Minus	***	=	x =		OR	x =	
AMENDMENT A	Application Size Fee (37 CFR 1.16(s))									
AMENDMENT A	FIRST PRESENTATION OF MULTIPLE DEPENDENT CLAIM (37 CFR 1.16(j))							OR		
						TOTAL ADD'L FEE		OR	TOTAL ADD'L FEE	

		(Column 1) CLAIMS REMAINING AFTER AMENDMENT		(Column 2) HIGHEST NUMBER PREVIOUSLY PAID FOR	(Column 3) PRESENT EXTRA	RATE($)	ADDITIONAL FEE($)	OR	RATE($)	ADDITIONAL FEE($)
AMENDMENT B	Total (37 CFR 1.16(i))	*	Minus	**	=	x =		OR	x =	
AMENDMENT B	Independent (37 CFR 1.16(h))	*	Minus	***	=	x =		OR	x =	
AMENDMENT B	Application Size Fee (37 CFR 1.16(s))									
AMENDMENT B	FIRST PRESENTATION OF MULTIPLE DEPENDENT CLAIM (37 CFR 1.16(j))							OR		
						TOTAL ADD'L FEE		OR	TOTAL ADD'L FEE	

* If the entry in column 1 is less than the entry in column 2, write "0" in column 3.
** If the "Highest Number Previously Paid For" IN THIS SPACE is less than 20, enter "20".
*** If the "Highest Number Previously Paid For" IN THIS SPACE is less than 3, enter "3".
The "Highest Number Previously Paid For" (Total or Independent) is the highest found in the appropriate box in column 1.

UNITED STATES PATENT AND TRADEMARK OFFICE

UNITED STATES DEPARTMENT OF COMMERCE
United States Patent and Trademark Office
Address: COMMISSIONER FOR PATENTS
P.O. Box 1450
Alexandria, Virginia 22313-1450
www.uspto.gov

APPLICATION NUMBER	FILING OR 371(C) DATE	FIRST NAMED APPLICANT	ATTY. DOCKET NO./TITLE
14/275,136	05/12/2014	Bernard J. Marantelli	COB-13-1044CIP3-CON

CONFIRMATION NO. 9997

FORMALITIES LETTER

35811
IP GROUP OF DLA PIPER LLP (US)
ONE LIBERTY PLACE
1650 MARKET ST, SUITE 4900
PHILADELPHIA, PA 19103

OC000000068648020

Date Mailed: 05/28/2014

NOTICE TO FILE CORRECTED APPLICATION PAPERS

Filing Date Granted

An application number and filing date have been accorded to this application. The application is informal since it does not comply with the regulations for the reason(s) indicated below. Applicant is given TWO MONTHS from the date of this Notice within which to correct the informalities indicated below. Extensions of time may be obtained by filing a petition accompanied by the extension fee under the provisions of 37 CFR 1.136(a).

The required item(s) identified below must be timely submitted to avoid abandonment:

- Replacement drawings in compliance with 37 CFR 1.84 and 37 CFR 1.121(d) are required. The drawings submitted are not acceptable because:
  - The drawings submitted to the Office are not electronically reproducible because portions of figures 1, 2 are missing and/or blurry.

Applicant is cautioned that correction of the above items may cause the specification and drawings page count to exceed 100 pages. If the specification and drawings exceed 100 pages, applicant will need to submit the required application size fee.

Replies must be received in the USPTO within the set time period or must include a proper Certificate of Mailing or Transmission under 37 CFR 1.8 with a mailing or transmission date within the set time period. For more information and a suggested format, see Form PTO/SB/92 and MPEP 512.

Replies should be mailed to:

Mail Stop Missing Parts
Commissioner for Patents
P.O. Box 1450
Alexandria VA 22313-1450

Registered users of EFS-Web may alternatively submit their reply to this notice via EFS-Web, including a copy of this Notice and selecting the document description "Applicant response to Pre-Exam Formalities Notice". https://sportal.uspto.gov/authenticate/AuthenticateUserLocalEPF.html

For more information about EFS-Web please call the USPTO Electronic Business Center at **1-866-217-9197** or visit our website at http://www.uspto.gov/ebc.

If you are not using EFS-Web to submit your reply, you must include a copy of this notice.

/hteffera/

Office of Data Management, Application Assistance Unit (571) 272-4000, or (571) 272-4200, or 1-888-786-0101

UNITED STATES PATENT AND TRADEMARK OFFICE

UNITED STATES DEPARTMENT OF COMMERCE
United States Patent and Trademark Office
Address: COMMISSIONER FOR PATENTS
P.O. Box 1450
Alexandria, Virginia 22313-1450
www.uspto.gov

APPLICATION NUMBER	FILING or 371(c) DATE	GRP ART UNIT	FIL FEE REC'D	ATTY.DOCKET.NO	TOT CLAIMS	IND CLAIMS
14/275,136	05/12/2014	3711	1740	COB-13-1044CIP3-CON	40	4

CONFIRMATION NO. 9997

35811
IP GROUP OF DLA PIPER LLP (US)
ONE LIBERTY PLACE
1650 MARKET ST, SUITE 4900
PHILADELPHIA, PA 19103

FILING RECEIPT

OC000000068648019

Date Mailed: 05/28/2014

Receipt is acknowledged of this non-provisional patent application. The application will be taken up for examination in due course. Applicant will be notified as to the results of the examination. Any correspondence concerning the application must include the following identification information: the U.S. APPLICATION NUMBER, FILING DATE, NAME OF APPLICANT, and TITLE OF INVENTION. Fees transmitted by check or draft are subject to collection. Please verify the accuracy of the data presented on this receipt. **If an error is noted on this Filing Receipt, please submit a written request for a Filing Receipt Correction. Please provide a copy of this Filing Receipt with the changes noted thereon. If you received a "Notice to File Missing Parts" for this application, please submit any corrections to this Filing Receipt with your reply to the Notice. When the USPTO processes the reply to the Notice, the USPTO will generate another Filing Receipt incorporating the requested corrections**

Inventor(s)

Bernard J. Marantelli, London, UNITED KINGDOM;

Applicant(s)

Diogenes Limited, Douglas, ISLE OF MAN

Assignment For Published Patent Application

Diogenes Limited, Douglas, ISLE OF MAN

Power of Attorney:

Thomas Christenbury--31750
Paul Taufer--35703
Darius Gambino--41472
Richard Cruz--52783
William Bartow--54981
Michael Burns--57593
Lisa Lint--60856
Maxim Rapoport--67675

Domestic Priority data as claimed by applicant

This application is a CON of 13/958,028 08/02/2013 PAT 8721439
which is a CIP of 13/605,813 09/06/2012 PAT 8602884

Foreign Applications for which priority is claimed (You may be eligible to benefit from the **Patent Prosecution Highway** program at the USPTO. Please see http://www.uspto.gov for more information.) - None.
Foreign application information must be provided in an Application Data Sheet in order to constitute a claim to foreign priority. See 37 CFR 1.55 and 1.76.

Permission to Access - A proper **Authorization to Permit Access to Application by Participating Offices** (PTO/SB/39 or its equivalent) has been received by the USPTO.

If Required, Foreign Filing License Granted: 05/23/2014

The country code and number of your priority application, to be used for filing abroad under the Paris Convention, is **US 14/275,136**

Projected Publication Date: To Be Determined - pending completion of Corrected Papers

Non-Publication Request: No

Early Publication Request: No
**** SMALL ENTITY ****
Title

WAGERING APPARATUS, METHODS AND SYSTEMS

Preliminary Class

273

Statement under 37 CFR 1.55 or 1.78 for AIA (First Inventor to File) Transition Applications: No

PROTECTING YOUR INVENTION OUTSIDE THE UNITED STATES

Since the rights granted by a U.S. patent extend only throughout the territory of the United States and have no effect in a foreign country, an inventor who wishes patent protection in another country must apply for a patent in a specific country or in regional patent offices. Applicants may wish to consider the filing of an international application under the Patent Cooperation Treaty (PCT). An international (PCT) application generally has the same effect as a regular national patent application in each PCT-member country. The PCT process **simplifies** the filing of patent applications on the same invention in member countries, but **does not result** in a grant of "an international patent" and does not eliminate the need of applicants to file additional documents and fees in countries where patent protection is desired.

Almost every country has its own patent law, and a person desiring a patent in a particular country must make an application for patent in that country in accordance with its particular laws. Since the laws of many countries differ in various respects from the patent law of the United States, applicants are advised to seek guidance from specific foreign countries to ensure that patent rights are not lost prematurely.

Applicants also are advised that in the case of inventions made in the United States, the Director of the USPTO must issue a license before applicants can apply for a patent in a foreign country. The filing of a U.S. patent application serves as a request for a foreign filing license. The application's filing receipt contains further information and guidance as to the status of applicant's license for foreign filing.

Applicants may wish to consult the USPTO booklet, "General Information Concerning Patents" (specifically, the section entitled "Treaties and Foreign Patents") for more information on timeframes and deadlines for filing foreign patent applications. The guide is available either by contacting the USPTO Contact Center at 800-786-9199, or it can be viewed on the USPTO website at http://www.uspto.gov/web/offices/pac/doc/general/index.html.

For information on preventing theft of your intellectual property (patents, trademarks and copyrights), you may wish to consult the U.S. Government website, http://www.stopfakes.gov. Part of a Department of Commerce initiative, this website includes self-help "toolkits" giving innovators guidance on how to protect intellectual property in specific countries such as China, Korea and Mexico. For questions regarding patent enforcement issues, applicants may call the U.S. Government hotline at 1-866-999-HALT (1-866-999-4258).

LICENSE FOR FOREIGN FILING UNDER

Title 35, United States Code, Section 184

Title 37, Code of Federal Regulations, 5.11 & 5.15

GRANTED

The applicant has been granted a license under 35 U.S.C. 184, if the phrase "IF REQUIRED, FOREIGN FILING LICENSE GRANTED" followed by a date appears on this form. Such licenses are issued in all applications where the conditions for issuance of a license have been met, regardless of whether or not a license may be required as set forth in 37 CFR 5.15. The scope and limitations of this license are set forth in 37 CFR 5.15(a) unless an earlier license has been issued under 37 CFR 5.15(b). The license is subject to revocation upon written notification. The date indicated is the effective date of the license, unless an earlier license of similar scope has been granted under 37 CFR 5.13 or 5.14.

This license is to be retained by the licensee and may be used at any time on or after the effective date thereof unless it is revoked. This license is automatically transferred to any related applications(s) filed under 37 CFR 1.53(d). This license is not retroactive.

The grant of a license does not in any way lessen the responsibility of a licensee for the security of the subject matter as imposed by any Government contract or the provisions of existing laws relating to espionage and the national security or the export of technical data. Licensees should apprise themselves of current regulations especially with respect to certain countries, of other agencies, particularly the Office of Defense Trade Controls, Department of State (with respect to Arms, Munitions and Implements of War (22 CFR 121-128)); the Bureau of Industry and Security, Department of Commerce (15 CFR parts 730-774); the Office of Foreign AssetsControl, Department of Treasury (31 CFR Parts 500+) and the Department of Energy.

NOT GRANTED

No license under 35 U.S.C. 184 has been granted at this time, if the phrase "IF REQUIRED, FOREIGN FILING LICENSE GRANTED" DOES NOT appear on this form. Applicant may still petition for a license under 37 CFR 5.12, if a license is desired before the expiration of 6 months from the filing date of the application. If 6 months has lapsed from the filing date of this application and the licensee has not received any indication of a secrecy order under 35 U.S.C. 181, the licensee may foreign file the application pursuant to 37 CFR 5.15(b).

SelectUSA

The United States represents the largest, most dynamic marketplace in the world and is an unparalleled location for business investment, innovation, and commercialization of new technologies. The U.S. offers tremendous resources and advantages for those who invest and manufacture goods here. Through SelectUSA, our nation works to promote and facilitate business investment. SelectUSA provides information assistance to the international investor community; serves as an ombudsman for existing and potential investors; advocates on behalf of U.S. cities, states, and regions competing for global investment; and counsels U.S. economic development organizations on investment attraction best practices. To learn more about why the United States is the best country in the world to develop technology, manufacture products, deliver services, and grow your business, visit http://www.SelectUSA.gov or call +1-202-482-6800.

Attorney Docket No.: COB-13-1044CIP3-CON

COMMISSIONER FOR PATENTS
P.O. Box 1450
Alexandria, VA 22313-1450

Customer No. 035811

Sir:

Transmitted herewith for filing is the patent application of

Inventor(s): Bernard J. Marantelli

For: WAGERING APPARATUS, METHODS AND SYSTEMS

We submit herewith:

x 40 pages of Specification, 8 pages of Claims, 1 page Abstract, 5 pages of Drawings
x Combined Declaration/Assignment document filed in parent application US Serial No. 13/958,028
x Application Data Sheet
x Power of Attorney by Applicant
x Information Disclosure Statement with Form PTO-1449 and copy of four (4) publication(s)

The filing fee has been calculated as shown below:

For	Number Filed	Number Extra	SMALL ENTITY Rate	SMALL ENTITY Fee		OTHER THAN SMALL ENTITY Rate	OTHER THAN SMALL ENTITY Fee
Basic Fee (electronically filed)	---	---	$70.00	$ 70.00	OR	$280.00	$
Search Fee	---	---	$300.00	$ 300.00		$600.00	$
Examination Fee	---	---	$360.00	$ 360.00		$720.00	$
Total Claims	40 Minus 20 =	20	x 40.00 =	$ 800.00		x 80.00 =	$
Independent Claims	4 Minus 3 =	1	x 210.00 =	$ 210.00		x 420.00 =	$
Application Size Fee	If the specification and drawings exceed 100 sheets of paper, the application size feedue is $400 ($200 for small entity) for each additional 50 sheets or fraction thereof.		$200.00	$ 0.00		$400.00	$
Multiple Dependent Claim(s) Present			$390.00	$ 0.00		$780.00	$

TOTAL FEE $1,740.00 OR $_____

x Please charge my Deposit Account No. 50-2719 in the amount of **$1,740.00**.

x In regard to this communication, the Commissioner is hereby authorized to charge payment of any additional filing fees required under 37 CFR §1.16 and any additional patent application processing fees under 37 CFR §1.17 or credit any overpayment to Deposit Account No. 50-2719.

x During the pendency of this application, the Commissioner is hereby authorized to charge payment of any filing fees for presentation of extra claims under 37 CFR §1.16 and any patent application processing fees under 37 CFR §1.17 or credit any overpayment to Deposit Account No. 50-2719.

Respectfully submitted,

Paul A. Taufer, Reg. No. 35,703

Date: May 12, 2014
PAT/nn
(215) 656-3385

EAST\76251964.1

Attorney Docket No.: COB-13-1044CIP3-CON

COMMISSIONER FOR PATENTS
P.O. Box 1450
Alexandria, VA 22313-1450

Customer No. 035811

Sir:

Transmitted herewith for filing is the patent application of

Inventor(s): Bernard J. Marantelli

For: WAGERING APPARATUS, METHODS AND SYSTEMS

We submit herewith:

x 40 pages of Specification, 8 pages of Claims, 1 page Abstract, 5 pages of Drawings
x Combined Declaration/Assignment document filed in parent application US Serial No. 13/958,028
x Application Data Sheet
x Power of Attorney by Applicant
x Information Disclosure Statement with Form PTO-1449 and copy of four (4) publication(s)

The filing fee has been calculated as shown below:

For	Number Filed	Number Extra	SMALL ENTITY Rate	SMALL ENTITY Fee		OTHER THAN SMALL ENTITY Rate	OTHER THAN SMALL ENTITY Fee
Basic Fee (electronically filed)	---	---	$70.00	$ 70.00	OR	$280.00	$
Search Fee	---	---	$300.00	$ 300.00		$600.00	$
Examination Fee	---	---	$360.00	$ 360.00		$720.00	$
Total Claims	40 Minus 20 =	20	x 40.00 =	$ 800.00		x 80.00 =	$
Independent Claims	4 Minus 3 =	1	x 210.00 =	$ 210.00		x 420.00 =	$
Application Size Fee	If the specification and drawings exceed 100 sheets of paper, the application size feedue is $400 ($200 for small entity) for each additional 50 sheets or fraction thereof.		$200.00	$ 0.00		$400.00	$
Multiple Dependent Claim(s) Present			$390.00	$ 0.00		$780.00	$

TOTAL FEE $1,740.00 OR $_____

x Please charge my Deposit Account No. 50-2719 in the amount of **$1,740.00**.

x In regard to this communication, the Commissioner is hereby authorized to charge payment of any additional filing fees required under 37 CFR §1.16 and any additional patent application processing fees under 37 CFR §1.17 or credit any overpayment to Deposit Account No. 50-2719.

x During the pendency of this application, the Commissioner is hereby authorized to charge payment of any filing fees for presentation of extra claims under 37 CFR §1.16 and any patent application processing fees under 37 CFR §1.17 or credit any overpayment to Deposit Account No. 50-2719.

Respectfully submitted,

Paul A. Taufer, Reg. No. 35,703

Date: May 12, 2014
PAT/nn
(215) 656-3385

EAST\76251964.1

PTO/AIA/14 (11-13)
Approved for use through 01/31/2014. OMB 0651-0032
U.S. Patent and Trademark Office; U.S. DEPARTMENT OF COMMERCE
Under the Paperwork Reduction Act of 1995, no persons are required to respond to a collection of information unless it contains a valid OMB control number.

Application Data Sheet 37 CFR 1.76	Attorney Docket Number	COB-13-1044CIP3-CON
	Application Number	
Title of Invention	WAGERING APPARATUS, METHODS AND SYSTEMS	

The application data sheet is part of the provisional or nonprovisional application for which it is being submitted. The following form contains the bibliographic data arranged in a format specified by the United States Patent and Trademark Office as outlined in 37 CFR 1.76.
This document may be completed electronically and submitted to the Office in electronic format using the Electronic Filing System (EFS) or the document may be printed and included in a paper filed application.

Secrecy Order 37 CFR 5.2

☐ Portions or all of the application associated with this Application Data Sheet may fall under a Secrecy Order pursuant to 37 CFR 5.2 (Paper filers only. Applications that fall under Secrecy Order may not be filed electronically.)

Inventor Information:

Inventor 1 Remove

Legal Name

Prefix	Given Name	Middle Name	Family Name	Suffix
	Bernard	J.	Marantelli	

Residence Information (Select One) ○ US Residency ◉ Non US Residency ○ Active US Military Service

City	London	Country of Residence i	UK

Mailing Address of Inventor:

Address 1	89B Fitzjohns Avenue		
Address 2			
City	London	**State/Province**	
Postal Code	NW3 6NX	**Country** i	UK

All Inventors Must Be Listed - Additional Inventor Information blocks may be generated within this form by selecting the **Add** button. Add

Correspondence Information:

Enter either Customer Number or complete the Correspondence Information section below.
For further information see 37 CFR 1.33(a).

☐ **An Address is being provided for the correspondence Information of this application.**

Customer Number	35811		
Email Address	pto.phil@dlapiper.com	Add Email	Remove Email

Application Information:

Title of the Invention	WAGERING APPARATUS, METHODS AND SYSTEMS		
Attorney Docket Number	COB-13-1044CIP3-CON	**Small Entity Status Claimed**	☒
Application Type	Nonprovisional		
Subject Matter	Utility		
Total Number of Drawing Sheets (if any)	5	**Suggested Figure for Publication (if any)**	

Under the Paperwork Reduction Act of 1995, no persons are required to respond to a collection of information unless it contains a valid OMB control number.

Application Data Sheet 37 CFR 1.76	Attorney Docket Number	COB-13-1044CIP3-CON
	Application Number	
Title of Invention	WAGERING APPARATUS, METHODS AND SYSTEMS	

Publication Information:

☐ Request Early Publication (Fee required at time of Request 37 CFR 1.219)

☐ **Request Not to Publish.** I hereby request that the attached application not be published under 35 U.S.C. 122(b) and certify that the invention disclosed in the attached application **has not and will not** be the subject of an application filed in another country, or under a multilateral international agreement, that requires publication at eighteen months after filing.

Representative Information:

Representative information should be provided for all practitioners having a power of attorney in the application. Providing this information in the Application Data Sheet does not constitute a power of attorney in the application (see 37 CFR 1.32).
Either enter Customer Number or complete the Representative Name section below. If both sections are completed the customer Number will be used for the Representative Information during processing.

Please Select One:	◉ Customer Number	◯ US Patent Practitioner	◯ Limited Recognition (37 CFR 11.9)
Customer Number	35811		

Domestic Benefit/National Stage Information:

This section allows for the applicant to either claim benefit under 35 U.S.C. 119(e), 120, 121, or 365(c) or indicate National Stage entry from a PCT application. Providing this information in the application data sheet constitutes the specific reference required by 35 U.S.C. 119(e) or 120, and 37 CFR 1.78.
When referring to the current application, please leave the application number blank.

Prior Application Status	Pending		Remove
Application Number	Continuity Type	Prior Application Number	Filing Date (YYYY-MM-DD)
	Continuation of	13958028	2013-08-02
Prior Application Status	Patented		Remove

Application Number	Continuity Type	Prior Application Number	Filing Date (YYYY-MM-DD)	Patent Number	Issue Date (YYYY-MM-DD)
13958028	Continuation in part of	13605813	2012-09-06	8602884	2013-12-10

Additional Domestic Benefit/National Stage Data may be generated within this form by selecting the **Add** button. Add

Foreign Priority Information:

This section allows for the applicant to claim priority to a foreign application. Providing this information in the application data sheet constitutes the claim for priority as required by 35 U.S.C. 119(b) and 37 CFR 1.55(d). When priority is claimed to a foreign application that is eligible for retrieval under the priority document exchange program (PDX) the information will be used by the Office to automatically attempt retrieval pursuant to 37 CFR 1.55(h)(1) and (2). Under the PDX program, applicant bears the ultimate responsibility for ensuring that a copy of the foreign application is received by the Office from the participating foreign intellectual property office, or a certified copy of the foreign priority application is filed, within the time period specified in 37 CFR 1.55(g)(1).

Application Data Sheet 37 CFR 1.76	Attorney Docket Number	COB-13-1044CIP3-CON
	Application Number	
Title of Invention	WAGERING APPARATUS, METHODS AND SYSTEMS	

Remove

Application Number	Country [i]	Filing Date (YYYY-MM-DD)	Access Code[i] (if applicable)

Additional Foreign Priority Data may be generated within this form by selecting the **Add** button. Add

Statement under 37 CFR 1.55 or 1.78 for AIA (First Inventor to File) Transition Applications

☐ This application (1) claims priority to or the benefit of an application filed before March 16, 2013 and (2) also contains, or contained at any time, a claim to a claimed invention that has an effective filing date on or after March 16, 2013.
NOTE: By providing this statement under 37 CFR 1.55 or 1.78, this application, with a filing date on or after March 16, 2013, will be examined under the first inventor to file provisions of the AIA.

Authorization to Permit Access:

☒ Authorization to Permit Access to the Instant Application by the Participating Offices

If checked, the undersigned hereby grants the USPTO authority to provide the European Patent Office (EPO), the Japan Patent Office (JPO), the Korean Intellectual Property Office (KIPO), the World Intellectual Property Office (WIPO), and any other intellectual property offices in which a foreign application claiming priority to the instant patent application is filed access to the instant patent application. See 37 CFR 1.14(c) and (h). This box should not be checked if the applicant does not wish the EPO, JPO, KIPO, WIPO, or other intellectual property office in which a foreign application claiming priority to the instant patent application is filed to have access to the instant patent application.

In accordance with 37 CFR 1.14(h)(3), access will be provided to a copy of the instant patent application with respect to: 1) the instant patent application-as-filed; 2) any foreign application to which the instant patent application claims priority under 35 U.S.C. 119(a)-(d) if a copy of the foreign application that satisfies the certified copy requirement of 37 CFR 1.55 has been filed in the instant patent application; and 3) any U.S. application-as-filed from which benefit is sought in the instant patent application.

In accordance with 37 CFR 1.14(c), access may be provided to information concerning the date of filing this Authorization.

Applicant Information:

Providing assignment information in this section does not substitute for compliance with any requirement of part 3 of Title 37 of CFR to have an assignment recorded by the Office.

PTO/AIA/14 (11-13)
Approved for use through 01/31/2014. OMB 0651-0032
U.S. Patent and Trademark Office; U.S. DEPARTMENT OF COMMERCE
Under the Paperwork Reduction Act of 1995, no persons are required to respond to a collection of information unless it contains a valid OMB control number.

Application Data Sheet 37 CFR 1.76	Attorney Docket Number	COB-13-1044CIP3-CON
	Application Number	
Title of Invention	WAGERING APPARATUS, METHODS AND SYSTEMS	

Applicant 1 Remove

If the applicant is the inventor (or the remaining joint inventor or inventors under 37 CFR 1.45), this section should not be completed. The information to be provided in this section is the name and address of the legal representative who is the applicant under 37 CFR 1.43; or the name and address of the assignee, person to whom the inventor is under an obligation to assign the invention, or person who otherwise shows sufficient proprietary interest in the matter who is the applicant under 37 CFR 1.46. If the applicant is an applicant under 37 CFR 1.46 (assignee, person to whom the inventor is obligated to assign, or person who otherwise shows sufficient proprietary interest) together with one or more joint inventors, then the joint inventor or inventors who are also the applicant should be identified in this section.

Clear

◉ Assignee	○ Legal Representative under 35 U.S.C. 117	○ Joint Inventor
○ Person to whom the inventor is obligated to assign.	○ Person who shows sufficient proprietary interest	

If applicant is the legal representative, indicate the authority to file the patent application, the inventor is:

Name of the Deceased or Legally Incapacitated Inventor :

If the Applicant is an Organization check here. ☒

Organization Name	Diogenes Limited		
Mailing Address Information:			
Address 1	PO Box 227, Clinch's House, Lord Street		
Address 2			
City	Douglas	**State/Province**	
Country i	IM	Postal Code	IM99 1RZ
Phone Number		Fax Number	
Email Address			

Additional Applicant Data may be generated within this form by selecting the Add button. Add

Assignee Information including Non-Applicant Assignee Information:

Providing assignment information in this section does not subsitute for compliance with any requirement of part 3 of Title 37 of CFR to have an assignment recorded by the Office.

Assignee 1

Complete this section if assignee information, including non-applicant assignee information, is desired to be included on the patent application publication . An assignee-applicant identified in the "Applicant Information" section will appear on the patent application publication as an applicant. For an assignee-applicant, complete this section only if identification as an assignee is also desired on the patent application publication.

Remove

If the Assignee or Non-Applicant Assignee is an Organization check here. ☐

Under the Paperwork Reduction Act of 1995, no persons are required to respond to a collection of information unless it contains a valid OMB control number.

Application Data Sheet 37 CFR 1.76	Attorney Docket Number	COB-13-1044CIP3-CON
	Application Number	
Title of Invention	WAGERING APPARATUS, METHODS AND SYSTEMS	

Prefix	**Given Name**	Middle Name	**Family Name**	Suffix

Mailing Address Information For Assignee including Non-Applicant Assignee:

Address 1			
Address 2			
City		**State/Province**	
Country i		Postal Code	
Phone Number		Fax Number	
Email Address			

Additional Assignee or Non-Applicant Assignee Data may be generated within this form by selecting the Add button. Add

Signature:

Remove

NOTE: This form must be signed in accordance with 37 CFR 1.33. See 37 CFR 1.4 for signature requirements and certifications

Signature	/PAT/			Date (YYYY-MM-DD)	2014-05-12
First Name	Paul	Last Name	Taufer	Registration Number	35703

Additional Signature may be generated within this form by selecting the Add button. Add

This collection of information is required by 37 CFR 1.76. The information is required to obtain or retain a benefit by the public which is to file (and by the USPTO to process) an application. Confidentiality is governed by 35 U.S.C. 122 and 37 CFR 1.14. This collection is estimated to take 23 minutes to complete, including gathering, preparing, and submitting the completed application data sheet form to the USPTO. Time will vary depending upon the individual case. Any comments on the amount of time you require to complete this form and/or suggestions for reducing this burden, should be sent to the Chief Information Officer, U.S. Patent and Trademark Office, U.S. Department of Commerce, P.O. Box 1450, Alexandria, VA 22313-1450. DO NOT SEND FEES OR COMPLETED FORMS TO THIS ADDRESS. **SEND TO: Commissioner for Patents, P.O. Box 1450, Alexandria, VA 22313-1450.**

Privacy Act Statement

The Privacy Act of 1974 (P.L. 93-579) requires that you be given certain information in connection with your submission of the attached form related to a patent application or patent. Accordingly, pursuant to the requirements of the Act, please be advised that: (1) the general authority for the collection of this information is 35 U.S.C. 2(b)(2); (2) furnishing of the information solicited is voluntary; and (3) the principal purpose for which the information is used by the U.S. Patent and Trademark Office is to process and/or examine your submission related to a patent application or patent. If you do not furnish the requested information, the U.S. Patent and Trademark Office may not be able to process and/or examine your submission, which may result in termination of proceedings or abandonment of the application or expiration of the patent.

The information provided by you in this form will be subject to the following routine uses:

1. The information on this form will be treated confidentially to the extent allowed under the Freedom of Information Act (5 U.S.C. 552) and the Privacy Act (5 U.S.C. 552a). Records from this system of records may be disclosed to the Department of Justice to determine whether the Freedom of Information Act requires disclosure of these records.

2. A record from this system of records may be disclosed, as a routine use, in the course of presenting evidence to a court, magistrate, or administrative tribunal, including disclosures to opposing counsel in the course of settlement negotiations.

3. A record in this system of records may be disclosed, as a routine use, to a Member of Congress submitting a request involving an individual, to whom the record pertains, when the individual has requested assistance from the Member with respect to the subject matter of the record.

4. A record in this system of records may be disclosed, as a routine use, to a contractor of the Agency having need for the information in order to perform a contract. Recipients of information shall be required to comply with the requirements of the Privacy Act of 1974, as amended, pursuant to 5 U.S.C. 552a(m).

5. A record related to an International Application filed under the Patent Cooperation Treaty in this system of records may be disclosed, as a routine use, to the International Bureau of the World Intellectual Property Organization, pursuant to the Patent Cooperation Treaty.

6. A record in this system of records may be disclosed, as a routine use, to another federal agency for purposes of National Security review (35 U.S.C. 181) and for review pursuant to the Atomic Energy Act (42 U.S.C. 218(c)).

7. A record from this system of records may be disclosed, as a routine use, to the Administrator, General Services, or his/her designee, during an inspection of records conducted by GSA as part of that agency's responsibility to recommend improvements in records management practices and programs, under authority of 44 U.S.C. 2904 and 2906. Such disclosure shall be made in accordance with the GSA regulations governing inspection of records for this purpose, and any other relevant (i.e., GSA or Commerce) directive. Such disclosure shall not be used to make determinations about individuals.

8. A record from this system of records may be disclosed, as a routine use, to the public after either publication of the application pursuant to 35 U.S.C. 122(b) or issuance of a patent pursuant to 35 U.S.C. 151. Further, a record may be disclosed, subject to the limitations of 37 CFR 1.14, as a routine use, to the public if the record was filed in an application which became abandoned or in which the proceedings were terminated and which application is referenced by either a published application, an application open to public inspections or an issued patent.

9. A record from this system of records may be disclosed, as a routine use, to a Federal, State, or local law enforcement agency, if the USPTO becomes aware of a violation or potential violation of law or regulation.

POWER OF ATTORNEY BY APPLICANT

I hereby appoint the Practitioners named below as our attorneys or agents, and to transact all business in the United States Patent and Trademark Office connected therewith for the application referenced in the attached Transmittal for Power of Attorney to One or More Registered Practitioners:

T. Daniel Christenbury	Reg. No. 31,750
Paul A. Taufer	Reg. No. 35,703
Darius C. Gambino	Reg. No. 41,472
Richard L. Cruz	Reg. No. 52,783
William L. Bartow	Reg. No. 54,981
Michael L. Burns IV	Reg. No. 57,593
Lisa M. Lint	Reg. No. 60,856
Maxim Rapoport	Reg. No. 67,675

Please recognize or change the correspondence address for the application identified in the attached Transmittal for Power of Attorney to One or More Registered Practitioners to:

035811

I am the Applicant:

☐Inventor or Joint Inventor
☐Legal Representative of a Deceased or Legally Incapacitated Inventor
☒Assignee or Person to Whom the Inventor is Under an Obligation to Assign
☐Person Who Otherwise Shows Sufficient Proprietary Interest (e.g. a petition under 37 CFR 1.46(b)(2) was granted in the application or is concurrently being filed with this document)

DIOGENES LIMITED

Date: 02.08.2013

By: M. Connolly

Name: M. Bernard G. Connolly

Title: DIRECTOR DIRECTOR

EAST\56958906.1

COB-13-1044CIP3

COMBINED DECLARATION/ASSIGNMENT

WHEREAS, I

Bernard J. Marantelli of London, UK

(hereinafter referred to as "the undersigned"), have made an invention entitled POOL WAGERING APPARATUS, METHODS AND SYSTEMS, identified in US Application No. 13/958,028, (DLA Piper is authorized to insert the Serial No. when known),

the above-identified application was made or authorized to be made by the person executing this Declaration;

I believe that I am the original inventor of the claimed invention in the application;

I hereby acknowledge that any willful false statement made in this Declaration is punishable under 18 USC §1001 by fine or imprisonment of not more than five (5) years, or both.

WHEREAS, Diogenes Limited, with offices at PO Box 227, Clinch's House, Lord Street, Douglas, Isle of Man, IM 99 1RZ (hereinafter referred to as "assignee"), is desirous of acquiring the entire right, title and interest in said invention, said US application and all letters patent issuing for said invention,

NOW, THEREFORE, in consideration of One Dollar ($1.00) and of other good and valuable consideration, receipt of which is hereby acknowledged, the undersigned, intending to be legally bound, does hereby sell, assign and transfer to the assignee the entire right, title and interest, for the United States of America, its territories and possessions, and for all foreign countries, in said invention, including said US application, all divisions and continuations thereof, all rights to claim priority based thereon, all rights to file foreign applications on said invention, and all letters patent and reissues thereof, issuing for said invention in the United States of America and in any and all foreign countries.

It is agreed that the undersigned shall be legally bound, upon request of the assignee, or its successors or assigns or a legal representative thereof, to supply all information and evidence of which the undersigned has knowledge or possession, relating to the making and practice of said invention, to testify in any legal proceeding relating thereto, to execute all instruments proper to patent the invention in the United States of America and foreign countries in the name of the assignee, and to execute all instruments proper to carry out the intent of this instrument. If the undersigned includes more than one individual, these obligations shall apply to all of the undersigned both individually and collectively.

The rights and property herein conveyed by the undersigned are free and clear of any encumbrance.

EXECUTED on the dates set forth below.

01/08/13
Date

B Marantelli
Bernard J. Marantelli

EAST\55313516.1
01/Aug

WAGERING APPARATUS, METHODS AND SYSTEMS

BACKGROUND

[0001] There are a range of betting and lottery products in the market. For example, there are pure pool betting products, such as the Pick 6 horse racing product in the United States and the Scoop 6 racing product (among others) in the United Kingdom. There are also sports betting products such as soccer individual games and/or pool wagering products. Pick 6 and Scoop 6 provides a six leg jackpot type bet that may also include a bonus pool and consolation prizes. The product type is relatively successful and provides players with a chance to win a large sum by betting on six races on a given race day. Similar multiple leg pool wagering is allowed for other types of racing events and multiple sports events.

[0002] In the United Kingdom, there also presently exists a free to play game offered by Skybet, the 'Super 6' whereby players are allowed to make just one set of soccer correct score selections to try to win a guaranteed payout. The Super 6 also has some similarities to the traditional soccer pools product but is different in that it is not predicting draws and only six selections are necessary. Many countries have similar pool products where players are asked to select winners in six or seven horse or dog races and can win a share of a large pool. In the United States, numerous states have lotteries where players select for example six numbers and purchase a lottery ticket for a specific drawing. There is also a "Mega Millions" game in which several states participate in a pooled jackpot. The correct selection of all six numbers allows the ticket bearer to claim all or a portion of the pooled jackpot, depending on the number of winning tickets.

[0003] The traditional soccer pools products in the United Kingdom offer a large payout if the player can select a large number of matches that result in a draw – particularly a score draw. Within soccer betting, correct score betting is the second most popular market after the central Home/Draw/Away ("H/D/A") markets. A prominent United Kingdom based betting and gaming company recently reported that 84% of its retail (i.e. in betting shops) soccer bets were coupon based accumulators. Almost 90% of those are on four-fold and above. A four-fold is four selections, so 90% of the bets are on four selections and more. By comparison, in online betting, twice as many bets are singles as is the case in betting shops, and only 55% are four-fold and above.

[0004] Within this market segment, there is a need for new products to generate and maintain consumer interest.

SUMMARY

[0005] The present disclosure is directed to a market gap for the creation of a unique betting product where players make selections in a number of different legs which, as defined below, can include any of a variety of different discrete events (e.g., an auto race), partial events (e.g., an inning of a baseball game, a set in tennis), components of events (e.g., one or more at bats by a particular player in baseball game or numbers selected in a particular position in a lottery drawing), multiple independent events (e.g., two football games that may occur sequentially or concurrently) and/or compilations of events (e.g., a championship series). Those players who correctly select all (or some predefined portion) of the winners of each leg have an opportunity to solely obtain and/or share in the proceeds of the stakes of all the other players, less any applicable deduction to cover operating costs and/or operator profit, and have the opportunity to win a prize. For example, in multi-leg event pools, prizes may include without limit a full or fractional portion of a Jackpot Pool (e.g., for all correct selections), potentially a Bonus Pool (e.g., for one additional outcome the following week, game, or event) and/or a possible Consolation Pool (e.g., for a subset of correct selections, or other pre-defined forms of partial correctness, such as, for example: did a horse place for consolation, rather than win for jackpot). As another example, if the multi-leg event accommodates accumulator or parlay wagering, the players that correctly select the outcomes of each leg (or any other number of designated legs, for instance) have an opportunity to solely obtain and/or share one or more prizes.

[0006] In either case, if no player selects a correct winning combination of results, as one example, the amounts staked available to win may be carried forward until a next betting cycle, for example the next week, and may be available to win by anyone selecting a correct combination of outcomes, or alternatively all or any portion of the amounts staked available to win may be retained by an operator or other designated entity. As should be understood, although not explicitly disclosed herein, there are many other outcome for how the amounts staked available to win may be handled and/or disposed of, and should be considered incorporated herein.

[0007] However, to ensure that a significant prize is available in the first cycle or first week or after a prize is claimed, in one example it is contemplated that there may be an operator

DraftKings, Ex. 1002, p. 207

guaranteed amount available to win each time the games are played, at least until significant reserves have been built up.

[0008] Notably, various implementations may be betting scenarios or alternatively in other implementations players may choose to play just for fun, where no stakes are actually wagered. A unique differentiator of the product of the present disclosure may be that at any desired time after initiation of an event (such as at any time after a "ticket" is purchased until completion of an event, after each leg has been completed, between legs, including potentially as a leg is "in-play", and/or during a designated span of time before, during and/or after any of the legs), any desired number of players who remain eligible for a prize (and potentially those still eligible for bonus and/or consolation prizes) or to win or have correct (win) predictions for each of the events or legs that are completed, may be offered a "buy-out" or an opportunity to sell their tickets (in whole or alternatively may be in part (i.e., a fractional amount) to the game operator or through the game operator (or alternatively directly) to a third party (e.g., one or more system operator(s), business entity or entities such as a merchant(s), one or more other persons, other player(s), etc.). Thus, for example, the game operator (or any other entity) may offer the player a fractional amount of the potential Jackpot Pool to buy the ticket for the still pending game(s) and thereby provide the player the opportunity to cash in and avoid the risk of being eliminated on a later leg or the final event. In other examples, a ticket held by players may be comprised of one or more divisions, and the buy-out offer or sale may involve just certain divisions of the ticket, so that those divisions are sold but the player retains ownership of the remaining divisions of the ticket. In yet another example, a ticket held by a player may include an accumulator or parlay wager, in which case the player may receive (or initiate) a buy-out offer or sale for a fractional amount of a prize (e.g., a jackpot), and which may occur at any time, such as before, during and/or after any of the legs specified by the wager have been completed.

[0009] In addition to the Jackpot Pool or final Jackpot, there are other pools that could form part of the pool game. Part of the amount staked could be reserved to provide one or more Consolation Pool(s) which may be won by those who correctly select a portion of the correct outcomes or another consolation scenario. As an example, a player may be eligible for a Consolation Pool by selecting "any 5" of a Breeder's Cup Pick 6 pool, 5 of 7 such as V75 (a Swedish multi-leg pool bet based on the sport of 'trotting'), or every selection "placed" in the event every selection did not win, as is the consolations in the UK scoop6. In addition, another

DraftKings, Ex. 1002, p. 208

part of the amount staked could be reserved to provide a Bonus Pool which will be available to winners of the main pool, if they are able to select additional outcomes after they have successfully won the Jackpot Pool. In addition, the players that correctly select the winners of any number of legs can also win one or more interim Jackpots that occurs prior to completion of the event. Thus, the amount staked for the various interim Jackpots would be different than the final Jackpot, which occurs where there is a winner(s) of the last leg that occurs at the end of the event. When either of these pools are offered, any purchaser of a ticket such as the operator discussed above would become the owner of the rights in the ticket with respect to the opportunity to win the Consolation Pool(s), interim Jackpot(s) or Bonus Pool.

BRIEF DESCRIPTION OF THE DRAWINGS

[0010] FIG. 1 is a schematic representation of a wagering system hardware and network connected to various wagering stations or wagering terminals and other devices which may be used in accordance with an aspect of the present disclosure.

[0011] FIG. 2 is a more detailed schematic representation of the wagering system hardware and network that controls the operation of the system of FIG. 1.

[0012] FIG. 3 is a block diagram of the functional architecture of a program for the wagering system hardware of Fig. 2.

[0013] FIG. 4 is a table depicting goal expectancy for six years across the main soccer leagues and the World Cup.

[0014] FIG. 5 is an exemplary flow chart of the logic of the software subroutine program of the central server system.

DETAILED DESCRIPTION

[0015] The present disclosure is directed to a new betting product developed for a wide range of applications, including any event where betting may be utilized or even scenarios where play is just for fun, such as, and without limitation, any type of actual or virtual sporting event or any type of game; for instance, one implementation may apply to the most globally bet upon sport in the world, soccer and specifically United Kingdom Premier League soccer. The concept, however, has more widespread applications and potential appeal, and thus it may be applied to other types of sporting events (i.e., American football, horse racing, car racing, hockey, baseball, basketball, lacrosse, wrestling, just as a few examples) as well as being expanded to other events such as games (both virtual and real), including but not limited to, virtual and real card games

DraftKings, Ex. 1002, p. 209

(e.g., jacks, poker, blackjack, Texas hold 'em, etc.), lotteries, racing, slot machines and other multi-leg/multi-events/multi-outcome or divisible games (such as games or sets in tennis, innings in baseball, etc.), or any combinations of desired events. Further, the betting product of the present disclosure is suitable for "betting for fun," which is betting with no actual stakes at risk.

[0016] FIG. 1 is a schematic of an exemplary wagering system hardware and network that will be used herein to describe and illustrate one implementation of the present disclosure. The system includes a network, including a system controller, for example, such as based on a central server system 12 being interconnected through the internet 10 to a plurality of wager input devices such as wagering stations 14, wagering terminals (including self-service wagering terminals) 16, and internet connected computing systems 18, smart phones 20, tablet computers 22 and televisions 24 each of which is representative of a plurality of each type of wager input device (e.g. wagering stations 14A-N). As should be understood the term "system controller" should be broadly construed to comprise any hardware device or devices that includes at least one central processing unit (CPU) or other processing device and associated memory. As will also be discussed below, the concepts herein may also be applied to gaming machines, so gaming machine 26 is depicted as an additional input device to the central server system 12 in Fig. 1. The term "leg" as used herein should be broadly construed and may comprise any desired number of individual components of any type of event, such as any type of game or sporting event. For example, and without limitation, a leg may comprise a sporting event in its entirety, such as a soccer game, American football game, horse race, car race, hockey game, baseball game, basketball game, lacrosse game, wrestling match, etc., any portion of a sporting event, such as an inning of baseball, a half of a soccer game, a single horse race, a quarter of an American football game, a single wrestling match, etc., an occurrence within an event or game, such as a particular player scoring a goal (e.g., in hockey or soccer) or a particular player getting a hit in a baseball game, or a combination of games or events such as the World Series in baseball or any other sports playoff series. In addition, as an example and without limitation, a leg may comprise any desired number of individual components of any game or a game in its entirety, virtual and real, such as, for instance, and without limitation, keno, jacks, poker, blackjack, Texas hold 'em, racing, video games (including live and online video games, as examples), slot machines and lotteries, etc. As one example, with respect to slot machines, a separate leg may correspond to each reel (whether virtual or mechanical), or any particular

DraftKings, Ex. 1002, p. 210

number or designated reels, of the slot machine. As another example, with respect to a lottery, a separate leg may correspond to each item, or any particular number or designated items, used to determine who may have won a given lottery, such as numbered balls. As another example, with respect to a card game (e.g., whether virtual or mechanical, etc.), a separate leg may correspond to each card, or any particular number or designated cards, that are played in a given card game. As should be understood, however, the amount and nature of the individual components that comprises a leg may vary widely in a given application as may be desired, such as ranging anywhere from one (i.e., an entire event) to a plurality of individual components (i.e., parts of an event, such as reels of a slot machine, numbers in a lottery, cards in a card game, portions of a game or sporting event, etc.).

[0017] The wager stations 14 and wagering terminals 16 of FIG. 1 are depicted in an exemplary only embodiments, but as known in the art they may include a support structure, housing or cabinet which provides support for a plurality of displays, inputs, controls and other features of a conventional wager terminal. The wagering stations 14 may be configured so that users can be the party placing a wager, while the wagering terminals 16 may be configured for an operator at a commercial location such as a store or betting facility. The wager stations 14 and wagering terminals 16 may be positioned on a base or stand or can be configured as a table-top which a user can operate preferably while sitting. The wagering stations 14 and wagering terminals 16 may further include a device for accepting a monetary value associated with a wager wherein the device may include, for example, a coin collector, a bill collector or a card reader. The wagering stations 14 and wagering terminals 16 may further include one or more of a display, a card reader/writer and/or a ticket and/or voucher printer to visually display, store on a card and/or a player account(s), and/or print wager receipts and potentially vouchers representing cash-out values and successful play awards (e.g., an "award" or "awards" as defined herein shall be broadly construed and shall include, without limitation, a designated currency, virtual currency, tokens, credits, coupons, services, personal or real property, virtual property, assets, investments, negotiable instruments (such as checks), commodities, food, lodging, entertainment, alleviation of obligations, gaming opportunities, wager enhancement and/or any other benefit(s) or portions thereof that may be provided or otherwise offered to a player). The wagering stations 14 and wagering terminals 16 may also include a ticket or voucher reader and/or a dispenser for dispensing a monetary amount, such as, without limitation, cash, virtual currency and/or tokens,

DraftKings, Ex. 1002, p. 211

etc. For example, the ticket or voucher reader may be adapted to read and allocate credits or other value associated with a ticket or voucher to one or more players and/or player accounts. The bill collector, ticket or voucher reader and dispenser may be separate or integrated into a single sub-unit.

[0018] The wager stations 14 and wagering terminals 16 preferably include at least one processor, such as a microprocessor, a microcontroller-based platform, a suitable integrated circuit or one or more application-specific integrated circuits (ASIC's). The processor is in communication with or operable to access or to exchange signals with at least one data storage or memory device. The processor and the memory device reside within the cabinet. The memory device stores program code and instructions, executable by the processor, to control the wager stations 14 and wagering terminals 16 and communicate with the central server system 12. The memory device also stores other data such as image data, event data, user input data, ticket tracking assignment generators, pay-table data or information and applicable rules that relate to the operation of the wager stations 14 and wagering terminals 16 and the particular type of buy-out method and process described herein.

[0019] It is also contemplated that an operator or a player can use a computing system 18, such as a desktop computer, a laptop personal computer, a personal digital assistant (PDA) or smartphone 20, portable tablet computing device 22, or other computerized platform or interactive web-enabled television 24 to access the central server system 12 via a network, internet or intranet, so as to initiate a wager and access the collective wagering pool. In this implementation, it is contemplated the users' devices would also receive messages and the buy-out offers discussed below from the pool operator via the central server system 12, so that the individual user could participate in the wagering system and buy-back option via the user's connected device.

[0020] It is contemplated that the wager stations 14, wager terminals 16 and/or personal computing systems 18, as well as the smart phones 20, tablet computers 22 and televisions 24 disclosed herein may be operable over a wired or wireless network, such as part of a wired or wireless wagering system. In this embodiment, the computing systems 18 may be a hand held device, a mobile device or any other suitable wireless device that enables a user to participate in the pooled wagering system at any suitable location. It is contemplated that the computing systems 18 or at least the server system as disclosed herein may be a device that has obtained

DraftKings, Ex. 1002, p. 212

approval from a regulatory agency or commission or a device that has not obtained or require approval from a regulatory agency or commission. FIG. 2 is a more detailed schematic representation of the wagering system hardware of the central server system 12 that controls the operation of the system of FIG. 1. The central server system 12 may include one or more rack mounted server computers 120 each with at least one central processing unit (CPU) or other processing device and associated memory. As an example only, the rack mounted server computers 120 of FIG. 2 may be PowerEdge R420 Rack Chassis devices having a 300 GB hard drive, one or two Intel Xeon E5-2450 processors, 24 GB memories with RAID connectivity using a RAID controller card. One or more of the computers 120 may also include an input device, an output device and a driver for a display device. The computers 120 within the central server system 12 are shown as being hardwired to each other and to the internet, but the respective computers or portions of the network may include either wired and/or wireless connectivity to the internet, to an intranet or an alternative networked communication system, such as, for example and without limitation, .a cloud-based system, an autonomic system, a client–server based system, a grid based system, a mainframe based system, a utility based system, a peer-to-peer based system, a cloud gaming based system, or any other suitable types of system architectures, topographies or configurations.

[0021] In addition to the respective computers 120, the central server system as depicted in FIG. 2 includes one or more, and in this example, two network switches 122 and two firewall devices 124. The network switches 122 may for example be Hewlett Packard model 2510-48G Switches and the firewall devices 124 may be Cisco Model ASA 5520 firewalls and associated software. As illustrated, the firewall devices 124 are interconnected to each other and to the internet, and each firewall device 124 is also connected to one of the network switches 122.

[0022] The network switches 122 are connected to the respective computers 120, which as shown may be divided into logical functions to control certain aspects of the operation of the wagering system which may be best understood in connection with the block diagram of the functional architecture of the program for the wagering system illustrated in Fig. 3. In FIG. 2, there may be provided a redundancy for the respective computers 120 such that as shown there are two computers 120 for each of the tasks, and the redundant computers 120 are interconnected.

DraftKings, Ex. 1002, p. 213

[0023] As illustrated in FIG. 2, there are five pairs of computers depicted interconnected through a bus, and through the bus to switches 122. The five pairs include computers 120A, associated with the web interface and connectivity, computers 120B associated with the Mid-Tier program, computers 120C for a database, computers 120C for a Tote program and computers 120E providing the management interface for the central server system, all as described in more detail below in connection with Fig. 3. The computers 120E are shown including a workstation 126 including an input device such as a keyboard and an output or display device such as a monitor. Also, the respective computers need not be located in the same facility, thus for example the computers 120D providing the Tote functionality may be remote from the computers 120B providing the Mid-Tier functionality.

[0024] The central server system 12 of FIGS. 1 and 2 may include software programs for wagering software functionality such as registration, deposit taking, withdrawals, account sections that may include current and previous bet histories, fixtures, results, historical data, rules and regulations. These types of software programs having these functionalities are in place in various totalizer facilities and are thus known in the art. However, FIG. 3 is provided to further illustrate the process steps of the program and operation of the central server system 12 associated with the pool wagering system contemplated by the present disclosure. The program for the known functionality of a totalizer facility noted above would be incorporated in the Micro Tote 408 program, as discussed further below.

[0025] FIG. 3 represents an exemplary functional architecture of a program hosted or supported by the central server system 12. The core program is represented by the center block identified as the "Mid Tier" program 402. The Mid Tier program 402 interacts with the respective customer and website administrator input programs in the left side block identified as the Website program 404, as well as the accounting programs in the right side block identified as the Micro Tote program 408. The Mid Tier program 402 communicates using an "Application Program Interface" hereinafter "API," allowing bi-directional communication to, and through, the Mid Tier program 402, as represented by the Merchant API 406 as between the Website program 404 and the Mid Tier program 402, and the Tote API 410 as between the Micro Tote program 408 and the Mid Tier program 402, reference lines.

[0026] The Mid Tier program 402, as shown in FIG 3, may include a Merchant API 420 program, a Cash-in 422 program and an Administration 424 program. It is contemplated that the

DraftKings, Ex. 1002, p. 214

Mid Tier program 402 may be itself a dedicated stand-alone server system and program for hosting the pool based wagering system of the present disclosure, or the subroutines unique to the pool based wagering system of the present disclosure may be added to a server system and program that also hosts other types of wagering pools.

[0027] As depicted in the Merchant API 420 program box, there may be several HTTP POST request sub-routines including a Place Bet POST 430, Ticket Enquiry POST 432, Available offers POST 434, Accept Offer POST 436, Decline Offer POST 438. The Place Bet POST 430 routine is used to place a bet on the Operator system. The Ticket Enquiry POST 432 routine is used to confirm that a ticket has been sold on the Operator system. The Available offers POST 434 routine is used to determine what bet trading offers are currently available to the customer. The Accept Offer POST 436 routine is used to accept an offer. The Decline Offer POST 438 routine is used to decline an offer.

[0028] As depicted in the Merchant API 420 program box, the system may generate several file updates including a Competition Summary FILE 440, a Competition Detail FILE 442, a Pool Change FILE 444, a Fixture Change FILE 446, a Competition Change FILE 448 and a Ticket Payouts FILE 450. The Competition Summary FILE 440 routine holds a summary list of the available competitions It is updated when new competitions are added, old ones are deleted, or when the status or current fixture changes. The Competition Detail FILE 442 routine holds details about the competition. The Pool Change FILE 444 routine holds details on pool-level information changes on a competition. The Fixture Change FILE 446 routine holds details when fixture-level changes on a competition. The Competition Change FILE 448 routine holds details when competition-level information changes. The Ticket Payouts FILE 450 routine holds details for each pool as its status becomes official.

[0029] The Mid Tier program 402, as shown in FIG. 3, includes most critically the Cash-In 422 program, which itself may include the Offers Generation 452 routine, the Offers 454 routine and the Tickets 456 routine. The Cash-In 422 program is responsible for determining when an offer to buy-out a ticket holder will be made, and the price that will be offered. Within the Cash-In 422 program, the Offers Generation 452 routine is the trading engine that, when triggered, will generate a set of offers over all of the tickets that are still potential winners and then publish the offers and receive/process the acceptance of these offers via the Merchant API 420. The Offers

DraftKings, Ex. 1002, p. 215

454 routine stores all the offer made, accepted and declined. The Tickets 456 routine stores all the tickets for a pool and who the rightful owner is.

Further, the Mid Tier program 402, as also shown in FIG. 3, may include the Administration 424 program, which itself may include a Create Read Update Delete (CRUD) Merchants 460 routine, Trading Risk Management 462 routine, Stop Trading 464 routine, Reporting 466 routine, Probabilities 468 routine and Random Number Generator (RNG) Logic 470 routine. The Merchants 460 routine is to create, read, update and delete third party Merchant details within the Mid Tier. The Trading Risk Management 462 routine is to allow the control and monitoring of cash-in trading. The Stop Trading 464 routine is to allow cash-in trading to be stopped if required. The Reporting 466 routine is for calculating and reporting on settlement with Merchant systems. The Probabilities 468 routine is for the uploading of probabilities used in the trading calculations. The RNG Logic 470 routine is use for QuickPick bets.

[0030] Traditional quick picks generally allocate selections to people either randomly as prevalent in lotteries (where each number has equal probability of being drawn), or in-line with some estimated probabilities such as horse racing (or other event where outcomes do not have equal probability or prospects). It is intended that quick picks in the initial iterations of these games may or may not be in fact SMART PICKS, in that a quick pick will only be allocated to the client if it has a relatively realistic chance of providing the winning outcome and in a relative sense to the size of the pool (which may be fixed or variable (e.g., based on the public spend) or guarantee. For example, in the seven leg correct score game, some outcomes are less than 1million-to-one, where other outcomes are greater than 1 trillion-to-one. The smart pick will not allocate a quick pick ticket to a client unless it is within a certain multiple of the pool size, say five times. As such, when the pool is £5 million, all £1 quick picks (smart picks) will only be allocated to clients wanting a quick pick (smart pick), if they are less than 25 million-to-one. The reason for this smart pick adjustment is to ensure that smart pick players are not grossly disadvantaged by being allocated a random ticket with potentially very minimal probability of success, especially in reactions to the pool size.

[0031] In an alternate embodiment, the probability of generating a particular quick picks (smart picks) ticket may be proportional to the probability of each outcome winning in addition to the smart picks caps described above. Other implementations with respect to

DraftKings, Ex. 1002, p. 216

QuickPicks/SMART PICKS that are commercially known and not described herein may also be utilized as desired.

[0032] Now referring to the left side block of FIG. 3, the Website program 404 may be represented as including subprograms for a user interface 480 representing a dedicated website on which wagers may be entered for example by a customer using a personal computer or alternatively a wagering terminal as discussed above. Once logged into the website, the user interface 480 provides a registration and login routine 482, an account funding routine 484, a player protection routine 486 and a betting interface routine 488. The user interface 480 also provides a routine to allow interconnection with a payment provider 490, for example WORLDPAY®, providing a secure method by which payments for wagers may be submitted. The user interface 480 may also provide routines to provide a customer ledger 492, customer statements 494 and currency exchange rate calculator 496.

[0033] As an alternative to the customer using a dedicated website, it is contemplated that the users could interact with a Merchant Microsite 500, representing for example an established betting house or parlor having its own customer base and methods of collecting wagers and paying disbursements from and to players. These types of Merchant Microsites 500 would be provided with their own Merchant API 406 for communicating with the server hosting the Mid Tier 402 program. The Merchant Microsites 500 include routines for single sign on 502 to the wagering pool and a payment API 504 to assist in the respective accounting functions as between the operator of the Merchant Microsite 500 and the host of the pool wagering system hosted on the central server system 12.

[0034] As also reflected in the Website program 404, the Administrative (Admin) Console 510 routine is provided to manage the User Interface 480. The Admin Console 510 routine, operated by the website administrator, may include an Account Management 512 routine for managing customer account details, a Payment Reconciliation 514 routine for administration of customer deposits and withdrawals with a payment provider like WORLDPAY®, a Customer Relationship Management (CRM) 516 routine for managing sales, marketing and customer service interactions with customers and a Content Management System (CMS) 518 routine for the creation, editing and publishing on content on the Website 404.

[0035] Now referring to the right side block of FIG. 3, the Micro Tote 408 routine is the program equivalent to a "Totalisator" which receives, calculates and provides a display output

DraftKings, Ex. 1002, p. 217

for all bets made in a given progressive pool bet system. The Micro Tote 408 routine may thus include a Gateway 520 program, a Memory Grid 522 program, a Central Repository 524 program and an Administration 526 program. The Gateway 520 program includes a routine posting the wagering card 530, summing all of the wagering 532, providing updates 534, and calculating each potential payout 536. The Gateway 520 program also includes a routine for pooling and accumulating all of the Gateway Tickets 538, which is the master routine for each bet that has been placed and accepted in the pool.

[0036] Also within the Micro Tote 408 is a Memory Grid 522 program that includes a Pool Collations 540 routine. The Pool Collations 540 routine calculates and continuously recalculates the odds as each bet is placed and accepted, and as each event result occurs within the pool, so as to determine the odds with respect to each remaining active ticket within the pool bet. The odds and all information calculated by the Pool Collations 540 routine is routed through the Tote API 410 to the Mid-Tier 402, and specifically to the Merchant API 420, Cash-in 422 and Administration 424 routines.

[0037] Also within the Micro Tote 408 is a Central Repository 524 program that includes a Ticket History 542 routine. The Ticket History 542 routine retains a complete record of each bet placed, each respective ticket, all payouts, and all unpaid credits for all of the respective pools. The information within the Ticket History 542 routine may be maintained primarily for the benefit of regulators and/or oversight organizations and taxing agencies.

[0038] Finally, the Micro Tote 408 may also include an Administration 526 program that includes routines for Message Queue 544 which is for inter-process communications within the Micro Tote, Create Read Update Delete (CRUD) Wager Card 546 is for setting up the event information that will be wagered on, Manual Events 548 is for manually managing updates to events, CRUD Merchants 550 is for create, read, update and delete third party Merchant information on the Micro Tote, reports 552 is for settlement reports for the Micro Tote and Data Feeds 554 is for third party event feeds.

[0039] With respect to the software programs of Fig. 3, and with respect to the respective computers of Fig. 2, computers 120A drive the consumer websites 480, merchant microsites 500 and the website administration console 510, computers 120B host the main Mid-Tier program for driving the merchant API 420, cash-in 422 and mid-tier administration console 424, computers 120C host the program for physically maintaining the Customer Ledger database 492,

DraftKings, Ex. 1002, p. 218

computers 120D host the program for physically maintaining the Tote 408 that consists of Gateway 520, Memory Grid 522, Central Repository 524 and Tote administration console 526, and computers 120E host the program providing the physical management interface for the entire interrelated system software.

[0040] For the wagering and option buy-out system of the present disclosure, the central server system 12 is programmed to provide to the wager stations 14, wager terminals 16 or personal devices 18, 20, 22 or 24 various options for placing wagers on one or more (e.g. a sequence of and/or separate discrete) sporting events spread over an appropriate interval. The wager stations 14, wager terminals 16 or personal computing systems 18 would allow a player to place a wager on a series of (or separate discrete) sporting events, for example three to eight soccer matches scheduled to occur over a three day period. The player would select the winners, or in some embodiments the particular scores of the matches (or any other variables), for each particular sporting event within a defined cumulated pool or other. The player would receive either a printed ticket or an electronic ticket representing the selections and the amount of the bet. The controller or server system 12 would maintain the pool, assign tracking identifiers to each wager and ticket placed into the pool, and determine any payout requirements from the pooled wagers in the event of a successful selection of all of the events.

[0041] The wager stations 14 and wager terminals 16 may include one or more display devices controlled by the processor. The display devices may be connected to or mounted to the cabinet of the wager terminal. The embodiments as generally illustrated in FIG. 1 may include, as known in the art, a display device which displays the betting options. This display device may also display any suitable secondary information associated with the pool wagering system. The wager stations 14 and wager terminals 16 may include a credit display which displays a player's current number of credits, cash, account balance or the equivalent. In one embodiment, wager terminal includes a bet display which displays a player's amount wagered. The wager stations 14 and wager terminals 16 may include, without limitation, a monitor, a television display, a plasma display, a liquid crystal display (LCD) a display based on light emitting diodes (LED), a display based on a plurality of organic light-emitting diodes (OLEDs), a display based on polymer light-emitting diodes (PLEDs), a display based on a plurality of surface-conduction electron-emitters (SEDs), a display including a projected and/or reflected image or any other suitable electronic device or display mechanism. In one embodiment, as described in more detail below, the display

DraftKings, Ex. 1002, p. 219

device includes a touch-screen with an associated touch-screen controller. The display devices may be of any suitable size and configuration, such as a square, a rectangle or an elongated rectangle. The wager stations 14 and wager terminals 16 may be any sort of integrated products or stand alone terminals or devices, such as, for instance and without limitation, one for a casino or betting shop, such as in the nature of a fixed odds betting terminal ("FOBT") or a Best Gaming Technology ("BGT") Self service terminal, as examples. Any other suitable types of products or devices commercially known may also be utilized where desired and in accordance with the needs of a particular implementation.

[0042] The wager stations 14 and wager terminals 16 also may include at least one payment acceptor in communication with the processor. The payment acceptor may include a coin slot and/or a payment, note or bill acceptor, as examples, where the player inserts money, coins or tokens. The player can place coins in the coin slot or paper money (e.g., the coins or paper money may include actual and/or virtual currency), a ticket or voucher into the payment, note or bill acceptor. In other alternatives, devices such as readers or validators for credit cards, debit cards, credit slips or the like may accept payment. A player may insert an identification card into a card reader of the wager stations 14 and wager terminals 16. The identification card may be a smart card having a programmed microchip or a magnetic strip coded with a player's identification, credit totals (or related data) and other relevant information. A player may carry a portable device, such as a cell phone, a radio frequency identification tag or any other suitable wireless device, which communicates a player's identification, credit totals (or related data) and other relevant information to the wager stations 14 and wager terminals 16. Money may be transferred to a wager station 14 or wager terminal 16 through electronic funds transfer. When a player funds the wager station 14 or wager terminal 16, the processor determines the amount of funds entered and displays the corresponding amount on the credit display or other suitable display. As should be understood, where the term "money" or reference to some form of funds is made herein, both actual currencies and virtual currencies would equally be captured by this term.

[0043] In one embodiment, the wager stations 14 and wager terminals 16 may further be configured to: read the receipt of a purchased ticket, make a buy back offer on the ticket, accept that buy back offer, print a ticket for the cashed-in value, print another ticket, and/or adapt the first ticket so the client has a record his ticket is now partially owned by him.

DraftKings, Ex. 1002, p. 220

[0044] The wager stations 14 and wager terminals 16 may include at least one and preferably a plurality of input devices in communication with the processor. The input devices can include any suitable device which enables the player to produce an input signal which is received by the processor. After appropriate funding of the wager station 14 or wager terminal 16 the input device is a game selection device or a game play button which is used by the player to identify the selected outcome of each of the games/matches/legs of the pool wager on the wager station 14 or wager terminal 16.

[0045] As this first embodiment of a pool bet system is premised on betting of sporting events, the server has an input device 26 allowing an operator to enter the results of the sporting events, the winners of the matches or games, the final scores and/or other parameters such as the total score of the game or the point differential. It is contemplated that this information will be entered reasonably promptly following the completion, and if required certification, of the sporting event. With the results of the sporting events for a first sequence of events, the system will make a determination as to whether any individual wagers recorded in the system have correctly selected the winners (or point spread etc.) of the sporting events.

[0046] After some percentage, such as a majority, of the sporting events have occurred, the server system 12 may be configured to identify the remaining potential winning ticket or tickets for the Jackpot Pool, i.e., those tickets that have correctly selected each of the results (win or consolation) of the events of the completed legs, or remain eligible for the consolation prize for selecting a certain percentage of the actual winners (i.e., 6 of the 8 winners). Upon determining the number of remaining potential winners of the Jackpot Pool, the system will determine the likelihood of each ticket winning the Jackpot Pool (alone or shared with other players, which may be known or modeled), and on that basis make a determination as to the attributed value of the ticket based on its respective probability of winning the Jackpot Pool (and the prize if split multiple ways). The server system 12 then makes the determination of what the appropriate value would be for a ticket in order to make an offer to buy–out to one or more players (as disclosed herein, in other examples one or more other sources may also be used in addition to, or as an alternative to, the server system 12 for determining the appropriate value). In one example, the buy-out offer is for buying an entire ticket from a player (i.e., 100%) for an indicated value. As should be understood, the buy-out offer may be for any desired percentage of a ticket (i.e., any percentage between 0%-100%). The player presented with the buy-out offer may decide if it

DraftKings, Ex. 1002, p. 221

will sell the ticket at the indicated value, not sell at all and retain 100% of the ticket and/or make a counter offer (i.e., such as a different percentage amount and/or a different value, etc.), as examples. If the buy-out offer is accepted, the player will receive the indicated value (which may occur in a variety of different ways as described herein). In certain examples, when a buy-out offer is accepted, the entity that initiated the buy-out offer will in return obtain legal ownership of the ticket from the player. In certain other examples, the entity that initiated the buy-out offer will not obtain legal ownership of the ticket, but merely obtain an entitlement (e.g., a contract) to obtain all or any portion of any future Jackpots, awards or other prizes, etc. (i.e., depending on the ticket percentage related to the buy-out offer) that may occur in connection with the ticket from the point of purchase moving forward. In certain other examples, the player may also have the option to offer (i.e., counter offer) or sell something different than the original buy-out offer, such as just a portion of a ticket in response to a buy-out offer. As an example, and without limitation, depending on how a desired system is set up, the player may have the option to provide a counter offer for consideration by the entity that initiated the buy-out offer (e.g., something different than the original buy-out offer, such as a different percentage of a ticket and/or a different designated amount for the value, etc.), and with the entity being able to accept the counter offer (or alternatively where set up in this manner, to otherwise deny or provide yet another counter offer back to the player, etc.). Similarly, where desired, rather than the entity providing the acceptance, the entity may merely provide an indication to the player that is agreeable to the terms and/or provide to the player a new buy-out offer along the lines of the counter offer, which may then be accepted by the player. However, it should be understood that this is merely a matter of logistics for how acceptance is to be made to a counter offer (either by the entity or player), but both approaches will accomplish the same objectives and may be utilized where desired. In addition to, or alternatively, depending on how a system is structured, the player may have the ability to sell something different directly in response to a buy-out offer, such as a different percentage of a ticket. As an example, and without limitation, in response to a buy-out offer for 100% of a ticket, a player may sell only 50% rather than 100% of a ticket, and the amount paid to the player would then be similarly reduced, such as being reduced proportionately by 50%, or alternatively reduced less than 50% if a premium was associated with the 100% buy-out offer, or any other desired amount depending on how a system is desired to be structured. As should be understood, and without limitation, a player may offer or sell in

DraftKings, Ex. 1002, p. 222

response to a buy-out offer any different percentage of the ticket in return for a percentage of the indicated value. The percentage of the indicated value may also vary as may be desired based on the percentage of the ticket offered or sold. For example, in certain situations, partial cash-in of a ticket may be proportionate to the ticket's full value, while in other situations partial cash-in of the ticket may not be proportionate with the ticket's full value, as the operator may want to incentivize certain behaviors around cash-in, according to particular preferences of the operator. In one example, sale of 50% of a ticket may correspond to 50% of the indicated value of a ticket. In another example, a certain defined "premium" may also be allocated against the player for a sale of less than 100% ownership of a ticket; for instance, sale of 50% of a ticket may correspond to payment of only 45% of the indicated value (with the premium corresponding to 5%), although as should be understood, the amount of the premium can vary and/or may also be adjusted based on the amount of the ticket sold, as may be desired (i.e., a lower premium the greater the amount of the ticket sold and the higher the premium the lower the percentage of the ticket sold). The premium may also vary, on the value sold or the proximity to the end of the game, as examples, and it would be expected that large sums and closer to the end of the game tickets would attract the biggest premium, as users should be less price sensitive.

[0047] In yet another example, where a player sells 100% of a ticket, they would receive in return the indicated value together with a "bonus" for selling 100% ownership of the ticket, and that bonus may be set at any desired value, such as a certain percentage of the indicated value of the ticket. In yet other examples, the buy-out offer may be for buying all or a portion of a ticket from a player. In another example, a player may receive a bonus for a partial-cash in, should there be a desire to incentivize a player to sell less than 100% of a ticket. Other variations are also possible according to the preferences at issue. In various examples, the buy-out offer may be initiated from any type of entity. For example, the entity could correspond to one or more parties of any type. This may include, for example, a private party or parties working in collaboration and/or a government or quasi-governmental party, etc. For instance, and without limitation, the party or parties may be the operator(s) of the network or just user(s) of the network.

[0048] By way of example, upon presentation of the ticket to one of the wager stations 14 or wager terminals 16, the ticket will be verified and the system will present the offer to purchase the whole ticket will be displayed on the display devices, and the player will have the option to accept or reject the offer via an input to the wager station 14 or wager terminal 16. The player

DraftKings, Ex. 1002, p. 223

can also respond, or alternatively be presented with the option, to sell any fraction of a ticket he/she wishes to sell through the wager station 14 or wager terminal 16. The player may also be able to respond, or offered the option of, selling different fractions of the ticket at different stages or after respective legs of the pool event. For example the player may sell 10% after fourth leg, another 20% after the fifth leg and 30% after the sixth leg, thereby still retaining 40% of the original ticket to the conclusion of the game after the seventh leg.

[0049] As another example, if after 5 matches (or legs) of a 6 match pool there are 3 remaining tickets that have correctly identified the outcomes of the first five matches (or legs), and all having an equal chance of winning the $1 million Jackpot Pool, then the server system 12 may calculate that each ticket has an actual value of $100,000. This would be the case if each person held an outcome in isolation of the other two tickets, and then the probability of each of the three owned outcomes was 10% or a price of 10.0 in decimal terms. Upon application of a risk factor and/or margin discount, the server system 12 would establish an attributed value and then communicate an offer to purchase the respective tickets to each of the ticket holders, at a price of for example $80,000 for each ticket, representing a 20% margin for the purchaser. The offered amount would represent a substantial return on a $2 ticket, and removing significant volatility for the player, that was one step from winning $1,000,000 but also one step from winning nothing. The offer may be for 100% of the ticket, or alternatively could be for a partial portion of the ticket, for example an equal fifty percent share, at $40,000. In this option, it is contemplated that various percentage offers could be made, for example any 10% interval from 10% to 90%, at an appropriate monetary amount. Thus, the player in the above example could sell 10% of the ticket for $8,000 and retain the potential of receiving 90% of the $1,000,000 Jackpot Pool.

[0050] It is also contemplated that the server system 12 will have the ability to receive additional data via the input device 26, for example various odds on respective wagers concerning the sporting match or event, that may impact the attributed value calculated for any given ticket. That additional information could be used to calculate with greater precision the potential odds, and attributed value, of the remaining tickets after each round or leg of the pool. Thus, in the example above, if one of the remaining 3 potentially winning tickets has predicted the final score of the final soccer match as 2-1, while another has selected the final score as being 1-10, then the more likely score of 2-1 will have a higher attributed value than the ticket having

DraftKings, Ex. 1002, p. 224

selected 1-10. In that event, the ticket holder of the 2-1 score match may be offered more, as that ticket's attributed value (or expected value in mathematical probability terms) will be higher.

[0051] To further explain the example, the outcome probability factor (OPF) and the Expected Value (EV) of two respective tickets with the following score predictions may be set as:

2-1 price (OPF?)= 10.0, and

1-10 price (OPF?)= 1000 (as it is an unrealistic score but useful for this example), with

EV = 1,000,000 (POOL)/Price of outcome/number of tickets holding that outcome.

[0052] Therefore, the ticket with the score of the final leg being 2-1will have an estimated value in a $1,000,000 pool calculated as 1000000/10/1 = $100,000 while the ticket with the score of the final leg being 1-10 will have an estimated value in a $1,000,000 pool calculated as 1000000/1000/1 = $1000. Therefore the person having the ticket predicting the 2-1 outcome will be offered in the region of 100 times more for his ticket as his ticket is 100 times more likely (than the ticket with the 1-10 score) to win the $1,000,000 jackpot.

[0053] This mathematical calculation of EV for fair value can be extended to the entire range of tickets that exist and extended backwards to the tickets remaining after the very first leg if appropriate. The ticket holders could be offered "cash in" values at any time, such as from as soon as is acceptable and viable. In certain examples, it is envisaged that cash in circumstances will increase later in the game when the potential values begin to rise significantly. In addition, in certain examples, games may include a Consolation Pool and/or a Bonus Pool in addition to a jackpot. Also, in certain examples, the ticket cash-in or buy back may include the purchase of the rights to other pools. As merely an example and without limitation, in games where there is a Consolation Pool and/or a Bonus Pool in addition to the jackpot, the ticket cash-in or buy back may include the purchase of the rights to the other pools, and the price offered will include the EV/FV/theoretical value of the bonus ticket (and any potential dividends from the Consolation Pool) given the live tickets remaining. As should be understood, in other examples, the ticket cash-in or buy back may still include the purchase of the rights to other pools even where no Consolation Pool and/or a Bonus Pool is provided.

[0054] As another option in the system, the buy-back or cash-in offer may be staged as an iterative bidding process. Thus, even after a first offer is made and rejected, the operator may elect to make another higher offer upon a subsequent presentation of a ticket. However, the

DraftKings, Ex. 1002, p. 225

holder of the ticket will not necessarily be given a second offer once the first offer is rejected so that the ticket holder will be unaware of whether a greater offer will follow or if they will be locked into the "hold" position until the conclusion of the next match or leg of the game.

[0055] An output device such as televisions 24 may also be coupled with the central server system 12 computers 120 and configured, for example, to display the pool of betting combinations and a representation of the tickets or wagers that are active in the system resulting from the bettor-selected game predictions and the results of the respective games or events that have been completed which form part or all of the pool events. Such an output device 24 may also include, for example, a visual display and/or a printing device. Additionally, such an output device 24 may be configured to display the results of an event taking place at a remote venue, such as the event forming the next leg of the pool. Thus, a betting parlor may have a series of televisions and monitors broadcasting the event (i.e., a soccer match), while also displaying streaming data concerning for example the number of tickets that remain in the pool, alerts when a goal is scored that eliminates tickets from the pool, and potentially the offers to buy outstanding tickets.

[0056] The wagering stations 14A and wager terminals 16A may be located at a first venue, while other wagering stations 14B-14N and wager terminals 16B – 16N may be located at other remotely located venues. Thus, the network formed of the plurality of wagering stations 14A-14N and wager terminals 16A – 16N may enable wagering on, and monitoring of, events at multiple venues substantially simultaneously if so desired. Accordingly, it is contemplated that the operator could have wagering stations 14A-14N and/or wager terminals 16A – 16N in multiple locations within a city, or multiple locations within a state, country or region, so as to allow pooling of bets in the game across a significant population to drive the amounts of the Jackpot Pool to substantial values for each individual game, series of events/matches.

[0057] In another embodiment, the wagering stations 14A-14N may be located in a single venue such as a race track where, for example, a first wagering station 14A acts as a server for all of the other wagering stations 14B-14N networked to it for conducting the pool wagering activity, with wagering stations 14B-14N acting as terminals coupled with the server of first wagering station 14A.

[0058] It may be appreciated that the wagering activity and buy-out option according to the present disclosure may be effected in a specific environment at a specific location on a stand-

DraftKings, Ex. 1002, p. 226

alone (or closed) system or may be electronically linked to include play in a plurality of environments or at a plurality of locations. For example, the wagering stations 14A-14N and wager terminals 16A – 16N may be distributed throughout a variety of wagering venues including race tracks, off-track betting facilities, retail establishments (where legal), casinos, lotteries, and on the Internet. Further, such wagering activity and evaluation thereof may provide automatic and immediate performance feedback (individual and team performance, leader boards or other indicia of participant standings, contest time remaining, account balances, etc.) to participants via text messaging, cellular telephones, PDAs, interactive television, email, Internet browsers or other applications. Here again, the wide distribution of available outlets and devices for entering into the game is intended to allow pooling of bets in the game across a significant population to drive the amounts of the Jackpot Pool to substantial values for each individual game, series of events/matches.

[0059] In a sports or event based wagering environment, the product concept can be applied to a number of different sports and markets. For convenience, the first implementation of the product will be described with respect to a series of soccer correct score and "Home/Draw/Away ("H/D/A") markets pooled and bet on a weekly basis. The system operator will select multiple game (three, four, five, six or seven or more games) that will occur over the following days or a weekend. For example, the system operator may select three games on a Saturday, two games on a Sunday and the final one or two games on a Monday. Players will be challenged to select the correct score for each of the games. To win the Jackpot Pool, the player must select the correct score of each of the six or seven games. The cash in function described herein may be applied even on low leg games such as a pick 3.

[0060] Accordingly, the system operator may offer several different multi-leg outcomes. For an exemplary description, a version of the pool wagering system will be described using a six leg correct score game run over six soccer matches. However, it should be readily apparent that the pool wagering system may be adapted to a PICK-n correct score model. In this example, it is assumed that the most likely result in any soccer match will have a high score of three for either team, as shown in FIG. 4 which shows the total goal expectancy over six years for six premier leagues and the world cup. In the six leg pool wagering system, each leg may consist of seventeen outcomes, these being 1-0, 2-0, 2-1, 3-0, 3-2, 3-2 and "AOH" (any other home win) then 0-0, 1-1, and "AOD" (any other draw) and the reciprocal away results, to allow each leg to

DraftKings, Ex. 1002, p. 227

consist of 17 outcomes. The inclusion of terminal group scores "AOH, AOD, AOA ensure better user experience and manageable number of probable selections. Such group could easily be extended to point spreads in games like basketball or any others, where the selections might be minus 25 points (-25), minus 24 points (-24), minus 20 points (-20)...plus 20 points.(+20), plus 24 points (+24), plus 25 points (+25), etc.

[0061] It should be understood that the foregoing is exemplary and the potential outcomes can be varied and may not be consistent over various leagues where the number of goals scored may be higher on average. The alternative anticipated scores for such a league may only influence the distribution, but not the applicability of the game, which will have a set of probabilities for each respective outcome that may be league dependent.

[0062] It is contemplated that the operator may provide that the minimum amount of the "Jackpot Pool" is guaranteed at a set level, and most of the other bets offered could be guaranteed to insure first day retail popularity. Those players who correctly select scores and winners of each leg will share the maximum of either the guarantee, or the stakes of all the others (less any applicable deductions) and also gain entry into a bonus pool. The Bonus Pool may be won or shared by any individuals that successfully choose one or more correct score(s) the following week, or a nominated time or similar

[0063] A Consolation Pool may be shared by those who select all the correct outcomes (H/D/A) or another subset of the correct score game, or on other variations based on, for example, any five of six or six of seven. The player in this example will not need to nominate H/D/A but his correct score prediction 'Home 2-0' will naturally be allocated to a "Home" outcome in the H/D/A determination of the Consolation Pool. As such on a correct score pick 7, 7 correct H/D/A results in-line with a player's CS selections will mean the player "wins" the consolation prize. In racing terms, the consolation will frequently be based on the horse, dog, race car driver,etc. placing as opposed to winning.

[0064] As each match is played – and each goal is scored – player bets represented by their respective tickets will gradually be eliminated from the remaining tickets that can still win the Jackpot Pool. Those that remain will be able to anticipate that the value of their tickets increases as they see the results of each game. The central server system 12 may be configured to allow the display of the tickets that remain active for the Jackpot Pool on each of the wagering terminals or alternatively a display board at distributed wagering locations as commonly provided in present

DraftKings, Ex. 1002, p. 228

establishments for example to display soccer matches, racing events and available wagering events and odds. While the flagship of the pool play will be the Jackpot Pool for correctly selecting the six or seven correct scores, other games such a pick three could also be offered to be completed within a single day or short time period.

[0065] Between legs, and preferably after several of the games or matches have been completed, but potentially also during the course of an event for example at the half-time of a match or event, players with "live" tickets may be offered the option of selling all or a portion of their tickets back to the system operator (or alternatively, directly or indirectly through the system operator, or directly to, any designated third party, such as, without limitation, one or more third party operator(s), business entity or entities such as a merchant(s), one or more other persons, etc.) or to retain their tickets and see whether their correct score predictions will unfold for the remaining games. As should be understood, any reference to system operator herein should be construed to apply equally to any third party as an alternative, even if not specifically mentioned. The buy-out option will preferably be communicated through the wagering station 14, wagering terminal 16, or internet connected computing devices 18 -24 from which the respective wager was placed and ticket purchased. However, as the wagering stations 14 wagering terminals 16 may not be accessible to the player, it is further contemplated that at the point in time that the player places a wager in the pool play of the present disclosure they will provide contact information to allow communication with their computing system 18 that is linked on the central server system 12 to the particular ticket. Thus, the central server system 12 will be able to send a message to the ticket holder's computing system 18, smart phone 20, or tablet computer 22, providing details of the buy-out offer. If the ticket holder decides to cash in the ticket in response to the offer, the ticket holder may communicate the acceptance via the computing system 18, smart phone 20, or tablet computer 22, to the central server system 12. Alternatively, the ticket holder would present the ticket to one of the wagering stations 14 or wagering terminals 16 which in turn communicate the acceptance to the central server system 12, and upon verification, provide the ticket bearer with a payout in the form of cash, a voucher or check. If necessary or appropriate in the respective jurisdiction, the amount of the payout may be reduced in an amount required to be withheld for tax purposes.

[0066] It is anticipated that for the pool wagering system with the buy-back option of the present disclosure that there will be an initial guarantee by the operator of the Jackpot Pool in an

DraftKings, Ex. 1002, p. 229

amount sufficient to create initial interest, for example $1 million. Thereby, Jackpot Pool winners will always be guaranteed to win all or a share of a Jackpot Pool equal or in excess of $1 million. In a first embodiment of the system and product, with respect to each ticket purchased the split following the takeout (e.g., set at 25%) may be as follows: 75% to fund the Jackpot Pool, 15% to fund the Bonus Pool, and 10% to fund the Consolation Pool(s). Other splits may be desirable and are expressly contemplated. Therefore if $250,000 (i.e. 125,000 x $2 per ticket) was bet into the pool in the first week, the Jackpot Pool would stand at $140,625 (i.e. $250,000 x 0.75 x 0.75 = $140,625), but any winners would share in the $1 million guaranteed Jackpot Pool. Any winners of the Consolation Pool (i.e. those selecting five out of six of the correct scores accurately) will split a share of $25,000 between them less deductions (i.e. $25,000 x 0.75). The following week, winners would get the opportunity to select a correct score (for each successful ticket) from a featured match to be in with a chance of winning the Bonus Pool. Anyone who correctly predicts that correct score would therefore net a share of the Bonus Pool.

[0067] Should the Jackpot Pool and Bonus Pool not be won for a few weeks, then those pools may build up to very significant amounts. For example, if players bet a total of $3,000,000 into the Jackpot Pool (over a period) but fail to win the main Jackpot Pool prize, then a total win/jackpot payout of $2,250,000 will have built up and any winners the following week Jackpot Pool winners will get a share of that amount plus a share of the amounts staked in that week. Therefore, if another $3,000,000 is bet into the Jackpot Pool then the potential winnings will stand at $4,500,000. Should three people win the game, then they will split $4,500,000, giving them $1,500,000 winnings each (less their price of purchase and/or deductions other than the takeout, if applicable). The Consolation Pool will have been won previously – in all likelihood – and will for example stand at about $300,000 from the current week's stakes. If 30 players select five out of six correct scores that week, then they will win $7,500 each. The Bonus Pool will not have been won (yet) and will stand at $900,000. The three winners will have the chance to win the Bonus Pool in the next week, each getting one selection.

[0068] As the matches or games for each of the respective tickets are preferably staggered over 2, 3 or even 4 days (typically 3 days Saturday to Monday), the system operator will have the ability to communicate to the respective wagering outlets or through an online interface to offer players the ability to sell back any tickets which are still 'live' after one but preferably several of the matches as discussed above. In other circumstances, such as in tennis as an example, buy-

DraftKings, Ex. 1002, p. 230

back of tickets may be enacted intra leg (between sets or games), or in later legs. In football, for example, buy back may occur during live play.

[0069] To further illustrate, if a player has a ticket where the first three matches/ games on a Saturday were predicted correctly, he/she will have the facility to sell back to the system operator the same ticket and close out their position before Sunday's matches. The buyback value will be calculated by the server, potentially under the control of the system operator or the business partner, based on the number of match legs the ticket has already correctly predicted plus the remaining predictions for the subsequent games. When a ticket is cashed in (i.e. bought back by the system operator), the ticket and all the rights of the ticket will vest in the system operator. In addition, this buy-out facility will include a margin for the system operator, anticipated to be around 15%.

[0070] For example, if, going into the Monday night games, a player has two tickets which are still in play, and their predictions for the final two matches are 2-3 and 1-0 on one ticket and 2-2 and 1-0 on the other ticket, they will have the option to cash in either or both of their tickets. The server system under the direction and control of the system operator will calculate the estimated odds of winning the pool (and pay-out) with either ticket and will offer a buyback value to the player. The mechanism will be clearly explained to players who can opt to either exercise the opportunity to sell back their position or stay in the game until the end. While as noted above the central server system 12 may have the ability to provide information on the number of tickets that are still in play after each leg or match in the pool, it is also contemplated that the information may or may not be communicated to the respective ticket holders who receive the buy-out offer. Thus, the ticket holder may not be aware that there are only a few as opposed to dozens of still viable tickets in a given pool when the buy-out offer is communicated. If the player is given some information for transparency, it may or may not be leg by leg information, and as such he might know how many tickets remain but he cannot know if he owns the exact permutations he owns unless the game is in the final leg. It may however be beneficial to communicate with the holders of every remaining live ticket the exact number of outstanding live tickets, and the scores those tickets have allocated in each leg. The only time the disclosures may not be communicated will be during concurrent games. The information, if given leg by leg, gives 100% clarity on the potential to split the jackpot once published for the final leg. Individual permutations and their ownership level may or may not be given, but they potentially could be.

DraftKings, Ex. 1002, p. 231

[0071] It is also envisioned that cash-in buy back may also operate during live play and offer continuous cash-in ability as soon as it is technically possible, for example at the half-time of a match or during the running of a match when possible. It is also contemplated that a ticket could be purchased with two or more potential outcomes selected for the final legs or events, for example by paying twice as much the player could have one selection in each of the first five legs and then have two different selections for the sixth leg. In such an event, the system may offer to buy both outcomes, or each outcome and thereby divide the ticket as between the original player and the system operator. This type of fragmentation of the tickets could be extended to any leg of the event.

[0072] The ticket buy back process may include an interactive process that bids the ticket holder in a sequence of events for the ticket. For example, the system operator might originally offer the client $100,000 for a ticket that has 5 correct scores, if the client declines to sell the ticket, the system operator might revert to offer $105,000. At each step the ticket holder may not be aware if that is the final buy-out offer or a better buy-out offer will occur. In certain examples, there may also be only a limited number of buy-out offers made and/or capable of being accepted with respect to a particular game or games, (i.e., made to/accepted by players participating in a particular game), so the greater the number of buy-out offers declined by a player and/or longer the time period before a player accepts an outstanding buy-out offer, the greater the risk may be that no additional buy-out offers will be made to that player or an outstanding buy-out offer made to a given player may be withdrawn (i.e., once the maximum limit is reached). Furthermore, the ticket holder may have the period between the offer and the start of the next leg of the bet in which to make up their minds. Once the next leg has started, buy-out offers may be automatically withdrawn. It is further contemplated that the ability to trade or sell tickets back to the system operator may be continuous, and also in these circumstances, the bid may be extremely time sensitive. Additionally, as discussed above, the player or ticket holder may have the option to sell a fraction of their ticket to the system operator or other third party. In the first instance, this facility may be limited where desired, such as to 10% fractions. A player that sells a portion of his ticket back to the system operator may then only get paid in respect of the remaining fraction of the bet should the ticket be successful. The system operator may pay the other portion to itself (or the third party ticket purchaser) if that ticket was successful.

DraftKings, Ex. 1002, p. 232

[0073] If a player retains a portion of a ticket that is successful and thus entitles him to play a bonus game, in certain examples, the player will be allowed one selection (or other desired selection amount(s)), but will only win the fraction of the Bonus Pool that he holds in the winning ticket. In other examples, a player may be allowed to decouple a ticket, such that a player may accept a full or partial buy-out of only certain parts of a ticket (i.e., for a given Jackpot, or only certain events listed on a ticket, such as particular games) and with the remaining parts of the ticket being unaffected, so that the player retains the entirely of these remaining parts of the ticket (i.e., such as a bonus and/or consolation pool, or any other events listed on a ticket, such as remaining games). As mentioned above, when a ticket is cashed in (i.e. bought back by the system operator), the ticket and all the rights of the ticket will vest in the system operator. As such, the system operator would hold the other portion of the ticket and be entitled to select an outcome in the bonus leg and win the portion (or whole) bonus. It is contemplated that where the system operator holds a whole or part of a bonus ticket, they will need to nominate their selection earlier than the remaining players, for example, the system operator must nominate their selection 2 hours prior the start of the bonus game, and members of the public will only need to offer their selection 1 hour before. This rule would help ensure that the system operator's selection cannot be made with the prior knowledge of the public selection. As a default, any player having a valid qualifying ticket that does not make a selection in the Bonus Pool for their bonus ticket will be allocated a selection having a high probability, for example a 1-1 draw. This may be provided in the terms and conditions ("T&Cs") of the game.

[0074] In the context of a lottery game, in certain implementations any player having a valid qualifying ticket that is not present or found in time for the cash-in phase will be deemed not to sell. In the context of slot games, in certain implementations if a timer expires, the player will have been deemed not to have sold. Thus, generally speaking, if a player does not give input or is not present to make a decision as to what he/she wants to do, the game will proceed as if player does not want to sell.

[0075] In a first implementation it is anticipated that only the system operator will be able to offer the buy-out option to the active tickets holders using the central server system 12 to communicate the offers. However, it is also contemplated that the system operator may use the central server system 12 to solicit offers from third parties that would be communicated to the active ticket holder. In this embodiment, the central server system 12 could communicate the

DraftKings, Ex. 1002, p. 233

details of the outstanding active tickets through all or a select number of wagering terminals 16 and allow bids for the outstanding active tickets to be submitted via the wagering terminals 16. As another alternative embodiment, it is contemplated that the system operator could facilitate the ability of members of the public to buy and sell active tickets like in the manner of a person to person betting exchange, such as, without limitation, of the type offered by Betfair. Thus, it is also contemplated that the central server system 12 could allow the posting of available buy-back options so that the public could place buy-back offers for example though the wagering terminals 14 and the ticket holder could select the buy-back bid of his or her choosing.

[0076] With the foregoing description of the implementation, it may be appreciated that during the course of an exemplary wagering event (e.g., such as a pool, a parlay, an accumulator, etc.), the central server system 12 may go through certain of the following process steps, and in one or more rounds as may be required to complete a particular wagering event, as shown in FIG. 5, comprising:

a) receiving information on the results of the events/matches from the input device;
b) interrogating the ticket base, to count live or active tickets that have correctly predicted each game outcome to date following each outcome;
c) price the active tickets based on the number of active tickets that will hold a particular outcome;
d) price the active ticket on the probability of the selected outcome;
e) price the active ticket as against the scope of the Jackpot Pool;
f) determine an attributed price ((pool size/number of ticket that hold that outcome)* probability of that outcome – margin) and offer price for the active ticket(s);
g) communicate the offer price to the active ticket holder for all or a portion of the active ticket;
h) receive confirmation of acceptance of the offer from the active ticket holder;
i) complete the buy-out transaction;
j) receive input on the completion of the final events / legs of the pool;
k) distribute the Jackpot Pool to holders of the winning active ticket(s).

[0077] Further, the concept and system disclosed herein can be adapted for other multi-outcome wagering scenarios and may include any desired manner of wagering, including but not limited to those that accommodate accumulator or parlay wagering, as an illustration. For

DraftKings, Ex. 1002, p. 234

purposes of this disclosure, a parlay or accumulator wager comprises a single wager that links together two or more discrete events and in any combination (e.g., legs or divisible portion thereof) and is dependent on correctly selecting the outcome of the two or more discrete events. For instance, a parlay or accumulator wager as referenced herein may include a double, treble or any other type of multiple wager as may be known in the art. As one example, an accumulator or parlay may have much higher payoffs than wagers placed on individual discrete events since the difficulty of hitting it (i.e., correctly selecting all event outcomes) is much higher. If any of the discrete events in the accumulator or parlay lose (i.e., , the selected outcome is incorrect) the entire accumulator or parlay loses. In certain other examples, where the parlay or accumulator wager includes combinations of discrete events, and one or more of those combinations lose, the player may be still eligible to win some portion of a jackpot, a consolation, or some other award as may be desired. Thus, in the context of the present disclosure, an accumulator or parlay wager may be placed on a multi-leg event (either in the entirety or a designated portion or portions of legs, etc.), such that the outcome of each leg corresponding to the accumulator/parlay wager must be correctly selected for the accumulator/parlay wager to be eligible for a designated prize or award (e.g., a jackpot) or portion thereof. In certain examples, the parlay or accumulator wager may be selectable by at least one of a player, a third party, the wagering system or some other manner as may be desired. Notably, for example and without limitation, the terms wagers, wagering, bets and betting as referenced herein may include, without limitation and for illustration purposes only, single wagers, multiple wagers, full cover wagers, full cover wagers with singles, 'Any to Come' (ATC) or 'if cash' wagers, specialty wagers, forecasts, fixed, variable, guaranteed, parimutuel wagering, fixed-odds wagering, and any other variations known in the art, etc., alone and in any desired combinations. For example, multiple wagers may include a parlay or accumulator wager.

[0078] As another example, a multi-outcome wagering scenario may include slot machines. In this alternative, the system could be incorporated into any type of slot machine game, such as a progressive jackpot played for example on a slot machine 26 as depicted in FIG. 1. In this example, each reel or defined number of reels of the slot machine 26 may correspond to a different leg of a multi-outcome wagering event. As noted above, each reel may be a virtual reel (as in a video or electronic slot machine, for example) or a mechanical reel as in conventional slot machines. Further, any of the type of wager input devices described above in connection

DraftKings, Ex. 1002, p. 235

with fig. 1 may be used, or alternatively a conventional slot machine may operate as the wager input device. In addition, there may be a plurality of slot machines 26 provided for participation by multiple participants, and each of the slot machines being in communication with a server system controller. Currently, slot machine based games have an outcome which is determined almost immediately even though the machine may take a few seconds to display the results. Even in the present systems, the game is complete before a person has the chance to realize that they are getting closer and closer to the premier prize. In most examples the reels stop one by one, with only 1 second or so between each reel. However, the display of each reel stopping is primarily for effect as the outcome of the game is determined by the random number generator in the game controller shortly after the play is initiated.

[0079] The present disclosure may be implemented in various configurations for gaming machines or wager terminals known in the art, including but not limited to a dedicated gaming machine or wager terminal, wherein the computerized instructions for controlling any games (which are provided by the gaming machine or wager terminal) are provided with the gaming machine or wager terminal prior to delivery to a gaming establishment, and a changeable gaming machine or wager terminal, where the computerized instructions for controlling any games (which are provided by the gaming machine or wager terminal) are downloadable to the gaming machine or wager terminal through a data network when the gaming machine or wager terminal is in a gaming establishment. These types of gaming machines and their respective operation in both stand alone and pool or progressive games are disclosed in detail in U.S. patent no. 8,105,149, incorporated herein by reference.

[0080] By incorporating the concept of the present disclosure, the slot machine could be programmed such that once a first level of jackpot indicators appear in a winning sequence according to a first random number generation, the selection and display of the remaining indicator or indicators is paused and an offer to buy-out the player is presented. For example, a person with four "$" on the first four reels and the last reel spinning is one step from a jackpot, (e.g. $2,000,000) and if the machine has a 20/1 odds to get the last reel on a "$" then the operator could offer to buy-the spin for $100,000, or any fraction of it for the proportionate amount. If the player accepted the buyout, the machine would print a cash-out ticket for the buyout amount. The player either accepts the offer, in full or in part, or rejects the offer whereupon the random number for the remaining wheel is generated and the spin is completed. If the buyout was

DraftKings, Ex. 1002, p. 236

accepted and the final indicator selection results in a win, then the operator banks the amount of the jackpot. If the player sells only a fraction of the potential jackpot, then the player receives credits, either on the machine or in a ticket print, of the fractional remainder and the operator banks the balance.

[0081] It is anticipated that the concept will provide great drama and a limited period for it to be resolved, and allow players to trade and control their fate. From an operator standpoint, there may be a limit on the duration of the buyout offer, for example thirty seconds or one minute. This may be counted down for the player on the display, so that the player is forced to make a decision or simply allow the time to expire and the last indicator to be selected. While in theory the system could be used as soon as a single indicator is selected, it is believed that the system is more practically implemented when there are several indicators that must align before extending the final spin to provide the buyout or trade-in option. Thus, it is contemplated that the option would not be provided until the bet/selection has been 70-90% resolved or else the value of the buyout option is not sufficient to entice the player to cash-out and the progress and rate of play may be unacceptably slowed down.

[0082] The slot machine based system provides additional benefits to the house or casino in which the machine is located. First, for an in-house only progressive or pool game system, the buy-back option allows the house to bid on and potentially receive (if the bid is accepted) the accumulated jackpot pool. In addition, in the event that the jackpot pool is a progressive or pool game distributed over a number of properties, so that the jackpot pool will grow faster or in the event that a gaming machine manufacturer licenses the use of the machines across various properties, the casino hosting the game (or the gaming machine OEM) may offer the buy-out of the jackpot pool option at the termination of any spin, including the first spin and, again if the bid is accepted, the casino making the offer would receive the jackpot pool as if it were the player who had won. In this situation, the host casino would generate revenues from the game play contributed to the jackpot pool that occurred in other casinos. They can also make money by buying back at less than actual value, i.e., charging margin on the sold ticket or fraction of a ticket

[0083] In accordance with the buy-out pool option of the present disclosure, the cash out button of the gaming machine 26 may be illuminated when the first sequence of the display for example the first three of four reels align such that the player may be on track to win the Jackpot

DraftKings, Ex. 1002, p. 237

Pool. In that event, the central server system 12 or the wager terminal itself causes the display to present a buy-out offer to the player. If the player elects to cash-out, the player may push the cash out button and cash out to receive a cash payment or other suitable form of payment corresponding to the offer presented on the display, whereupon the remaining random selection is made to determine if the Jackpot Pool is won.

[0084] In one embodiment, the player may be offered the option of cashing out a percentage of the potential Jackpot Pool, for example by depressing the cash out button the players sells 10% or 25% of the potential Jackpot Pool for the amount offered on the display. If the player for example sells 50% of the Jackpot Pool opportunity for $50,000, the player will be issued a credit for the $50,000 and then the remaining wheel spin or leg is completed. If the result is a win of the Jackpot Pool, then the player will receive credits for 50% of the Jackpot Pool, while the operator or house retains the remainder.

[0085] When the player decides to end the game play, he can select the cash out button at which time the player may receive cash or other payout mechanisms such as tickets or credit slips redeemable by a cashier (or other suitable redemption system) or funding to the player's electronically recordable identification card or the player's online account.

[0086] It is further contemplated that the jackpot buyout option and the concept and system disclosed herein can be adapted for a variety of other 'multi leg,' multi-outcome wagering scenarios, such as, for example, keno, poker, racing, video games (including live and online video games, as examples) and lotteries, including but not limited to private, public, state, national, international, social (e.g., health care or social lottery types) or any other type of lottery systems, etc. For example, in a lottery system, after the periodic ticket purchase interval, the lottery operator may draw a defined number of items, such as numbered balls. As should be understood any indicators other than numbers may also be utilized where desired, such as symbols, colors, pictures, etc. In addition, the game may comprise items other than randomly drawn balls where desired, or pre-printed numbered tickets, that then may be selected by balls or random numbers or other process. Any of the type of wager input devices described above in connection with Fig. 1 may be used, or alternatively a conventional lottery machine may be utilized for input of player handpicked numbers, for providing electronically generated numbers, such as quick pick or smart pick numbers, and providing a record of the lottery numbers for the player, such as by printing of a ticket. In addition, a plurality of wager input devices or lottery

DraftKings, Ex. 1002, p. 238

machines may be utilized and each in communication with a server system controller. The total amount of numbered balls making up the lottery system may be any desired number.

[0087] In addition, the lottery system may be comprised of different legs by having one or more balls drawn at any given time that make up each leg. In this example, each of the balls may be selected in any desired manner, such as being hand selected from a container or selected via conventional lottery machines, such as gravity pick machines, air mix machines, or via computerized random number generators, as examples. The lottery system could also be set up in any desired manner for how players may win. For example, it could be an all or nothing arrangement where a player must win all legs to win a final Jackpot, or win a defined number of legs to win one or more interim Jackpots before all legs are completed, etc.

[0088] In addition, a buy-out offer (or partial buy-out offer) may be made at any time after a ticket is obtained until completion of the event, including (without limitation) after a predetermined number of numbers have been drawn, to a player and the player may sell all or a portion of their ticket. The buy-out offer may also come from a single party or multiple parties; for instance, multiple parties operating in collaboration or multiple parties that may not be operating in collaboration (for example, where the lottery system may "bring" certain parties together for purposes of accumulating adequate resources for purposes of a buy-out offer being made). In certain examples, the party or parties buying all or part of the ticket in response to an accepted buy-out offer will obtain legal ownership of the ticket (100% ownership or a fractional ownership share where only a part is sold, i.e., where both the buyer and seller will end up with part ownership), and will be entitled to win at least a portion of any future Jackpots or other prizes that may occur from the point of purchase moving forward (or even share in the proceeds of prior Jackpots or prizes if set up in that manner). In certain other examples, the party or parties buying all or part of the ticket in response to an accepted buy-out offer will not obtain legal ownership of the ticket, but merely obtain an entitlement (e.g., a contract) to win at least a portion or all of any future Jackpots or other prizes that may occur from the point of purchase moving forward.

[0089] As should be understood, wherever the term "party" is used throughout this disclosure it should be broadly construed to comprise a single entity or plurality of entities. Also, its should be understood that both the player or ticket owner as well as the party making the buy-out offer may be comprised of a single entity or a plurality of entities.

DraftKings, Ex. 1002, p. 239

[0090] The value or price of the buy-out offer and/or ticket sold may be variable as may be desired. For instance, the value or price of the buy-out offer can be set by various sources, and be based on any objective and/or subjective standards, such as an auction, a calculated probability (e.g., of winning one or more legs of a multi-outcome wagering event), random-number-generated probabilities, a lottery system similar to server system 12 discussed above, a party or parties initiating the buy-out offer, an independent third party/parties or resource(s), such as the system operator, the seller of the ticket, and/or it may be the byproduct of negotiations or a barter between the buyer and seller to arrive at an acceptable price, etc. In addition, the value or price can also be affected by the number of parties receiving a buy-out offer; for example, an amount X where there is one party and X divided by 3 where there are 3 parties, etc. As for timing, the buy-out offer could be made prior to any legs occurring or at any time prior to completion of the event, such as between any of the defined number of legs, and may be made just to winners or to any other parties, such as partial winners or to players who have not won at all, but who still have an active ticket, such as before any legs have been completed or a ticket that has separate divisions, etc. In addition, the value or price relating to a particular buy-out offer (or ticket sold) may be represented, conveyed or otherwise characterized in any desired manner, such as, and without limitation, as a jackpot or portion thereof (e.g., as at least a portion of at least one jackpot; for example, a designated jackpot that may be smaller (i.e. in value and/or price) than a larger jackpot that may be available to a winner/winners of a multi-outcome wagering event and set by any of the various sources above), as a prize, a payment, an award (e.g. monetary and/or nonmonetary awards, such as those described above), or any other suitable manner. Separate and apart from buy-out offers, tickets may be exchanged or transferred from one player to another or to any other party or entity type and at any desired time, and with legal ownership also being transferred at the same time. In some circumstances there may be merely an exchange of tickets and no other value or payment made from one party to another. In other circumstances there may be a value or payment made from one party to another, which can comprise anything the parties may agree to, such as some form of monetary payment or credit, or some other form of "value", such as, without limitation, any goods or services or incentives, etc.

[0091] In one example of a lottery system, the first x number of balls would be drawn at one or more predetermined times, such as from one "barrel", which would correspond to one or more legs, and after a delay of a certain interval, such as one week, the last leg or bonus ball would be

DraftKings, Ex. 1002, p. 240

drawn. For instance, 5 balls would be drawn on a weekend day and make up the first leg, although any other day may be utilized as well, or even a shorter or longer interval, such as within minutes or hours, or a desired number of days, weeks, months or years. Also, as should be understood, the number of balls drawn making up the first leg may vary as well, such as fewer or more numbered balls. A determination would then be made as to the number of tickets having the correct numbers. This may be accomplished electronically via the server system controller. In certain examples, the determination may involve identifying tickets having all 5 numbers correct. However, in other examples, the determination may involve identifying those tickets that have some designated number of balls correct less than 5, such as 4 out of 5, or 3 out of 5, or 2 out of 5 or 1 out of 5, etc. In addition, in certain examples the particular order or sequence of numbers on a ticket are required to correspond to the order of the balls drawn to be considered correct. In certain other examples, the order or sequence of numbers on a ticket do not need to correspond to the order of the balls drawn; so long as the ticket contains the requisite number of balls that were drawn somewhere on the ticket (irrespective of the order drawn). Any number of the holders of tickets having the correct numbers may be provided with a buy-out offer, conducted as a fixed price offer (that may not be consistent to each player, if some players hold the same terminal number as others and as such are only eligible to share the jackpot), or as part of an auction system where a limited number of "buy outs" may be offered, as examples, followed by a drawing or drawings to determine the winners from the remaining ticket holders that did not accept the buyout offer. In addition, with respect to those examples where a ticket having less than all balls correct would qualify, the particular buy-out offer may be relevant to the number of balls that are correct, for example, a larger buyout offer the more correct numbers on a ticket, and/or entitlement to a larger or better prize or a bonus the more correct numbers on a ticket, etc. Alternatively, any of the players having winning tickets (or those having a certain amount of correct numbers) may qualify for a supplemental lottery drawing, which could be the final leg(s) of the lottery or a bonus round, as examples. For instance, the qualified players may select or obtain one or more additional number or numbers on a new ticket for purposes of the supplemental drawing. For example, the supplemental drawing could be in the form of a bonus ball, and the winner or winners matching the bonus ball would win or share in the Jackpot or a bonus Jackpot.

DraftKings, Ex. 1002, p. 241

[0092] For instance, in this example, each of the holders of tickets having the correct numbers (or any other desired number of ticket holders) may be offered to attend the draw of the remaining number or numbers in an organized event, such as via a live event attended by all holders in person at a defined location, or attended by a communications medium from an offsite location, such via a video conference or web interface, such as Skype or ooVoo, as examples (perhaps the following week or other desired time). In addition, the live event could be made accessible for viewing by the public, such as an in person audience, or more generally viewed over any mass communications medium, such as broadcast over television, cable, satellite, the internet, radio, mobile communication device (e.g., mobile phones, tablets, computers, PDA (personal digital assistant), etc.), social media or any other desired medium. As an example, the lottery system may be set as a reality show that is viewed live or pre-recorded and broadcast over television or other medium to the viewing public. In addition, in this example, before the remaining number(s) are selected, the lottery operator may provide remaining ticket holders with a buyout option, available to a limited number of players or all of them on occasion. Further, in this illustration, a bidding process may be included as an option, which would have the effect to add drama to the conclusion of the game. For instance, the buyout bid could potentially be provided to all the people at the same amount for their ticket and let them rush to accept, and with the bidding process closed once a certain percentage have "sold" their ticket in response to the buyout offer, and then the last ball or balls would be drawn. As an alternative, for example to maximize interest and tension for television purposes, the bonus ball (or last leg or alternatively any other leg) may be determined by a multi-step process of elimination, resulting in one or more remaining numbered balls that are then used to compare against the players tickets to determine if there are any winners (i.e., removing one or more balls in each leg, and including a plurality of legs so that more and more balls are removed over time, until just a certain number of balls remain, such as one ball), rather than a process of selecting one or more balls in one action that are used to compare against the players tickets, but either process may be used as desired. Additionally it may be possible that between each elimination process or leg (or fewer than each but between specified legs) the individuals still eligible for a prize may or may not be offered an additional chance to "cash in their ticket" with a subsequent buy-out offer or offers, and the buy-out offers may also be increasing in value as their probability of winning increases as the event proceeds toward the last leg or bonus ball. Alternatively, the buyout offer could be provided to

DraftKings, Ex. 1002, p. 242

less than all players, at different times, at different amounts, and/or having a defined period of time for players to accept the buyout bid. It should be understood that the multi-step process of elimination may be used in any manner in connection with a lottery system, such as, including for either or both of any initial lottery drawings or any bonus drawings.

[0093] Further, the percentage of players required in order to trigger the close of the bidding process may be established at any desired value, for instance, ranging all the way up to 100% of the players that have accepted the buyout offer. The lottery operator may assume the ownership of the ticket from the players that have accepted the buyout offer. Any winners after the final number(s) are drawn would receive or share in the jackpot. If there is no winner, in one implementation the jackpot may be rolled into another game or event. Alternatively, players may also be allowed to sell a fraction of their tickets in response to a buy-out offer, to ensure the game is not 100% binary as an option, and with the proportion being any desired amount, such as being subject to commercial considerations of drama, and interaction of players.

[0094] It should be understood that various changes and modifications to the presently preferred embodiments and examples described herein will be apparent to those skilled in the art. For instance, each of the features and aspects described in connection with any of the various presently preferred embodiments and examples can also be used in connection with any or all of the other of the presently preferred embodiments and examples alone or in combination, even though not explicitly described therein. Further it should be understood that all of the features and aspects described herein may be provided through use of any suitable hardware, software or combination of both, as may be desired and in any manner. In addition, for example, the gaming system disclosed herein may provide the awards to winning players in any suitable manner, such as through a suitable bonus or secondary game or event determined by the implementer or operator of the gaming system, and may include, without limitation:

[0095] 1) Dividing any multi (betting/dealing/trading) outcome into its sub components.

[0096] 2) Allow change of ticket ownership or ticket exchange between players or other entities at any time, including at any point after a ticket is obtained or an event is initiated up through completion of the event, after each stage of the game being resolved, or at any other desired time. The recipient of the ticket that has changed ownership or been exchanged would assume the same position as the original owner; in effect stepping into the shoes of the original owner, and legally supersede the original owner with all rights associated with the ticket. For

DraftKings, Ex. 1002, p. 243

example, a change of ticket ownership can occur via a buy-out, and the party acquiring the ticket would have all the rights as the original owner, including being entitled to win any award or jackpot that may relate to the ticket in connection with any wagering event. In other examples, legal ownership of the ticket would remain with a player, but the entitlement to any award or jackpot is what would reside with another party where a "ticket change" has occurred, such as through a buy-out, or trading or giving a ticket to another player, etc.

[0097] Similarly, a party purchasing a partial buy-out of a ticket (i.e., less than 100% of the rights associated with the ticket) would be entitled to win any award or jackpot for which the ticket is redeemable in proportion to the interest purchased via the partial buy-out. Thus, if the party purchased a 30% interest in the ticket, the party would be entitled to 30% of the winnings for which the ticket is redeemable. As with full buy-outs, partial buy-outs can occur prior to or at any stage of a wagering event.

[0098] In an illustrative example of a ticket exchange, a pool may be "seeded" (i.e. a operator may place £3000 worth of bets into the pool) 4-5-6 hours in advance of a particular wagering event. As the public play into a pool becomes significant, rather than continuing to grow the pool (i.e., continuing to add money from bets) and have the operator's commitment to keep the prices inline escalate, the operator can transfer some of the existing seed money or investment to a player buying a tote ticket. Notably, the tote ticket may change ownership in whole or in part, before the pool is closed, or after the pool has closed but before completion of the wagering event.

[0099] 3) Calculate the odds specifically, allow market forces to determine a sale price, use other particular subjective and/or objective factors, and/or use any desired combination of the foregoing.

[0100] 4) Allow the ownership of remaining tickets or number to be transparently displayed to the player and or audience, to help cash in or buy-back offers or process.

[0101] 5) Transact, with or without a bidding process or joint bidding process, or auction the ticket exchange. The implementer or operator of the gaming system disclosed herein may also designate the number of awards, the time at which those awards are provided to each winning player, the number of rounds in the bonus event, the number of designated outcomes in each round and/or the number of available outcomes in each round to suitable values.

DraftKings, Ex. 1002, p. 244

[0102] Such changes and modifications can be made without departing from the spirit and scope of the present disclosure and without diminishing its intended advantages. For example, any of the concepts and features described in connection with any example, embodiment or variation herein may also apply and be utilized in connection with any other example, embodiment or variation described herein alone or in combination. In addition, any of the concepts and features disclosed herein may be provided by appropriate hardware, software and/or combination of both hardware and software where desired and deemed appropriate. It is therefore intended that such changes and modifications be covered by the appended claims.

DraftKings, Ex. 1002, p. 245

CLAIMS

1. A method of conducting a wagering event for one or more players, wherein a player is presented with at least one of a buy-out offer and a partial buy-out offer prior to completion of the wagering event, the method comprising the steps of:

providing one or more wagering input devices in communication with a system controller through which one or more players may participate in a wagering event, said system controller being adapted for:

initiating the wagering event for one or more players;

receiving a wager via the one or more wagering input devices in response to a player desiring to participate in the wagering event;

identifying one or more players eligible to win from among players participating in the wagering event;

initiating at least one of a buy-out offer and partial buy-out offer to any number of the one or more players that are eligible to win, said buy-out offer or partial buy-out offer being initiated at any time before the wagering event has been completed;

identifying any acceptances of said at least one of a buy-out offer and partial buy-out offer that have been initiated;

completing the wagering event; and

determining if any of the players have won.

2. The method of claim 1, wherein the one or more players are eligible to win an award comprising one or more selected from the group consisting of monetary awards, nonmonetary awards, a prize, a payment, a designated currency, virtual currency, tokens, credits, coupons, services, personal property, real property, virtual property, assets, investments, negotiable instruments, commodities, food, lodging, entertainment, alleviation of obligations, gaming opportunities and wager enhancement.

3. The method of claim 1, wherein identifying any acceptances of said at least one of a buy-out offer and partial buy-out offer further comprises that each of the players accepting the buy-out offer will no longer be eligible to at least exclusively win an award, wherein each of the players not accepting the buy-out offer will remain eligible to win an award, and wherein each of

DraftKings, Ex. 1002, p. 246

the players accepting a partial buy-out offer remains eligible to win at least a portion of an award.

4. The method of claim 1, wherein each the wagering event comprises one or more selected from the group consisting of sporting events, lotteries, real games and virtual games, and wherein the wager comprises a potential outcome.

5. The method of claim 4, wherein the wager is one or more of selectable by being handpicked by the player, provided electronically on request of the player through communication between the one or more wagering input devices and the system controller, provided via a random number generator associated with the system controller, a quick pick or a smart pick.

6. The method of claim 4, wherein the games comprise one or more selected from the group consisting of slot machines, keno, poker, video games and racing.

7. The method of claim 1, wherein accepting a partial buy-out offer comprises a player accepting less than the buy-out offer amount, said acceptance resulting in the player remaining eligible to win at least a portion of at least one award.

8. The method of claim 1, wherein the buy-out offer is initiated on behalf of at least one of a third party and a player, and when a buy-out offer is accepted, the third party becomes eligible for winning at least a portion of an award.

9. The method of claim 1, wherein the system controller is further programmed to provide an award, or any fractional portion thereof, upon the completion of the wagering event.

10. The method of claim 1, wherein the multi-outcome wagering event comprises one or more virtual games, said method further comprising:

initiating the buy-out offer prior to completion of the one or more virtual games, but after an outcome of the one or more virtual games has been determined,

DraftKings, Ex. 1002, p. 247

said buy-out offer including a price that is at least partially based on random-number-generated probabilities.

11. The method of claim 1, further comprising initiating a bidding process among a designated number of players interested in accepting at least one of a buy-out offer and partial buy-out offer, and closing the bidding process after a certain span of time or after a certain number of the buy-out and partial buy-out offers have been accepted.

12. The method of claim 1, wherein one or more interim awards are awarded prior to completion of the wagering event.

13. The method of claim 1, further comprising awarding at least one consolation award where a consolation scenario is won, and wherein said consolation scenario comprises finishing within a predetermined position of a corresponding winner.

14. The method of claim 13, wherein there is a span of time before the wagering event is completed, and the wagering event is completed in a live or pre-recorded event attended by the players eligible to win an award, a portion thereof, or a bonus prize.

15. The method of claim 14, further comprising initiating a buy-back offer, prior to the wagering event being completed, to at least one player eligible to win the award, the portion thereof, or the bonus, said buy-back offer being for a portion of an entirety of said award, said portion thereof, or said bonus prize.

16. The method of claim 14, wherein the live or pre-recorded event is a reality show that is broadcast over a mass communications medium.

17. The method of claim 16, wherein the mass communications medium comprises at least one of television, satellite, cable, the Internet, mobile communication device, social media and radio.

DraftKings, Ex. 1002, p. 248

18. The method of claim 1, wherein the one or more wagering input devices are adapted for generating a wager for a player reflecting one or more predicted outcomes of the wagering event.

19. The method of claim 1, wherein ownership or partial ownership of the wager may be changed from player to player at any time before or during the course of the wagering event; and wherein the system controller is further adapted for identifying the ownership status of the wager.

20. The method of claim 1, wherein the wager further comprises a list that is at least one of printed on a ticket, printed on a voucher, and displayed via the one or more wagering input devices.

21. The method of claim 1, wherein the one or more wagering devices comprise at least one of a wagering terminal, a wagering workstation, a personal computer, a smart phone, a tablet computing device, a gaming machine, a slot machine, and a lottery machine.

22. The method of claim 1, wherein the wagering event comprises a pool or is progressive, wherein said pool is at least one of fixed, variable and guaranteed.

23. The method of claim 1, wherein where there are no winners of at least one award, said at least one award is rolled into another wagering event or at least partially awarded to an operator of the wagering event.

24. The method of claim 1, wherein the wagering event comprises at least one of a bonus and a consolation,

wherein designated players who have won qualify for the bonus and designated players who have lost qualify for the consolation, and

wherein correctly predicting an outcome of the bonus qualifies at least one designated player for at least a portion of a bonus prize and correctly predicting an outcome of the consolation qualifies at least one designated player for at least a portion of a consolation prize.

DraftKings, Ex. 1002, p. 249

25. A wagering system including one or more wagering input devices for allowing the placement of a wager on a wagering event, the wagering system comprising:

a system controller configured to communicate with the one or more wagering input devices, said system controller configured to:

initiate the wagering event for one or more players;

receive a wager via the one or more wagering input devices in response to a player desiring to participate in the wagering event;

initiate one or more of at least one of a buy-out offer and a partial buy-out offer to any number of the one or more players before the wagering event has been completed;

identify any acceptances of the at least one of a buy-out offer and partial buy-out offer;

complete the wagering event; and

determine if any players have won.

26. The wagering system of claim 25, wherein the wagering event comprises at least one of an entire sporting event, a partial sporting event, a divisible component of a sporting event, multiple independent sporting events occurring sequentially or concurrently, and a compilation of related sporting events.

27. The wagering system of claim 25, wherein the wagering event comprises at least one of a bonus and a consolation,

wherein designated players who have won qualify for the bonus leg and designated players who have lost qualify for the consolation leg, and

wherein correctly predicting an outcome of the bonus qualifies at least one designated player for at least a portion of a bonus prize and correctly predicting an outcome of the consolation qualifies at least one designated player for at least a portion of a consolation prize.

28. The wagering system of claim 25, wherein the wager comprises at least one of an accumulator and parlay wager comprising at least one or more combinations, wherein the one or more combinations are selectable by at least one of a player, a third party, and the wagering system, and wherein at any time before the wager has been completed, at least one partial buy-

DraftKings, Ex. 1002, p. 250

out offer is initiated to any number of the one or more players remaining eligible to win at least one of an award or a portion of an award.

29. The wagering system of claim 25, wherein the one or more players are eligible to win an award comprising one or more selected from the group consisting of monetary awards, nonmonetary awards, a prize, a payment, a designated currency, virtual currency, tokens, credits, coupons, services, personal property, real property, virtual property, assets, investments, negotiable instruments, commodities, food, lodging, entertainment, alleviation of obligations, gaming opportunities and wager enhancement.

30. The wagering system of claim 25, wherein identifying any acceptances of said at least one of a buy-out offer and partial buy-out offer further comprises that each of the players accepting the buy-out offer will no longer be eligible to at least exclusively win an award, wherein each of the players not accepting the buy-out offer will remain eligible to win an award, and wherein each of the players accepting a partial buy-out offer remains eligible to win at least a portion of an award.

31. A wagering system including one or more wagering input devices for allowing the placement of a wager on a wagering event, the wagering system comprising:

a system controller configured to communicate with the one or more wagering input devices, said system controller configured to:

initiate the wagering event for one or more players;

receive a wager via the one or more wagering input devices in response to a player desiring to participate in the wagering event;

initiate one or more of at least one of a buy-out offer and a partial buy-out offer to any number of the one or more players before the wagering event has been completed; and

identify any acceptances of the at least one of a buy-out offer and partial buy-out offer.

DraftKings, Ex. 1002, p. 251

32. The wagering system of claim 31, wherein the one or more players are eligible to win an award and the system controller is further configured to determine if any of the one or more players have won the award.

33. The wagering system of claim 32, wherein the award comprises one or more selected from the group consisting of monetary awards, nonmonetary awards, a prize, a payment, a designated currency, virtual currency, tokens, credits, coupons, services, personal property, real property, virtual property, assets, investments, negotiable instruments, commodities, food, lodging, entertainment, alleviation of obligations, gaming opportunities and wager enhancement.

34. The wagering system of claim 31, wherein the wagering event comprises one or more selected from the group consisting of sporting events, lotteries, real games, virtual games, live events, pre-recorded events, online events, broadcast events, slot machines, card games, keno, video games and racing.

35. The wagering system of claim 31 wherein the wagering event and wager comprises one or more of fixed odds single wagers, multiple wagers, full cover wagers, full cover wagers with singles, 'Any to Come' (ATC) or 'if cash' wagers, specialty wagers, forecasts, fixed, variable, guaranteed, parimutuel wagering, fixed-odds wagering, accumulator or parlay wagering, fixed odds, a pool, progressive, fixed pool, variable pool or guaranteed pool.

36. A method of conducting a wagering event for one or more players, wherein a player is presented with at least one of a buy-out offer and a partial buy-out offer prior to completion of the wagering event, the method comprising the steps of:

providing one or more wagering input devices in communication with a system controller through which one or more players may participate in a wagering event, said system controller being adapted for:

initiating the wagering event for one or more players;

receiving a wager via the one or more wagering input devices in response to a player desiring to participate in the wagering event;

DraftKings, Ex. 1002, p. 252

identifying one or more players eligible to win from among players participating in the wagering event;

initiating at least one of a buy-out offer and partial buy-out offer to any number of the one or more players that are eligible to win, said buy-out offer or partial buy-out offer being initiated at any time before the wagering event has been completed; and

identifying any acceptances of said at least one of a buy-out offer and partial buy-out offer that have been initiated.

37. The method of claim 36, further comprising completing the wagering event and determining if any of the players have won.

38. The method of claim 37, wherein the one or more players are eligible to win an award comprising one or more selected from the group consisting of monetary awards, nonmonetary awards, a prize, a payment, a designated currency, virtual currency, tokens, credits, coupons, services, personal property, real property, virtual property, assets, investments, negotiable instruments, commodities, food, lodging, entertainment, alleviation of obligations, gaming opportunities and wager enhancement.

39. The method of claim 36, wherein the wagering event comprises one or more selected from the group consisting of sporting events, lotteries, real games, virtual games, live events, pre-recorded events, online events, broadcast events, slot machines, card games, keno, video games and racing.

40. The method of claim 36, wherein the wagering event and wager comprises one or more of fixed odds single wagers, multiple wagers, full cover wagers, full cover wagers with singles, 'Any to Come' (ATC) or 'if cash' wagers, specialty wagers, forecasts, fixed, variable, guaranteed, parimutuel wagering, fixed-odds wagering, accumulator or parlay wagering, fixed odds, a pool, progressive, fixed pool, variable pool or guaranteed pool.

DraftKings, Ex. 1002, p. 253

ABSTRACT

A system, method and apparatus provides a unique betting product where players make selections in one or more different events. Players who are in contention to win may be offered an opportunity to sell their tickets, in whole or in part, in response to a full or partial buy-out offer made at any time prior to completion of a wagering event.

DraftKings, Ex. 1002, p. 254

FIGURE 1

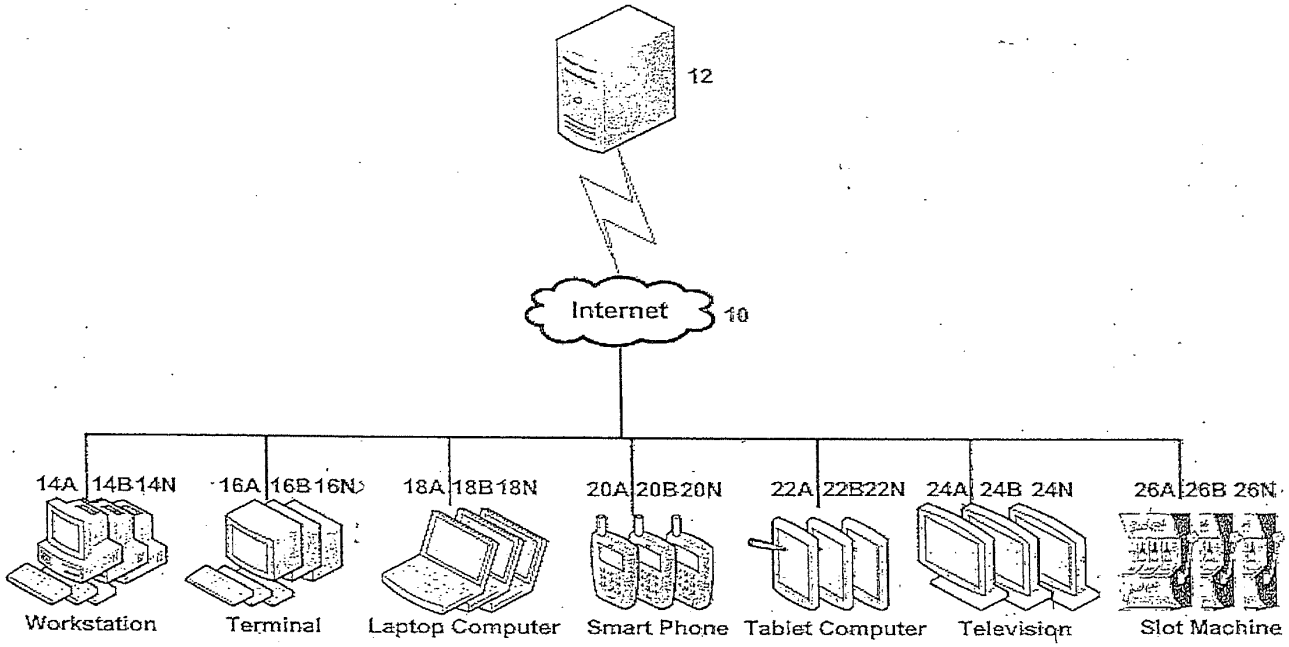
12
Internet
10
14A 14B 14N
16A 16B 16N
18A 18B 18N
20A 20B 20N
22A 22B 22N
24A 24B 24N
26A 26B 26N
Workstation
Terminal
Laptop Computer
Smart Phone
Tablet Computer
Television
Slot Machine

FIGURE 2

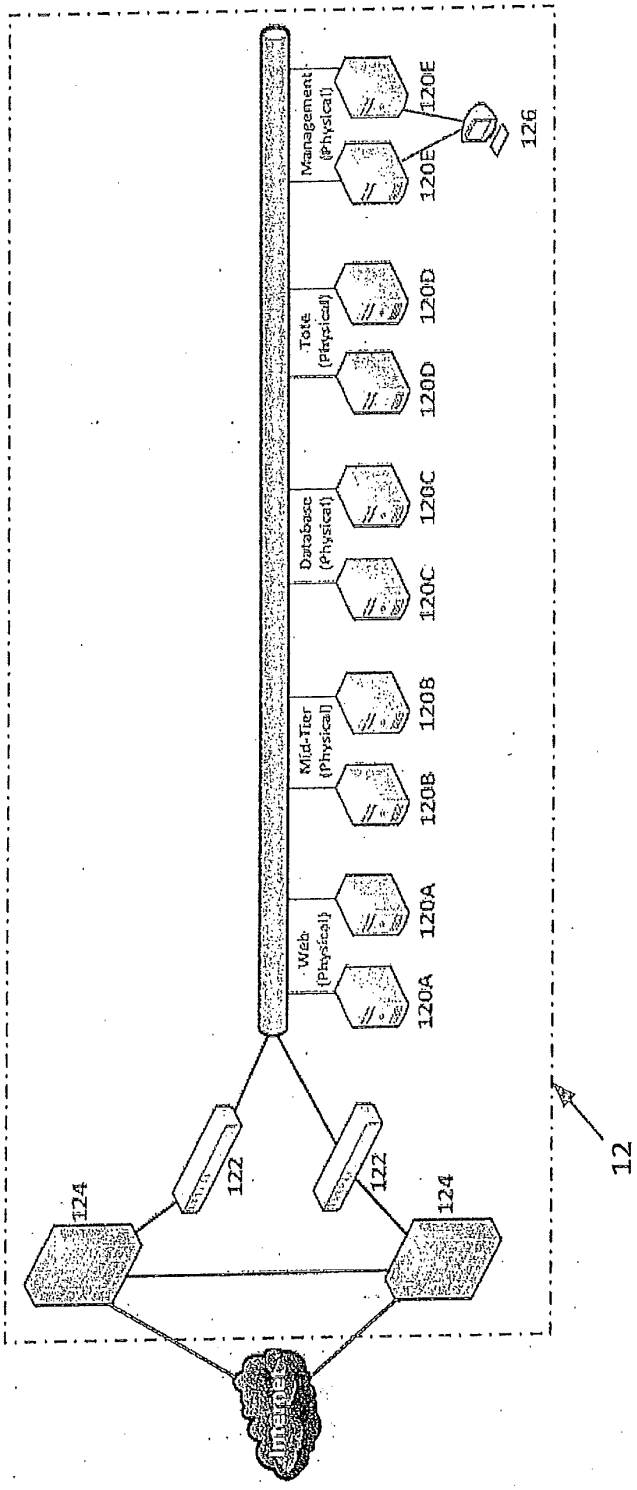
Internet
124
122
122
124
Web (Physical)
Mid-Tier (Physical)
Database (Physical)
Tote (Physical)
Management (Physical)
120A
120A
120B
120B
120C
120C
120D
120D
120E
120E
126
12

FIGURE 3

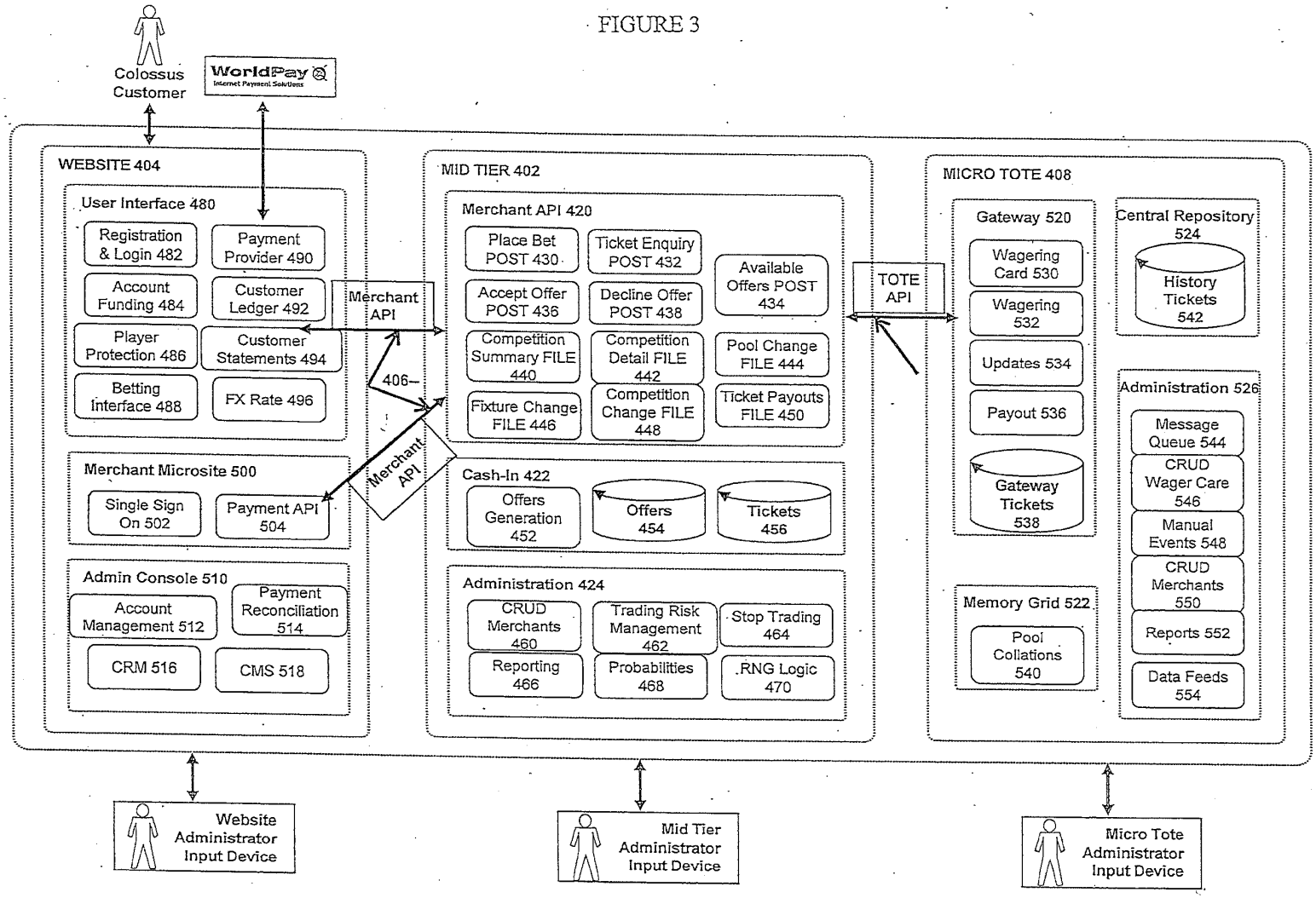
Colossus Customer
WorldPay
Internet Payment Solutions
WEBSITE 404
User Interface 480
Registration & Login 482
Payment Provider 490
Account Funding 484
Customer Ledger 492
Player Protection 486
Customer Statements 494
Betting Interface 488
FX Rate 496
Merchant API
406
Merchant Microsite 500
Single Sign On 502
Payment API 504
Merchant API
Admin Console 510
Account Management 512
Payment Reconciliation 514
CRM 516
CMS 518
MID TIER 402
Merchant API 420
Place Bet POST 430
Ticket Enquiry POST 432
Available Offers POST 434
Accept Offer POST 436
Decline Offer POST 438
Competition Summary FILE 440
Competition Detail FILE 442
Pool Change FILE 444
Fixture Change FILE 446
Competition Change FILE 448
Ticket Payouts FILE 450
Cash-In 422
Offers Generation 452
Offers 454
Tickets 456
Administration 424
CRUD Merchants 460
Trading Risk Management 462
Stop Trading 464
Reporting 466
Probabilities 468
RNG Logic 470
TOTE API
MICRO TOTE 408
Gateway 520
Wagering Card 530
Wagering 532
Updates 534
Payout 536
Gateway Tickets 538
Central Repository 524
History Tickets 542
Administration 526
Message Queue 544
CRUD Wager Care 546
Manual Events 548
CRUD Merchants 550
Reports 552
Data Feeds 554
Memory Grid 522
Pool Collations 540
Website Administrator Input Device
Mid Tier Administrator Input Device
Micro Tote Administrator Input Device

FIGURE 4

	2006-07	2007-08	2008-09	2009-10	2010-11	2011-12		5 Year Ave
ENG PREMIER LEAGUE	2.45	2.64	2.48	2.77	2.8	2.8		2.66
ESP LA LIGA	2.48	2.69	2.9	2.71	2.74	2.77		2.72
ITA SERIE A	2.55	2.55	2.6	2.61	2.51	2.56		2.56
GER BUNDESLIGA	2.74	2.81	2.92	2.83	2.92	2.87		2.85
FRA LIGUE 1	2.25	2.28	2.26	2.41	2.34	2.47		2.34
EUR CHAMPIONS LEAGUE	2.49	2.64	2.63	2.54	2.84	2.77		2.65
WORLD CUP	2.21	2.71	2.67	2.52	2.3	2.27		2.45

FIGURE 5

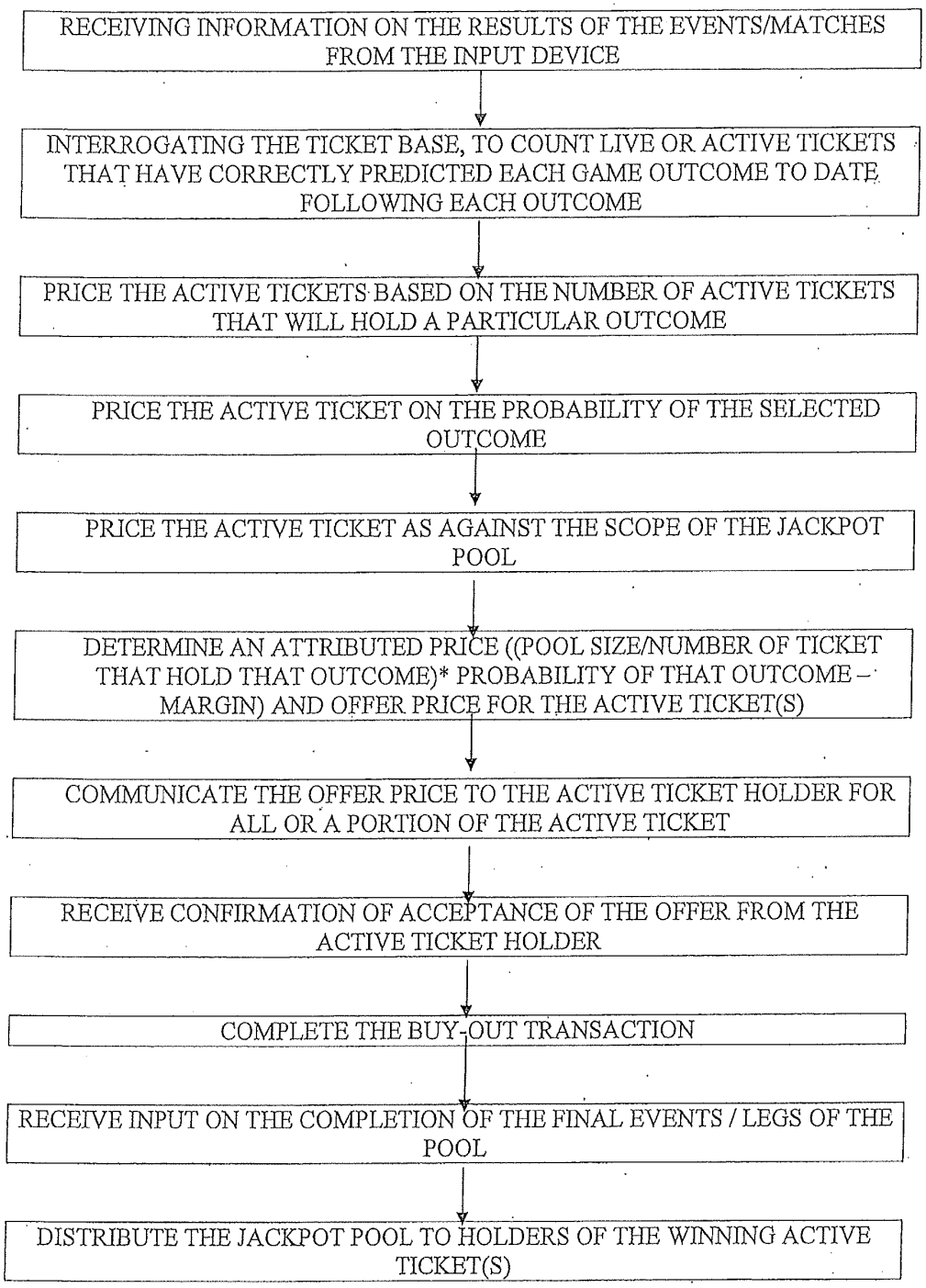
RECEIVING INFORMATION ON THE RESULTS OF THE EVENTS/MATCHES FROM THE INPUT DEVICE
INTERROGATING THE TICKET BASE, TO COUNT LIVE OR ACTIVE TICKETS THAT HAVE CORRECTLY PREDICTED EACH GAME OUTCOME TO DATE FOLLOWING EACH OUTCOME
PRICE THE ACTIVE TICKETS BASED ON THE NUMBER OF ACTIVE TICKETS THAT WILL HOLD A PARTICULAR OUTCOME
PRICE THE ACTIVE TICKET ON THE PROBABILITY OF THE SELECTED OUTCOME
PRICE THE ACTIVE TICKET AS AGAINST THE SCOPE OF THE JACKPOT POOL
DETERMINE AN ATTRIBUTED PRICE ((POOL SIZE/NUMBER OF TICKET THAT HOLD THAT OUTCOME)* PROBABILITY OF THAT OUTCOME – MARGIN) AND OFFER PRICE FOR THE ACTIVE TICKET(S)
COMMUNICATE THE OFFER PRICE TO THE ACTIVE TICKET HOLDER FOR ALL OR A PORTION OF THE ACTIVE TICKET
RECEIVE CONFIRMATION OF ACCEPTANCE OF THE OFFER FROM THE ACTIVE TICKET HOLDER
COMPLETE THE BUY-OUT TRANSACTION
RECEIVE INPUT ON THE COMPLETION OF THE FINAL EVENTS / LEGS OF THE POOL
DISTRIBUTE THE JACKPOT POOL TO HOLDERS OF THE WINNING ACTIVE TICKET(S)

IN THE UNITED STATES PATENT AND TRADEMARK OFFICE

Art Unit	:	**Customer No. 035811**
Examiner	:	
Serial No.	:	Docket No.: COB-13-1044CIP3-CON
Filed	: herewith	
Inventor(s)	: Bernard J. Marantelli	Confirmation No.:
Title	: WAGERING APPARATUS,	
	: METHODS AND SYSTEMS	Dated: May 12, 2014

INFORMATION DISCLOSURE STATEMENT

Commissioner for Patents
P.O. Box 1450
Alexandria, VA 22313-1450

Sir:

The Applicant encloses Form PTO-1449 together with a copy of each of the four (4) listed non-US publications. The documents are submitted under 37 CFR §1.56 and are believed related to this application.

The Applicant respectfully requests that this Information Disclosure Statement be officially entered into the file and that appropriate notification be made that it was considered by the Examiner.

Respectfully submitted,

Paul A. Taufer
Reg. No. 35,703

PAT/nn
(215) 656-3385

EAST\76251209.1

Form PTO-1449 US DEPARTMENT OF COMMERCE PATENT AND TRADEMARK OFFICE	ATTY. DOCKET NO. COB-13-1044CIP3-CON	SERIAL NO.
	APPLICANT Bernard J. Marantelli	
LIST OF PUBLICATIONS CITED BY APPLICANT *(Use several sheets if necessary)*	FILING DATE herewith	GROUP

US PATENT DOCUMENTS

EXAMINER INITIAL*		DOCUMENT NUMBER	DATE	NAME	CLASS	SUBCLASS	FILING DATE IF APPROPRIATE
	AA	2006/0237905 A1	10/26/06	Nicely et al.			
	AB	7,811,164 B1	10/12/10	Fox			
	AC	7,901,281 B2	03/08/11	Breslo			
	AD	8,602,884 B1	12/10/13	Marantelli			
	AE	2005/0116410 A1	06/02/05	Vlazny et al.			
	AF	2008/0153579 A1	06/26/08	Brenner et al.			
	AG	8,105,149 B2	01/31/12	DeWaal			
	AH	7,942,735 B2	05/17/11	Meyer et al.			
	AI	7,883,403 B2	02/08/11	Low et al.			
	AJ						
	AK						

FOREIGN PATENT DOCUMENTS

		DOCUMENT NUMBER	DATE	COUNTRY	CLASS	SUBCLASS	TRANSLATION YES	TRANSLATION NO
	AL							
	AM							
	AN							
	AO							
	AP							

OTHER PUBLICATIONS (Including Author, Title, Date, Pertinent Pages, Etc.)

	AR	A copy of GB Patent Application No. 1215708.7 filed September 4, 2012 with Filing Receipt.
		A copy of International Search Report and the Written Opinion of the International Searching Authority dated January 24, 2014 for International Application No. PCT/IB2013/002377.
	AS	A copy of International Search Report and the International Written Opinion dated April 24, 2014 for corresponding International Application No. PCT/IB2013/002962.
		A copy of International Search Report and the International Written Opinion dated April 25, 2014 for corresponding International Application No. PCT/IB2013/003028.
	AT	

EXAMINER	DATE CONSIDERED

*EXAMINER: Initial if publication considered, whether or not citation is in conformance with MPEP 609; Draw line through citation if not in conformance and not considered. Include copy of this form with next communication to Applicant.

5/7/14

PATENT COOPERATION TREATY

PCT

INTERNATIONAL SEARCH REPORT

(PCT Article 18 and Rules 43 and 44)

Applicant's or agent's file reference COB-13-1044CIP3-WO	**FOR FURTHER ACTION**	see Form PCT/ISA/220 as well as, where applicable, item 5 below.
International application No. PCT/IB2013/003028	International filing date *(day/month/year)* 20 August 2013 (20-08-2013)	(Earliest) Priority Date *(day/month/year)* 6 September 2012 (06-09-2012)
Applicant DIOGENES LIMITED		

This international search report has been prepared by this International Searching Authority and is transmitted to the applicant according to Article 18. A copy is being transmitted to the International Bureau.

This international search report consists of a total of 3 sheets.

[X] it is also accompanied by a copy of each prior art document cited in this report.

1. **Basis of the report**
   a. With regard to the **language**, the international search was carried out on the basis of:
      [X] the international application in the language in which it was filed
      [ ] a translation of the international application into _____, which is the language of a translation furnished for the purposes of international search (Rules 12.3(a) and 23.1(b))
   b. [ ] This international search report has been established taking into account **the rectification of an obvious mistake** authorized by or notified to this Authority under Rule 91 (Rule 43.6*bis*(a)).
   c. [ ] With regard to any **nucleotide and/or amino acid sequence** disclosed in the international application, see Box No. I.
2. [ ] **Certain claims were found unsearchable** (See Box No. II)
3. [ ] **Unity of invention is lacking** (see Box No III)
4. With regard to the **title**,
   [X] the text is approved as submitted by the applicant
   [ ] the text has been established by this Authority to read as follows:
5. With regard to the **abstract**,
   [X] the text is approved as submitted by the applicant
   [ ] the text has been established, according to Rule 38.2, by this Authority as it appears in Box No. IV. The applicant may, within one month from the date of mailing of this international search report, submit comments to this Authority
6. With regard to the **drawings**,
   a. the figure of the **drawings** to be published with the abstract is Figure No. 1
      [X] as suggested by the applicant
      [ ] as selected by this Authority, because the applicant failed to suggest a figure
      [ ] as selected by this Authority, because this figure better characterizes the invention
   b. [ ] none of the figures is to be published with the abstract

Form PCT/ISA/210 (first sheet) (July 2009)

I...ERNATIONAL SEARCH REPORT

International application No
PCT/IB2013/003028

A. CLASSIFICATION OF SUBJECT MATTER
INV. G07F17/32 G06Q50/34
ADD.

According to International Patent Classification (IPC) or to both national classification and IPC

B. FIELDS SEARCHED

Minimum documentation searched (classification system followed by classification symbols)
G06Q G07F

Documentation searched other than minimum documentation to the extent that such documents are included in the fields searched

Electronic data base consulted during the international search (name of data base and, where practicable, search terms used)

EPO-Internal

C. DOCUMENTS CONSIDERED TO BE RELEVANT

Category*	Citation of document, with indication, where appropriate, of the relevant passages	Relevant to claim No.
L	EPO: "Mitteilung des Europäischen Patentamts vom 1. Oktober 2007 über Geschäftsmethoden = Notice from the European Patent Office dated 1 October 2007 concerning business methods = Communiqué de l'Office européen des brevets,en date du 1er octobre 2007, concernant les méthodes dans le domaine des activités", JOURNAL OFFICIEL DE L'OFFICE EUROPEEN DES BREVETS.OFFICIAL JOURNAL OF THE EUROPEAN PATENT OFFICE.AMTSBLATTT DES EUROPAEISCHEN PATENTAMTS, OEB, MUNCHEN, DE, vol. 30, no. 11, 1 November 2007 (2007-11-01), pages 592-593, XP007905525, ISSN: 0170-9291 The claimed subject matter, with due regard to the description and drawings, relates to processes comprised in the list	1-30

[X] Further documents are listed in the continuation of Box C. [ ] See patent family annex.

* Special categories of cited documents :

"A" document defining the general state of the art which is not considered to be of particular relevance

"E" earlier application or patent but published on or after the international filing date

"L" document which may throw doubts on priority claim(s) or which is cited to establish the publication date of another citation or other special reason (as specified)

"O" document referring to an oral disclosure, use, exhibition or other means

"P" document published prior to the international filing date but later than the priority date claimed

"T" later document published after the international filing date or priority date and not in conflict with the application but cited to understand the principle or theory underlying the invention

"X" document of particular relevance; the claimed invention cannot be considered novel or cannot be considered to involve an inventive step when the document is taken alone

"Y" document of particular relevance; the claimed invention cannot be considered to involve an inventive step when the document is combined with one or more other such documents, such combination being obvious to a person skilled in the art

"&" document member of the same patent family

Date of the actual completion of the international search	Date of mailing of the international search report
14 April 2014	25/04/2014

Name and mailing address of the ISA/	Authorized officer
European Patent Office, P.B. 5818 Patentlaan 2 NL - 2280 HV Rijswijk Tel. (+31-70) 340-2040, Fax: (+31-70) 340-3016	Bassanini, Anna

2

Form PCT/ISA/210 (second sheet) (April 2005)

DraftKings, Ex. 1002, p. 263

C(Continuation). DOCUMENTS CONSIDERED TO BE RELEVANT

Category*	Citation of document, with indication, where appropriate, of the relevant passages	Relevant to claim No.
	of subject matter and activities for which no search is required under Rule 39 PCT. The only identifiable technical aspects of the claimed invention relate to the use of conventional, general-purpose data processing technology for processing data of an inherently non-technical nature. The information technology employed is considered to have been generally known as it was widely available to everyone at the date of filing/priority of the present application. The notoriety of such prior art cannot reasonably be contested. No documentary evidence was therefore considered required. -----	

2

PATENT COOPERATION TREATY

From the
INTERNATIONAL SEARCHING AUTHORITY

To:

see form PCT/ISA/220

PCT

WRITTEN OPINION OF THE
INTERNATIONAL SEARCHING AUTHORITY
(PCT Rule 43*bis*.1)

Date of mailing
(day/month/year) see form PCT/ISA/210 (second sheet)

Applicant's or agent's file reference
see form PCT/ISA/220

FOR FURTHER ACTION
See paragraph 2 below

International application No.	International filing date *(day/month/year)*	Priority date *(day/month/year)*
PCT/IB2013/003028	20.08.2013	06.09.2012

International Patent Classification (IPC) or both national classification and IPC
INV. G07F17/32 G06Q50/34

Applicant
DIOGENES LIMITED

1. This opinion contains indications relating to the following items:

- ☒ Box No. I Basis of the opinion
- ☐ Box No. II Priority
- ☐ Box No. III Non-establishment of opinion with regard to novelty, inventive step and industrial applicability
- ☐ Box No. IV Lack of unity of invention
- ☒ Box No. V Reasoned statement under Rule 43*bis*.1(a)(*i*) with regard to novelty, inventive step and industrial applicability; citations and explanations supporting such statement
- ☐ Box No. VI Certain documents cited
- ☐ Box No. VII Certain defects in the international application
- ☐ Box No. VIII Certain observations on the international application

2. **FURTHER ACTION**

If a demand for international preliminary examination is made, this opinion will usually be considered to be a written opinion of the International Preliminary Examining Authority ("IPEA") except that this does not apply where the applicant chooses an Authority other than this one to be the IPEA and the chosen IPEA has notifed the International Bureau under Rule 66.1*bis*(b) that written opinions of this International Searching Authority will not be so considered.

If this opinion is, as provided above, considered to be a written opinion of the IPEA, the applicant is invited to submit to the IPEA a written reply together, where appropriate, with amendments, before the expiration of 3 months from the date of mailing of Form PCT/ISA/220 or before the expiration of 22 months from the priority date, whichever expires later.

For further options, see Form PCT/ISA/220.

Name and mailing address of the ISA:	Date of completion of this opinion	Authorized Officer
European Patent Office P.B. 5818 Patentlaan 2 NL-2280 HV Rijswijk - Pays Bas Tel. +31 70 340 - 2040 Fax: +31 70 340 - 3016	see form PCT/ISA/210	Bassanini, Anna Telephone No. +31 70 340-2036

Form PCT/ISA/237 (Cover Sheet) (July 2009)

Box No. I Basis of the opinion

1. With regard to the **language**, this opinion has been established on the basis of:

   ☒ the international application in the language in which it was filed

   ☐ a translation of the international application into , which is the language of a translation furnished for the purposes of international search (Rules 12.3(a) and 23.1 (b)).

2. ☐ This opinion has been established taking into account the **rectification of an obvious mistake** authorized by or notified to this Authority under Rule 91 (Rule 43bis.1(a))

3. With regard to any **nucleotide and/or amino acid sequence** disclosed in the international application, this opinion has been established on the basis of a sequence listing filed or furnished:

   a. (means)

   ☐ on paper

   ☐ in electronic form

   b. (time)

   ☐ in the international application as filed

   ☐ together with the international application in electronic form

   ☐ subsequently to this Authority for the purposes of search

4. ☐ In addition, in the case that more than one version or copy of a sequence listing has been filed or furnished, the required statements that the information in the subsequent or additional copies is identical to that in the application as filed or does not go beyond the application as filed, as appropriate, were furnished.

5. Additional comments:

Box No. V Reasoned statement under Rule 43*bis*.1(a)(i) with regard to novelty, inventive step or industrial applicability; citations and explanations supporting such statement

1. Statement

Novelty (N)	Yes:	Claims	1-30
	No:	Claims	
Inventive step (IS)	Yes:	Claims	
	No:	Claims	1-30
Industrial applicability (IA)	Yes:	Claims	1-30
	No:	Claims	

2. Citations and explanations

   see separate sheet

Re Item V

Reasoned statement with regard to novelty, inventive step or industrial applicability; citations and explanations supporting such statement

1 The claimed subject matter, with due regard to the description and drawings, relates to processes comprised in the list of subject matter and activities for which no search is required under Rule 39 PCT.

The only identifiable technical aspects of the claimed invention are deemed to relate to the use of conventional, general-purpose data processing technology. The information technology employed is considered to have been generally known as it was widely available to everyone at the date of priority of the present application. The notoriety of such prior art cannot reasonably be contested, and no documentary evidence was therefore considered required.

2 Claims 1-30 of the application, although not completely devoid of technical character, are thus regarded as merely specifying commonplace features relating to a technological implementation of subject matter for which no search is required under Rule 39 PCT, without involving an inventive step (Article 33(3) PCT). No technical solution defined in response to a problem could be identified within the content of the application as originally filed. Any problems which are addressed do not appear to require a technical, but rather an administrative or organisational, i.e. business, solution. Whilst the implementation of such solutions may include the use of generic technical features, these merely serve their well known functions as would be recognised by the skilled person in the technical field under consideration.

2.1 The subject-matter of this application relates to wagering. This is *per se* a non-technical aspect, for which no search is required under Rule39 PCT.

2.2 The problem being addressed resides in creating new wagering products to generate and maintain consumer interest (see the description, page 1, l. 31-32). This problem is also non-technical.

2.3 On the non-technical level, the solution proposed by the present application consists of creating a unique betting product where players make selections in a number of different "legs" including a variety of different events. Players who correctly select a certain portion of the winners of each leg have an opportunity to obtain monetary and/or other prizes. This solution is *per se* a gaming and business, i.e. non-technical scheme.

2.4 The implementation of this solution as proposed in the present application is a mere automation of the above mentioned non-technical scheme. The person skilled in the art, made aware of the non-technical method, guided by the constraints implied by this method, would implement it without the exercise of an inventive activity. No technical problem has been convincingly laid out and none is apparent to the person skilled in the art from reading the current application. Therefore, the problem dealt with is non-technical. The only technical aspect that is present is the use of a computer system for implementing the basic administrative task. However, the feature of executing this method on a computer system does not go beyond the basic computer functions associated with the implementation of any administrative task on a computer system which are standard technology and form part of the general knowledge of the skilled person in the art. When analysing the application, the examiner was unable to discover any technical details that go beyond mentioning at a very high level the presence of a networked computer system and ordinary data processing. It is also noted that no further technical effect can be seen in the implementation of this administrative method.

2.5 The defined subject-matter accordingly lacks inventive step, as no technical solution to a realised technical problem has been proposed and no technical effect or result which would be unexpected or surprising to the person skilled in the art is apparent.

2.6 The person skilled in the art, with general knowledge of the technical field and normal access to examples and textbooks, would apply the measures as described in the present application and defined in its claims without the use of inventive skill to arrive at the desired result. As noted in section 1 of this communication, the examiner does not find it necessary at present to refer to any particular art in support of this view due to the paucity of technical definition going beyond the everyday for the person skilled in the technical art.

Bitte beachten Sie, dass angeführte Nichtpatentliteratur (wie z. B. wissenschaftliche oder technische Dokumente) je nach geltendem Recht dem Urheberrechtsschutz und/oder anderen Schutzarten für schriftliche Werke unterliegen könnte. Die Vervielfältigung urheberrechtlich geschützter Texte, ihre Verwendung in anderen elektronischen oder gedruckten Publikationen und ihre Weitergabe an Dritte ist ohne ausdrückliche Zustimmung des Rechtsinhabers nicht gestattet.

Veuillez noter que les ouvrages de la littérature non-brevets qui sont cités, par exemple les documents scientifiques ou techniques, etc., peuvent être protégés par des droits d'auteur et/ou toute autre protection des écrits prévue par les législations applicables. Les textes ainsi protégés ne peuvent être reproduits ni utilisés dans d'autres publications électroniques ou imprimées, ni rediffusés sans l'autorisation expresse du titulaire du droit d'auteur.

Please be aware that cited works of non-patent literature such as scientific or technical documents or the like may be subject to copyright protection and/or any other protection of written works as appropriate based on applicable laws. Copyrighted texts may not be copied or used in other electronic or printed publications or re-distributed without the express permission of the copyright holder.

XS CPRTENFRDE

BNSDOCID: <XS_____2006100103CF_I_>

nicht verpflichtet, eine internationale vorläufige Prüfung einer Anmeldung durchzuführen, wenn der Anmeldungsgegenstand eine Geschäftsmethode betrifft (Regel 67.1 iii) PCT).

In Fällen, in denen der beanspruchte Gegenstand technische Mittel umfasst, erstellt das EPA einen Recherchenbericht. Sind die verwendeten technischen Mittel so konventionell, dass sie am Anmeldetag jedermann ohne Weiteres zugänglich waren und aufgrund ihrer Bekanntheit keine Beweisunterlagen für notwendig erachtet werden, wird im Recherchenbericht kein Dokument angeführt. In den Recherchenbericht wird eine Erklärung aufgenommen, der zufolge diese technischen Mittel als so banal betrachtet werden, dass sich die Angabe von Unterlagen erübrigt.

EPÜ

Darüber hinaus möchte das EPA die Anmelder daran erinnern, dass Geschäftsmethoden als solche nach Artikel 52 (2) c) und (3) EPÜ vom Patentschutz ausgeschlossen sind. Zu Ansprüchen in europäischen Patentanmeldungen, die sich auf nichts weiter als solche Methoden beziehen, wird keine Recherche durchgeführt. Eine Erklärung, in der dies festgestellt wird, tritt an die Stelle des europäischen Recherchenberichts bzw. des ergänzenden Recherchenberichts gemäß Regel 45 EPÜ[2].

In Fällen, in denen der beanspruchte Gegenstand technische Mittel umfasst, erstellt das EPA einen Recherchenbericht oder einen Teilrecherchenbericht. Sind die verwendeten technischen Mittel so konventionell, dass sie am Anmeldetag jedermann ohne Weiteres zugänglich waren und aufgrund ihrer Bekanntheit keine Beweisunterlagen für notwendig erachtet werden, wird im Recherchenbericht kein Dokument angeführt. In den Recherchenbericht wird eine Erklärung aufgenommen, der zufolge diese technischen Mittel als so banal betrachtet werden, dass sich die Angabe von Unterlagen erübrigt.

[2] Entspricht Regel 63 im EPÜ 2000.

carry out an international preliminary examination on an application if its subject matter is a method of doing business (Rule 67.1(iii) PCT).

In cases where the claimed subject matter involves technical means the EPO will issue a search report. Where the employed technical means are so conventional that they were widely available and no documentary evidence is considered required because of their notoriety, no document will be cited in the search report. A statement will be inserted in the search report indicating that these technical means are considered to be so commonplace that no citation is considered necessary.

EPC

The EPO also wishes to remind applicants that methods of doing business, as such, are excluded from patentability pursuant to Article 52(2)(c) and (3) EPC. Claims of European patent applications which relate to no more than such methods will not be searched. A declaration to this effect will take the place of the European or supplementary search report pursuant to Rule 45 EPC[2].

In cases where the claimed subject matter involves technical means the EPO will issue a search report or partial search report. Where the employed technical means are so conventional that they were widely available to everyone at the date of filing and no documentary evidence is considered required because of their notoriety, no document will be cited in the search report. A statement will be inserted in the search report indicating that these technical means are considered to be so commonplace that no citation is considered necessary.

[2] Corresponds to Rule 63 in EPC 2000.

tionale n'a été établi (règle 66.1e) PCT). En outre, l'OEB n'a pas l'obligation de procéder à l'examen préliminaire international à l'égard d'une demande dont l'objet est une méthode en vue de faire des affaires (règle 67.1iii) PCT).

L'OEB établira un rapport de recherche dans les cas où l'objet revendiqué implique des moyens techniques. Si les moyens techniques sont courantes au point d'avoir été largement accessibles à tout un chacun à la date de dépôt, et si aucun moyen de preuve n'est considéré comme requis en raison de leur notoriété, aucun document ne sera cité dans le rapport de recherche. Une déclaration figurera dans le rapport de recherche, selon laquelle ces moyens techniques sont considérées comme étant si banales qu'aucune citation n'est tenue pour nécessaire.

CBE

L'OEB voudrait également rappeler aux déposants que les méthodes dans le domaine des activités économiques sont en tant que telles exclues de la brevetabilité conformément à l'article 52(2)c) et (3) CBE. Les revendications qui figurent dans les demandes de brevet européen et qui ont uniquement trait à de telles méthodes ne feront pas l'objet d'une recherche. Une déclaration en ce sens remplacera le rapport de recherche européenne ou le rapport de recherche complémentaire, conformément à la règle 45 CBE[2].

L'OEB établira un rapport de recherche ou un rapport partiel de recherche dans les cas où l'objet revendiqué implique des moyens techniques. Si les moyens techniques sont courantes au point d'avoir été largement accessibles à tout un chacun à la date de dépôt, et si aucun moyen de preuve n'est considéré comme requis en raison de leur notoriété, aucun document ne sera cité dans le rapport de recherche. Une déclaration figurera dans le rapport de recherche, selon laquelle ces moyens techniques sont considérées comme étant si banales qu'aucune citation n'est tenue pour nécessaire.

[2] Correspond à la règle 63 dans la CBE 2000.

DraftKings, Ex. 1002, p. 270

RECEIVED
JAN 24 2014
IP DEPT.

PATENT COOPERATION TREATY

From the INTERNATIONAL SEARCHING AUTHORITY

To:

DLA PIPER LLP (US)
One Liberty Place
1650 Market Street, Suite 4900
Philadelphia, PA 19103
US

PCT

NOTIFICATION OF TRANSMITTAL OF THE INTERNATIONAL SEARCH REPORT AND THE WRITTEN OPINION OF THE INTERNATIONAL SEARCHING AUTHORITY, OR THE DECLARATION

(PCT Rule 44.1)

	Date of mailing *(day/month/year)* 24 January 2014
Applicant's or agent's file reference	**FOR FURTHER ACTION** See paragraphs 1 and 4 below
International application No. **PCT/IB2013/002377**	International filing date 19 August 2013
Applicant MARANTELLI, Bernard J.	

Claim Amendment due 3/24/14 gr

1. [X] The applicant is hereby notified that the international search report and the written opinion of the International Searching Authority have been established and are transmitted herewith.
Filing of amendments and statement under Article 19:
The applicant is entitled, if he so wishes, to amend the claims of the international application (see Rule 46):
When? The time limit for filing such amendments is normally two months from the date of transmittal of the international search report.
Where? Directly to the International Bureau of WIPO, 34 chemin des Colombettes 1211 Geneva 20, Switzerland, Facsimile No.: +41 22 338 82 70
For more detailed instructions, see *PCT Applicant's Guide*, International Phase, paragraphs 9.004 – 9.011 .

2. [ ] The applicant is hereby notified that no international search report will be established and that the declaration under Article 17(2)(a) to that effect and the written opinion of the International Searching Authority are transmitted herewith.

3. [ ] **With regard to any protest** against payment of (an) additional fee(s) under Rule 40.2, the applicant is notified that:
   - [ ] the protest together with the decision thereon has been transmitted to the International Bureau together with the applicant's request to forward the texts of both the protest and the decision thereon to the designated Offices.
   - [ ] no decision has been made yet on the protest; the applicant will be notified as soon as a decision is made.

4. **Reminders**
The applicant may submit comments on an informal basis on the written opinion of the International Searching Authority to the International Bureau. The International Bureau will send a copy of such comments to all designated Offices unless an international preliminary examination report has been or is to be established. Following the expiration of 30 months from the priority date, these comments will also be made available to the public.
Shortly after the expiration of **18 months** from the priority date, the international application will be published by the International Bureau. If the applicant wishes to avoid or postpone publication, a notice of withdrawal of the international application, or of the priority claim, must reach the International Bureau before the completion of the technical preparations for international publication (Rules 90*bis*.1 and 90*bis*.3).
Within **19 months** from the priority date, but only in respect of some designated Offices, a demand for international preliminary examination must be filed if the applicant wishes to postpone the entry into the national phase **until 30 months** from the priority date (in some Offices even later); otherwise, the applicant must, **within 20 months** from the priority date, perform the prescribed acts for entry into the national phase before those designated Offices.
In respect of other designated Offices, the time limit of **30 months** (or later) will apply even if no demand is filed within 19 months.
For details about the applicable time limits, Office by Office, see www.wipo.int/pct/en/texts/time_limits.html and the *PCT Applicant's Guide*, National Chapters.

Name and mailing address of the ISA/AU	**Authorised officer**
AUSTRALIAN PATENT OFFICE PO BOX 200, WODEN ACT 2606, AUSTRALIA Email address: pct@ipaustralia.gov.au Facsimile No. +61 2 6283 7999	Boris Cetinich AUSTRALIAN PATENT OFFICE (ISO 9001 Quality Certified Service) Telephone No. 0399359619

PATENT COOPERATION TREATY

PCT

INTERNATIONAL SEARCH REPORT

(PCT Article 18 and Rules 43 and 44)

Applicant's or agent's file reference	**FOR FURTHER ACTION**	see Form PCT/ISA/220 as well as, where applicable, item 5 below.
International application No. **PCT/IB2013/002377**	International filing date *(day/month/year)* 19 August 2013	(Earliest) Priority Date *(day/month/year)* 02 August 2013

Applicant

MARANTELLI, Bernard J.

This international search report has been prepared by this International Searching Authority and is transmitted to the applicant according to Article 18. A copy is being transmitted to the International Bureau.

This international search report consists of a total of **4** sheets.

☐ It is also accompanied by a copy of each prior art document cited in this report.

1. **Basis of the report**

a. With regard to the **language,** the international search was carried out on the basis of:

☒ The international application in the language in which it was filed.

☐ A translation of the international application into , which is the language of a translation furnished for the purposes of international search (Rules 12.3(a) and 23.1(b)).

b. ☐ This international search report has been established taking into account the **rectification of an obvious mistake** authorized by or notified to this Authority under Rule 91 (Rule 43.6*bis*(a)).

c. ☐ With regard to any **nucleotide and/or amino acid sequence** disclosed in the international application, see Box No. I.

2. ☐ **Certain claims were found unsearchable** (See Box No. II).

3. ☐ **Unity of invention is lacking** (See Box No. III).

4. With regard to the **title,**

☒ the text is approved as submitted by the applicant.

☐ the text has been established by this Authority to read as follows:

5. With regard to the **abstract,**

☒ the text is approved as submitted by the applicant.

☐ the text has been established, according to Rule 38.2, by this Authority as it appears in Box No. IV. The applicant may, within one month from the date of mailing of this international search report, submit comments to this Authority.

6. With regard to the **drawings,**

a. the figure of the **drawings** to be published with the abstract is Figure No. **5**

☐ as suggested by the applicant.

☐ as selected by this Authority, because the applicant failed to suggest a figure.

☒ as selected by this Authority, because this figure better characterizes the invention.

b. ☐ none of the figures is to be published with the abstract.

INTERNATIONAL SEARCH REPORT

International application No.
PCT/IB2013/002377

A. CLASSIFICATION OF SUBJECT MATTER

G06Q 50/34 (2012.01)

According to International Patent Classification (IPC) or to both national classification and IPC

B. FIELDS SEARCHED

Minimum documentation searched (classification system followed by classification symbols)

Documentation searched other than minimum documentation to the extent that such documents are included in the fields searched

Electronic data base consulted during the international search (name of data base and, where practicable, search terms used)

EPODOC, WPI, FREE PATENTS ONLINE and GOOGLE:

multi-leg, multi-event, multi-select, multi-bet, multi-wager, buy out, cash in, offer, proposal, bid, proffer, overture, potential, possible, likely, probable, award, jackpot, pool, reward, prize and winning with similar terms and synonyms.

C. DOCUMENTS CONSIDERED TO BE RELEVANT

Category*	Citation of document, with indication, where appropriate, of the relevant passages	Relevant to claim No.
	Documents are listed in the continuation of Box C	

[X] Further documents are listed in the continuation of Box C [X] See patent family annex

* Special categories of cited documents:

"A" document defining the general state of the art which is not considered to be of particular relevance

"E" earlier application or patent but published on or after the international filing date

"L" document which may throw doubts on priority claim(s) or which is cited to establish the publication date of another citation or other special reason (as specified)

"O" document referring to an oral disclosure, use, exhibition or other means

"P" document published prior to the international filing date but later than the priority date claimed

"T" later document published after the international filing date or priority date and not in conflict with the application but cited to understand the principle or theory underlying the invention

"X" document of particular relevance; the claimed invention cannot be considered novel or cannot be considered to involve an inventive step when the document is taken alone

"Y" document of particular relevance; the claimed invention cannot be considered to involve an inventive step when the document is combined with one or more other such documents, such combination being obvious to a person skilled in the art

"&" document member of the same patent family

Date of the actual completion of the international search	Date of mailing of the international search report
24 January 2014	24 January 2014
Name and mailing address of the ISA/AU	**Authorised officer**
AUSTRALIAN PATENT OFFICE PO BOX 200, WODEN ACT 2606, AUSTRALIA Email address: pct@ipaustralia.gov.au Facsimile No.: +61 2 6283 7999	Boris Cetinich AUSTRALIAN PATENT OFFICE (ISO 9001 Quality Certified Service) Telephone No. 0399359619

Form PCT/ISA/210 (fifth sheet) (July 2009)

INTERNATIONAL SEARCH REPORT C (Continuation). DOCUMENTS CONSIDERED TO BE RELEVANT		International application No. **PCT/IB2013/002377**
Category*	Citation of document, with indication, where appropriate, of the relevant passages	Relevant to claim No.
A	US 2006/0237905 A1 (NICELY et al.) 26 October 2006 whole document	1-37
A	US 7,811,164 B1 (SLOMIANY et al.) 12 October 2010 whole document	1-37
A	US 7,901,281 B2 (BRESLO) 08 March 2011 whole document	1-37
E	US 8,602,884 B1 (MARABTELLI) 10 December 2013 claims 1-28	1-37

Form PCT/ISA/210 (fifth sheet) (July 2009)

INTERNATIONAL SEARCH REPORT Information on patent family members	International application No. **PCT/IB2013/002377**

This Annex lists known patent family members relating to the patent documents cited in the above-mentioned international search report. The Australian Patent Office is in no way liable for these particulars which are merely given for the purpose of information.

Patent Document/s Cited in Search Report		Patent Family Member/s	
Publication Number	**Publication Date**	**Publication Number**	**Publication Date**
US 2006/0237905 A1	26 Oct 2006	AU 2007231816 B2	14 Mar 2013
		CA 2610131 A1	10 May 2008
		EP 1756782 A2	28 Feb 2007
		EP 1938872 A2	02 Jul 2008
		EP 1938872 B1	30 May 2012
		US 2006237905 A1	26 Oct 2006
		US 7533885 B2	19 May 2009
		US 2007120320 A1	31 May 2007
		US 7674172 B2	09 Mar 2010
		US 2009305779 A1	10 Dec 2009
		US 7828294 B2	09 Nov 2010
		US 2010144419 A1	10 Jun 2010
		US 8152171 B2	10 Apr 2012
		WO 2005081958 A2	09 Sep 2005
US 7811164 B1	12 Oct 2010	None	
US 7901281 B2	08 Mar 2011	US 7695360 B2	13 Apr 2010
		US 2010160024 A1	24 Jun 2010
		US 7901281 B2	08 Mar 2011
		US 2010160025 A1	24 Jun 2010
		US 8002622 B2	23 Aug 2011
		US 2010160026 A1	24 Jun 2010
US 8602884 B1	10 Dec 2013	None	

End of Annex

Due to data integration issues this family listing may not include 10 digit Australian applications filed since May 2001.

C0B-13-1044

RECEIVED WO

JAN 23 2014

IP DEPT.

PATENT COOPERATION TREATY

From the:
INTERNATIONAL SEARCHING AUTHORITY

To:

DLA PIPER LLP (US)
One Liberty Place
1650 Market Street, Suite 4900
Philadelphia, PA 19103
US

PCT

WRITTEN OPINION OF THE
INTERNATIONAL SEARCHING AUTHORITY

(PCT Rule 43*bis*.1)

Date of mailing *(day/month/year)*
24 January 2014

Applicant's or agent's file reference	**FOR FURTHER ACTION** See paragraph 2 below

International application No.	International filing date *(day/month/year)*	Priority date *(day/month/year)*
PCT/IB2013/002377	19 August 2013	02 August 2013

International Patent Classification (IPC) or both national classification and IPC
G06Q 50/34 (2012.01)

Applicant
MARANTELLI, Bernard J.

1. This opinion contains indications relating to the following items:

[X]	Box No. I	Basis of the opinion
[X]	Box No. II	Priority
[ ]	Box No. III	Non-establishment of opinion with regard to novelty, inventive step and industrial applicability
[ ]	Box No. IV	Lack of unity of invention
[X]	Box No. V	Reasoned statement under Rule 43*bis*.1(a)(i) with regard to novelty, inventive step and industrial applicability; citations and explanations supporting such statement
[X]	Box No. VI	Certain documents cited
[ ]	Box No. VII	Certain defects in the international application
[ ]	Box No. VIII	Certain observations on the international application

2. **FURTHER ACTION**

If a demand for international preliminary examination is made, this opinion will be considered to be a written opinion of the International Preliminary Examining Authority ("IPEA") except that this does not apply where the applicant chooses an Authority other than this one to be the IPEA and the chosen IPEA has notified the International Bureau under Rule 66.1*bis*(b) that written opinions of this International Searching Authority will not be so considered.

If this opinion is, as provided above, considered to be a written opinion of the IPEA, the applicant is invited to submit to the IPEA a written reply together, where appropriate, with amendments, before the expiration of 3 months from the date of mailing of Form PCT/ISA/220 or before the expiration of 22 months from the priority date, whichever expires later.

For further options, see Form PCT/ISA/220.

Name and mailing address of the ISA	Date of completion of this opinion	**Authorised Officer**
AUSTRALIAN PATENT OFFICE PO BOX 200, WODEN ACT 2606, AUSTRALIA Email address: pct@ipaustralia.gov.au Facsimile No. +61 2 6283 7999	24 January 2014	Boris Cetinich AUSTRALIAN PATENT OFFICE (ISO 9001 Quality Certified Service) Telephone No. 0399359619

Form PCT/ISA/237 (Cover sheet) (July 2011)

WRITTEN OPINION OF THE INTERNATIONAL SEARCHING AUTHORITY

International application No.

PCT/IB2013/002377

Box No. I **Basis of this opinion**

1. With regard to the **language,** this opinion has been established on the basis of:

   [X] The international application in the language in which it was filed

   [ ] A translation of the international application into, , which is the language of a translation furnished for the purposes of international search (under Rules 12.3(a) and 23.1(b)).

2. [ ] This opinion has been established taking into account **the rectification of an obvious mistake** authorized by or notified to this Authority under Rule 91 (Rule 43*bis*.1(a))

3. With regard to any **nucleotide and/or amino acid sequence** disclosed in the international application, this opinion has been established on the basis of a sequence listing filed or furnished:

   a. (means)

   [ ] on paper

   [ ] in electronic form

   b. (time)

   [ ] in the international application as filed

   [ ] together with the international application in electronic form

   [ ] subsequently to this Authority for the purposes of search

4. [ ] In addition, in the case that more than one version or copy of a sequence listing has been filed or furnished, the required statements that the information in the subsequent or additional copies is identical to that in the application as filed or does not go beyond the application as filed, as appropriate, were furnished.

5. Additional comments:

WRITTEN OPINION OF THE INTERNATIONAL SEARCHING AUTHORITY

International application No.

PCT/IB2013/002377

Box No. II Priority

1. [X] The validity of the priority claim has not been considered because the International Searching Authority does not have in its possession a copy of the earlier application whose priority has been claimed or, where required, a translation of that earlier application. This opinion has nevertheless been established on the assumption that the relevant date (Rules 43*bis*.1 and 64.1) is the claimed priority date.

2. [ ] This opinion has been established as if no priority had been claimed due to the fact that the priority claim has been found invalid (Rules 43*bis*.1 and 64.1). Thus for the purposes of this opinion, the international filing date indicated above is considered to be the relevant date.

3. Additional observations, if necessary:

WRITTEN OPINION OF THE INTERNATIONAL SEARCHING AUTHORITY	International Application No. PCT/IB2013/002377

Box No. V **Reasoned statement under Rule 43*bis*.1(a)(i) with regard to novelty, inventive step or industrial applicability; citations and explanations supporting such statement**

1. Statement

Novelty (N)	Claims **1-37**	**YES**
	Claims **NONE**	**NO**
Inventive step (IS)	Claims **1-37**	**YES**
	Claims **NONE**	**NO**
Industrial applicability (IA)	Claims **1-37**	**YES**
	Claims **NONE**	**NO**

2. CITATIONS AND EXPLANATIONS:

CITATIONS

D1: US 2006/0237905 A1 (NICELY et al.) 26 October 2006
D2: US 7,811,164 B1 (SLOMIANY et al.) 12 October 2010
D3: US 7,901,281 B2 (BRESLO) 08 March 2011

NOVELTY (N)

Claims 1, 2 and 29 meet the criteria set forth in PCT Article 33(2) for novelty. The cited prior art published before the priority date does not disclose, for example:
a wagering system including at least one wagering device for allowing the placement of a wager of a multi–leg event pool, the wagering system comprising:
a server system controller configured to communicate with the at least one wagering device, said server system controller programmed to:

- initiate a multi-leg event pool by the generation of a game having a series of events, the correct selection of the results of the series of the events results in the award of at least a portion of a jackpot, and accepting wagers on the multi–leg events from players,
- recognize when, after a set number of the events, there remain wagers having the potential of winning the jackpot,
- cause the display of a represtantion of a potion of the game results in a manner that indicates that a jackpot can result based on the outcome of the game,
- generate and cause the display of a full or partial buyout proposal, and
- issue at least one of a payment and a credit to the player if the proposal is accepted.

Appended claims 3-28 and 30-37 add further features to those defined in claim 1, 2 and 29, and are therefore also novel.

Therefore, the subject matter of these claims is new and meets the requirements of Article 33(2) of the PCT with regard to novelty.

INVENTIVE STEP (IS)

Claims 1, 2 and 29 meet the criteria set out in PCT Article 33(3) with regard to the requirement of inventive step because the cited prior art does not obviously suggest to a person skilled in the art:

a wagering system including at least one wagering device for allowing the placement of a wager of a multi–leg event pool, the wagering system comprising:
a server system controller configured to communicate with the at least one wagering device, said server system controller programmed to:

- initiate a multi-leg event pool by the generation of a game having a series of events, the correct selection of the results of the series of the events results in the award of at least a portion of a jackpot, and accepting wagers on the multi–leg events from players,
- recognize when, after a set number of the events, there remain wagers having the potential of winning the jackpot,
- cause the display of a represtantion of a potion of the game results in a manner that indicates that a jackpot can result based on the outcome of the game,
- generate and cause the display of a full or partial buyout proposal, and

- issue at least one of a payment and a credit to the player if the proposal is accepted.

Claims 3-28 and 30-37 embody further aspects of the inventive concept and therefore also meet the requirements of Article 33(3) of the PCT.

Therefore, the subject matter of these claims is not obvious and meets the requirements of Article 33(3) of the PCT with regard to inventive step.

INDUSTRIAL APPLICABILITY (IA)

The invention defined in the claims 1-37 is considered to meet the requirements of industrial applicability under Article 33(4) of the PCT because it can be made by, or used in, industry.

E Category Document/s listed in Box VI:

There is a document(s) listed as an E category document in Box VI because it:

- discloses subject matter that is of particular relevance to this application and
- is an earlier application or patent but published on or after the international filing date of this application

Under the PCT, only documents published before the priority date of the instant application can deprive the claims of that application of novelty.

However, the relevance of a document published after the priority date of the application under consideration is dependent on national law in individual countries.

E category document/s may become significant in the National Phase.

WRITTEN OPINION OF THE INTERNATIONAL SEARCHING AUTHORITY **Box No. VI** **Certain documents cited**	International Application No. **PCT/IB2013/002377**

1. Certain published documents (Rules 43*bis*.1 and 70.10)

Application No. Patent No.	Publication date *(day/month/year)*	Filing date *(day/month/year)*	Priority date (valid claim) *(day/month/year)*
E : US 8,602,884 B1	10 December 2013	06 September 2012	06 September 2012

See Supplemental Box for Details

2. Non-written disclosures (Rules 43*bis*.1 and 70.9)

Kind of non-written disclosure	Date of non-written disclosure *(day/month/year)*	Date of written disclosure referring to non-written disclosure *(day/month/year)*

Form PCT/ISA/237 (Box VI) (July 2011)

Continuation of: **Box VI**

It would appear the present application derives basis from the cited document. The present application has a priority date of 2 August 2013 and an international application date of 19 August 2013, while the cited document claims priority 6 of September 2012.

Hence, this document may be considered relevant in certain jurisdictions.

PATENT COOPERATION TREATY

RECEIVED
APR 29 2014
IP DEPT.

From the INTERNATIONAL SEARCHING AUTHORITY

PCT

NOTIFICATION OF TRANSMITTAL OF THE INTERNATIONAL SEARCH REPORT AND THE WRITTEN OPINION OF THE INTERNATIONAL SEARCHING AUTHORITY, OR THE DECLARATION

(PCT Rule 44.1)

To:
Taufer, Paul A.
DLA PIPER US LLP
One Liberty Place
1650 Market Street Suite 4900
Philadelphia PA 19103
ETATS-UNIS D'AMERIQUE

Date of mailing *(day/month/year)*	24 April 2014 (24-04-2014)
Applicant's or agent's file reference COB-13-1044CIP2-WO	**FOR FURTHER ACTION** See paragraphs 1 and 4 below
International application No. PCT/IB2013/002962	International filing date *(day/month/year)* 20 August 2013 (20-08-2013)
Applicant DIOGENES LIMITED	Claim Amendments due 6/24/14

KS.

1. [X] The applicant is hereby notified that the international search report and the written opinion of the International Searching Authority have been established and are transmitted herewith.

Filing of amendments and statement under Article 19:
The applicant is entitled, if he so wishes, to amend the claims of the International Application (see Rule 46):

When? The time limit for filing such amendments is normally two months from the date of transmittal of the International Search Report.

Where? Directly to the International Bureau of WIPO, 34 chemin des Colombettes 1211 Geneva 20, Switzerland, Fascimile No.: (41-22) 338.82.70

For more detailed instructions, see *PCT Applicant's Guide*, International Phase, paragraphs 9.004 - 9.011.

2. [ ] The applicant is hereby notified that no international search report will be established and that the declaration under Article 17(2)(a) to that effect and the written opinion of the International Searching Authority are transmitted herewith.

3. [ ] **With regard to any protest** against payment of (an) additional fee(s) under Rule 40.2, the applicant is notified that:

[ ] the protest together with the decision thereon has been transmitted to the International Bureau together with any request to forward the texts of both the protest and the decision thereon to the designated Offices.

[ ] no decision has been made yet on the protest; the applicant will be notified as soon as a decision is made.

4. **Reminders**

The applicant may submit comments on an informal basis on the written opinion of the International Searching Authority to the International Bureau. The International Bureau will send a copy of such comments to all designated Offices unless an international preliminary examination report has been or is to be established. Following the expiration of 30 months from the priority date, these comments will also be made available to the public.

Shortly after the expiration of **18 months** from the priority date, the international application will be published by the International Bureau. If the applicant wishes to avoid or postpone publication, a notice of withdrawal of the international application, or of the priority claim, must reach the International Bureau before completion of the technical preparations for international publication (Rules 90*bis*.1 and 90*bis*.3).

Within **19 months** from the priority date, but only in respect of some designated Offices, a demand for international preliminary examination must be filed if the applicant wishes to postpone the entry into the national phase **until 30 months** from the priority date (in some Offices even later); otherwise, the applicant must, **within 20 months** from the priority date, perform the prescribed acts for entry into the national phase before those designated Offices.

In respect of other designated Offices, the time limit of **30 months** (or later) will apply even if no demand is filed within 19 months.

For details about the applicable time limits, Office by Office, see www.wipo.int/pct/en/texts/time_limits.html and the *PCT Applicant's Guide*, National Chapters.

Name and mailing address of the International Searching Authority	Authorized officer
European Patent Office, P.B. 5818 Patentlaan 2 NL-2280 HV Rijswijk Tel. (+31-70) 340-2040 Fax: (+31-70) 340-3016	GATINET, Bruno Tel: +31 (0)70 340-2181

Form PCT/ISA/220 (July 2010)

\ . .TENT COOPERATION TREATY

PCT

INTERNATIONAL SEARCH REPORT

(PCT Article 18 and Rules 43 and 44)

Applicant's or agent's file reference COB-13-1044CIP2-WO	**FOR FURTHER ACTION**	see Form PCT/ISA/220 as well as, where applicable, item 5 below.
International application No. PCT/IB2013/002962	International filing date *(day/month/year)* 20 August 2013 (20-08-2013)	(Earliest) Priority Date *(day/month/year)* 6 September 2012 (06-09-2012)
Applicant DIOGENES LIMITED		

This international search report has been prepared by this International Searching Authority and is transmitted to the applicant according to Article 18. A copy is being transmitted to the International Bureau.

This international search report consists of a total of 3 sheets.

[X] It is also accompanied by a copy of each prior art document cited in this report.

1. **Basis of the report**
   a. With regard to the **language**, the international search was carried out on the basis of:
      [X] the international application in the language in which it was filed
      [ ] a translation of the international application into _____, which is the language of a translation furnished for the purposes of international search (Rules 12.3(a) and 23.1(b))
   b. [ ] This international search report has been established taking into account the **rectification of an obvious mistake** authorized by or notified to this Authority under Rule 91 (Rule 43.6*bis*(a)).
   c. [ ] With regard to any **nucleotide and/or amino acid sequence** disclosed in the international application, see Box No. I.
2. [ ] **Certain claims were found unsearchable** (See Box No. II)
3. [ ] **Unity of invention is lacking** (see Box No III)
4. With regard to the **title**,
   [X] the text is approved as submitted by the applicant
   [ ] the text has been established by this Authority to read as follows:
5. With regard to the **abstract**,
   [X] the text is approved as submitted by the applicant
   [ ] the text has been established, according to Rule 38.2, by this Authority as it appears in Box No. IV. The applicant may, within one month from the date of mailing of this international search report, submit comments to this Authority
6. With regard to the **drawings**,
   a. the figure of the **drawings** to be published with the abstract is Figure No. 1
      [X] as suggested by the applicant
      [ ] as selected by this Authority, because the applicant failed to suggest a figure
      [ ] as selected by this Authority, because this figure better characterizes the invention
   b. [ ] none of the figures is to be published with the abstract

Form PCT/ISA/210 (first sheet) (July 2009)

INTERNATIONAL SEARCH REPORT

International application No
PCT/IB2013/002962

A. CLASSIFICATION OF SUBJECT MATTER
INV. G07F17/32 G06Q50/34
ADD.

According to International Patent Classification (IPC) or to both national classification and IPC

B. FIELDS SEARCHED

Minimum documentation searched (classification system followed by classification symbols)
G06Q G07F

Documentation searched other than minimum documentation to the extent that such documents are included in the fields searched

Electronic data base consulted during the international search (name of data base and, where practicable, search terms used)

EPO-Internal

C. DOCUMENTS CONSIDERED TO BE RELEVANT

Category*	Citation of document, with indication, where appropriate, of the relevant passages	Relevant to claim No.
L	EPO: "Mitteilung des Europäischen Patentamts vom 1. Oktober 2007 über Geschäftsmethoden = Notice from the European Patent Office dated 1 October 2007 concerning business methods = Communiqué de l'Office européen des brevets,en date du 1er octobre 2007, concernant les méthodes dans le domaine des activités", JOURNAL OFFICIEL DE L'OFFICE EUROPEEN DES BREVETS.OFFICIAL JOURNAL OF THE EUROPEAN PATENT OFFICE.AMTSBLATTT DES EUROPAEISCHEN PATENTAMTS, OEB, MUNCHEN, DE, vol. 30, no. 11, 1 November 2007 (2007-11-01), pages 592-593, XP007905525, ISSN: 0170-9291 The claimed subject matter, with due regard to the description and drawings, relates to processes comprised in the list	1-30

[X] Further documents are listed in the continuation of Box C. [ ] See patent family annex.

* Special categories of cited documents :

"A" document defining the general state of the art which is not considered to be of particular relevance

"E" earlier application or patent but published on or after the international filing date

"L" document which may throw doubts on priority claim(s) or which is cited to establish the publication date of another citation or other special reason (as specified)

"O" document referring to an oral disclosure, use, exhibition or other means

"P" document published prior to the international filing date but later than the priority date claimed

"T" later document published after the international filing date or priority date and not in conflict with the application but cited to understand the principle or theory underlying the invention

"X" document of particular relevance; the claimed invention cannot be considered novel or cannot be considered to involve an inventive step when the document is taken alone

"Y" document of particular relevance; the claimed invention cannot be considered to involve an inventive step when the document is combined with one or more other such documents, such combination being obvious to a person skilled in the art

"&" document member of the same patent family

Date of the actual completion of the international search	Date of mailing of the international search report
14 April 2014	24/04/2014
Name and mailing address of the ISA/ European Patent Office, P.B. 5818 Patentlaan 2 NL - 2280 HV Rijswijk Tel. (+31-70) 340-2040, Fax: (+31-70) 340-3016	Authorized officer Bassanini, Anna

1

Form PCT/ISA/210 (second sheet) (April 2005)

DraftKings, Ex. 1002, p. 287

C(Continuation). DOCUMENTS CONSIDERED TO BE RELEVANT

Category*	Citation of document, with indication, where appropriate, of the relevant passages	Relevant to claim No.
	of subject matter and activities for which no search is required under Rule 39 PCT. The only identifiable technical aspects of the claimed invention relate to the use of conventional, general-purpose data processing technology for processing data of an inherently non-technical nature. The information technology employed is considered to have been generally known as it was widely available to everyone at the date of filing/priority of the present application. The notoriety of such prior art cannot reasonably be contested. No documentary evidence was therefore considered required. -----	

1

PATENT COOPERATION TREATY

From the
INTERNATIONAL SEARCHING AUTHORITY

To:

see form PCT/ISA/220

PCT

WRITTEN OPINION OF THE INTERNATIONAL SEARCHING AUTHORITY

(PCT Rule 43*bis*.1)

Date of mailing
(day/month/year) see form PCT/ISA/210 (second sheet)

Applicant's or agent's file reference
see form PCT/ISA/220

FOR FURTHER ACTION
See paragraph 2 below

International application No.	International filing date *(day/month/year)*	Priority date *(day/month/year)*
PCT/IB2013/002962	20.08.2013	06.09.2012

International Patent Classification (IPC) or both national classification and IPC
INV. G07F17/32 G06Q50/34

Applicant
DIOGENES LIMITED

1. This opinion contains indications relating to the following items:

- ☒ Box No. I Basis of the opinion
- ☐ Box No. II Priority
- ☐ Box No. III Non-establishment of opinion with regard to novelty, inventive step and industrial applicability
- ☐ Box No. IV Lack of unity of invention
- ☒ Box No. V Reasoned statement under Rule 43*bis*.1(a)(i) with regard to novelty, inventive step and industrial applicability; citations and explanations supporting such statement
- ☐ Box No. VI Certain documents cited
- ☐ Box No. VII Certain defects in the international application
- ☐ Box No. VIII Certain observations on the international application

2. **FURTHER ACTION**

If a demand for international preliminary examination is made, this opinion will usually be considered to be a written opinion of the International Preliminary Examining Authority ("IPEA") except that this does not apply where the applicant chooses an Authority other than this one to be the IPEA and the chosen IPEA has notifed the International Bureau under Rule 66.1*bis*(b) that written opinions of this International Searching Authority will not be so considered.

If this opinion is, as provided above, considered to be a written opinion of the IPEA, the applicant is invited to submit to the IPEA a written reply together, where appropriate, with amendments, before the expiration of 3 months from the date of mailing of Form PCT/ISA/220 or before the expiration of 22 months from the priority date, whichever expires later.

For further options, see Form PCT/ISA/220.

Name and mailing address of the ISA:	Date of completion of this opinion	Authorized Officer
European Patent Office P.B. 5818 Patentlaan 2 NL-2280 HV Rijswijk - Pays Bas Tel. +31 70 340 - 2040 Fax: +31 70 340 - 3016	see form PCT/ISA/210	Bassanini, Anna Telephone No. +31 70 340-2036

Form PCT/ISA/237 (Cover Sheet) (July 2009)

Box No. I Basis of the opinion

1. With regard to the **language**, this opinion has been established on the basis of:

   ☒ the international application in the language in which it was filed

   ☐ a translation of the international application into , which is the language of a translation furnished for the purposes of international search (Rules 12.3(a) and 23.1 (b)).

2. ☐ This opinion has been established taking into account the **rectification of an obvious mistake** authorized by or notified to this Authority under Rule 91 (Rule 43bis.1(a))

3. With regard to any **nucleotide and/or amino acid sequence** disclosed in the international application, this opinion has been established on the basis of a sequence listing filed or furnished:

   a. (means)

   ☐ on paper

   ☐ in electronic form

   b. (time)

   ☐ in the international application as filed

   ☐ together with the international application in electronic form

   ☐ subsequently to this Authority for the purposes of search

4. ☐ In addition, in the case that more than one version or copy of a sequence listing has been filed or furnished, the required statements that the information in the subsequent or additional copies is identical to that in the application as filed or does not go beyond the application as filed, as appropriate, were furnished.

5. Additional comments:

Box No. V Reasoned statement under Rule 43*bis*.1(a)(i) with regard to novelty, inventive step or industrial applicability; citations and explanations supporting such statement

1. Statement

Novelty (N)	Yes:	Claims	1-30
	No:	Claims	
Inventive step (IS)	Yes:	Claims	
	No:	Claims	1-30
Industrial applicability (IA)	Yes:	Claims	1-30
	No:	Claims	

2. Citations and explanations

   see separate sheet

Re Item V

Reasoned statement with regard to novelty, inventive step or industrial applicability; citations and explanations supporting such statement

1 The claimed subject matter, with due regard to the description and drawings, relates to processes comprised in the list of subject matter and activities for which no search is required under Rule 39 PCT.

The only identifiable technical aspects of the claimed invention are deemed to relate to the use of conventional, general-purpose data processing technology. The information technology employed is considered to have been generally known as it was widely available to everyone at the date of priority of the present application. The notoriety of such prior art cannot reasonably be contested, and no documentary evidence was therefore considered required.

2 Claims 1-30 of the application, although not completely devoid of technical character, are thus regarded as merely specifying commonplace features relating to a technological implementation of subject matter for which no search is required under Rule 39 PCT, without involving an inventive step (Article 33(3) PCT). No technical solution defined in response to a problem could be identified within the content of the application as originally filed. Any problems which are addressed do not appear to require a technical, but rather an administrative or organisational, i.e. business, solution. Whilst the implementation of such solutions may include the use of generic technical features, these merely serve their well known functions as would be recognised by the skilled person in the technical field under consideration.

2.1 The subject-matter of this application relates to wagering. This is *per se* a non-technical aspect, for which no search is required under Rule 39 PCT.

2.2 The problem being addressed resides in creating new wagering products to generate and maintain consumer interest (see the description, page 1, l. 31-32). This problem is also non technical.

2.3 The solution proposed by the present application consists of creating a unique betting product where players make selections in a number of different "legs" including a variety of events. Players winning at least one leg are eligible to win a jackpot. Before the multi-wagering event is completed, buy-out offers to the players who are eligible to win the jackpot can be initiated. If those players accept, they will not be eligible to win a final jackpot. Partial buy-out offers can

also be made, whereby accepting players will be eligible to win portions of the jackpots. This solution is *per se* a gaming and business, i.e. non-technical scheme.

2.4 The implementation of this solution as proposed in the present application is a mere automation of the above mentioned non-technical scheme. The person skilled in the art, made aware of the administrative method, guided by the constraints implied by this method, would implement it without the exercise of an inventive activity. No technical problem has been convincingly laid out and none is apparent to the person skilled in the art from reading the current application. Therefore, the problem dealt with is non-technical. The only technical aspect that is present is the use of a computer system for implementing the basic administrative task. However, the feature of executing this method on a computer system does not go beyond the basic computer functions associated with the implementation of any administrative task on a computer system which are standard technology and form part of the general knowledge of the skilled person in the art. When analysing the application, the examiner was unable to discover any technical details that go beyond mentioning at a very high level the presence of a networked computer system and ordinary data processing. It is also noted that no further technical effect can be seen in the implementation of this administrative method.

2.5 The defined subject-matter accordingly lacks inventive step, as no technical solution to a realised technical problem has been proposed and no technical effect or result which would be unexpected or surprising to the person skilled in the art is apparent.

2.6 The person skilled in the art, with general knowledge of the technical field and normal access to examples and textbooks, would apply the measures as described in the present application and defined in its claims without the use of inventive skill to arrive at the desired result. As noted in section 1 of this communication, the examiner does not find it necessary at present to refer to any particular art in support of this view due to the paucity of technical definition going beyond the everyday for the person skilled in the technical art.

Bitte beachten Sie, dass angeführte Nichtpatentliteratur (wie z. B. wissenschaftliche oder technische Dokumente) je nach geltendem Recht dem Urheberrechtsschutz und/oder anderen Schutzarten für schriftliche Werke unterliegen könnte. Die Vervielfältigung urheberrechtlich geschützter Texte, ihre Verwendung in anderen elektronischen oder gedruckten Publikationen und ihre Weitergabe an Dritte ist ohne ausdrückliche Zustimmung des Rechtsinhabers nicht gestattet.

Veuillez noter que les ouvrages de la littérature non-brevets qui sont cités, par exemple les documents scientifiques ou techniques, etc., peuvent être protégés par des droits d'auteur et/ou toute autre protection des écrits prévue par les législations applicables. Les textes ainsi protégés ne peuvent être reproduits ni utilisés dans d'autres publications électroniques ou imprimées, ni rediffusés sans l'autorisation expresse du titulaire du droit d'auteur.

Please be aware that cited works of non-patent literature such as scientific or technical documents or the like may be subject to copyright protection and/or any other protection of written works as appropriate based on applicable laws. Copyrighted texts may not be copied or used in other electronic or printed publications or re-distributed without the express permission of the copyright holder.

XS CPRTENFRDE

BNSDOCID: <XS_____2006100103CF_I_>

XP007905525

Mitteilung des Europäischen Patentamts vom 1. Oktober 2007 über Geschäftsmethoden[1]

PCT

Das EPA möchte die Anmelder daran erinnern, dass es gemäß Regel 39.1 iii) PCT keine internationale Recherche für eine Anmeldung durchführt, wenn und soweit der Anmeldungsgegenstand lediglich eine Geschäftsmethode betrifft und keinerlei offensichtlichen technischen Charakter aufweist.

In solchen Fällen wird in einer Erklärung festgestellt, dass nach Artikel 17 (2) PCT kein internationaler Recherchenbericht erstellt wird.

Dies kann durchaus Folgen für das Verfahren vor dem als IPEA tätigen EPA haben, weil sich die internationale vorläufige Prüfung nicht auf Ansprüche erstrecken muss, die sich auf Erfindungen beziehen, für die kein internationaler Recherchenbericht erstellt worden ist (Regel 66.1 e) PCT). Ferner ist das EPA

[1] Diese Mitteilung ersetzt die vorhergehende Mitteilung vom 26. März 2002 (ABl. EPA 2002, 260).

Notice from the European Patent Office dated 1 October 2007 concerning business methods[1]

PCT

The EPO wishes to remind applicants that pursuant to Rule 39.1(iii) PCT it will not carry out an international search on an application to the extent that its subject matter relates to no more than a method of doing business, in the absence of any apparent technical character.

In these cases a declaration will be issued that no international search report will be established pursuant to Article 17(2) PCT.

This may well have consequences for the procedure before the EPO as IPEA in view of the fact that claims relating to inventions for which no international search report has been established need not be the subject of international preliminary examination (Rule 66.1(e) PCT). Furthermore, the EPO is not required to

[1] This Notice replaces the previous Notice dated 26 March 2002 (OJ EPO 2002, 260).

Communiqué de l'Office européen des brevets, en date du 1er octobre 2007, concernant les méthodes dans le domaine des activités économiques[1]

PCT

L'OEB rappelle aux déposants que conformément à la règle 39.1iii) PCT, il n'effectuera pas de recherche internationale pour une demande dans la mesure où celle-ci a uniquement pour objet une méthode en vue de faire des affaires, sans aucun caractère technique apparent.

En pareil cas, l'Office déclarera et notifiera au déposant qu'un rapport de recherche internationale ne sera pas établi, conformément à l'article 17(2) PCT.

Une telle notification pourra fort bien avoir des conséquences pour la procédure devant l'OEB agissant en tant qu'IPEA, puisqu'il n'est pas nécessaire de procéder à un examen préliminaire international pour les revendications relatives à des inventions pour lesquelles aucun rapport de recherche interna-

[1] Le présent communiqué remplace le communiqué précédent en date du 26 mars 2002 (JO OEB 2002, 260).

BNSDOCID: <XP_____7905525A__I_>

DraftKings, Ex. 1002, p. 301

nicht verpflichtet, eine internationale vorläufige Prüfung einer Anmeldung durchzuführen, wenn der Anmeldungsgegenstand eine Geschäftsmethode betrifft (Regel 67.1 iii) PCT).

In Fällen, in denen der beanspruchte Gegenstand technische Mittel umfasst, erstellt das EPA einen Recherchenbericht. Sind die verwendeten technischen Mittel so konventionell, dass sie am Anmeldetag jedermann ohne Weiteres zugänglich waren und aufgrund ihrer Bekanntheit keine Beweisunterlagen für notwendig erachtet werden, wird im Recherchenbericht kein Dokument angeführt. In den Recherchenbericht wird eine Erklärung aufgenommen, der zufolge diese technischen Mittel als so banal betrachtet werden, dass sich die Angabe von Unterlagen erübrigt.

EPÜ

Darüber hinaus möchte das EPA die Anmelder daran erinnern, dass Geschäftsmethoden als solche nach Artikel 52 (2) c) und (3) EPÜ vom Patentschutz ausgeschlossen sind. Zu Ansprüchen in europäischen Patentanmeldungen, die sich auf nichts weiter als solche Methoden beziehen, wird keine Recherche durchgeführt. Eine Erklärung, in der dies festgestellt wird, tritt an die Stelle des europäischen Recherchenberichts bzw. des ergänzenden Recherchenberichts gemäß Regel 45 EPÜ[2].

In Fällen, in denen der beanspruchte Gegenstand technische Mittel umfasst, erstellt das EPA einen Recherchenbericht oder einen Teilrecherchenbericht. Sind die verwendeten technischen Mittel so konventionell, dass sie am Anmeldetag jedermann ohne Weiteres zugänglich waren und aufgrund ihrer Bekanntheit keine Beweisunterlagen für notwendig erachtet werden, wird im Recherchenbericht kein Dokument angeführt. In den Recherchenbericht wird eine Erklärung aufgenommen, der zufolge diese technischen Mittel als so banal betrachtet werden, dass sich die Angabe von Unterlagen erübrigt.

[2] Entspricht Regel 63 im EPÜ 2000.

carry out an international preliminary examination on an application if its subject matter is a method of doing business (Rule 67.1(iii) PCT).

In cases where the claimed subject matter involves technical means the EPO will issue a search report. Where the employed technical means are so conventional that they were widely available and no documentary evidence is considered required because of their notoriety, no document will be cited in the search report. A statement will be inserted in the search report indicating that these technical means are considered to be so commonplace that no citation is considered necessary.

EPC

The EPO also wishes to remind applicants that methods of doing business, as such, are excluded from patentability pursuant to Article 52(2)(c) and (3) EPC. Claims of European patent applications which relate to no more than such methods will not be searched. A declaration to this effect will take the place of the European or supplementary search report pursuant to Rule 45 EPC[2].

In cases where the claimed subject matter involves technical means the EPO will issue a search report or partial search report. Where the employed technical means are so conventional that they were widely available to everyone at the date of filing and no documentary evidence is considered required because of their notoriety, no document will be cited in the search report. A statement will be inserted in the search report indicating that these technical means are considered to be so commonplace that no citation is considered necessary.

[2] Corresponds to Rule 63 in EPC 2000.

tionale n'a été établi (règle 66.1e) PCT). En outre, l'OEB n'a pas l'obligation de procéder à l'examen préliminaire international à l'égard d'une demande dont l'objet est une méthode en vue de faire des affaires (règle 67.1iii) PCT).

L'OEB établira un rapport de recherche dans les cas où l'objet revendiqué implique des moyens techniques. Si les moyens techniques sont courantes au point d'avoir été largement accessibles à tout un chacun à la date de dépôt, et si aucun moyen de preuve n'est considéré comme requis en raison de leur notoriété, aucun document ne sera cité dans le rapport de recherche. Une déclaration figurera dans le rapport de recherche, selon laquelle ces moyens techniques sont considérées comme étant si banales qu'aucune citation n'est tenue pour nécessaire.

CBE

L'OEB voudrait également rappeler aux déposants que les méthodes dans le domaine des activités économiques sont en tant que telles exclues de la brevetabilité conformément à l'article 52(2)c) et (3) CBE. Les revendications qui figurent dans les demandes de brevet européen et qui ont uniquement trait à de telles méthodes ne feront pas l'objet d'une recherche. Une déclaration en ce sens remplacera le rapport de recherche européenne ou le rapport de recherche complémentaire, conformément à la règle 45 CBE[2].

L'OEB établira un rapport de recherche ou un rapport partiel de recherche dans les cas où l'objet revendiqué implique des moyens techniques. Si les moyens techniques sont courantes au point d'avoir été largement accessibles à tout un chacun à la date de dépôt, et si aucun moyen de preuve n'est considéré comme requis en raison de leur notoriété, aucun document ne sera cité dans le rapport de recherche. Une déclaration figurera dans le rapport de recherche, selon laquelle ces moyens techniques sont considérées comme étant si banales qu'aucune citation n'est tenue pour nécessaire.

[2] Correspond à la règle 63 dans la CBE 2000.

DraftKings, Ex. 1002, p. 302

Electronic Patent Application Fee Transmittal

Application Number:	
Filing Date:	
Title of Invention:	WAGERING APPARATUS, METHODS AND SYSTEMS
First Named Inventor/Applicant Name:	BERNARD J. MARANTELLI
Filer:	Paul A. Taufer/Nancy Nunez
Attorney Docket Number:	COB-13-1044CIP3-CON

Filed as Small Entity

Utility under 35 USC 111(a) Filing Fees

Description	Fee Code	Quantity	Amount	Sub-Total in USD($)
Basic Filing:				
Utility filing Fee (Electronic filing)	4011	1	70	70
Utility Search Fee	2111	1	300	300
Utility Examination Fee	2311	1	360	360
Pages:				
Claims:				
Claims in excess of 20	2202	20	40	800
Independent Claims in Excess of 3	2201	1	210	210
Miscellaneous-Filing:				

Description	Fee Code	Quantity	Amount	Sub-Total in USD($)
Petition:				
Patent-Appeals-and-Interference:				
Post-Allowance-and-Post-Issuance:				
Extension-of-Time:				
Miscellaneous:				
			Total in USD ($)	**1740**

Electronic Acknowledgement Receipt

EFS ID:	19004256
Application Number:	14275136
International Application Number:	
Confirmation Number:	9997
Title of Invention:	WAGERING APPARATUS, METHODS AND SYSTEMS
First Named Inventor/Applicant Name:	BERNARD J. MARANTELLI
Customer Number:	35811
Filer:	Paul A. Taufer/Nancy Nunez
Filer Authorized By:	Paul A. Taufer
Attorney Docket Number:	COB-13-1044CIP3-CON
Receipt Date:	12-MAY-2014
Filing Date:	
Time Stamp:	15:10:53
Application Type:	Utility under 35 USC 111(a)

Payment information:

Submitted with Payment	yes
Payment Type	Deposit Account
Payment was successfully received in RAM	$1740
RAM confirmation Number	2274
Deposit Account	502719
Authorized User	

The Director of the USPTO is hereby authorized to charge indicated fees and credit any overpayment as follows:

Charge any Additional Fees required under 37 C.F.R. Section 1.16 (National application filing, search, and examination fees)

Charge any Additional Fees required under 37 C.F.R. Section 1.17 (Patent application and reexamination processing fees)

Charge any Additional Fees required under 37 C.F.R. Section 1.19 (Document supply fees)

Charge any Additional Fees required under 37 C.F.R. Section 1.20 (Post Issuance fees)

Charge any Additional Fees required under 37 C.F.R. Section 1.21 (Miscellaneous fees and charges)

File Listing:

Document Number	Document Description	File Name	File Size(Bytes)/ Message Digest	Multi Part /.zip	Pages (if appl.)
1	Transmittal of New Application	ATL.pdf	99924 8072c8ed2a6084cb23dda9382d39cdc0c75c7d56	no	1
Warnings:					
Information:					
2	Application Data Sheet	ADS.pdf	1265384 0224348792df07cc0b7cb669fc3a7cb3234c9ac9	no	6
Warnings:					
Information:					
3	Power of Attorney	POA.pdf	154271 5c70210b9c89248524d545a87217911d6e714900	no	1
Warnings:					
Information:					
4	Oath or Declaration filed	CombinedDeclarationAndAssignment.pdf	228895 f2ed1e07d5247f735b7e38d00bd84f801fbf8f9f	no	1
Warnings:					
Information:					
5		ApplicationWithDrawings.pdf	6058044 332ab642d9dd00914e48ac8ccd4d6bf89b5be18c	yes	54

Multipart Description/PDF files in .zip description

Document Description	Start	End
Specification	1	40
Claims	41	48
Abstract	49	49
Drawings-only black and white line drawings	50	54

Warnings:

Information:

6		IDS.pdf	175610 802e24260d0617fa896852e18df706e396b48c05	yes	2
	Multipart Description/PDF files in .zip description				
	Document Description		**Start**	**End**	
	Transmittal Letter		1	1	
	Information Disclosure Statement (IDS) Form (SB08)		2	2	
Warnings:					
Information:					
7	Foreign Reference	GB7087.pdf	4161924 ade9cafef40b4afd4fedf25ebac3c19a235efc3c	no	47
Warnings:					
Information:					
8	Other Reference-Patent/App/Search documents	ISRWO.pdf	180388 eedfb340d7ad6fda230af52dd51be07d58022a1d	no	9
Warnings:					
Information:					
9	Other Reference-Patent/App/Search documents	ISRWO2.pdf	980353 d35cdd7cb3fd69755707091c42b3016c6e238661	no	12
Warnings:					
Information:					
10	Other Reference-Patent/App/Search documents	ISRAndWO.pdf	531933 c1c4389d6c3adccbacca937e1fa4587cd8bde2f0	no	20
Warnings:					
Information:					
11	Fee Worksheet (SB06)	fee-info.pdf	38198 b9bd1d7ef3f7274e736877bf1ef48c7b9ef75575	no	2
Warnings:					
Information:					
			Total Files Size (in bytes):	13874924	

This Acknowledgement Receipt evidences receipt on the noted date by the USPTO of the indicated documents, characterized by the applicant, and including page counts, where applicable. It serves as evidence of receipt similar to a Post Card, as described in MPEP 503.

New Applications Under 35 U.S.C. 111
If a new application is being filed and the application includes the necessary components for a filing date (see 37 CFR 1.53(b)-(d) and MPEP 506), a Filing Receipt (37 CFR 1.54) will be issued in due course and the date shown on this Acknowledgement Receipt will establish the filing date of the application.

National Stage of an International Application under 35 U.S.C. 371
If a timely submission to enter the national stage of an international application is compliant with the conditions of 35 U.S.C. 371 and other applicable requirements a Form PCT/DO/EO/903 indicating acceptance of the application as a national stage submission under 35 U.S.C. 371 will be issued in addition to the Filing Receipt, in due course.

New International Application Filed with the USPTO as a Receiving Office
If a new international application is being filed and the international application includes the necessary components for an international filing date (see PCT Article 11 and MPEP 1810), a Notification of the International Application Number and of the International Filing Date (Form PCT/RO/105) will be issued in due course, subject to prescriptions concerning national security, and the date shown on this Acknowledgement Receipt will establish the international filing date of the application.