US006173955B1

(12) **United States Patent**
Perrie et al.

(10) **Patent No.: US 6,173,955 B1**
(45) **Date of Patent: Jan. 16, 2001**

(54) **POKER DICE CASINO GAME METHOD OF PLAY**

(75) Inventors: **Kenneth Allan Perrie**, Groton, CT (US); **Olaf Vancura**, Las Vegas, NV (US)

(73) Assignee: **Mikohn Gaming Corporation**, Las Vegas, NV (US)

(*) Notice: Under 35 U.S.C. 154(b), the term of this patent shall be extended for 0 days.

(21) Appl. No.: **09/218,506**

(22) Filed: **Dec. 22, 1998**

Related U.S. Application Data

(60) Provisional application No. 60/068,625, filed on Dec. 23, 1997, and provisional application No. 60/078,348, filed on Mar. 17, 1998.

(51) **Int. Cl.**[7] **A63F 9/04**

(52) **U.S. Cl.** ..... **273/146**; 273/138; 273/142 R; 463/20

(58) **Field of Search** ..... 273/146, 292, 273/138, 143 R; 463/20

(56) **References Cited**

U.S. PATENT DOCUMENTS

2,881,892	4/1959	Ylinen .	
3,592,473	7/1971	Jernakoff et al. .	
3,659,853	5/1972	Church .	
3,709,499	1/1973	Lukens, Jr. .	
3,791,650	2/1974	Dice .	
4,431,189	2/1984	Wiencek et al. .	
4,506,890	3/1985	Murry .	
4,669,728	6/1987	Carden .	
4,858,931	8/1989	McKechnie .	
4,909,513	3/1990	Kiyono .	
5,031,913	7/1991	Hirosumi et al. .	
5,031,914	7/1991	Rosenthal .	
5,259,616	* 11/1993	Bergmann	273/138 A
5,263,715	11/1993	Matsumoto et al. .	

(List continued on next page.)

FOREIGN PATENT DOCUMENTS

0 426 301 A1	5/1991	(EP) .
0 862 152 A1	9/1998	(EP) .
0 874 337 A1	10/1998	(EP) .
0 875 870 A2	11/1998	(EP) .

OTHER PUBLICATIONS

Fey, Marshall, Slot Machines, 1997, page 75, Liberty Belle, Reno, Nevada.
Marshall Fey, Slot Machines, 1997, Reno, Nevada, p. 75.
John Scarne, Scarne's New Complete Guide to Gambling, 1974, Simon & Schuster, Inc., New York, New York, p. 532.
Yam, Internet, Jul. 23, 1998 (2 pages).
The Canadian Contingent Paintball Club—Liar's Dice Rules, Internet, Jul. 23, 1998 (2 pages).
Yahtzee Score Card, 1982, Milton Bradley Co.
Triple Yahtzee Instructions, 1982, Milton Bradley Company (4 pages).

Primary Examiner—Mark S. Graham
Assistant Examiner—Dolores Collins
(74) *Attorney, Agent, or Firm*—Dorr, Carson, Sloan & Birney, P.C.

(57) **ABSTRACT**

A method for playing a stand-alone and a bonus casino poker dice having X dice, each of the X dice having F faces with a different symbol thereon so as to form a set {S} of symbols on each of the X dice. The method of the present invention includes the steps of placing a wager; rolling the dice; holding none, any, or all of the rolled dice; ending the casino poker dice game when the dice are all held or when re-rolling occurs Y times; paying any winning combinations of symbols based on the placed wager and in response to the step of ending the game; re-rolling the non-held dice when less than all the X dice are held; and repeating various of these steps until the game ends. Variations on this basic method are set forth for stand-alone games, bonus games, used in conjunction with underlying gaming machines, and playing a bonus game of the present invention in parallel with an underlying game so that a number of hands are played.

17 Claims, 7 Drawing Sheets

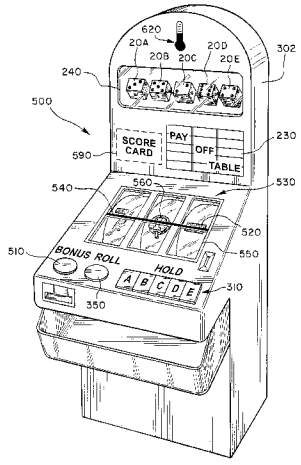

U.S. PATENT DOCUMENTS

5,344,145		9/1994	Chadwick et al. .	
5,362,052		11/1994	Kubatsch .	
5,456,467	*	10/1995	Hoover	273/146
5,556,101		9/1996	Jabro .	
5,573,248		11/1996	Parra et al. .	
5,630,586		5/1997	Lowden .	
5,775,692	*	7/1998	Watts et al.	273/143 R
5,791,649	*	8/1998	DiSandro	273/243
5,848,932	*	12/1998	Adams	463/20
5,890,962	*	4/1999	Takemoto	463/20
6,012,982	*	1/2000	Piechowiak et al.	463/16

* cited by examiner

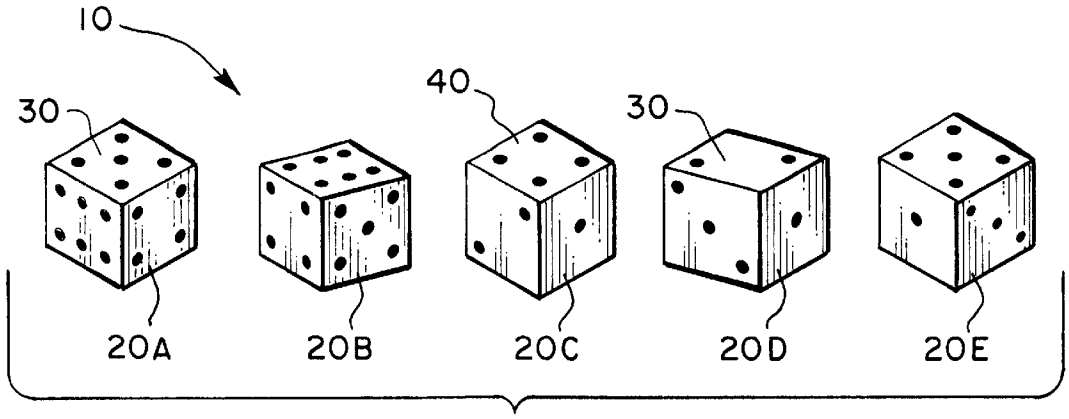

Fig. 1
(Prior Art)

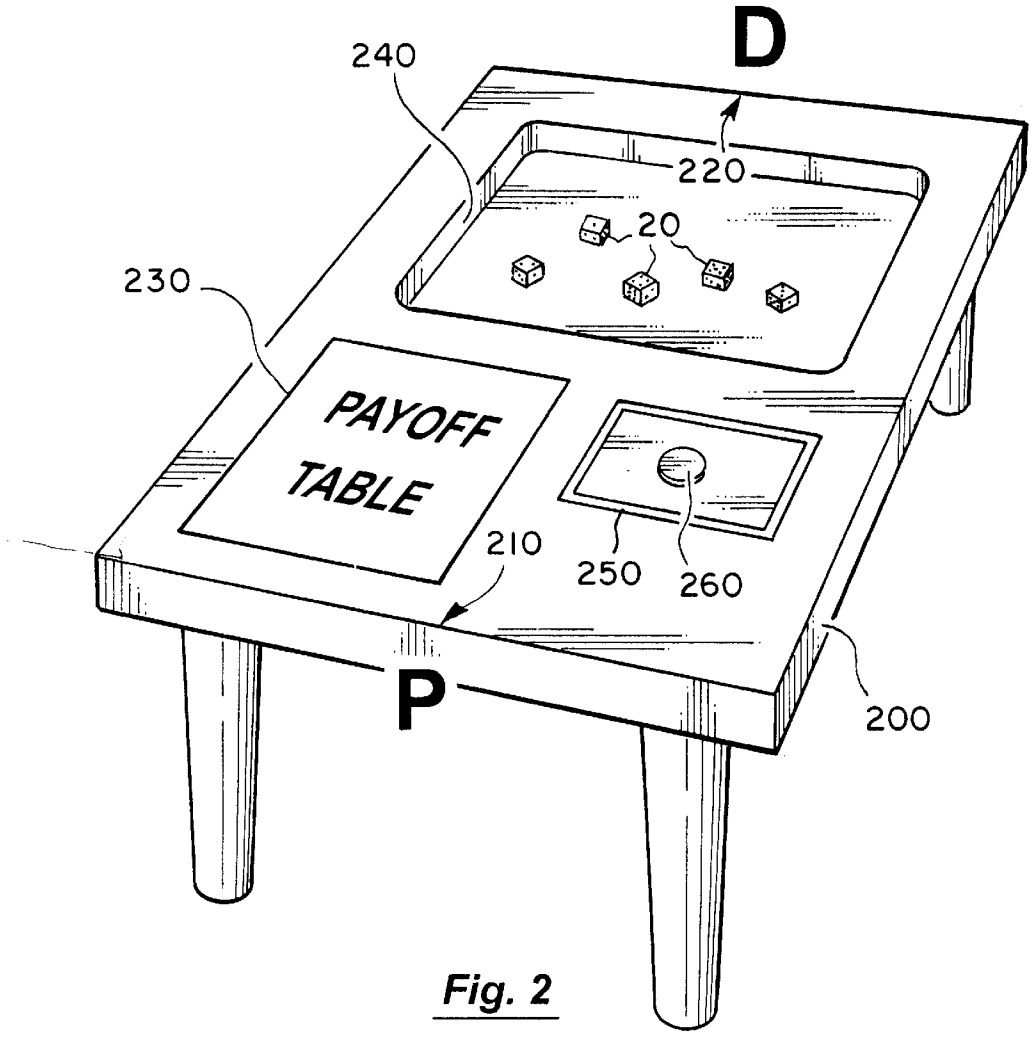

Fig. 2

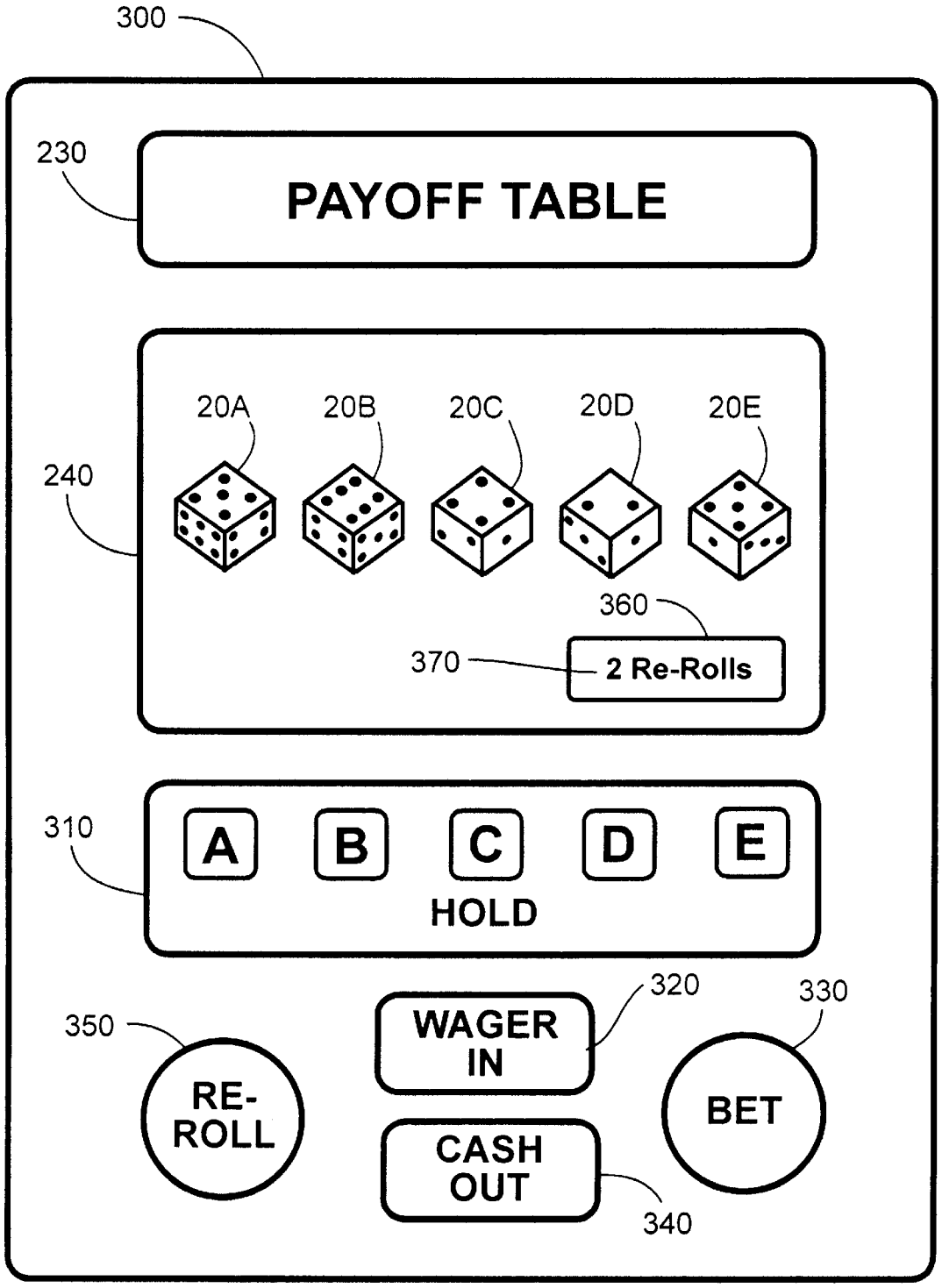
300
230
PAYOFF TABLE
240
20A
20B
20C
20D
20E
360
370
2 Re-Rolls
310
A
B
C
D
E
HOLD
350
RE-ROLL
WAGER IN
320
330
BET
CASH OUT
340

Fig. 3

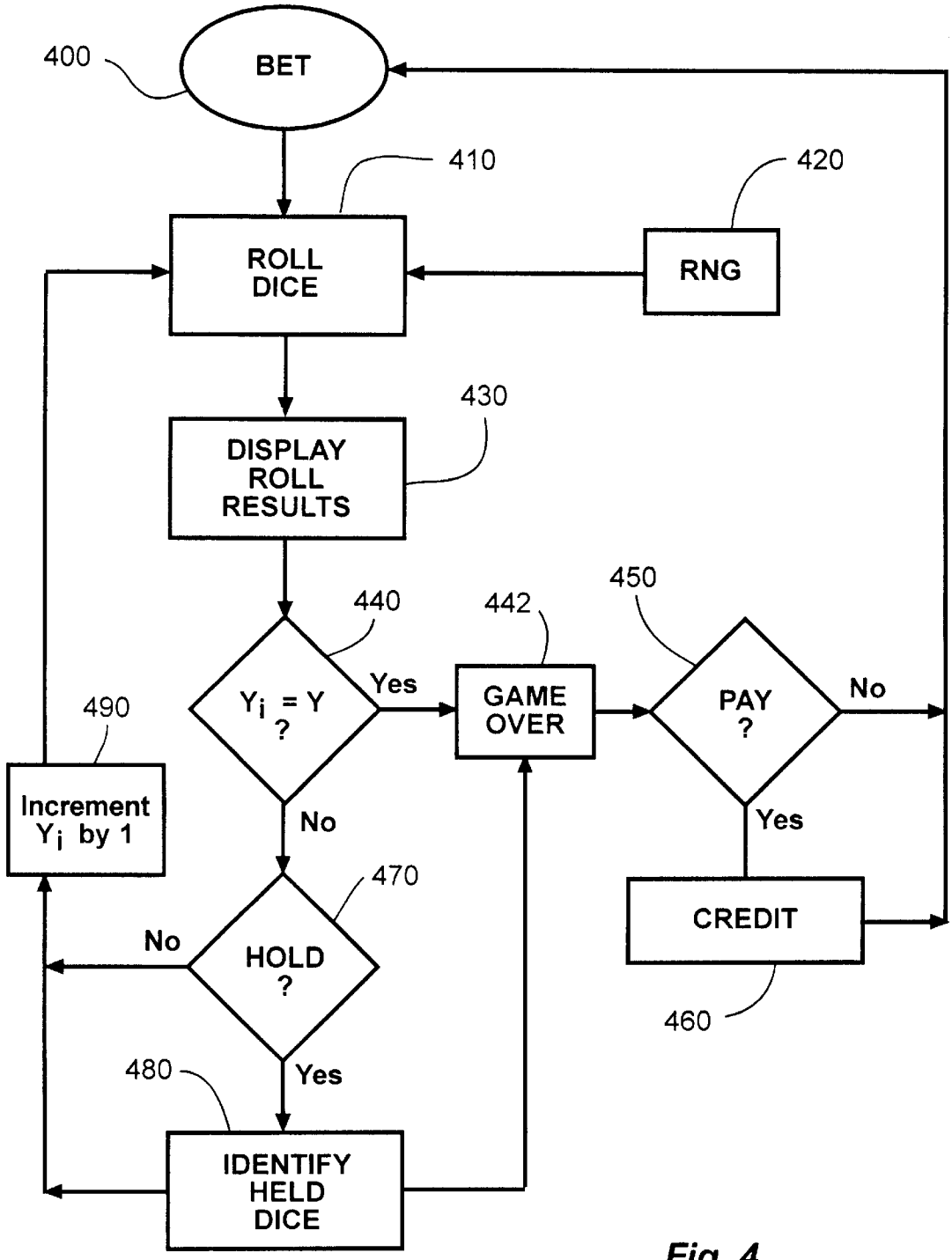
400
BET
410
ROLL DICE
420
RNG
430
DISPLAY ROLL RESULTS
440
Y_i = Y ?
Yes
No
442
GAME OVER
450
PAY ?
No
Yes
CREDIT
460
490
Increment Y_i by 1
470
HOLD ?
No
Yes
480
IDENTIFY HELD DICE

Fig. 4

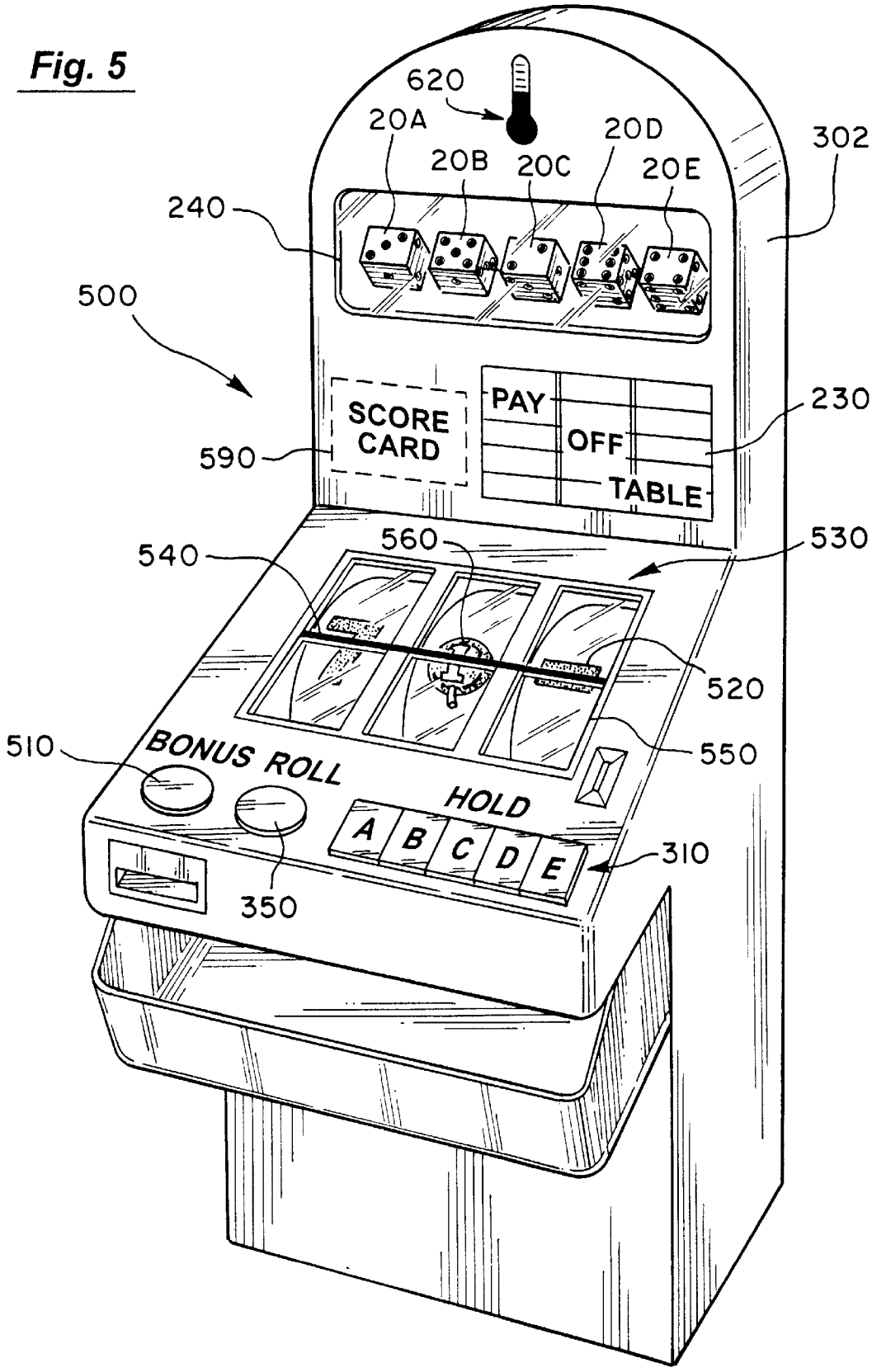
Fig. 5
620
20A
20B
20C
20D
20E
302
240
500
SCORE CARD
PAY OFF TABLE
230
590
540
560
530
520
510
BONUS ROLL
HOLD
A B C D E
550
310
350

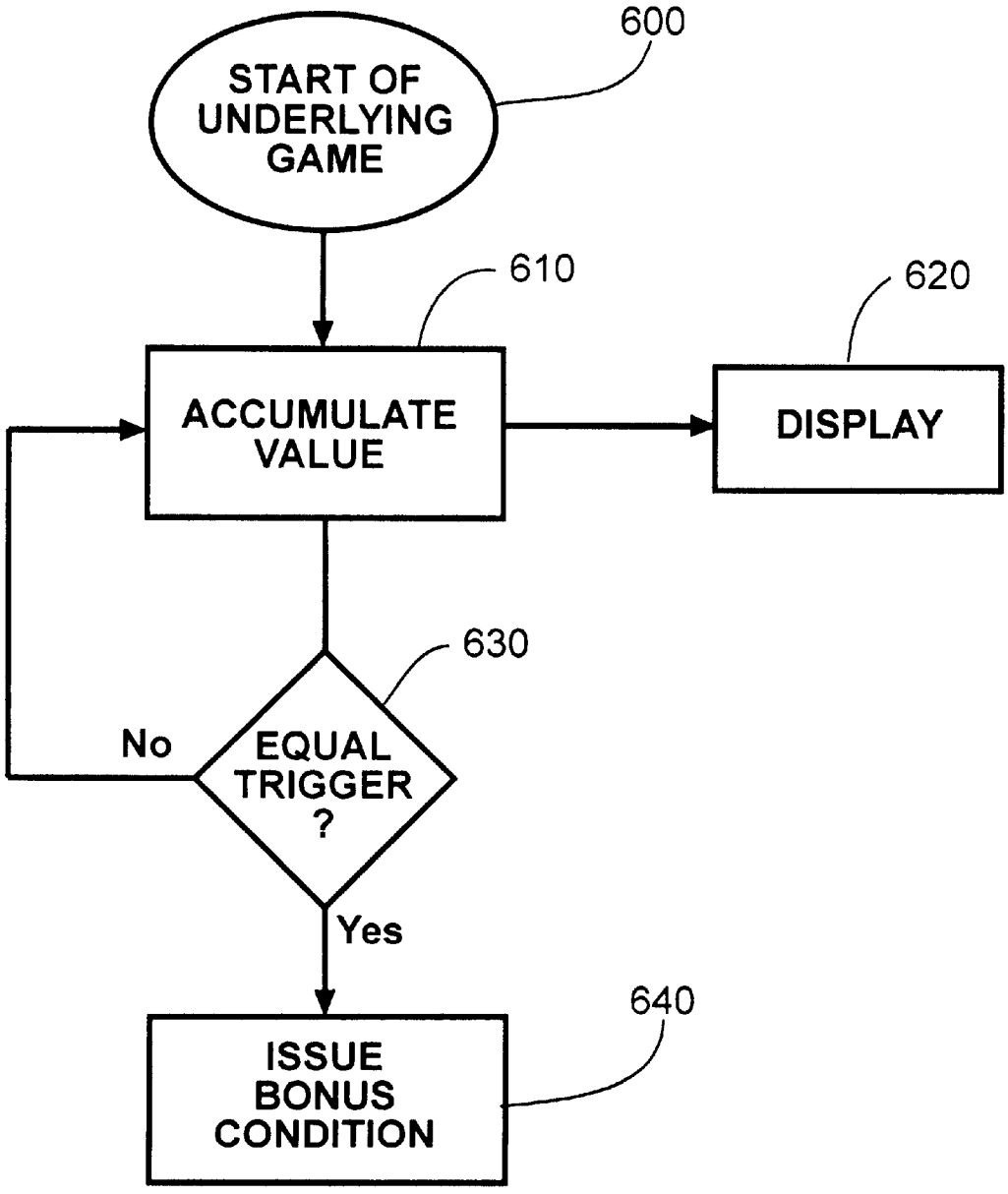
600
START OF UNDERLYING GAME
610
ACCUMULATE VALUE
620
DISPLAY
630
EQUAL TRIGGER ?
No
Yes
640
ISSUE BONUS CONDITION

Fig. 6

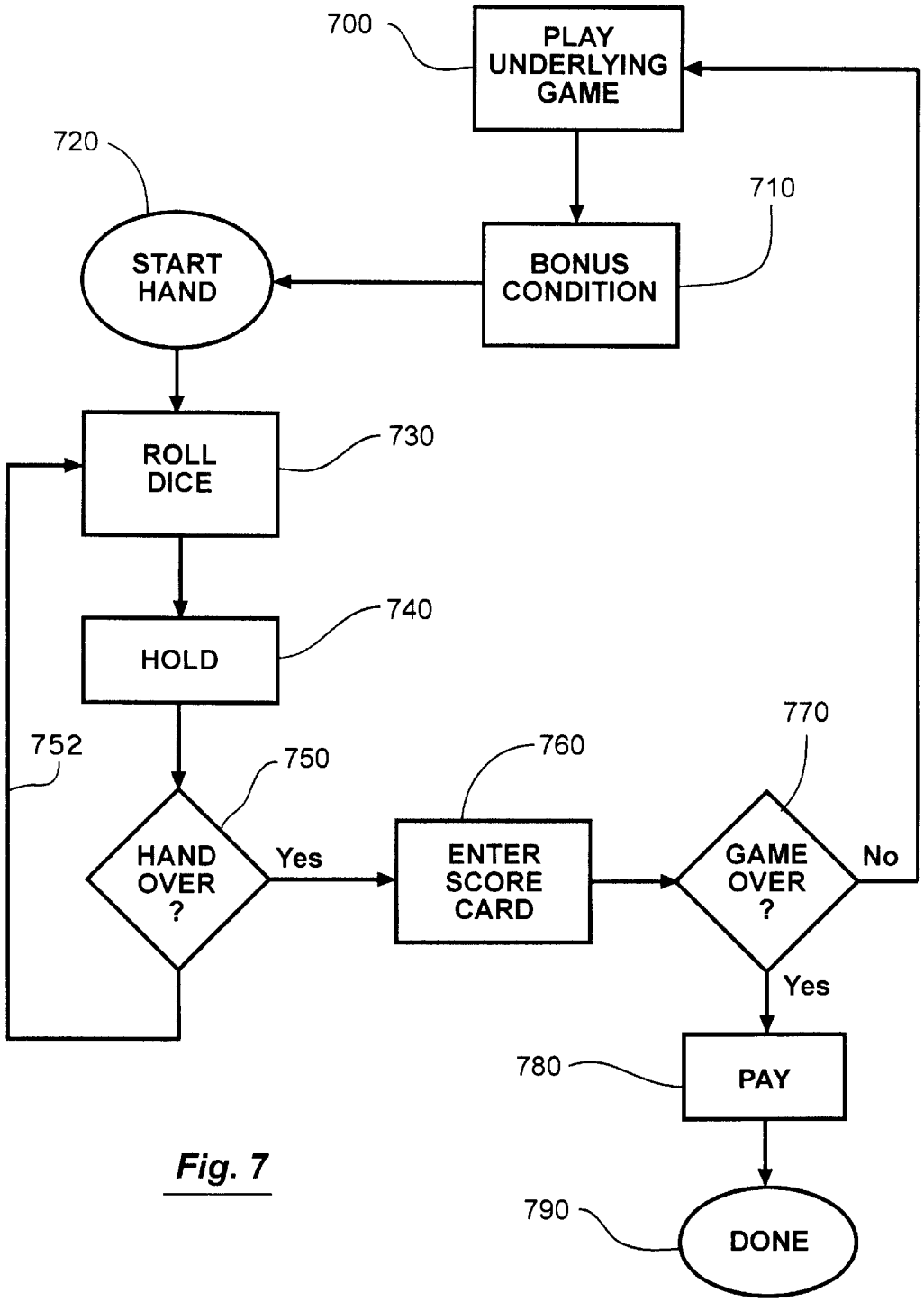
700
PLAY UNDERLYING GAME
720
START HAND
710
BONUS CONDITION
ROLL DICE
730
HOLD
740
752
750
HAND OVER ?
Yes
760
ENTER SCORE CARD
770
GAME OVER ?
No
Yes
780
PAY
790
DONE

Fig. 7

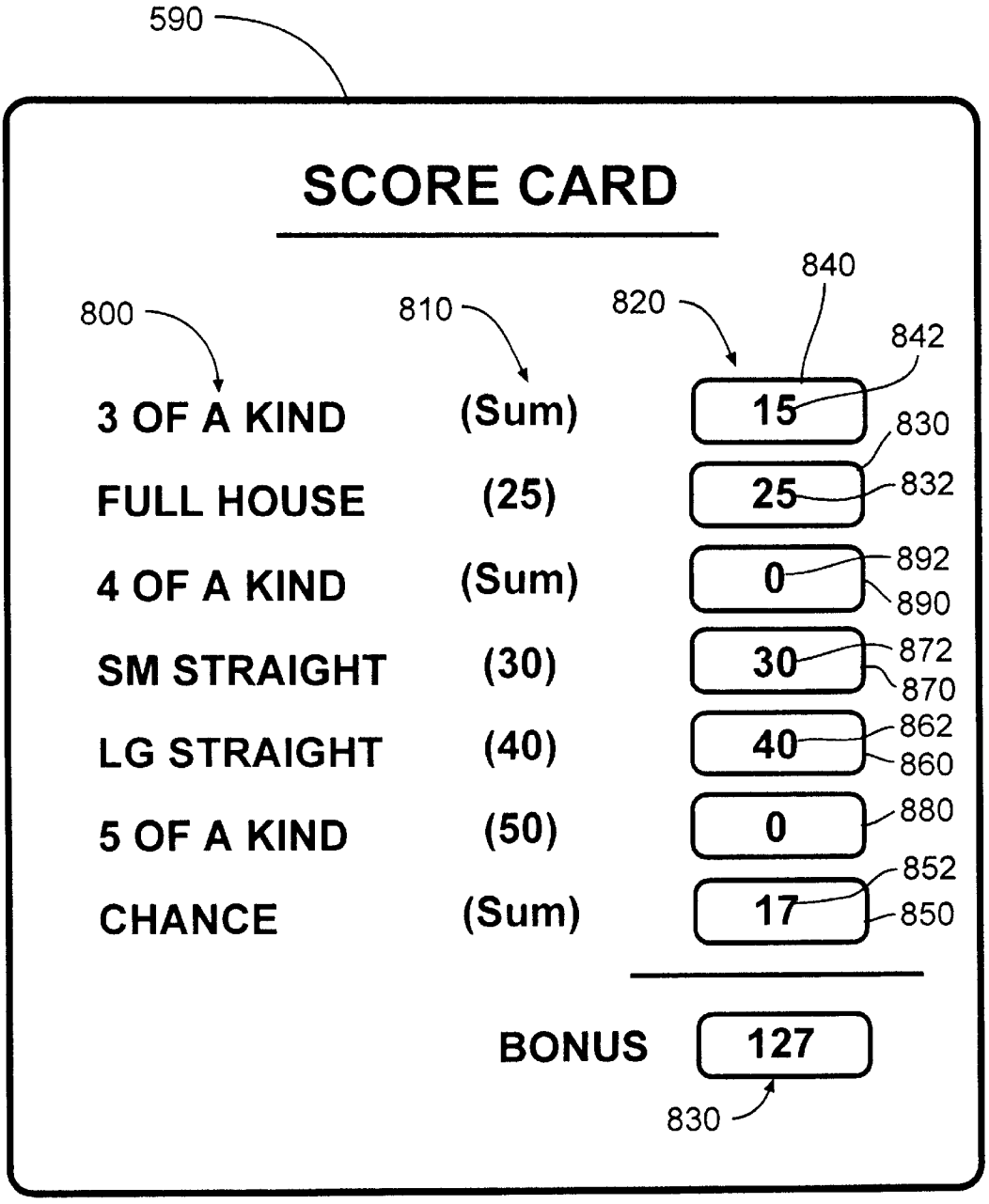
590
SCORE CARD
800
810
820
840
842
3 OF A KIND
(Sum)
15
830
FULL HOUSE
(25)
25
832
4 OF A KIND
(Sum)
0
892
890
SM STRAIGHT
(30)
30
872
870
LG STRAIGHT
(40)
40
862
860
5 OF A KIND
(50)
0
880
CHANCE
(Sum)
17
852
850
BONUS
127
830

Fig. 8

POKER DICE CASINO GAME METHOD OF PLAY

RELATED APPLICATION

This application claims priority to the provisional applications entitled "POKER DICE GAME METHOD OF PLAY," Ser. No. 60/068,625 filed on Dec. 23, 1997 and Ser. No. 60/078,348 filed on Mar. 17,1998.

BACKGROUND OF THE INVENTION

1. Field of the Invention

This invention relates to betting games suitable for casino play and, more particularly, to poker dice casino games.

2. Statement of the Problem

The game of poker is typically played with a single deck of cards. In Stud Poker variations, each player receives a predetermined number of unique cards. In Hold'em Poker variations, community cards are utilized. In Draw Poker variations, players are given the opportunity to replace their cards from the unused pack. Cards need not be the only device which provides the means for rank and suit. Dice, too, have this feature.

In conventional poker dice, five poker dice whose six sides bear playing-card denominations (i.e., ace, king, queen, jack, ten and nine) are used. However, conventional dice can also be used in poker dice with ace being high followed by the numbers six, five, four, three, and two in that order. The one number may or may not be wild. In conventional play, after the first throw of the five dice, a player may stand pat or may draw (as in Draw Poker) by throwing one, two, or three dice again. The object of poker dice is to secure any combination such as five-of-a-kind, four-of-a-kind, full house, straight, three-of-a-kind, two pair, one pair. Scarne's "New Complete Guide to Gambling" (1974).

Indeed, the popular game trademarked YAHTZEE by Hasbro, Inc. is basically a draw poker variation in which the players are allowed, twice, to "replace" existing rolls of five dice. Likewise, the casino games of Chuck-a-Luck and Sic Bo employ poker-like rankings with varying payoffs for obtaining one-, two-, or three-of-a-kind with a single roll of three dice. Likewise, the casino game of Craps refers to a pair occurring with the roll of two dice as "the hard way" and, for several wagers, differentiates this total from an "easy" one. Some commercial recreational game products assign various card values to the faces of six-sided dice. These are used, in conjunction with subsequent rolls, to construct a "poker hand."

A continuing need exists for new casino games and, in particular, for modifications and improvements to poker, dice, and poker dice that can be used for wagering, bonusing, and/or as a payoff dispensing mechanism. A continuing need exists to provide new and exciting bonus conditions for players of underlying games.

A further need exists to adopt the conventional home game of YAHTZEE, and other similar home games to a gaming environment such as is found in casinos. In conventional YAHTZEE games, a hand is assigned a score which is entered onto a pad of paper called a "score card" and all scores entered are similar in size. In the YAHTZEE game, a "small straight" box in the score card scores 30 points whenever four of the five rolled dice result in a sequence of four numbers. A "large straight" box is scored 40 points whenever all five of the rolled dice result in a sequence of five numbers. The YAHTZEE box is scored 50 points when the five rolled dice show "5 of a Kind." A

"chance" box is scored when the player chooses to sum the values of the five dice together. In the YAHTZEE game, each player is allowed a maximum of three rolls although the player may stop after the first or second roll. For the second and third rolls, the player may selectively hold none, any or all the dice. A need exists in a corresponding casino game based on the YAHTZEE game to provide a broad range of payoffs from small to jackpot amounts. In conventional YAHTZEE games some scores are fixed (e.g., 30 points) and other scores are variable (e.g., sum of dice). A need exists in a corresponding casino game to simplify the scoring so as to eliminate any confusion especially for new players. In a YAHTZEE game one hand occurs quickly and a typical game of thirteen hands is lengthy. A need exists in a corresponding casino game to adapt the length of the game to be comparable to other conventional casino games. A conventional YAHTZEE game also requires skill by a player. A need exists in a corresponding casino game to play the game with no skill, but retain suspense and excitement. Finally, need exists to adopt a popular game such as YAHTZEE to a wagering game providing a fair house advantage to the casino.

SUMMARY OF THE INVENTION

1. Solution to the Problem

The present invention solves the above problems by providing (1) methods for wagering on and playing a poker dice game, (2) methods for providing bonusing games for underlying casino games, and (3) methods for dispensing payoffs.

The present invention also solves the above problems by providing a method for wagering on and playing a casino poker dice game either as a stand-alone game or as a bonus game for an underlying gaming machine. In a preferred method of play suitable for video adaptation as a bonus game for a gaming device, money, gaming chips, credits, or their equivalent may be wagered. Buttons, either on screen or adjacent to the monitor, are provided for players to indicate their choices. An executable computer software program, or a hardware equivalent such as an EPROM, brokers the casino game of the present invention according to the rules of play. A number of bonusing conditions initiate the bonus game of the present invention which can also be used to initiate other types of bonus games. In a second preferred method of play, a game table or a gaming machine is used to play the poker dice game as a stand-alone game.

The present invention, in part, adapts the conventional home game of YAHTZEE to the casino environment as a bonusing game in a variety of embodiments. The present invention differentiates hands and assigns payoff values in a broad range from minimal values to jackpot values. The payoff values provide clarity in that the payoff values are all fixed or all variable. The length of the casino game varies under different embodiments of the present invention. A one-hand version of the game is designed for players experienced in the standard YAHTZEE game. Another version of the game of the present invention is designed to play successive hands in order to avoid chance. And a third version of the game of the present invention provides a limited score card. Finally, the present invention provides a casino game in which no skill is involved, but which provides moves that build suspense and retain excitement.

2. Summary of the Invention

A method for playing a stand-alone and a bonus casino poker dice having X dice, each of the X dice having F faces with a different symbol thereon so as to form a set {S} of

symbols on each of the X dice. The method of the present invention includes the steps of placing a wager; rolling the dice; holding none, any, or all of the rolled dice; ending the casino poker dice game when the dice are all held or when re-rolling occurs Y times; paying any winning combinations of symbols based on the placed wager and in response to the step of ending the game; re-rolling the non-held dice when less than all the X dice are held; and repeating various of these steps until the game ends. Variations on this basic method are set forth for stand-alone games, bonus games used in conjunction with underlying gaming machines or games, and playing a bonus game of the present invention in parallel with an underlying game so that a number of hands are played.

BRIEF DESCRIPTION OF THE DRAWINGS

FIG. **1** illustrates one embodiment of the prior art dice used in the poker dice game of the present invention.

FIG. **2** illustrates the stand-alone poker dice casino game table of the present invention.

FIG. **3** illustrates a stand-alone poker dice gaming machine of the present invention.

FIG. **4** illustrates a functional flow chart for the stand-alone poker dice gaming machine of the present invention.

FIG. **5** illustrates the bonus poker dice casino game of the present invention.

FIG. **6** is a functional flow chart for issuing a bonus condition under one method of the present invention.

FIG. **7** is a functional flow chart for one of the bonus dice games of the present invention playing Z hands.

FIG. **8** is an illustration showing a displayed score card of the present invention.

DETAILED DESCRIPTION OF THE INVENTION

1. Overview

As shown in FIG. **1**, five prior art dice **20** are shown each having six faces and with each face having a number in dots placed thereon. The casino game **10** of the present invention is more general and can use X number of dice **20** with each die **20** having F number of faces **30**. Under the teachings of the present invention, X can be any suitable number as well as the number of faces F. A player preferably initiates play of the casino game **10** by wagering a prescribed number of units. Thereafter, the casino game **10** begins with the player rolling the set of X dice. A total of Y "draws" (replacement rolls) are allowed after the original roll, and during each such draw, the player re-rolls any one or all dice and stands pat on the remaining dice. Once a total of Y+1 (Y replacement plus one original) rolls have occurred, or alternatively, the player "holds" all X dice, play of the casino game **10** ends, the hand is over, and the player's wager is settled according to a payoff table based upon the existence of any winning combinations in the held dice.

EXAMPLE I

In the following example X=6 dice, F=6 faces, Y=2 draws, and each face **30** of a die **20** has the following set of values {S}: {1, 2, 3, 4, 5, 6} as shown in the prior art and dice **20** of FIG. **1**. One form of a payoff table under the teachings herein comprises payoffs for the following winning combinations:

TABLE I

Winning Combination	Payoff
One Pair (e.g., 2 Sixes)	P1 for 1
Two Pairs (e.g., 2 Sixes and 2 Ones)	P2 for 1
Full House (e.g., 3 Fours and 2 Fives)	P3 for 1
6-of-a-Kind (e.g., 6 Fours)	P4 for 1
5-of-a-Kind (e.g., 5 Sixes)	P4 for 1
4-of-a-Kind (e.g., 4 Fours)	P4 for 1
3-of-a-Kind (e.g., 3 Fours)	P4 for 1
3-dice Straight (e.g., Four-Five-Six)	P5 for 1
4-dice Straight (e.g., Two-Three-Four-Five)	P6 for 1
5-dice Straight (e.g., Two-Three-Four-Five-Six)	P7 for 1
6-dice Straight (e.g., One-Two-Three-Four-Five-Six)	P8 for 1
Nothing	P9 for 1

Note that some of the payoffs may return zero units (i.e., the loss of the wager for the player P). For example, a final hand consisting of "Nothing" may be a loser (i.e., P9=0). Note that some of the "payoffs" may "push" so that the player P simply keeps the wager **260** (i.e., P1=1). The payoffs P1 through P9 are designed to provide a broad range from minimal (or no) payoffs to large (or jackpot) payoffs. The selection of winning combinations and the number of payoffs can be any suitable amount to earn a desired casino house advantage as will be subsequently discussed.

It is to be expressly understood that the winning combinations in Table I are based upon faces **30** of each of the die **20** having a set of values {S}: {1, 2, 3, 4, 5, 6}, but that any suitable set of values {S} could be utilized such as card ranks such as: {S}={ace, king, queen, jack, ten, and nine}. In addition, the members of each {S} could be labeled with their faces as card ranks and suits. Any suitable symbol **40** such as a letter, number, graphic and/or color, individually or any combination thereof, could be utilized with any number, X, of dice having any number of faces, F.

Other hand values, both poker-like and non-poker-like, are also possible. For example, the value of a hand may be calculated as the sum of the individual dice (where the symbols **40** involve numbers). Alternatively, the value of a hand may be the sum of the three highest-ranked dice less the sum of the three lowest-ranked dice. In these cases, the payoff would be modified to reflect these possibilities. It can be appreciated that a wide variety of winning combinations can be selected and corresponding payoffs can be assigned under the teachings of the present invention by varying X, F, Y, and {S}. Under the teachings of the present invention, a novel method for playing a casino poker dice game having X dice, each of the X dice having F faces with a different symbol thereon so as to form a set {S} of symbols on each of the X dice. The method includes the steps of placing a wager **260**, rolling the X dice, and then holding none, any, or all of the rolled dice in response to the step of rolling. The player re-rolls the non-held dice. The steps of holding and re-rolling occurs Y times after the initial roll. At any time after the first roll, the casino poker dice game of the present invention ends when the player holds all of the dice after any roll or when re-rolling occurs Y times. At the end of the game, the player is paid according to the payoff table **230** any payoffs for any existing winning combinations in the hand. As more fully explained below, this method can be adapted to a stand-alone casino game or into a bonusing casino game for an underlying gaming machine.

2. Stand-alone Casino Game

A first preferred embodiment, which is illustrated in FIGS. **1** and **2** and comprises a stand-alone casino game **10**. In FIG. **2**, the casino game **10** of the method of the present invention may be played on a table **200** having a player P

position **210** and a dealer D position **220**. On the casino game table **200** is a payoff table **230** and a recessed throw area **240**. Also on table **200** is a wager area **250** upon which a wager **260** may be placed by the player P at position **210**. The shape of the game table **200**, where the payoff table **230** is located, the location of the wager area **250** and the design and location of the throw area **240** are matters of design choice and the present invention is not limited thereby.

EXAMPLE II

In the following discussion, this embodiment of the casino game **10** employs conventional six-sided (F=6) dice **20** with X=5, Y=2 and {S}={1, 2, 3, 4, 5, 6}. The payoff table **230** in Table II is based upon a 10 unit (e.g., coin) wager **260**. The player P places the wager **260** in area **250** to start play of the hand. The player P has an original or first roll of all five dice **20** in area **240** which results in the dice **20** showing values at the end of the roll. The player P may then hold none, any, or all of the five dice **20**. If the player P decides to hold all five dice **20**, the hand is over. Otherwise, the non-held dice are re-rolled by the player P in area **240**. The player P may then again hold none, any, or all of the five dice **20** including the dice held in the prior re-roll. If the player P decides to hold all five dice **20**, the game is over. Otherwise, the non-held dice are re-rolled by the player P. The final values of the five dice are compared to the following pay table, which assumes a ten-coin wager **260** in area **250** by the player P:

TABLE II

Winning Combination	Payoff (coins)
5-of-a-Kind 6s on 1st Roll	400
5-of-a-Kind 5s on 1st Roll	200
5-of-a-Kind 4s on 1st Roll	175
5-of-a-Kind 3s on 1st Roll	150
5-of-a-Kind 2s on 1st Roll	125
5-of-a-Kind 1s on 1st Roll	100
5-of-a-Kind on 2nd or Final Rolls	50
5-dice Straight	20
4-of-a-Kind	14
Full House	10
3-of-a-Kind	4
4-dice Straight	4
Sum of Dice > = 24	4
Sum of Dice <24	0

In Table II above, it is clear that the player P receives the highest payoff if a winning combination is obtained on the first roll. For example, if on the first roll, all sixes are rolled, the game is over and the player P receives four hundred coins from the dealer D based on the ten coins wagered. In Table II, the only practical winning combinations paying on the first roll are five of a kind. Clearly, a player would hold and not re-roll any dice and the hand after the first roll would be over. Furthermore, it is possible that the hand will also be over on the second roll since the player P could obtain five of a kind on the second roll and a five dice straight. At this point, there is no practical reason to re-roll and the player P would hold and receive the winning payoff from the dealer D. However, in the case where the Player P wishes to improve his or her hand to achieve a winning combination or a winning combination with a better payoff the player may selectively hold and re-roll the dice a third time under this example.

The following sets forth the player's strategy which recognizes that the player P has two separate decisions to make—one after the 1st roll and one after the 2nd roll. The decision after the 1st roll is the beginning position, the decision after the 2nd roll is the intermediate position, and the final roll is the final position.

Beginning with the intermediate position, each possible player strategy associated with each possible combination of five dice are: a) holding all 5 dice (1 possibility); b) re-rolling 1 die (5 possibilities); c) re-rolling 2 dice (10 possibilities); d) re-rolling 3 dice (10 possibilities); e) re-rolling 4 dice (5 possibilities); and f) re-rolling all 5 dice (1 possibility). For each of these possibilities, all possible subsequent rolls are considered, properly weighted according to their probability of occurrence, and compared to the pay table in Table II. This leads to an assessment of the theoretical expected value from each possible strategy at the intermediate position. The greatest such value, and its associated strategy, are chosen as optimal and saved. Thereafter, by working backward, the optimal strategy for the beginning position can be obtained. Toward this end, each possible combination of five dice is considered. The expected value of each possible strategy is calculated by comparison with the saved expected values for the intermediate position. As before, the greatest expected value and its associated strategy are chosen as optimal. The expected return is then calculated by weighting each possible beginning position by its probability of occurrence and its expected value, and summing over all such possible positions. It is found that a theoretical player's expected return, with optimal play and a 10-unit (i.e., coin) wager, is 9.72 units. Thus, the player's optimal expectation is −2.8% of a house advantage of 2.8%. This substantially equals the original wager **260** and it is desired that for optimum play that the player's expected return be within 10% of the wager. For non-optimal players, the house advantage will be even greater.

What has been shown above in Table II is an example of the casino game **10** of the present invention. It is to be appreciated that a wide variety of winning combinations, associated payoff values, amounts for wagers **230** placed, and the variation of X, F, and Y as well as the composition of {S} can be changed to create numerous and equivalent variations of the casino game **10** under the teachings of the present invention while preserving a house advantage and a player's expectation that is fair to the casino and to the player.

One variation to the method of the present invention is to permanently hold all dice throughout the game. Once dice are held they cannot be re-rolled. To implement this variation, the dealer D could place the permanently held dice to one part of area **240** or even on top of the table **200**. The payoff table **230** would be changed to provide different payoffs for the winning combinations to accommodate this variation.

Another version would be to vary the value of Y (i.e., the value of the replacement rolls). For example, the payoff table **230** could have different payoffs for different values of Y (e.g., Y=0, Y=1, Y=2, and Y=3). The player P in such a variation would place a different valued wager **260** for each different value of Y. Or, a single payoff table **230** similar to that set forth in Table II above could be utilized and the value of Y could be randomly selected such as by rolling a separate die having different values of Y on each face of the die or by spinning a separate wheel having different values of Y on the wheel. The variation of Y adds additional excitement to the casino game **10** of the present invention. Or, the value of Y could be based upon the number of games **10** the player P successfully plays at the table **200**. For example, after playing a given number of games, the value of Y could be increased thereby making it possible for the player P to

obtain a winning combination or a winning combination with a higher payoff since additional re-rolls of the dice are possible.

In summary, the stand-alone casino game of the present invention in Example II is over in Y+1 or less rolls and provides a broad range of payoffs based upon the winning combinations. The payoffs in Example II are fixed according to the payoff table **230**. In summary, the player P places a wager **260** to play the casino game **10**. The player P then rolls the dice **20** and then, if necessary, re-rolls the dice Y number of times in order to receive an optimal winning combination resulting in the best payoff. The dealer D at the end of the hand pays the player P a payoff based upon any winning combination, if any is present.

It is to be understood that the stand-alone game shown in FIG. **2** which is a manually played game between a player P and a dealer D can also be incorporated into a stand-alone gaming machine such as shown in FIG. **3** so that a dealer D is not required. For convenience, as is true throughout the specification, like numerals refer to like functional attributes in the different figures and embodiments. Hence, in FIG. **3**, a payoff table **230** is shown which functionally corresponds to the payoff table **230** in FIG. **2**. The stand-alone gaming machine **300** further has a dice **20** play area **240** which, in this case, may be a video monitor such as conventionally used for video poker games, or which may comprise a plurality of mechanically driven dice which are conventionally available (e.g., each die **20** being operated by a stepper motor to assume a random position when rolled). Unlike the table game **200** shown in FIG. **2**, provision must be made to hold dice after a roll and this occurs in area **310** by means of buttons A through E. Button A corresponding to die **20**A, etc. This would correspond to similar buttons that are used in conventional video poker games which are selectively activated to hold a card during play of a hand of poker. Hence, when a player pushes, for example, button A, it becomes lit and the die **20**A is not re-rolled. It can be appreciated that after a roll, all five of the dice shown in FIG. **3** can be held by pushing all five of the buttons A through E. In which case, the hand is over. Furthermore, it is well within the skill of the art to provide the function of the buttons A through E actually on area **240** when area **240** is a touch video screen so that a player may simply touch the dice or an area labeled "hold" near the dice to hold the dice before the next re-roll. How dice **20** are held before the next re-roll can be accomplished by many numerous and equivalent ways as this technology presently exists for hold cards in conventional video poker machines.

In FIG. **3**, the player conventionally puts a wager **260** into the gaming machine **300** in area **320**. How a wager **260** is inputted into a gaming machine is well known in the industry and comprises numerous approaches including, but not limited to: coin in, bill in, card in (credit, debit, or smart), establishing a credit on the machine which can be conventionally shown in a credit meter, the use of a ticket, etc. How a wager is inputted or credits established in the gaming machine **300** is not material to the teachings of the present invention. However, to commence play, a player must wager, or bet by pushing a button **330**, to start the casino game **10** of the present invention. It is also conventionally known with respect to gaming machines that a player may bet one, two, three, etc. units and, therefore, the player typically has a choice as to how much to bet within a predetermined range of bets. In a conventional gaming machine based upon three separate bets, a player could bet one unit, two units, or three units (the latter commonly called a "max bet"). Hence, the bet function **330** could be a single button or three separate buttons corresponding to the amount bet.

To illustrate the teachings of the invention, a single bet button **330** is provided as shown in FIG. **3** and a payoff table **230** corresponding to the single bet. It is to be expressly understood, that three or five unit bets could be made by the player and that the corresponding pay table **230** would set forth the payoffs for each unit bet. This is well known in the gaming industry. Furthermore, the payoff table **230** could be printed or could be a dynamic pay table comprised of liquid crystal displays that specifically show only the payoffs for the precise amount bet. Also in FIG. **3** is shown the conventional cash out function **340**, which enables the player to remove money from the machine **300** when the player is done playing at the machine **300**. The cash out function **340** may be one or more structural devices such as a coin out mechanism, tickets dispensed, or the like. Function **340** could also be combined with function **320** in the case of a smart card so that the smart card, when inserted delivers credits to the machine, and when the cash out function **340** is activated, credits are delivered into the card. Again, how a player cashes out and the form of the "cash" is immaterial to the teachings of the present invention.

The first roll of the dice **20** occurs when the bet button **330** is pushed. After the first roll, the player makes a decision as to which dice **20** to hold based upon the winning combinations in the payoff table **230**, and presses the respective hold buttons **310**, and then presses the re-roll button **350**. The held dice are not rolled but the remaining dice are re-rolled (i.e., Yi=1). Here, Yi refers to the instantaneous value of Y. Again, the player analyzes the symbol combinations on the re-rolled dice including the held dice and makes a decision. At this time, and based upon the procedure in Example II, the player has the ability to hold any of the dice. In other words, the previously rolled dice in buttons **310**, A through E, are now unlit and all dice **20** may be re-rolled or selectively re-held if desired by the player. Again, the player selects which buttons **310**, A through E, to activate to hold the respective dice. The pressed buttons, in a version of the method of the present invention, light up to indicate hold. The player presses the re-roll button **350** once again for the third and final roll (i.e., Yi=2). At this time, the machine **300** automatically determines the winning combination and, if a payoff is due based on the pay table **230**, credits the player in a conventional fashion which is typically displayed on the machine **300**, not shown. Whenever the player, after a roll, activates all five of the hold buttons A through E, the hand is over and the machine **300** determines the displayed combinations for the dice **20** and, if a winning combination exists, a payoff from the payoff table is paid. The hand is also over when Yi=Y=2 as this is the third and final roll. Again, the combinations displayed for the dice **20** are known to the machine **300** and, if a winning combination exists in the payoff table **230**, a payoff is made to the player. It is well known in the gaming industry how to generate random combinations for the dice **20** based upon a random number program in the machine **300** and cause the rolled dice **20** to display the results from the random number generating program. These randomly generated rolled dice values are then used in a look up table, at the end of the hand, to determine whether a winning combination exists and, if so, the corresponding payoff is paid. All of this technology for accomplishing these individual functions is well known in the design and operation of gaming machines **300**. The method of the present invention, as fully discussed and illustrated therein, however, is unique.

In the alternate embodiment, when the dice are once held they are permanently held during all subsequent re-rolls. Once the held buttons **310**, A through E, are pressed after

any roll of the dice they remain permanently lit until the end of the hand and the dice **20** they identify are never re-rolled.

In the alternate embodiment, the value of Y can be optionally displayed in display **360** such as a portion of the video screen **240**. The value **370** of Y (shown to be 2 in FIG. **3**) can be varied as previously discussed or the value of Y can be randomly varied, be based upon a function of the wager placed, vary as a function of the number of successive games played by a player, and vary in any other equivalent method. If Y is randomly varied according to a random number generator, then after placing the bet **330**; the display **360** is activated to show the random selection of the value for Y. A dynamic payoff table **230** could then show the payoff associated with the selected value **370** of Y in one design choice. In this design choice, different values **370** of Y randomly selected would have a different payoff table which would be dynamically updated and displayed after the bet **330** is placed. Then the dice **20** would be rolled in the first roll. In another design choice, a static payoff table **230** would be provided and the random selection of Y would affect the ability of the player to achieve winning combinations and corresponding payoffs. In this design choice, when Y=1 it is more difficult for a player to have a winning combination and when Y=3, it is much easier for a player to achieve a winning combination. The variation of Y, as displayed in area **360**, adds further excitement to the play of the game.

It is to be expressly understood, that the representation of the dice **20** in area **240** can be mechanical dice which are activated by a suitable device such as a stepper motor, could be graphical representations on a video screen of dice being rolled in free space, or any other rolling action. Indeed, in one type of graphical presentation, the held dice could be physically shown to be removed to another area of the video screen leaving only the remaining dice to be re-rolled showing being rolled, shown as if they are thrown from a cup or the like.

In FIG. **4**, a functional method for implementation with a gaming machine **300** (e.g., microprocessor controlled or any suitable processor, controller, or computer) operates as follows. The player in stage **400** places a bet (corresponding to units of a wager **260**) such as by activating bet button **330** in FIG. **3**. Stage **410** is entered wherein the gaming machine **300** causes the dice **20** to be rolled based upon results from a random number generator (RNG) **420**, which can be resident hardware or software in the gaming machine **300**. It is well known in the gaming industry how to design and implement random number generators **420** to provide a random roll of the dice **20** that is fair to the player, fair to the casino operator, and approved by a local gaming authority. The gaming machine **300** causes the mechanical dice **20** to assume a rolled position, or in the case of a video display, causes the video display dice to assume the rolled positions showing resultant values. The gaming machine **300** displays the roll results in stage **430**. Stage **440** is now entered to determine whether the instantaneous value of Y (shown as Y_i) equals Y. If so, the game over stage **442** is entered. The game is over if the desired value of re-rolls (i.e., the value of Y) has occurred. If the value of Y has been reached, the game is over and stage **450** is entered to determine any payoffs. If Y hasn't been reached, then stage **470** is entered. The gaming machine **300** responds to any one of the buttons **310** that are activated to a hold status to a hold status by the player in stage **480**. These buttons are read in stage **490**. If the hand is in stage **480** and all buttons **310** are activated, the game also ends and stage **450** is entered. It is the obligation of a player to press all of the hold buttons when a winning combination occurs before the next re-roll. If the player fails to do so, then the player misses the opportunity for a winning payoff. For example, if after the first roll, the player has "5 of a Kind" shown in stage **430**, the player is required to activate all of the hold buttons A through E in area **310**. If not all the dice are held in stage **480**, stage **490** causes the instantaneous value of Y_i to increase by 1 and Y_i=1. In stage **410**, only the non-held dice are re-rolled based upon results from the random number generator **420** and displayed in stage **430**. Again, the game is over in stage **440** if Y_i=Y. Otherwise, stage **470** is entered and the player selects any of the dice **20** to be held by pushing buttons, A through E, in area **310** which are identified in stage **480** and the game continues as described above until stage **490** increments Y_i by 1 and Y_i=1. The non-held dice are then re-rolled in stage **410**. The results are displayed in stage **430** and the game is over in stage **440** since Y_i=Y=2 in this example. At this point, only stage **442** is entered and the final determination is made as to whether or not the resulting combinations earn a payout according to the payoff table **230** is made in stage **450**. Any payoff is a credit (or actual coins) occurs in stage **460**. It is to be understood, that while actual values (e.g., 100 coins) are used in the examples herein that the payoff can be any suitable award such as, but not limited to: coins, dollars, credits, objects (i.e., car), comps (i.e., free dinner), free plays (e.g., 5 free plays of the underlying game), multiplies (e.g., 15× the wager made to the underlying game), etc.

3. Bonus Game

In a second preferred embodiment, the invention is utilized as a bonusing feature for a primary or underlying gaming machine. The primary gaming machine could be a traditional reel slot, video reel slot, video poker, keno or other variety of casino game. The nature and type of the underlying gaming machine does not limit the teachings contained herein. FIG. **5** shows a conventional reel slot game **500** having bonus game **10** according to the method of the present invention built into an upright rear portion **302** of the slot game **500**. The bonus game **10** can be on top of, on the side of, near, or adjacent the underlying gaming machine **500**. The underlying reel game **500** has conventional devices for accepting wagers, displaying wagers, displaying credits, playing the game, betting, displaying payoffs for winning combinations, cashing out, etc. all of which are not shown, but well known in the gaming industry. The bonus game **10** can be comprised of dice **20** that are conventionally available mechanical dice or dice graphically represented in a video display as shown in FIG. **3**. The bonus payoff table **230** can be printed, displayed in a digital display or incorporated and displayed in the same area **240** that displays the bonus game. For example, area **240** could be a video screen. Hence, FIG. **5** is but one representation of many equivalent designs under the teachings of the present invention. In addition, a bonus button **510**, a re-roll button **350**, and hold buttons **310** are provided separately on the underlying game **500** or can be incorporated as touch areas when area **240** is a video display.

EXAMPLE III

Consider a conventional slot machine **500** in which a particular winning combination of symbols is due a game payoff, GP, of 60 coins. In this example, the player can optionally take the 60 coin payoff from play of the underlying slot machine **500** or can play the bonus game **10** (X=5, Y=1, F=6, {S}: {1, 2,3,4,5, 6}) by pressing button **510** to initially roll the dice **20**. The payoff of 60 coins now becomes the wager **260** for the bonus poker dice game **10** of the present invention. Rather than simply pay the player a

game payoff, GP, of 60 coins, the player in this example can use the game payoff GP to play the bonus game **10**. Consider the following bonus payoffs BP for winning combinations using the 60 coins won in the underlying slot game **500** as the wager **260** for the bonus game **10**:

TABLE III

Winning Combination	Payoff (coins)
5-of-a-Kind 6s	1000
5-of-a-Kind 5s	500
5-of-a-Kind 4s	400
5-of-a-Kind 3s	300
5-of-a-Kind 2s	200
5-of-a-Kind 1s	100
4-of-a-Kind	90
5-dice Straight	80
Full House	70
3-of-a-Kind	60
4-dice Straight	50
Nothing	35

As an example, the player pushes bonus button **510** to wager the 60 coins won in the underlying game. The dice **20** are initially rolled and result in a combination of: 3, 3, 5, 5, and 6. The player presses the hold buttons A, B, C, and D corresponding to dice **20**A, **20**B, **20**C, and **20**D which holds the dice as 3, 3, 5, 5. Dice **20**E having the "6" value is not held and the player hits the re-roll button **350** in an attempt to obtain either a 3 or a 5. The results of the re-roll of dice **20**E results in a 5 so that the player obtains a full house: 3, 3, 5, 5, and 5. Since Y 1 in this example, the game is over and the player receives 70 coins.

An analysis algorithm identical to that described above for Example II yields an optimal solution with player expected outcome for the bonus game **10** (or, bonus payoff BP) of 60.55, 81.38, and 111.73 coins, for Y=1, 2, and 3, respectively. Thus, the present invention could be used as a method to enhance game play while retaining, essentially, the previous player's expectation PE for the underlying slot machine (provided Y=1). It can be appreciated that the present invention may be used, with proper selection of X, Y, F, and {S} together with the winning combinations and the payoffs in the payoff table **230**, to create a bonus payoff BP of arbitrary expected outcome. In this fashion, the invention can be used either as a bonus game or as a payoff mechanism with known, maximum, average payoff.

In the above example, the player's expectation, PE, is roughly equal to the bonus payoff, BP, of the underlying game and, therefore, the player is not penalized, over time, for playing the bonus game **10**. However, the player upon winning the underlying game can risk or gamble the game payoff, GP, on the possibility of a much higher payoff which adds considerable excitement to the playing of both the underlying game **500** and the bonus game **10**.

The game payoff GP in the underlying game **500** varies, of course, based upon the winning combinations earned in the underlying game. The bonus game **10** can receive some or all of the different valued game payoffs GP to play the bonus game **10** of the present invention. In this event, payoff table **230** can be dynamic having a set of bonus payoffs for each of the game payoffs in the underlying game **500**. Hence, when the player receives an underlying game payoff GP of 10 coins, and pushes the bonus button **510**, the payoff table **230** dynamically changes to provide the bonus payoff values BP corresponding to a ten-coin (or unit **10**) wager **260** (which, of course, is the game payoff GP). The payoff table **230** can be a matrix of liquid crystal displays. When the player receives a twenty-coin game payoff GP a different bonus payoff table is displayed. It may be that in some designs only a single game payoff GP such as in the example above of sixty coins is permitted to play the bonus game **10** of the present invention in which case the payoff table **230** can be static such as a printed payoff table.

In Example III, Y=1 so that the re-roll button **350** and the hold buttons **310** are required. If Y=0, then the input **350** and the hold buttons are not required.

In an alternate version, once a hold button **310** is pushed, it is permanently held throughout all subsequent re-rolls, the bonus game **10** of the present invention functions as previously discussed. Likewise, in the alternative where values of Y vary, such a "variation" can easily be accomplished by having the random appearance of a symbol on the reels **530** appear either on the payline **340** or anywhere within the area **550**. For example, a graphic symbol **560** with numerical symbols such as 1, 2, or 3 could randomly appear. This symbol could then be displayed such as shown by the dotted line area **590** in FIG. **5**. Hence, when a winning combination appears in the play of the slot game **300**(or any other suitable bonus condition), the player is then entitled to the Y value obtained earlier in the play of the game **500** from the appearance of symbol **560**. It may be that several values of Y may appear in the play of the game before a winning combination is obtained. In which case, the last value of Y would be the value controlling play of the bonus game. Hence, several Y values may be displayed in display **550** before a winning combination is obtained, but it is the last value that controls. It is also to be expressly understood that such a symbol **560** could also be the bonus condition that causes play of the bonus game to initiate as will be discussed subsequently.

In yet another version of the method of the present invention, the graphic symbol **560** is always the value "one" and whenever it randomly appears on the pay line **540** (or elsewhere) then the value of Y in display **590** is incremented by "one." The initial value of Y can be set to "zero" or to "one" (at the start of play of the underlying game and/or after the end of a bonus game) and as the play of the underlying game **500** continues, the value of Y is incremented with every appearance of the symbol **560**.

a. Initiation of Bonus Game

Many conditions can be used to initiate the bonus poker dice game **10** and, in fact, such conditions can also be used to initiate other types of bonus games. The conventional slot machine **500** of FIG. **5** functions to operate in conjunction with the present invention as a bonusing game. The underlying slot gaming machine **500** employs either video representations of reels or physical reels **530**. The bonus game **10** initiates via a special bonus symbol or a combination of symbols **520** appearing on the slot gaming machine, for example on the payline **540** or anywhere in display window **550**. In the preferred embodiment, one, some, or all of the winning combinations in the play of the underlying game are conditions that initiate the bonus game. Each of these winning combinations have a game payoff value, GP, which is used as the wager in the bonus game under the teachings of the present invention. Each different game payoff, GP, value in the preferred embodiment would have its own set of bonus payoffs set forth in table **230**. Hence, a player would be able to make a decision whether to wager the game payoff GP of the bonus game or to simply take the game payoff value GP and continue play of the underlying game. The bonus payoffs, BP, for each winning combination in the underlying game **300**, over time substantially equals the

game payoff value, GP, for the winning combination in the underlying game. In an alternate version, a special bonus symbol either appearing on the payline **340** or in the area **550** could initiate the bonus game. In this alternate version, a winning combination of symbols need not occur in the play of the underlying game. Rather, the bonus symbol appears which does not necessarily have associated with it a game payoff value, GP. It simply is a symbol that allows the player to play the bonus game of the present invention. Hence, the player does not have to make a choice on wagering the game payoff value GP to play the bonus game. Rather, the player randomly receives the bonus symbol in the play of the underlying game, and qualifies to play the bonus game. In these designs, under the teachings of the present invention, the funding for the bonus game can be worked into the payouts in the underlying game.

In this alternate version, the player commences play of the bonus game. Furthermore, the special symbol, as previously discussed, could also bear a numerical value 4Y so as the player plays the underlying game **500**, the appearance of the special symbol with a Y value causes further excitement since the value of Y varies randomly. Of course, when the value of Y is greater, the player has more re-roll opportunity to improve his final hand and thereby increase his bonus payoff.

Alternatively, the initiating condition for the bonus game **10** is randomly assigned and unrelated to symbols appearing in the underlying game machine **500**. This can occur with a timer being randomly set with values based upon a random number generator. After being set, the timer times out and initiates the bonus game **10**. Many well known designs are available for providing a step of randomly initiating a bonus condition such as a timer timing out, etc. In this case, the wager **260** for the bonus game **10** is zero and the bonus game **10** is "free" (i.e. a wager of zero). However, the wager **260** could also be nonzero such as simply the wager for the underlying game.

As another example, the present invention is utilized as a bonus game **10** for an underlying game of video poker. For example, instead of paying a Full House (obtained in the conventional underlying game for video poker) a prescribed number of coins GP, the bonus game **10** is played with a pay table **230** such that the player's expected PE return is similar to the aforementioned game payoff GP with little, if any, change in player's expectation for the underlying game. Hence, the bonus game **10** initiates when a payoff condition occurs in the underlying table game. The initiation could occur with only one, some, or all of the payoffs for winning combinations in the underlying table game.

The initiation condition can also be a function of an accumulated value won or lost in the underlying game. For example, the player at underlying game **300** accumulates winnings of a predetermined value such as 100 coins over many games. This accumulation can be displayed in a graphics display **620** such as a temperature gauge or a fuel gauge. Obtaining the value of 100 coins triggers the bonus game **10** and 100 coins becomes the wager **260** to play the bonus game. Alternatively, the 100 coins is awarded to the player in addition to playing the bonus game. Or, the 100 coins are not awarded to the player, but instead the bonus game is played, etc. Likewise, the graphic display **620** can show a player accumulating losses over many games such as showing a display where an object sinks deeper and deeper into a well, or the like. When a predetermined accumulated loss value has been obtained, such as losing 100 coins, this can be the bonus condition that triggers the play of the bonus game. While the above discussion is based upon values of winning or losses over many games, other suitable triggers could be used as the condition signal to play the bonus game of the present invention. For example, the bonus trigger condition can be counting player wins or player losses over many games. That is, whether the game is won or lost. For example, twenty wins could qualify for the bonus game, or twenty accumulated losses would qualify. Likewise, the condition for the bonus game can initiate based upon an accumulated number of games being played which can either be a predetermined number or can be a random number. For example, every twenty games qualifies the player to play the bonus game or a random number selected in a range that, over many games, averages to be once every twenty games. While these are all variations of approaches to provide conditions for initiating the bonus game of the present invention, it is to be expressly understood that many other equivalent conditions could initiate a bonus game and that the present invention is not limited to how the bonus game condition originates.

FIG. **6** sets forth a functional flow chart that can be incorporated into the underlying game **500**. When the start of the underlying game **500** occurs in stage **600** such as is conventionally done by a player sitting down and placing a bet, stage **610** is entered and the underlying game **500** accumulates value. As discussed in the preceding paragraph, the accumulated values could be units won over many games, units lost over many games, counting player wins or players losses over many games, or simply counting games played, etc. As the values are accumulated in stage **610**, a suitable graphics display **620** could appear such as shown in FIG. **5** with the temperature gauge graphic **620**. Any suitable graphic display could be used. In stage **630**, the underlying game determines whether the instantaneous accumulated value determined in stage **610** equals a trigger value in stage **630**. As discussed, the trigger value can be set or can be randomly varied within, for example, a range of values. The random selection in the range of values being under control of a random number generator. If the trigger has not been reached, the process re-enters stage **610** to accumulate the next value, etc. Hence, as values are accumulated in **610** and tested in stage **630**, the display **620** is updated to provide feedback to the player. When the instantaneous value equals the trigger value in stage **630**, the underlying game issues a bonus condition in stage **640** causing the bonus game to be played.

As another example, the methods of the present invention may be utilized in a bonus game **10** for an underlying table game. The present invention may be utilized as a part of the main wager, or as part of a side wager in the table game. For example, in a live table game of Blackjack, a separate wager may be made to participate in the bonus game **10**, based on the outcome of the main wager. For example, a wager **260** of $1 is made upon the player receiving a suited natural. Should the player receive such a hand (i.e., suited natural in single deck=4/52×4/51×2=0.012—roughly a 1 in 84 chance), the bonus game **10** may be implemented with an average return of $72.50, leading to an overall expectation, for the side wager with optimal play, of roughly −12%. Here, the invention may be utilized with conventional dice as shown in FIG. **2**. The present invention may also be utilized alone with or without an associated wager **260**. It may also be utilized as a dispensing means with an expected value and distribution about said value.

The bonus game **10** of the method of the present invention may be included within other table games, machines, or systems. For example, the bonus game **10** could be used to reward coins to players in a linked progressive application.

In a linked progressive bonusing system, several machines are linked together. Generally, a pool of money grows until reaching some prescribed level. At this time, the system goes into "bonus mode." At this time, the present invention may be utilized by randomly awarding eligible players a free bonus game, together with the associated win which is taken from the pool of money. This process can continue until the pool of money is exhausted, or until some other means is utilized to end the bonus mode. Hence, the bonus game shown in FIG. **5** could be located at each machine in the progressive system or could be a large bonus game located above, but visible to all progressive machines. In the latter version, each progressive machine would still have the inputs **510**, **350** and **310**.

The foregoing is not meant to be limiting but is intended instead to provide examples of multiple uses for the present invention, as a bonusing feature to an underlying game **500** and/or as a means of dispensing a known average number of coins, albeit with some fluctuation about the average, from game to game.

A number of different embodiments have been discussed for initiation in the method for the bonus game **10** of the present invention. It is to be expressly understood that "how" the bonus game is initiated can comprise a number of equivalent approaches and the method of the present invention is not to be limited by those specific approaches discussed above.

4. Alternate Bonus Game Embodiments

The bonus game **10** is robust in that it can accommodate varying methods of play.

a. Playing Z Hands

In an alternate embodiment, the methods of the present invention are utilized as a bonus game **10** to an underlying game whereby a total of Z hands are played to finish the bonus game **10**. A method for initiating a condition to play a hand of the bonus game **10**, has been previously discussed. After each hand, however, a dynamic score card **590** (shown in dotted lines in FIG. **3**) is updated and points are assigned based on the value of the hand. The score card **590** can be a bank of liquid crystal displays, a touch video screen, or part of the video screen of the dice. Once Z bonus hands are played, the player's total points are compared to a payoff table **230** and a bonus paid.

Consider the following three score card examples:

TABLE IV

	Payoffs (units)		
Entry	Schedule A	Schedule B	Schedule C
3 of a Kind	Sum of dice	20	Sum of dice
Full House	25	25	Sum of dice
4 of a Kind	Sum of dice	30	Sum of dice
4-dice Straight	30	35	Sum of dice
5-dice Straight	40	40	Sum of dice
5 of a Kind	50	50	Sum of dice
Chance	Sum of dice	10	Sum of dice
TOTAL	Sum of Entries	Sum of Entries	Sum of Entries

Three separate pay schedule examples, A through C, are shown. Schedule A represents a hybrid schedule representative of the conventional YAHTZEE home game (some payoffs are fixed, some payoffs are variable and based on the dice values). Schedule B represents a fixed schedule of payoffs, and Schedule C represents a variable schedule of payoffs.

For each schedule assume the following rules are in effect for filling out the score card **590**. At any point in the game, each of the seven entries is either filled (with a zero or nonzero value) or empty. After each hand, the result must be input by the player into one and only one of the empty score card entries. If the hand does not qualify for that entry, it will be scored as zero (e.g., with only the "4 of a Kind" and "5 of a Kind" entries open, if the final hand value is 3-3-5-5-4, then a score of zero must be entered into one of the two remaining open entries). A "5 of a Kind" hand, if the "5 of a Kind" entry is filled (either with zero or a non-zero value), can substitute for any other open entry. A "5 of a Kind" hand, if subsequent to a previous "5 of a Kind" entry used as such could also earn an additional 100 point bonus.

EXAMPLE IV

The preceding rules and score card are illustrative and are not meant to limit the teachings of this invention.

Assuming X=5, Y=2, F=6, {S}: {1, 2, 3, 4, 5, 6}, and Z=7 hands, then the following values (in units) exist for these score card games of Table IV assuming optimal play: Schedule A=141.7 units, Schedule B=143.5 units, Schedule C=109.3 units. Hence, an underlying gaming machine initiates the bonus condition as discussed above. In this example, assume Schedule A and assume the player is paid an immediate bonus of 5 units for each visit to the score card, then the cumulative score card worth is 141.7+7×5=176.7 units. The score card bonus (average value 141.7 units) may be dispensed only upon completing the entire score card. If it is desired to have the score card completed, on average, every 175 spins, then this can be accomplished in several ways. For example, the underlying game **500** can initiate one hand of the bonus game, on average, every 25 spins. In this fashion, the player requires 7 visits to the score card **590** to complete it. The bonus game is played "in parallel," with play of the underlying game **500** and the player is thus encouraged to continue playing the underlying machine **500** in order to finish the parallel bonus game **10**. Alternatively, the underlying game can initiate seven hands of the bonus game **10** (thus allowing the player to fill the score card **590** completely) every 175 spins. Other means, including randomly selecting Z or how many hands to play on each visit to the score card, are variations.

In FIG. **7** the functional flow chart for playing Z hands of the bonus game **10** of the present invention is set forth. It is to be understood that with the computer-based design of the underlying game **500**, that this functional set of steps can be programmed to interface with the switches **510**, **350** and **310**, the dice **20**, the score card display **590**, the display for the payoff table **230** (if any), etc. In FIG. **7**, in typical fashion, a player initiates the play in stage **700** of the underlying game **500**. The player plays the underlying game **500** and a bonus condition **710** initiates as discussed above. This causes stage **720** to be entered which starts the first hand and, as before, with reference to FIGS. **4** and **5**, play of a hand of a bonus game **10** occurs. Hence, in stage **730**, the dice **20** are rolled, in stage **740**, the player makes a hold decision by selectively activating switches **310**. In stage **750**, a decision as to whether or not the hand is over which involves the steps previously discussed of stages **440**, **470**, **480**, and **490** occurs. Hence, re-rolling occurs through loop **752**. Eventually, and as taught above, the hand is over and stage **760** is entered. In FIG. **8**, the details of one possible variation for the score card **590** is shown. It is to be

understood that in FIG. **5**, a separate payoff table **230** is not needed in the play of this version of the method of the present invention. The score card **590** shows the winning combinations **800**, the payoff values **810** for each hand and provides a touch and display area **820**. Also the score card **590** provides a display **830** for displaying the total bonus payout award after the end of, in this example, seven hands.

In stage **760**, the player has just obtained the results of a hand, in a manner as discussed with respect to FIGS. **1** through **5**. Assume the results are: 3, 3, 3, 4, 4 (corresponding to dice **20**A, **20**B, **20**C, **20**D, and **20**E, respectively) which corresponds to a winning combination **800** of a FULL HOUSE which results in a payout **810** of 25 units. In stage **760**, the system waits for the player to select the proper entry in the score card which would be entry **830** in this example and the player touches the area and the payoff **832** of 25 is displayed. Stage **770** is entered to determine whether or not the game is over. This stage **770** simply counts the number of hands and if, in this example, Z=7, the game is over. However, if the hands are not yet completed, then stage **700** is re-entered and the process repeats. Assume, in the next hand, stage **760** is entered with the results of a hand being: 6, 3, 3, 1, and 4. This roll of the dice for the hand only matches the chance entry and the player has the option of pressing area **850** to enter the sum of this roll which is seventeen and is shown by **852**. Assume in the next hand, the results of the final roll are 5, 4, 3, 2, and 1. This is a large straight and the player would touch area **860** and the bonus award of 40 (as shown by **862**) would appear. Assume the next hand the player receives in stage **760** is 6, 5, 4, 3, 2, which is another large straight. The player, at this point in time, has the option of entering this as a small straight by touching area 870 and the bonus payment of 30 (as shown by **872** would be shown. The next hand, however, when entering stage **760** is 1, 3, 5, 6, 1, and there is no opportunity to match an entry **800**. However, the player must make an entry so the player selects "5 of a Kind" and touches area **880** causing a zero to be entered. In the next hand, the player receives 2, 2, 1, 1, 3, and the player selects area **890** again causing a "zero" **892** to be entered. In the final roll of the Z hand bonus game, in stage **760**, the player in this illustration receives 4, 4, 4, 1, 2, and touches area **840** causing the sum of fifteen **842** to be entered. Seven hands have now been played and in stage **770** this is detected, causing the system to enter stage **780** and all of the bonus awards are added together and displayed in area **830** as, in this illustration, 127 units which is then paid to the player. The Z hand bonus game is now over in stage **790**. It can be observed, that this bonus game according to the method of the present invention is played in parallel with a number of games in the underlying gaming machine.

In an alternate version, the player may be given the option to "reset" the game, for example if unhappy with its progress.

In an alternate version, the player initiates a stand-alone casino game **10** by wagering **260** a prescribed number of units. Each of the above poker hands are assigned a value. Thereafter, a total of Z hands are played. After each hand, a score card is updated and points are assigned based on the value of said hand. Once Z hands are played, the player's total points are compared to a payoff table **230** and the wager resolved.

In an alternate version, suitable for both stand-alone and bonusing designs, Z hands are played and after each hand, the value of the player's hand is compared to a payoff table and the player is immediately rewarded, as applicable, based on the value of the hand.

In an alternate version, Z hands are played and the player, to continue to the next hand, must make an additional wager.

Clearly, the number of entries **840–860** in the score card, and the types of hand they represent and their pay table **230** values, are a design choice. The examples given above are meant to be illustrative and do not limit the method of the present invention in any way. Other types of hands could include "5 of a Kind" of a certain type (e.g., 4s), hands achieved on certain rolls (e.g., the 1st roll), hands achieved with certain replacements (e.g., Full House replacing one), Chance hands of a certain value (e.g., sum of dice at least 20), and so forth.

Also, the method and timing by which the awards are distributed (e.g., all at once, only upon completion of score card **590**, etc.) are also a design choice and the foregoing description is not meant to limit the possibilities.

Finally, in the example shown in FIGS. **7** and **8**, the number of hands Z equals the number of entries in the score card. In other words in the example Z=7, there were 7 entries. The present invention is not limited to the value of Z equaling the number of entries. For example, Z could be more than the number of entries **840–850**. An example of this would be where Z=10 hands and 7 entries appear in the score card **590**. In this alternate version, a player would have three hands, in the player's discretion, where the player is not forced to enter into the score card **590**. Such an arrangement improves the player's ultimate payoff. Furthermore, the value of Z could be less than the number of entries. As an illustration of this, Z could be 5 and the player would have to fill in 5 of the 7 entries. Hence, the present invention is not limited to the value of Z equaling the number of entries **840–850** and can be more or less than that value.

In addition, in the preferred embodiment, the player is awarded a bonus value, such as five units, every time a hand is played. In the preferred embodiment, this is a fixed value. It could slide up or slide down with each hand, or simply not be paid. This payment to the player upon playing a hand further encourages the player to stay and play the entire bonus game. It is to be expressly understood that should a player decide to leave the underlying game before the Z hands of the bonus game are played. In that event, the player upon cashing out, the bonus game is reset to start over. The player may or may not be paid for cashing out.

b. Other Alternatives

In another casino game **10** embodiment, after each roll, the player may "hold" any or all of the dice **20** and re-roll the others, but once a die has been "held," it can no longer be replaced. In the example of Table II, the player P has the option of re-rolling any of the five dice **20** even if some of the five dice were held in the prior re-roll. In this alternate embodiment, once dice are held, they are held until the game is completed. This can be typically done by having the dealer D, for example in FIG. **2**, place the held dice in a separate area within play area **240** or even in a separate tray, not shown, on table **200**.

In an alternate embodiment, additional hand values are allowed, which are not traditional to poker. For example, a hand of "Two Trips" (e.g., 3 Fours and 3 Fives) or a "Chance" hand in which the player may adopt to use the sum of the dice rather than their poker value. The "Chance" hand may be required to have some minimum value.

In an alternate embodiment, replacement is not allowed. Thus, there is no skill involved and the outcome of the roll of X dice is simply compared to a paytable **230**.

In an alternate embodiment, the player wagers against the house, and each side develops a hand. The house plays by a

fixed set of rules. Once both hands are completed, their respective values are compared to determine the winner. This embodiment may be played one hand at a time or in sets of Z hands at a time.

In an alternate embodiment, the player wagers against another player, and each side develops a hand. Once both hands are completed, their respective values are compared to determine the winner. This embodiment may be played one hand at a time or in sets of Z hands at a time.

In an alternate embodiment, a specific value of the dice (e.g., "one") assumes a wildcard value and substitutes for any other value. For example, a hand of "One-Four-Five-Six" would be considered a Small Straight.

In an alternate embodiment, the results of successive games may be used in the pay table **230**. For example, a hand of "5 of a Kind" may be worth 100 units, but if achieved back-to-back might be worth 10,000 units, and so forth.

In an alternate embodiment, the casino game **10** may be tied to a wide area progressive. This may be used in conjunction with the results of successive games (e.g., back-to-back games with a "5 of a Kind" may qualify the player for the progressive amount, etc.).

5. Methods of the Present Invention

In the casino game **10** of the present invention, novel methods for playing a dice game having X dice **20**, each of the X dice having F faces **30** with a different symbol thereon so as to form a set {S} of symbols on each of X dice **20** whether the casino game **10** is stand-alone or a bonus game. One of the many methods taught herein for such game, whether on a table or embedded in a computer-based system, comprises the steps of:

(a) placing a wager **260**, (In the preferred method, the player places a wager to play the game of the present invention. In other methods, the player plays an underlying game hand wins a game payoff GP which becomes the wager, at the player's option, to play the bonus game of the present invention. In still other methods of the present invention, the wager may be zero or not placed at all and the payoff for the game of the present invention is based upon the playing of an underlying game not the game of the present invention. The funding for the game of the present invention, in these methods, being based upon the overall house advantage of the combined games.)

(b) rolling the set of X dice, (It is to be expressly understood that the dice **20** can be conventionally rolled as shown in FIG. **2** in a play area **240** or that they can be mechanical dice such as illustrated in FIG. **3**, or graphic representations of dice in a video screen, not shown. Any equivalent method could be used under the teachings of the present invention to roll the dice. Furthermore, any suitable number can be utilized for X.)

(c) holding none, any, or all of the rolled set of X dice, (The dice can be held in the case of conventionally rolled dice as shown in FIG. **2** by the player simply picking up and re-rolling the selected dice and not the held dice, or the dealer D can set the held dice aside, or a player in the case of mechanical or video dice, shown in FIG. **3**, can hold selected ones of the mechanical rolled or video displayed dice **20** by selectively activating buttons **310** or touching a touch-screen video monitor. It is to be expressly understood that any suitable equivalent technique could be used to hold the dice.)

(d) re-rolling the non-held dice in the set of X dice, (As shown in FIG. **2**, the player can simply re-roll the non-held dice in area **240** and in the case of the game in FIG. **3**, non-held dice can be re-rolled by pushing button **350**. It is to be expressly understood that any equivalent method of re-roll of the non-held dice could be utilized under the teachings of the present invention.

(e) repeating steps (c) and (d) Y times to complete a hand,

(f) awarding any winning combinations of symbols in the set {S} of X dice when the player holds all dice after a roll or when Y re-rolls have occurred.

Variations on the above method have been presented herein. For example, Z hands can be played wherein upon completion of any hand, an entry can be made into a score card so that at the end of Z hands, the player receives an overall bonus payoff based upon entries from each hand. In addition, the following two versions can be implemented based upon these methods.

a. "Take a Chance on Me"

The "Take a Chance on Me" version of the present invention requires no strategic skill on the part of the player. This version is pure chance. In this version of the method of the present invention X=5, Y=0,=6, {S}={1,2,3,4,5}. The player places a wager and then engages in a series of rolls of dice **20**. The game ends when one of the following hands arises:

TABLE V

Winning Combination	Payoff
5-of-a-Kind 6s	1000
5-of-a-Kind 5s	500
5-of-a-Kind 4s	400
5-of-a-Kind 3s	300
5-of-a-Kind 2s	200
5-of-a-Kind 1s	100
5-dice Straight	60
4-of-a-Kind	50
Full House	40
3-of-a-Kind	30
4-dice Straight	20

Upon beginning the bonus game **10**, a "bonus multiplier" initiates at 1×. For every roll (of the 5 dice **20**) in which Chance is achieved (i.e., none of the above winning combinations in Table V occurs), the bonus multiplier is incremented by 1×. Upon ultimately rolling one of the above hands in Table V, its associated payoff is multiplied by the bonus multiplier to determine the game award.

For example, the game begins with a bonus multiplier of 1×. The first roll is 2-3-4-4-6. Since this is a Chance hand, the multiplier increments to 2×. The next roll is 4-4-5-5-1. Since this is a Chance hand, the multiplier increments to 3×. The next roll is 2-3-4-5-6. Since this is a 5-dice Straight (Large Straight), the game is over. The total award is 3×60=180 units.

The frequencies of each type of hand can be obtained via combinatorial analysis:

TABLE VI

Combination	Probability
5-of-a-Kind 6s	1 in 7776
5-of-a-Kind 5s	1 in 7776
5-of-a-Kind 4s	1 in 7776
5-of-a-kind 3s	1 in 7776
5-of-a-Kind 2s	1 in 7776
5-of-a-Kind 1s	1 in 7776

TABLE VI-continued

Combination	Probability
5-dice Straight	240 in 7776
4-of-a-Kind	150 in 7776
Full House	300 in 7776
3-of-a-Kind	1200 in 7776
4-dice Straight	960 in 7776
Chance	4920 in 7776

From the above figures, an average value, per game is 87.3 units.

What has been described in this version of the method of the present invention is a method for playing a dice game having X dice, each of the X dice having F faces, and each face F having a unique symbol placed thereon. The dice are then rolled by a player. The method then determines whether a winning combination exists in the rolled X dice. If a winning combination exists in the rolled dice, the multiple value is incremented by one (or any suitable amount) and the dice are re-rolled. On the other hand, if a winning combination exists in the rolled dice, the game ends and the player is awarded a payoff from the payoff table for the winning combination multiplied by the multiple value and the game is over. This game can be played either as a stand-alone game or as discussed above can be initiated when a bonus condition is generated. It is to be expressly understood that the payoff table, the winning combinations, and the payoffs set forth above are only an example and that many variations are possible. Though the above embodiment has been illustrated with specific pay table values, hand types, and five six-sided dice, other manifestations are possible. The explicit details are meant to be illustrative and not limiting the scope of the invention. Further this version of the method of the present invention can be implemented as a table game, in a gaming machine, as a bonus to a table game, or as a bonus to a gaming machine.

b. "Leave Nothing to Chance"

The "Leave Nothing to Chance" version of the present invention requires skill and potentially results in several hands. In this game, the player plays Z hands of poker dice and tries to avoid obtaining a Chance hand. With proper play, the player has approximately a 6/7 probability of avoiding Chance, hence the game generally lasts several hands. Should the player avoid Chance for 7 successive hands, the player is awarded a 50 unit bonus. Consider the following pay table:

TABLE VII

Winning Combination	Payoff
5-of-a-Kind 6s	400
5-of-a-Kind 5s	80
5-of-a-Kind 4s	70
5-of-a-Kind 3s	60
5-of-a-Kind 2s	50
5-of-a-Kind 1s	40
4-of-a-Kind	20
5-dice Straight	15
Full House	12
3-of-a-Kind	8
4-dice Straight	5

The player begins with a win meter of 0. He plays a hand of poker dice (X=5, Y=2, F=6, {S}: {1, 2, 3, 4, 5, 6}). The outcome is compared to the pay table. If the outcome is Chance (i.e., a hand having a combination other than set forth in Table VII), the game is over and the win meter is awarded to the player. Otherwise, the winning combination payoff is added to the win meter.

For example, on the first hand (i.e., Z=1), the player rolls 1-2-4-4-6. The player keeps the 4-4 and re-rolls the other three dice. The new roll is 5-5-5. The player holds all five dice and is credited 12 for a Full House on the win meter. The win meter now reads 12.

On the next hand (i.e., Z=2), the player rolls 1-2-3-4-4. The player keeps the 1-2-3-4 and re-rolls the other die. The new roll is 3. The player re-rolls the odd die again. The new roll is 2. The player is credited 5 for a 4-dice Straight on the win meter, which now shows 17 (i.e., 12+5).

On the next hand (i.e., Z=3), the player rolls 1-2-3-3-2. The player keeps the 3-3 and re-rolls the other three dice. The new roll is 4-4-5. The player keeps the 4-4 and re-rolls the other three dice. The new roll is 2-2-3. The player has Chance, and hence, the game is over. The player is awarded the 17 units on the win meter.

With optimal play, the game is worth approximately 150 units. Though the above embodiment has been illustrated with specific pay table values, hand types, and five six-sided dice, other manifestations are possible. The explicit details are meant to be illustrative and not limiting the scope of the invention. Further this version of the method of the present invention can be implemented as a table game, in a gaming machine, as a bonus to a table game, or as a bonus to a gaming machine.

A method has been presented under this version of the present invention for a player to play a dice game. The player plays a predetermined number Z of hands in the dice game. Each hand has the following steps. The dice are rolled and the player holds none, any, or all of the rolled dice. A hand ends when re-rolling occurs a predetermined number of times or when the dice are all held by a player. If less than all of the dice are held, re-rolling of the dice occurs and the process of re-rolling, as fully described above, occurs a predetermined number Y of times. At the end of a hand, if a winning combination is found in the dice according to a pay table, the corresponding payoff for that winning combination is accumulated in a payoff meter, as discussed above, and the value of Z is incremented by a suitable value such as one. Each hand is played in this fashion. However, the game ends when a predetermined number of Z hands occurs or when a chance hand (i.e., a hand resulting in a rolled dice combination not found in the pay table occurs). When the game ends, the player is awarded based upon the accumulated payoffs. It is to be expressly understood that the payoff table, the winning combinations, and the payoffs set forth above are only an example and that many variations are possible. Again, this version of the game of the present invention can be a stand-alone game either as a table game, in a gaming machine, or as a bonus game in which case the game is initiated when a bonus condition arises from the underlying game.

It is to be expressly understood that while the many versions of the methods of the present invention have been set forth in the above, that these methods can also be implemented in personal computers such as home-based computers or computers located in rooms at a casino or elsewhere in a casino. In which case, all of the computers would be interconnected over a communications network as is commonly done through the Internet or networks in general.

The above disclosure sets forth a number of embodiments of the present invention. Those skilled in this art will however appreciate that other arrangements or

embodiments, not precisely set forth, could be practiced under the teachings of the present invention and that the scope of this invention should only be limited by the scope of the following claims.

We claim:

1. A method for a player to play a bonus casino game with an underlying casino game, the bonus casino game having X dice, each of the X dice having F faces with a different symbol thereon so as to form a set {S} of symbols on each of the X dice, said method comprising the steps of:

(a) generating a bonus condition in the underlying casino game,

(b) rolling all X dice in response to the step of generating the bonus condition,

(c) holding none, any, or all of the rolled dice in response to hold input from the player,

(d) ending the bonus casino game for the player when re-rolling occurs Y times, the value of Y being two or greater,

(e) always awarding the player for any combination of symbols in response to the step of ending the game wherein the step of awarding pays the player a payoff in a payoff table having a plurality of winning combinations and associated payoff values,

(f) re-rolling the non-held dice when less than all the X dice are held by the player, and

(g) repeating steps (c) through (f) until the step of ending the bonus game occurs.

2. The method of claim **1** wherein the step of ending the casino game ends the game when all dice are held by the player in the step of holding.

3. The method of claim **1** wherein X=5, F=6, {S}={1, 2, 3, 4, 5, 6}.

4. The method of claim **1** wherein X=5, F=6 and {S}={A, K, Q, J, 10, 9}.

5. The method of claim **1** wherein X=5, F=6, the set {S}={A, K, Q, J, 10, 9} with each member of {S} a unique suit.

6. The method of claim **1** wherein the bonus initiation game condition is at least one symbol occurring during play of the underlying casino game.

7. The method of claim **1** wherein the bonus initiation game condition is the occurrence of a random event unrelated to the play of the underlying casino game.

8. The method of claim **1** wherein the bonus initiation game condition is when at least one payoff condition occurs in the underlying casino game.

9. The method of claim **1** wherein the bonus initiation game condition occurs when an accumulated value occurs in play of the underlying casino game.

10. The method of claim **1** wherein the bonus initiation game condition occurs when (1) a separate wager is made in addition to the wager of the underlying game and (2) a condition occurs in the underlying casino game.

11. The method of claim **10** wherein the bonus initiation condition is a predetermined winning combination.

12. The method of claim **11** wherein the bonus initiation condition is the occurrence of at least one symbol.

13. The method of claim **1** wherein after each bonus casino game the points obtained in the roll of the dice are added to the points obtained in the prior bonus game and wherein the award is based upon accumulated points.

14. The method of claim **1** wherein the value of Y is randomly selected before the bonus game starts.

15. The method of claim **1** wherein the value of Y is incremented by a randomly appearing symbol in the underlying casino game.

16. The method of claim **1** wherein the value of Y is controlled by play of the underlying casino game.

17. The method of claim **1** wherein the underlying casino game is a gaming machine and wherein the step of generating a bonus initiation game condition includes the steps of:

producing a signal to the player when a game condition occurs,

receiving an input from the player to play the casino bonus game.

* * * * *