US009117341B2

(12) **United States Patent**
Marantelli

(10) **Patent No.: US 9,117,341 B2**
(45) **Date of Patent: *Aug. 25, 2015**

(54) **WAGERING APPARATUS, METHODS AND SYSTEMS**

(71) Applicant: **Diogenes Limited**, Douglas (IM)

(72) Inventor: **Bernard J. Marantelli**, London (GB)

(73) Assignee: **Diogenes Limited** (IM)

(*) Notice: Subject to any disclaimer, the term of this patent is extended or adjusted under 35 U.S.C. 154(b) by 0 days.

This patent is subject to a terminal disclaimer.

(21) Appl. No.: **14/275,136**

(22) Filed: **May 12, 2014**

(65) **Prior Publication Data**

US 2014/0256414 A1 Sep. 11, 2014

Related U.S. Application Data

(63) Continuation of application No. 13/958,028, filed on Aug. 2, 2013, now Pat. No. 8,721,439, which is a continuation-in-part of application No. 13/605,813, filed on Sep. 6, 2012, now Pat. No. 8,602,884.

(51) **Int. Cl.**

A63F 9/24	(2006.01)
A63F 13/00	(2014.01)
G06F 17/00	(2006.01)
G06F 19/00	(2011.01)
G07F 17/32	(2006.01)
G06Q 50/34	(2012.01)

(52) **U.S. Cl.**

CPC ***G07F 17/3244*** (2013.01); ***G06Q 50/34*** (2013.01); ***G07F 17/32*** (2013.01); ***G07F 17/3258*** (2013.01); ***G07F 17/3288*** (2013.01); *G07F 17/3255* (2013.01)

(58) **Field of Classification Search**

USPC 463/20, 22, 25, 28, 40, 42

See application file for complete search history.

(56) **References Cited**

U.S. PATENT DOCUMENTS

7,811,164	B1	10/2010	Fox
7,883,403	B2	2/2011	Low et al.
7,901,281	B2	3/2011	Breslo
7,942,735	B2	5/2011	Meyer et al.
7,963,838	B2	6/2011	Gauselmann
8,105,149	B2	1/2012	DeWaal
8,602,884	B1	12/2013	Marantelli
2003/0040360	A1	2/2003	Kaminkow
2003/0078093	A1	4/2003	Simms et al.
2005/0116410	A1	6/2005	Vlazny et al.
2006/0237905	A1	10/2006	Nicely et al.

(Continued)

FOREIGN PATENT DOCUMENTS

AU	2011205028	A1	8/2011

OTHER PUBLICATIONS

Written Opinion and International Search Report issued on Sep. 4, 2014 in corresponding International Application No. PCT/IB2013/002965.

(Continued)

Primary Examiner — Adetokunbo O Torimiro

(74) *Attorney, Agent, or Firm* — DLA Piper LLP (US)

(57) **ABSTRACT**

A system, method and apparatus provides a unique betting product where players make selections in one or more different events. Players who are in contention to win may be offered an opportunity to sell their tickets, in whole or in part, in response to a full or partial buy-out offer made at any time prior to completion of a wagering event.

40 Claims, 5 Drawing Sheets

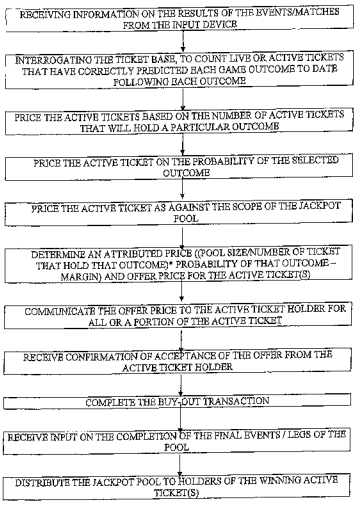

(56) **References Cited**

U.S. PATENT DOCUMENTS

2008/0153579	A1	6/2008	Brenner et al.	
2011/0136566	A1 *	6/2011	Acres	463/22

OTHER PUBLICATIONS

GB Patent Application No. 1215708.7 filed Sep. 4, 2012 with Filing Receipt.

International Search Report and the Written Opinion of the International Searching Authority dated Jan. 24, 2014 for International Application No. PCT/IB2013/002377.

International Search Report and the International Written Opinion dated Apr. 24, 2014 for corresponding International Application No. PCT/IB2013/002962.

International Search Report and the International Written Opinion dated Apr. 25, 2014 for corresponding International Application No. PCT/IB2013/003028.

International Preliminary Report on Patentability issued on Mar. 10, 2015 in corresponding International Application No. PCT/IB2013/002962.

International Preliminary Report on Patentability issued on Mar. 10, 2015 in corresponding International Application No. PCT/IB2013/002377.

International Preliminary Report on Patentability issued on Mar. 19, 2015 in corresponding International Application No. PCT/IB2013/002965.

International Preliminary Report on Patentability issued on Mar. 19, 2015 in corresponding International Application No. PCT/IB2013/003028.

* cited by examiner

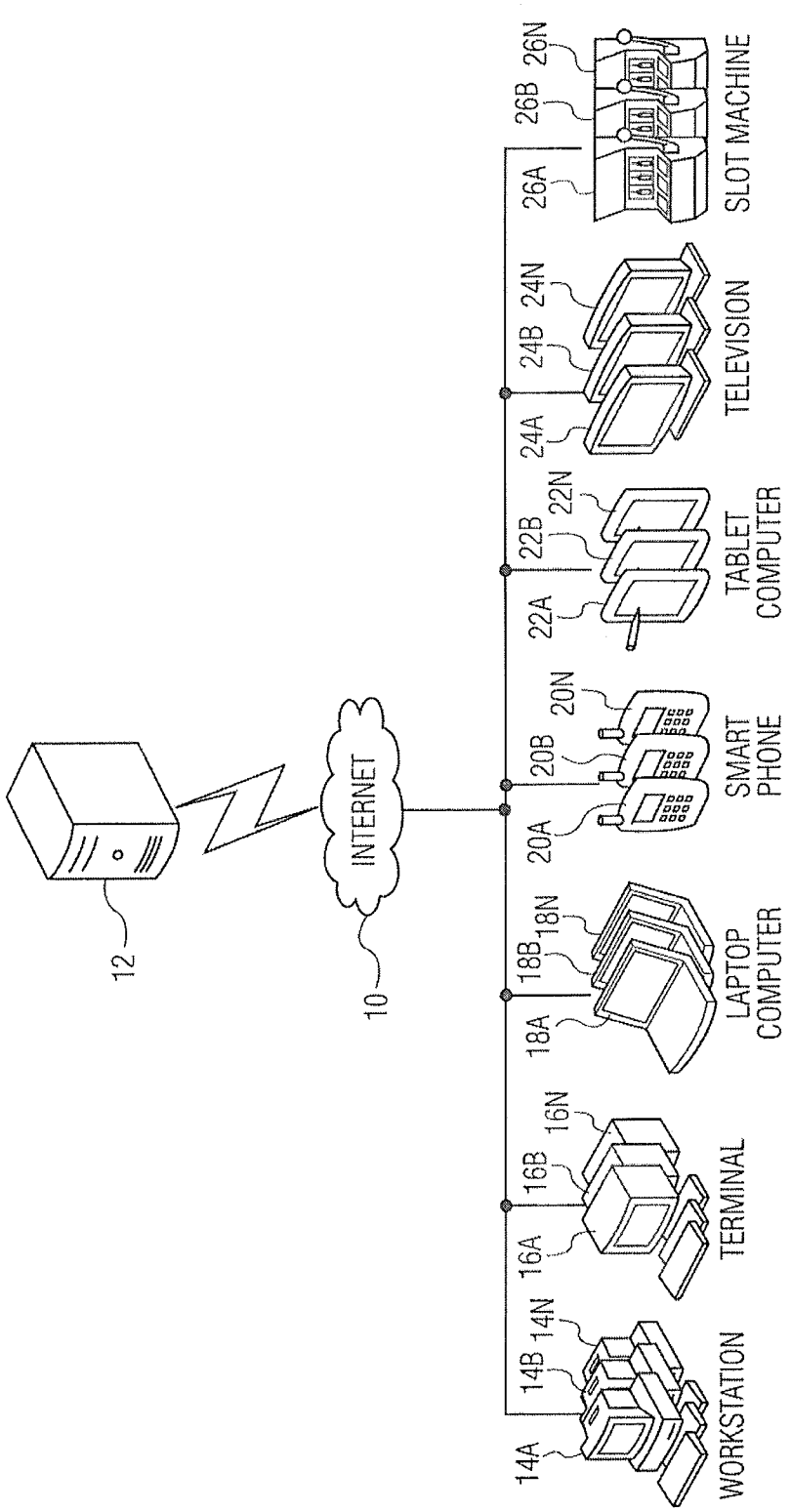
12
10
INTERNET
14A
14B
14N
WORKSTATION
16A
16B
16N
TERMINAL
18A
18B
18N
LAPTOP COMPUTER
20A
20B
20N
SMART PHONE
22A
22B
22N
TABLET COMPUTER
24A
24B
24N
TELEVISION
26A
26B
26N
SLOT MACHINE

FIG. 1

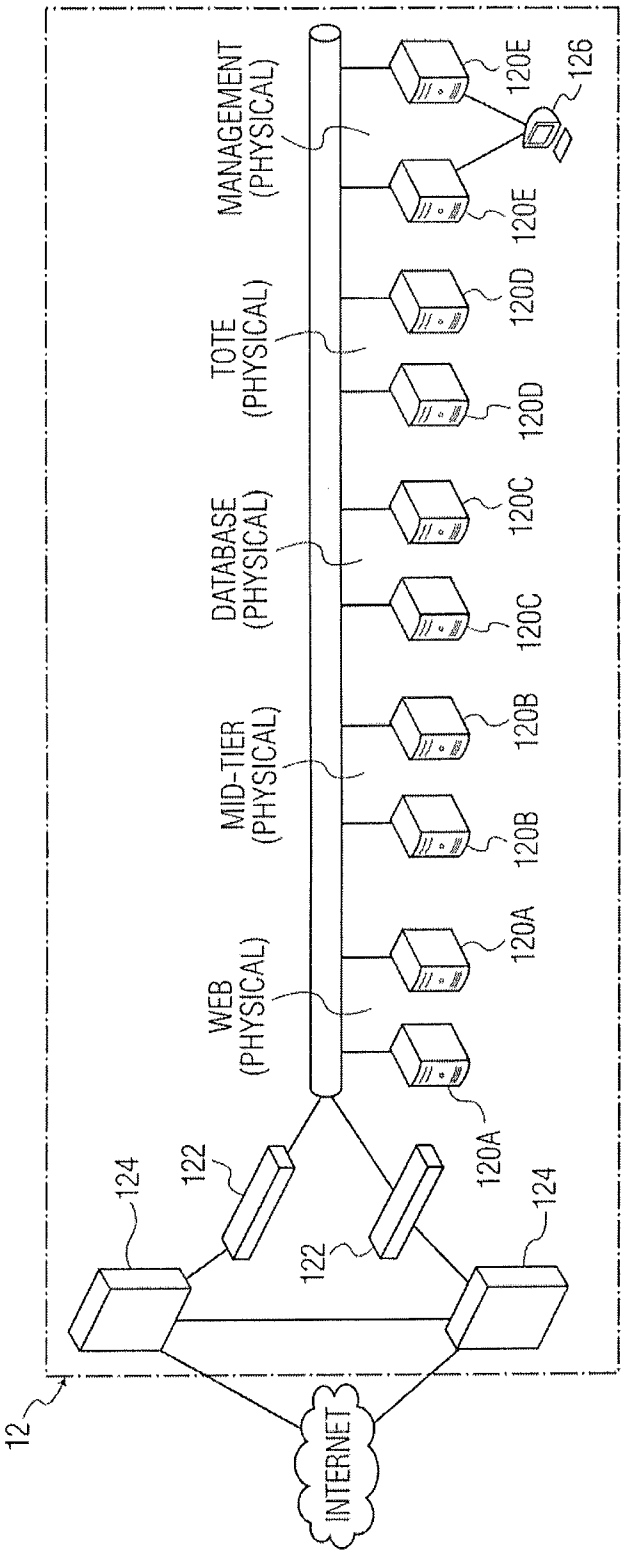
12
INTERNET
124
122
122
124
WEB (PHYSICAL)
MID-TIER (PHYSICAL)
DATABASE (PHYSICAL)
TOTE (PHYSICAL)
MANAGEMENT (PHYSICAL)
120A
120A
120B
120B
120C
120C
120D
120D
120E
120E
126

FIG. 2

FIGURE 3

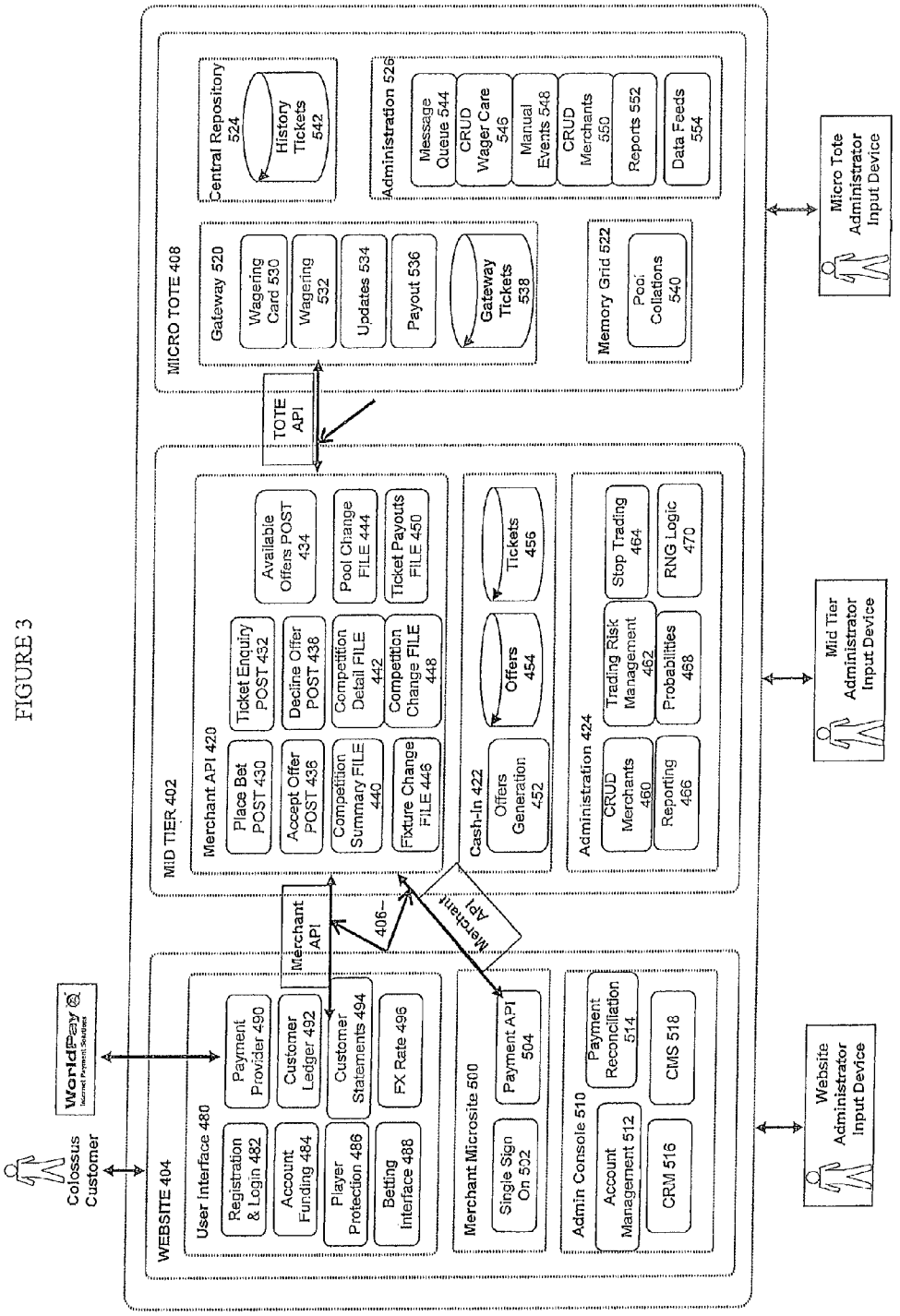
Colossus Customer
WorldPay
WEBSITE 404
User Interface 480
Registration & Login 482
Account Funding 484
Player Protection 486
Betting Interface 488
Payment Provider 490
Customer Ledger 492
Customer Statements 494
FX Rate 496
Merchant API
406
Merchant Microsite 500
Single Sign On 502
Payment API 504
Merchant API
Admin Console 510
Account Management 512
CRM 516
Payment Reconciliation 514
CMS 518
MID TIER 402
Merchant API 420
Place Bet POST 430
Accept Offer POST 436
Competition Summary FILE 440
Fixture Change FILE 446
Ticket Enquiry POST 432
Decline Offer POST 438
Competition Detail FILE 442
Competition Change FILE 448
Available Offers POST 434
Pool Change FILE 444
Ticket Payouts FILE 450
Cash-In 422
Offers Generation 452
Offers 454
Tickets 456
Administration 424
CRUD Merchants 460
Reporting 466
Trading Risk Management 462
Probabilities 468
Stop Trading 464
RNG Logic 470
TOTE API
MICRO TOTE 408
Gateway 520
Wagering Card 530
Wagering 532
Updates 534
Payout 536
Gateway Tickets 538
Memory Grid 522
Pool Collations 540
Central Repository 524
History Tickets 542
Administration 526
Message Queue 544
CRUD Wager Care 546
Manual Events 548
CRUD Merchants 550
Reports 552
Data Feeds 554
Website Administrator Input Device
Mid Tier Administrator Input Device
Micro Tote Administrator Input Device

FIGURE 4

	2006-07	2007-08	2008-09	2009-10	2010-11	2011-12		5 Year Ave
ENG PREMIER LEAGUE	2.45	2.64	2.48	2.77	2.8	2.8		2.66
ESP LA LIGA	2.48	2.69	2.9	2.71	2.74	2.77		2.72
ITA SERIE A	2.55	2.55	2.6	2.61	2.51	2.56		2.56
GER BUNDESLIGA	2.74	2.81	2.92	2.83	2.92	2.87		2.85
FRA LIGUE 1	2.25	2.28	2.26	2.41	2.34	2.47		2.34
EUR CHAMPIONS LEAGUE	2.49	2.64	2.63	2.54	2.84	2.77		2.65
WORLD CUP	2.21	2.71	2.67	2.52	2.3	2.27		2.45

FIGURE 5

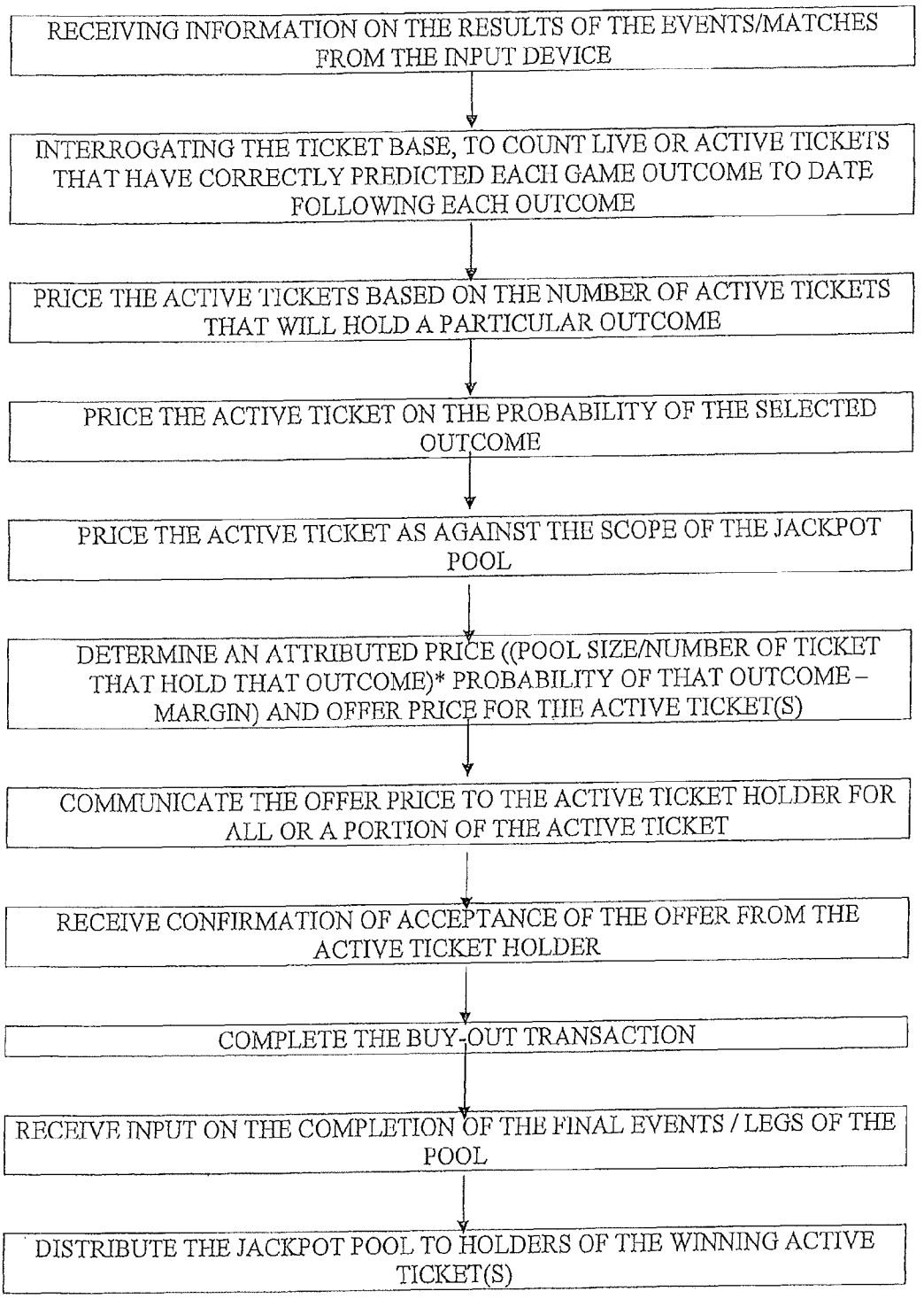
RECEIVING INFORMATION ON THE RESULTS OF THE EVENTS/MATCHES FROM THE INPUT DEVICE
INTERROGATING THE TICKET BASE, TO COUNT LIVE OR ACTIVE TICKETS THAT HAVE CORRECTLY PREDICTED EACH GAME OUTCOME TO DATE FOLLOWING EACH OUTCOME
PRICE THE ACTIVE TICKETS BASED ON THE NUMBER OF ACTIVE TICKETS THAT WILL HOLD A PARTICULAR OUTCOME
PRICE THE ACTIVE TICKET ON THE PROBABILITY OF THE SELECTED OUTCOME
PRICE THE ACTIVE TICKET AS AGAINST THE SCOPE OF THE JACKPOT POOL
DETERMINE AN ATTRIBUTED PRICE ((POOL SIZE/NUMBER OF TICKET THAT HOLD THAT OUTCOME)* PROBABILITY OF THAT OUTCOME – MARGIN) AND OFFER PRICE FOR THE ACTIVE TICKET(S)
COMMUNICATE THE OFFER PRICE TO THE ACTIVE TICKET HOLDER FOR ALL OR A PORTION OF THE ACTIVE TICKET
RECEIVE CONFIRMATION OF ACCEPTANCE OF THE OFFER FROM THE ACTIVE TICKET HOLDER
COMPLETE THE BUY-OUT TRANSACTION
RECEIVE INPUT ON THE COMPLETION OF THE FINAL EVENTS / LEGS OF THE POOL
DISTRIBUTE THE JACKPOT POOL TO HOLDERS OF THE WINNING ACTIVE TICKET(S)

WAGERING APPARATUS, METHODS AND SYSTEMS

BACKGROUND

There are a range of betting and lottery products in the market. For example, there are pure pool betting products, such as the Pick 6 horse racing product in the United States and the Scoop 6 racing product (among others) in the United Kingdom. There are also sports betting products such as soccer individual games and/or pool wagering products. Pick 6 and Scoop 6 provides a six leg jackpot type bet that may also include a bonus pool and consolation prizes. The product type is relatively successful and provides players with a chance to win a large sum by betting on six races on a given race day. Similar multiple leg pool wagering is allowed for other types of racing events and multiple sports events.

In the United Kingdom, there also presently exists a free to play game offered by Skybet, the 'Super 6' whereby players are allowed to make just one set of soccer correct score selections to try to win a guaranteed payout. The Super 6 also has some similarities to the traditional soccer pools product but is different in that it is not predicting draws and only six selections are necessary. Many countries have similar pool products where players are asked to select winners in six or seven horse or dog races and can win a share of a large pool. In the United States, numerous states have lotteries where players select for example six numbers and purchase a lottery ticket for a specific drawing. There is also a "Mega Millions" game in which several states participate in a pooled jackpot. The correct selection of all six numbers allows the ticket bearer to claim all or a portion of the pooled jackpot, depending on the number of winning tickets.

The traditional soccer pools products in the United Kingdom offer a large payout if the player can select a large number of matches that result in a draw—particularly a score draw. Within soccer betting, correct score betting is the second most popular market after the central Home/Draw/Away ("H/D/A") markets. A prominent United Kingdom based betting and gaming company recently reported that 84% of its retail (i.e. in betting shops) soccer bets were coupon based accumulators. Almost 90% of those are on four-fold and above. A four-fold is four selections, so 90% of the bets are on four selections and more. By comparison, in online betting, twice as many bets are singles as is the case in betting shops, and only 55% are four-fold and above.

Within this market segment, there is a need for new products to generate and maintain consumer interest.

SUMMARY

The present disclosure is directed to a market gap for the creation of a unique betting product where players make selections in a number of different legs which, as defined below, can include any of a variety of different discrete events (e.g., an auto race), partial events (e.g., an inning of a baseball game, a set in tennis), components of events (e.g., one or more at bats by a particular player in baseball game or numbers selected in a particular position in a lottery drawing), multiple independent events (e.g., two football games that may occur sequentially or concurrently) and/or compilations of events (e.g., a championship series). Those players who correctly select all (or some predefined portion) of the winners of each leg have an opportunity to solely obtain and/or share in the proceeds of the stakes of all the other players, less any applicable deduction to cover operating costs and/or operator profit, and have the opportunity to win a prize. For example,

in multi-leg event pools, prizes may include without limit a full or fractional portion of a Jackpot Pool (e.g., for all correct selections), potentially a Bonus Pool (e.g., for one additional outcome the following week, game, or event) and/or a possible Consolation Pool (e.g., for a subset of correct selections, or other pre-defined forms of partial correctness, such as, for example: did a horse place for consolation, rather than win for jackpot). As another example, if the multi-leg event accommodates accumulator or parlay wagering, the players that correctly select the outcomes of each leg (or any other number of designated legs, for instance) have an opportunity to solely obtain and/or share one or more prizes.

In either case, if no player selects a correct winning combination of results, as one example, the amounts staked available to win may be carried forward until a next betting cycle, for example the next week, and may be available to win by anyone selecting a correct combination of outcomes, or alternatively all or any portion of the amounts staked available to win may be retained by an operator or other designated entity. As should be understood, although not explicitly disclosed herein, there are many other outcome for how the amounts staked available to win may be handled and/or disposed of, and should be considered incorporated herein.

However, to ensure that a significant prize is available in the first cycle or first week or after a prize is claimed, in one example it is contemplated that there may be an operator guaranteed amount available to win each time the games are played, at least until significant reserves have been built up.

Notably, various implementations may be betting scenarios or alternatively in other implementations players may choose to play just for fun, where no stakes are actually wagered. A unique differentiator of the product of the present disclosure may be that at any desired time after initiation of an event (such as at any time after a "ticket" is purchased until completion of an event, after each leg has been completed, between legs, including potentially as a leg is "in-play", and/or during a designated span of time before, during and/or after any of the legs), any desired number of players who remain eligible for a prize (and potentially those still eligible for bonus and/or consolation prizes) or to win or have correct (win) predictions for each of the events or legs that are completed, may be offered a "buy-out" or an opportunity to sell their tickets (in whole or alternatively may be in part (i.e., a fractional amount) to the game operator or through the game operator (or alternatively directly) to a third party (e.g., one or more system operator(s), business entity or entities such as a merchant(s), one or more other persons, other player(s), etc.). Thus, for example, the game operator (or any other entity) may offer the player a fractional amount of the potential Jackpot Pool to buy the ticket for the still pending game(s) and thereby provide the player the opportunity to cash in and avoid the risk of being eliminated on a later leg or the final event. In other examples, a ticket held by players may be comprised of one or more divisions, and the buy-out offer or sale may involve just certain divisions of the ticket, so that those divisions are sold but the player retains ownership of the remaining divisions of the ticket. In yet another example, a ticket held by a player may include an accumulator or parlay wager, in which case the player may receive (or initiate) a buy-out offer or sale for a fractional amount of a prize (e.g., a jackpot), and which may occur at any time, such as before, during and/or after any of the legs specified by the wager have been completed.

In addition to the Jackpot Pool or final Jackpot, there are other pools that could form part of the pool game. Part of the amount staked could be reserved to provide one or more Consolation Pool(s) which may be won by those who cor-

rectly select a portion of the correct outcomes or another consolation scenario. As an example, a player may be eligible for a Consolation Pool by selecting "any 5" of a Breeder's Cup Pick 6 pool, 5 of 7 such as V75 (a Swedish multi-leg pool bet based on the sport of 'trotting'), or every selection "placed" in the event every selection did not win, as is the consolations in the UK scoop6. In addition, another part of the amount staked could be reserved to provide a Bonus Pool which will be available to winners of the main pool, if they are able to select additional outcomes after they have successfully won the Jackpot Pool. In addition, the players that correctly select the winners of any number of legs can also win one or more interim Jackpots that occurs prior to completion of the event. Thus, the amount staked for the various interim Jackpots would be different than the final Jackpot, which occurs where there is a winner(s) of the last leg that occurs at the end of the event. When either of these pools are offered, any purchaser of a ticket such as the operator discussed above would become the owner of the rights in the ticket with respect to the opportunity to win the Consolation Pool(s), interim Jackpot(s) or Bonus Pool.

BRIEF DESCRIPTION OF THE DRAWINGS

FIG. **1** is a schematic representation of a wagering system hardware and network connected to various wagering stations or wagering terminals and other devices which may be used in accordance with an aspect of the present disclosure.

FIG. **2** is a more detailed schematic representation of the wagering system hardware and network that controls the operation of the system of FIG. **1**.

FIG. **3** is a block diagram of the functional architecture of a program for the wagering system hardware of FIG. **2**.

FIG. **4** is a table depicting goal expectancy for six years across the main soccer leagues and the World Cup.

FIG. **5** is an exemplary flow chart of the logic of the software subroutine program of the central server system.

DETAILED DESCRIPTION

The present disclosure is directed to a new betting product developed for a wide range of applications, including any event where betting may be utilized or even scenarios where play is just for fun, such as, and without limitation, any type of actual or virtual sporting event or any type of game; for instance, one implementation may apply to the most globally bet upon sport in the world, soccer and specifically United Kingdom Premier League soccer. The concept, however, has more widespread applications and potential appeal, and thus it may be applied to other types of sporting events (i.e., American football, horse racing, car racing, hockey, baseball, basketball, lacrosse, wrestling, just as a few examples) as well as being expanded to other events such as games (both virtual and real), including but not limited to, virtual and real card games (e.g., jacks, poker, blackjack, Texas hold 'em, etc.), lotteries, racing, slot machines and other multi-leg/multi-events/multi-outcome or divisible games (such as games or sets in tennis, innings in baseball, etc.), or any combinations of desired events. Further, the betting product of the present disclosure is suitable for "betting for fun," which is betting with no actual stakes at risk.

FIG. **1** is a schematic of an exemplary wagering system hardware and network that will be used herein to describe and illustrate one implementation of the present disclosure. The system includes a network, including a system controller, for example, such as based on a central server system **12** being interconnected through the internet **10** to a plurality of wager input devices such as wagering stations **14**, wagering terminals (including self-service wagering terminals) **16**, and internet connected computing systems **18**, smart phones **20**, tablet computers **22** and televisions **24** each of which is representative of a plurality of each type of wager input device (e.g. wagering stations **14**A-N). As should be understood the term "system controller" should be broadly construed to comprise any hardware device or devices that includes at least one central processing unit (CPU) or other processing device and associated memory. As will also be discussed below, the concepts herein may also be applied to gaming machines, so gaming machine **26** is depicted as an additional input device to the central server system **12** in FIG. **1**. The term "leg" as used herein should be broadly construed and may comprise any desired number of individual components of any type of event, such as any type of game or sporting event. For example, and without limitation, a leg may comprise a sporting event in its entirety, such as a soccer game, American football game, horse race, car race, hockey game, baseball game, basketball game, lacrosse game, wrestling match, etc., any portion of a sporting event, such as an inning of baseball, a half of a soccer game, a single horse race, a quarter of an American football game, a single wrestling match, etc., an occurrence within an event or game, such as a particular player scoring a goal (e.g., in hockey or soccer) or a particular player getting a hit in a baseball game, or a combination of games or events such as the World Series in baseball or any other sports playoff series. In addition, as an example and without limitation, a leg may comprise any desired number of individual components of any game or a game in its entirety, virtual and real, such as, for instance, and without limitation, keno, jacks, poker, blackjack, Texas hold 'em, racing, video games (including live and online video games, as examples), slot machines and lotteries, etc. As one example, with respect to slot machines, a separate leg may correspond to each reel (whether virtual or mechanical), or any particular number or designated reels, of the slot machine. As another example, with respect to a lottery, a separate leg may correspond to each item, or any particular number or designated items, used to determine who may have won a given lottery, such as numbered balls. As another example, with respect to a card game (e.g., whether virtual or mechanical, etc.), a separate leg may correspond to each card, or any particular number or designated cards, that are played in a given card game. As should be understood, however, the amount and nature of the individual components that comprises a leg may vary widely in a given application as may be desired, such as ranging anywhere from one (i.e., an entire event) to a plurality of individual components (i.e., parts of an event, such as reels of a slot machine, numbers in a lottery, cards in a card game, portions of a game or sporting event, etc.).

The wager stations **14** and wagering terminals **16** of FIG. **1** are depicted in an exemplary only embodiments, but as known in the art they may include a support structure, housing or cabinet which provides support for a plurality of displays, inputs, controls and other features of a conventional wager terminal. The wagering stations **14** may be configured so that users can be the party placing a wager, while the wagering terminals **16** may be configured for an operator at a commercial location such as a store or betting facility. The wager stations **14** and wagering terminals **16** may be positioned on a base or stand or can be configured as a table-top which a user can operate preferably while sitting. The wagering stations **14** and wagering terminals **16** may further include a device for accepting a monetary value associated with a wager wherein the device may include, for example, a coin collector, a bill collector or a card reader. The wagering stations **14** and

wagering terminals **16** may further include one or more of a display, a card reader/writer and/or a ticket and/or voucher printer to visually display, store on a card and/or a player account(s), and/or print wager receipts and potentially vouchers representing cash-out values and successful play awards (e.g., an "award" or "awards" as defined herein shall be broadly construed and shall include, without limitation, a designated currency, virtual currency, tokens, credits, coupons, services, personal or real property, virtual property, assets, investments, negotiable instruments (such as checks), commodities, food, lodging, entertainment, alleviation of obligations, gaming opportunities, wager enhancement and/or any other benefit(s) or portions thereof that may be provided or otherwise offered to a player). The wagering stations **14** and wagering terminals **16** may also include a ticket or voucher reader and/or a dispenser for dispensing a monetary amount, such as, without limitation, cash, virtual currency and/or tokens, etc. For example, the ticket or voucher reader may be adapted to read and allocate credits or other value associated with a ticket or voucher to one or more players and/or player accounts. The bill collector, ticket or voucher reader and dispenser may be separate or integrated into a single sub-unit.

The wager stations **14** and wagering terminals **16** preferably include at least one processor, such as a microprocessor, a microcontroller-based platform, a suitable integrated circuit or one or more application-specific integrated circuits (ASIC's). The processor is in communication with or operable to access or to exchange signals with at least one data storage or memory device. The processor and the memory device reside within the cabinet. The memory device stores program code and instructions, executable by the processor, to control the wager stations **14** and wagering terminals **16** and communicate with the central server system **12**. The memory device also stores other data such as image data, event data, user input data, ticket tracking assignment generators, pay-table data or information and applicable rules that relate to the operation of the wager stations **14** and wagering terminals **16** and the particular type of buy-out method and process described herein.

It is also contemplated that an operator or a player can use a computing system **18**, such as a desktop computer, a laptop personal computer, a personal digital assistant (PDA) or smartphone **20**, portable tablet computing device **22**, or other computerized platform or interactive web-enabled television **24** to access the central server system **12** via a network, internet or intranet, so as to initiate a wager and access the collective wagering pool. In this implementation, it is contemplated the users' devices would also receive messages and the buy-out offers discussed below from the pool operator via the central server system **12**, so that the individual user could participate in the wagering system and buy-back option via the user's connected device.

It is contemplated that the wager stations **14**, wager terminals **16** and/or personal computing systems **18**, as well as the smart phones **20**, tablet computers **22** and televisions **24** disclosed herein may be operable over a wired or wireless network, such as part of a wired or wireless wagering system. In this embodiment, the computing systems **18** may be a hand held device, a mobile device or any other suitable wireless device that enables a user to participate in the pooled wagering system at any suitable location. It is contemplated that the computing systems **18** or at least the server system as disclosed herein may be a device that has obtained approval from a regulatory agency or commission or a device that has not obtained or require approval from a regulatory agency or commission. FIG. **2** is a more detailed schematic representation of the wagering system hardware of the central server system **12** that controls the operation of the system of FIG. **1**. The central server system **12** may include one or more rack mounted server computers **120** each with at least one central processing unit (CPU) or other processing device and associated memory. As an example only, the rack mounted server computers **120** of FIG. **2** may be PowerEdge R420 Rack Chassis devices having a 300 GB hard drive, one or two Intel Xeon E5-2450 processors, 24 GB memories with RAID connectivity using a RAID controller card. One or more of the computers **120** may also include an input device, an output device and a driver for a display device. The computers **120** within the central server system **12** are shown as being hardwired to each other and to the internet, but the respective computers or portions of the network may include either wired and/or wireless connectivity to the internet, to an intranet or an alternative networked communication system, such as, for example and without limitation, a cloud-based system, an autonomic system, a client-server based system, a grid based system, a mainframe based system, a utility based system, a peer-to-peer based system, a cloud gaming based system, or any other suitable types of system architectures, topographies or configurations.

In addition to the respective computers **120**, the central server system as depicted in FIG. **2** includes one or more, and in this example, two network switches **122** and two firewall devices **124**. The network switches **122** may for example be Hewlett Packard model 2510-48G Switches and the firewall devices **124** may be Cisco Model ASA 5520 firewalls and associated software. As illustrated, the firewall devices **124** are interconnected to each other and to the internet, and each firewall device **124** is also connected to one of the network switches **122**.

The network switches **122** are connected to the respective computers **120**, which as shown may be divided into logical functions to control certain aspects of the operation of the wagering system which may be best understood in connection with the block diagram of the functional architecture of the program for the wagering system illustrated in FIG. **3**. In FIG. **2**, there may be provided a redundancy for the respective computers **120** such that as shown there are two computers **120** for each of the tasks, and the redundant computers **120** are interconnected.

As illustrated in FIG. **2**, there are five pairs of computers depicted interconnected through a bus, and through the bus to switches **122**. The five pairs include computers **120**A, associated with the web interface and connectivity, computers **120**B associated with the Mid-Tier program, computers **120**C for a database, computers **120**C for a Tote program and computers **120**E providing the management interface for the central server system, all as described in more detail below in connection with FIG. **3**. The computers **120**E are shown including a workstation **126** including an input device such as a keyboard and an output or display device such as a monitor. Also, the respective computers need not be located in the same facility, thus for example the computers **120**D providing the Tote functionality may be remote from the computers **120**B providing the Mid-Tier functionality.

The central server system **12** of FIGS. **1** and **2** may include software programs for wagering software functionality such as registration, deposit taking, withdrawals, account sections that may include current and previous bet histories, fixtures, results, historical data, rules and regulations. These types of software programs having these functionalities are in place in various totalizer facilities and are thus known in the art. However, FIG. **3** is provided to further illustrate the process steps of the program and operation of the central server sys-

tem **12** associated with the pool wagering system contemplated by the present disclosure. The program for the known functionality of a totalizer facility noted above would be incorporated in the Micro Tote **408** program, as discussed further below.

FIG. **3** represents an exemplary functional architecture of a program hosted or supported by the central server system **12**. The core program is represented by the center block identified as the "Mid Tier" program **402**. The Mid Tier program **402** interacts with the respective customer and website administrator input programs in the left side block identified as the Website program **404**, as well as the accounting programs in the right side block identified as the Micro Tote program **408**. The Mid Tier program **402** communicates using an "Application Program Interface" hereinafter "API," allowing bi-directional communication to, and through, the Mid Tier program **402**, as represented by the Merchant API **406** as between the Website program **404** and the Mid Tier program **402**, and the Tote API **410** as between the Micro Tote program **408** and the Mid Tier program **402**, reference lines.

The Mid Tier program **402**, as shown in FIG. **3**, may include a Merchant API **420** program, a Cash-in **422** program and an Administration **424** program. It is contemplated that the Mid Tier program **402** may be itself a dedicated stand-alone server system and program for hosting the pool based wagering system of the present disclosure, or the subroutines unique to the pool based wagering system of the present disclosure may be added to a server system and program that also hosts other types of wagering pools.

As depicted in the Merchant API **420** program box, there may be several HTTP POST request sub-routines including a Place Bet POST **430**, Ticket Enquiry POST **432**, Available offers POST **434**, Accept Offer POST **436**, Decline Offer POST **438**. The Place Bet POST **430** routine is used to place a bet on the Operator system. The Ticket Enquiry POST **432** routine is used to confirm that a ticket has been sold on the Operator system. The Available offers POST **434** routine is used to determine what bet trading offers are currently available to the customer. The Accept Offer POST **436** routine is used to accept an offer. The Decline Offer POST **438** routine is used to decline an offer.

As depicted in the Merchant API **420** program box, the system may generate several file updates including a Competition Summary FILE **440**, a Competition Detail FILE **442**, a Pool Change FILE **444**, a Fixture Change FILE **446**, a Competition Change FILE **448** and a Ticket Payouts FILE **450**. The Competition Summary FILE **440** routine holds a summary list of the available competitions It is updated when new competitions are added, old ones are deleted, or when the status or current fixture changes. The Competition Detail FILE **442** routine holds details about the competition. The Pool Change FILE **444** routine holds details on pool-level information changes on a competition. The Fixture Change FILE **446** routine holds details when fixture-level changes on a competition. The Competition Change FILE **448** routine holds details when competition-level information changes. The Ticket Payouts FILE **450** routine holds details for each pool as its status becomes official.

The Mid Tier program **402**, as shown in FIG. **3**, includes most critically the Cash-In **422** program, which itself may include the Offers Generation **452** routine, the Offers **454** routine and the Tickets **456** routine. The Cash-In **422** program is responsible for determining when an offer to buy-out a ticket holder will be made, and the price that will be offered. Within the Cash-In **422** program, the Offers Generation **452** routine is the trading engine that, when triggered, will generate a set of offers over all of the tickets that are still potential winners and then publish the offers and receive/process the acceptance of these offers via the Merchant API **420**. The Offers **454** routine stores all the offer made, accepted and declined. The Tickets **456** routine stores all the tickets for a pool and who the rightful owner is.

Further, the Mid Tier program **402**, as also shown in FIG. **3**, may include the Administration **424** program, which itself may include a Create Read Update Delete (CRUD) Merchants **460** routine, Trading Risk Management **462** routine, Stop Trading **464** routine, Reporting **466** routine, Probabilities **468** routine and Random Number Generator (RNG) Logic **470** routine. The Merchants **460** routine is to create, read, update and delete third party Merchant details within the Mid Tier. The Trading Risk Management **462** routine is to allow the control and monitoring of cash-in trading. The Stop Trading **464** routine is to allow cash-in trading to be stopped if required. The Reporting **466** routine is for calculating and reporting on settlement with Merchant systems. The Probabilities **468** routine is for the uploading of probabilities used in the trading calculations. The RNG Logic **470** routine is use for QuickPick bets.

Traditional quick picks generally allocate selections to people either randomly as prevalent in lotteries (where each number has equal probability of being drawn), or in-line with some estimated probabilities such as horse racing (or other event where outcomes do not have equal probability or prospects). It is intended that quick picks in the initial iterations of these games may or may not be in fact SMART PICKS, in that a quick pick will only be allocated to the client if it has a relatively realistic chance of providing the winning outcome and in a relative sense to the size of the pool (which may be fixed or variable (e.g., based on the public spend) or guarantee. For example, in the seven leg correct score game, some outcomes are less than 1 million-to-one, where other outcomes are greater than 1 trillion-to-one. The smart pick will not allocate a quick pick ticket to a client unless it is within a certain multiple of the pool size, say five times. As such, when the pool is £5 million, all £1 quick picks (smart picks) will only be allocated to clients wanting a quick pick (smart pick), if they are less than 25 million-to-one. The reason for this smart pick adjustment is to ensure that smart pick players are not grossly disadvantaged by being allocated a random ticket with potentially very minimal probability of success, especially in reactions to the pool size.

In an alternate embodiment, the probability of generating a particular quick picks (smart picks) ticket may be proportional to the probability of each outcome winning in addition to the smart picks caps described above. Other implementations with respect to QuickPicks/SMART PICKS that are commercially known and not described herein may also be utilized as desired.

Now referring to the left side block of FIG. **3**, the Website program **404** may be represented as including subprograms for a user interface **480** representing a dedicated website on which wagers may be entered for example by a customer using a personal computer or alternatively a wagering terminal as discussed above. Once logged into the website, the user interface **480** provides a registration and login routine **482**, an account funding routine **484**, a player protection routine **486** and a betting interface routine **488**. The user interface **480** also provides a routine to allow interconnection with a payment provider **490**, for example WORLDPAY®, providing a secure method by which payments for wagers may be submitted. The user interface **480** may also provide routines to provide a customer ledger **492**, customer statements **494** and currency exchange rate calculator **496**.

As an alternative to the customer using a dedicated website, it is contemplated that the users could interact with a Merchant Microsite **500**, representing for example an established betting house or parlor having its own customer base and methods of collecting wagers and paying disbursements from and to players. These types of Merchant Microsites **500** would be provided with their own Merchant API **406** for communicating with the server hosting the Mid Tier **402** program. The Merchant Microsites **500** include routines for single sign on **502** to the wagering pool and a payment API **504** to assist in the respective accounting functions as between the operator of the Merchant Microsite **500** and the host of the pool wagering system hosted on the central server system **12**.

As also reflected in the Website program **404**, the Administrative (Admin) Console **510** routine is provided to manage the User Interface **480**. The Admin Console **510** routine, operated by the website administrator, may include an Account Management **512** routine for managing customer account details, a Payment Reconciliation **514** routine for administration of customer deposits and withdrawals with a payment provider like WORLDPAY®, a Customer Relationship Management (CRM) **516** routine for managing sales, marketing and customer service interactions with customers and a Content Management System (CMS) **518** routine for the creation, editing and publishing on content on the Website **404**.

Now referring to the right side block of FIG. **3**, the Micro Tote **408** routine is the program equivalent to a "Totalisator" which receives, calculates and provides a display output for all bets made in a given progressive pool bet system. The Micro Tote **408** routine may thus include a Gateway **520** program, a Memory Grid **522** program, a Central Repository **524** program and an Administration **526** program. The Gateway **520** program includes a routine posting the wagering card **530**, summing all of the wagering **532**, providing updates **534**, and calculating each potential payout **536**. The Gateway **520** program also includes a routine for pooling and accumulating all of the Gateway Tickets **538**, which is the master routine for each bet that has been placed and accepted in the pool.

Also within the Micro Tote **408** is a Memory Grid **522** program that includes a Pool Collations **540** routine. The Pool Collations **540** routine calculates and continuously recalculates the odds as each bet is placed and accepted, and as each event result occurs within the pool, so as to determine the odds with respect to each remaining active ticket within the pool bet. The odds and all information calculated by the Pool Collations **540** routine is routed through the Tote API **410** to the Mid-Tier **402**, and specifically to the Merchant API **420**, Cash-in **422** and Administration **424** routines.

Also within the Micro Tote **408** is a Central Repository **524** program that includes a Ticket History **542** routine. The Ticket History **542** routine retains a complete record of each bet placed, each respective ticket, all payouts, and all unpaid credits for all of the respective pools. The information within the Ticket History **542** routine may be maintained primarily for the benefit of regulators and/or oversight organizations and taxing agencies.

Finally, the Micro Tote **408** may also include an Administration **526** program that includes routines for Message Queue **544** which is for inter-process communications within the Micro Tote, Create Read Update Delete (CRUD) Wager Card **546** is for setting up the event information that will be wagered on, Manual Events **548** is for manually managing updates to events, CRUD Merchants **550** is for create, read, update and delete third party Merchant information on the Micro Tote, reports **552** is for settlement reports for the Micro Tote and Data Feeds **554** is for third party event feeds.

With respect to the software programs of FIG. **3**, and with respect to the respective computers of FIG. **2**, computers **120**A drive the consumer websites **480**, merchant microsites **500** and the website administration console **510**, computers **120**B host the main Mid-Tier program for driving the merchant API **420**, cash-in **422** and mid-tier administration console **424**, computers **120**C host the program for physically maintaining the Customer Ledger database **492**, computers **120**D host the program for physically maintaining the Tote **408** that consists of Gateway **520**, Memory Grid **522**, Central Repository **524** and Tote administration console **526**, and computers **120**E host the program providing the physical management interface for the entire interrelated system software.

For the wagering and option buy-out system of the present disclosure, the central server system **12** is programmed to provide to the wager stations **14**, wager terminals **16** or personal devices **18**, **20**, **22** or **24** various options for placing wagers on one or more (e.g. a sequence of and/or separate discrete) sporting events spread over an appropriate interval. The wager stations **14**, wager terminals **16** or personal computing systems **18** would allow a player to place a wager on a series of (or separate discrete) sporting events, for example three to eight soccer matches scheduled to occur over a three day period. The player would select the winners, or in some embodiments the particular scores of the matches (or any other variables), for each particular sporting event within a defined cumulated pool or other. The player would receive either a printed ticket or an electronic ticket representing the selections and the amount of the bet. The controller or server system **12** would maintain the pool, assign tracking identifiers to each wager and ticket placed into the pool, and determine any payout requirements from the pooled wagers in the event of a successful selection of all of the events.

The wager stations **14** and wager terminals **16** may include one or more display devices controlled by the processor. The display devices may be connected to or mounted to the cabinet of the wager terminal. The embodiments as generally illustrated in FIG. **1** may include, as known in the art, a display device which displays the betting options. This display device may also display any suitable secondary information associated with the pool wagering system. The wager stations **14** and wager terminals **16** may include a credit display which displays a player's current number of credits, cash, account balance or the equivalent. In one embodiment, wager terminal includes a bet display which displays a player's amount wagered. The wager stations **14** and wager terminals **16** may include, without limitation, a monitor, a television display, a plasma display, a liquid crystal display (LCD) a display based on light emitting diodes (LED), a display based on a plurality of organic light-emitting diodes (OLEDs), a display based on polymer light-emitting diodes (PLEDs), a display based on a plurality of surface-conduction electron-emitters (SEDs), a display including a projected and/or reflected image or any other suitable electronic device or display mechanism. In one embodiment, as described in more detail below, the display device includes a touch-screen with an associated touch-screen controller. The display devices may be of any suitable size and configuration, such as a square, a rectangle or an elongated rectangle. The wager stations **14** and wager terminals **16** may be any sort of integrated products or stand alone terminals or devices, such as, for instance and without limitation, one for a casino or betting shop, such as in the nature of a fixed odds betting terminal ("FOBT") or a Best Gaming Technology ("BGT") Self ser-

vice terminal, as examples. Any other suitable types of products or devices commercially known may also be utilized where desired and in accordance with the needs of a particular implementation.

The wager stations **14** and wager terminals **16** also may include at least one payment acceptor in communication with the processor. The payment acceptor may include a coin slot and/or a payment, note or bill acceptor, as examples, where the player inserts money, coins or tokens. The player can place coins in the coin slot or paper money (e.g., the coins or paper money may include actual and/or virtual currency), a ticket or voucher into the payment, note or bill acceptor. In other alternatives, devices such as readers or validators for credit cards, debit cards, credit slips or the like may accept payment. A player may insert an identification card into a card reader of the wager stations **14** and wager terminals **16**. The identification card may be a smart card having a programmed microchip or a magnetic strip coded with a player's identification, credit totals (or related data) and other relevant information. A player may carry a portable device, such as a cell phone, a radio frequency identification tag or any other suitable wireless device, which communicates a player's identification, credit totals (or related data) and other relevant information to the wager stations **14** and wager terminals **16**. Money may be transferred to a wager station **14** or wager terminal **16** through electronic funds transfer. When a player funds the wager station **14** or wager terminal **16**, the processor determines the amount of funds entered and displays the corresponding amount on the credit display or other suitable display. As should be understood, where the term "money" or reference to some form of funds is made herein, both actual currencies and virtual currencies would equally be captured by this term.

In one embodiment, the wager stations **14** and wager terminals **16** may further be configured to: read the receipt of a purchased ticket, make a buy back offer on the ticket, accept that buy back offer, print a ticket for the cashed-in value, print another ticket, and/or adapt the first ticket so the client has a record his ticket is now partially owned by him.

The wager stations **14** and wager terminals **16** may include at least one and preferably a plurality of input devices in communication with the processor. The input devices can include any suitable device which enables the player to produce an input signal which is received by the processor. After appropriate funding of the wager station **14** or wager terminal **16** the input device is a game selection device or a game play button which is used by the player to identify the selected outcome of each of the games/matches/legs of the pool wager on the wager station **14** or wager terminal **16**.

As this first embodiment of a pool bet system is premised on betting of sporting events, the server has an input device **26** allowing an operator to enter the results of the sporting events, the winners of the matches or games, the final scores and/or other parameters such as the total score of the game or the point differential. It is contemplated that this information will be entered reasonably promptly following the completion, and if required certification, of the sporting event. With the results of the sporting events for a first sequence of events, the system will make a determination as to whether any individual wagers recorded in the system have correctly selected the winners (or point spread etc.) of the sporting events.

After some percentage, such as a majority, of the sporting events have occurred, the server system **12** may be configured to identify the remaining potential winning ticket or tickets for the Jackpot Pool, i.e., those tickets that have correctly selected each of the results (win or consolation) of the events of the completed legs, or remain eligible for the consolation prize for selecting a certain percentage of the actual winners (i.e., 6 of the 8 winners). Upon determining the number of remaining potential winners of the Jackpot Pool, the system will determine the likelihood of each ticket winning the Jackpot Pool (alone or shared with other players, which may be known or modeled), and on that basis make a determination as to the attributed value of the ticket based on its respective probability of winning the Jackpot Pool (and the prize if split multiple ways). The server system **12** then makes the determination of what the appropriate value would be for a ticket in order to make an offer to buy-out to one or more players (as disclosed herein, in other examples one or more other sources may also be used in addition to, or as an alternative to, the server system **12** for determining the appropriate value). In one example, the buy-out offer is for buying an entire ticket from a player (i.e., 100%) for an indicated value. As should be understood, the buy-out offer may be for any desired percentage of a ticket (i.e., any percentage between 0%-100%). The player presented with the buy-out offer may decide if it will sell the ticket at the indicated value, not sell at all and retain 100% of the ticket and/or make a counter offer (i.e., such as a different percentage amount and/or a different value, etc.), as examples. If the buy-out offer is accepted, the player will receive the indicated value (which may occur in a variety of different ways as described herein). In certain examples, when a buy-out offer is accepted, the entity that initiated the buy-out offer will in return obtain legal ownership of the ticket from the player. In certain other examples, the entity that initiated the buy-out offer will not obtain legal ownership of the ticket, but merely obtain an entitlement (e.g., a contract) to obtain all or any portion of any future Jackpots, awards or other prizes, etc. (i.e., depending on the ticket percentage related to the buy-out offer) that may occur in connection with the ticket from the point of purchase moving forward. In certain other examples, the player may also have the option to offer (i.e., counter offer) or sell something different than the original buy-out offer, such as just a portion of a ticket in response to a buy-out offer. As an example, and without limitation, depending on how a desired system is set up, the player may have the option to provide a counter offer for consideration by the entity that initiated the buy-out offer (e.g., something different than the original buy-out offer, such as a different percentage of a ticket and/or a different designated amount for the value, etc.), and with the entity being able to accept the counter offer (or alternatively where set up in this manner, to otherwise deny or provide yet another counter offer back to the player, etc.). Similarly, where desired, rather than the entity providing the acceptance, the entity may merely provide an indication to the player that is agreeable to the terms and/or provide to the player a new buy-out offer along the lines of the counter offer, which may then be accepted by the player. However, it should be understood that this is merely a matter of logistics for how acceptance is to be made to a counter offer (either by the entity or player), but both approaches will accomplish the same objectives and may be utilized where desired. In addition to, or alternatively, depending on how a system is structured, the player may have the ability to sell something different directly in response to a buy-out offer, such as a different percentage of a ticket. As an example, and without limitation, in response to a buy-out offer for 100% of a ticket, a player may sell only 50% rather than 100% of a ticket, and the amount paid to the player would then be similarly reduced, such as being reduced proportionately by 50%, or alternatively reduced less than 50% if a premium was associated with the 100% buy-out offer, or any other desired amount depending on how a system is desired to be structured. As

should be understood, and without limitation, a player may offer or sell in response to a buy-out offer any different percentage of the ticket in return for a percentage of the indicated value. The percentage of the indicated value may also vary as may be desired based on the percentage of the ticket offered or sold. For example, in certain situations, partial cash-in of a ticket may be proportionate to the ticket's full value, while in other situations partial cash-in of the ticket may not be proportionate with the ticket's full value, as the operator may want to incentivize certain behaviors around cash-in, according to particular preferences of the operator. In one example, sale of 50% of a ticket may correspond to 50% of the indicated value of a ticket. In another example, a certain defined "premium" may also be allocated against the player for a sale of less than 100% ownership of a ticket; for instance, sale of 50% of a ticket may correspond to payment of only 45% of the indicated value (with the premium corresponding to 5%), although as should be understood, the amount of the premium can vary and/or may also be adjusted based on the amount of the ticket sold, as may be desired (i.e., a lower premium the greater the amount of the ticket sold and the higher the premium the lower the percentage of the ticket sold). The premium may also vary, on the value sold or the proximity to the end of the game, as examples, and it would be expected that large sums and closer to the end of the game tickets would attract the biggest premium, as users should be less price sensitive.

In yet another example, where a player sells 100% of a ticket, they would receive in return the indicated value together with a "bonus" for selling 100% ownership of the ticket, and that bonus may be set at any desired value, such as a certain percentage of the indicated value of the ticket. In yet other examples, the buy-out offer may be for buying all or a portion of a ticket from a player. In another example, a player may receive a bonus for a partial-cash in, should there be a desire to incentivize a player to sell less than 100% of a ticket. Other variations are also possible according to the preferences at issue. In various examples, the buy-out offer may be initiated from any type of entity. For example, the entity could correspond to one or more parties of any type. This may include, for example, a private party or parties working in collaboration and/or a government or quasi-governmental party, etc. For instance, and without limitation, the party or parties may be the operator(s) of the network or just user(s) of the network.

By way of example, upon presentation of the ticket to one of the wager stations **14** or wager terminals **16**, the ticket will be verified and the system will present the offer to purchase the whole ticket will be displayed on the display devices, and the player will have the option to accept or reject the offer via an input to the wager station **14** or wager terminal **16**. The player can also respond, or alternatively be presented with the option, to sell any fraction of a ticket he/she wishes to sell through the wager station **14** or wager terminal **16**. The player may also be able to respond, or offered the option of selling different fractions of the ticket at different stages or after respective legs of the pool event. For example the player may sell 10% after fourth leg, another 20% after the fifth leg and 30% after the sixth leg, thereby still retaining 40% of the original ticket to the conclusion of the game after the seventh leg.

As another example, if after 5 matches (or legs) of a 6 match pool there are 3 remaining tickets that have correctly identified the outcomes of the first five matches (or legs), and all having an equal chance of winning the $1 million Jackpot Pool, then the server system **12** may calculate that each ticket has an actual value of $100,000. This would be the case if each person held an outcome in isolation of the other two tickets, and then the probability of each of the three owned outcomes was 10% or a price of 10.0 in decimal terms. Upon application of a risk factor and/or margin discount, the server system **12** would establish an attributed value and then communicate an offer to purchase the respective tickets to each of the ticket holders, at a price of for example $80,000 for each ticket, representing a 20% margin for the purchaser. The offered amount would represent a substantial return on a $2 ticket, and removing significant volatility for the player, that was one step from winning $1,000,000 but also one step from winning nothing. The offer may be for 100% of the ticket, or alternatively could be for a partial portion of the ticket, for example an equal fifty percent share, at $40,000. In this option, it is contemplated that various percentage offers could be made, for example any 10% interval from 10% to 90%, at an appropriate monetary amount. Thus, the player in the above example could sell 10% of the ticket for $8,000 and retain the potential of receiving 90% of the $1,000,000 Jackpot Pool.

It is also contemplated that the server system **12** will have the ability to receive additional data via the input device **26**, for example various odds on respective wagers concerning the sporting match or event, that may impact the attributed value calculated for any given ticket. That additional information could be used to calculate with greater precision the potential odds, and attributed value, of the remaining tickets after each round or leg of the pool. Thus, in the example above, if one of the remaining 3 potentially winning tickets has predicted the final score of the final soccer match as 2-1, while another has selected the final score as being 1-10, then the more likely score of 2-1 will have a higher attributed value than the ticket having selected 1-10. In that event, the ticket holder of the 2-1 score match may be offered more, as that ticket's attributed value (or expected value in mathematical probability terms) will be higher.

To further explain the example, the outcome probability factor (OPF) and the Expected Value (EV) of two respective tickets with the following score predictions may be set as:

2-1 price (OPF?)=10.0, and

1-10 price (OPF?)=1000 (as it is an unrealistic score but useful for this example), with

EV=1,000,000 (POOL)/Price of outcome/number of tickets holding that outcome.

Therefore, the ticket with the score of the final leg being 2-1 will have an estimated value in a $1,000,000 pool calculated as 1000000/10/1=$100,000 while the ticket with the score of the final leg being 1-10 will have an estimated value in a $1,000,000 pool calculated as 1000000/1000/1=$1000. Therefore the person having the ticket predicting the 2-1 outcome will be offered in the region of 100 times more for his ticket as his ticket is 100 times more likely (than the ticket with the 1-10 score) to win the $1,000,000 jackpot.

This mathematical calculation of EV for fair value can be extended to the entire range of tickets that exist and extended backwards to the tickets remaining after the very first leg if appropriate. The ticket holders could be offered "cash in" values at any time, such as from as soon as is acceptable and viable. In certain examples, it is envisaged that cash in circumstances will increase later in the game when the potential values begin to rise significantly. In addition, in certain examples, games may include a Consolation Pool and/or a Bonus Pool in addition to a jackpot. Also, in certain examples, the ticket cash-in or buy back may include the purchase of the rights to other pools. As merely an example and without limitation, in games where there is a Consolation Pool and/or a Bonus Pool in addition to the jackpot, the ticket cash-in or

buy back may include the purchase of the rights to the other pools, and the price offered will include the EV/FV/theoretical value of the bonus ticket (and any potential dividends from the Consolation Pool) given the live tickets remaining. As should be understood, in other examples, the ticket cash-in or buy back may still include the purchase of the rights to other pools even where no Consolation Pool and/or a Bonus Pool is provided.

As another option in the system, the buy-back or cash-in offer may be staged as an iterative bidding process. Thus, even after a first offer is made and rejected, the operator may elect to make another higher offer upon a subsequent presentation of a ticket. However, the holder of the ticket will not necessarily be given a second offer once the first offer is rejected so that the ticket holder will be unaware of whether a greater offer will follow or if they will be locked into the "hold" position until the conclusion of the next match or leg of the game.

An output device such as televisions **24** may also be coupled with the central server system **12** computers **120** and configured, for example, to display the pool of betting combinations and a representation of the tickets or wagers that are active in the system resulting from the bettor-selected game predictions and the results of the respective games or events that have been completed which form part or all of the pool events. Such an output device **24** may also include, for example, a visual display and/or a printing device. Additionally, such an output device **24** may be configured to display the results of an event taking place at a remote venue, such as the event forming the next leg of the pool. Thus, a betting parlor may have a series of televisions and monitors broadcasting the event (i.e., a soccer match), while also displaying streaming data concerning for example the number of tickets that remain in the pool, alerts when a goal is scored that eliminates tickets from the pool, and potentially the offers to buy outstanding tickets.

The wagering stations **14**A and wager terminals **16**A may be located at a first venue, while other wagering stations **14**B-**14**N and wager terminals **16**B-**16**N may be located at other remotely located venues. Thus, the network formed of the plurality of wagering stations **14**A-**14**N and wager terminals **16**A-**16**N may enable wagering on, and monitoring of, events at multiple venues substantially simultaneously if so desired. Accordingly, it is contemplated that the operator could have wagering stations **14**A-**14**N and/or wager terminals **16**A-**16**N in multiple locations within a city, or multiple locations within a state, country or region, so as to allow pooling of bets in the game across a significant population to drive the amounts of the Jackpot Pool to substantial values for each individual game, series of events/matches.

In another embodiment, the wagering stations **14**A-**14**N may be located in a single venue such as a race track where, for example, a first wagering station **14**A acts as a server for all of the other wagering stations **14**B-**14**N networked to it for conducting the pool wagering activity, with wagering stations **14**B-**14**N acting as terminals coupled with the server of first wagering station **14**A.

It may be appreciated that the wagering activity and buy-out option according to the present disclosure may be effected in a specific environment at a specific location on a stand-alone (or closed) system or may be electronically linked to include play in a plurality of environments or at a plurality of locations. For example, the wagering stations **14**A-**14**N and wager terminals **16**A-**16**N may be distributed throughout a variety of wagering venues including race tracks, off-track betting facilities, retail establishments (where legal), casinos, lotteries, and on the Internet. Further, such wagering activity and evaluation thereof may provide automatic and immediate performance feedback (individual and team performance, leader boards or other indicia of participant standings, contest time remaining, account balances, etc.) to participants via text messaging, cellular telephones, PDAs, interactive television, email, Internet browsers or other applications. Here again, the wide distribution of available outlets and devices for entering into the game is intended to allow pooling of bets in the game across a significant population to drive the amounts of the Jackpot Pool to substantial values for each individual game, series of events/matches.

In a sports or event based wagering environment, the product concept can be applied to a number of different sports and markets. For convenience, the first implementation of the product will be described with respect to a series of soccer correct score and "Home/Draw/Away ("H/D/A") markets pooled and bet on a weekly basis. The system operator will select multiple game (three, four, five, six or seven or more games) that will occur over the following days or a weekend. For example, the system operator may select three games on a Saturday, two games on a Sunday and the final one or two games on a Monday. Players will be challenged to select the correct score for each of the games. To win the Jackpot Pool, the player must select the correct score of each of the six or seven games. The cash in function described herein may be applied even on low leg games such as a pick 3.

Accordingly, the system operator may offer several different multi-leg outcomes. For an exemplary description, a version of the pool wagering system will be described using a six leg correct score game run over six soccer matches. However, it should be readily apparent that the pool wagering system may be adapted to a PICK-n correct score model. In this example, it is assumed that the most likely result in any soccer match will have a high score of three for either team, as shown in FIG. **4** which shows the total goal expectancy over six years for six premier leagues and the world cup. In the six leg pool wagering system, each leg may consist of seventeen outcomes, these being 1-0, 2-0, 2-1, 3-0, 3-2, 3-2 and "AOH" (any other home win) then 0-0, 1-1, and "AOD" (any other draw) and the reciprocal away results, to allow each leg to consist of 17 outcomes. The inclusion of terminal group scores "AOH, AOD, AOA ensure better user experience and manageable number of probable selections. Such group could easily be extended to point spreads in games like basketball or any others, where the selections might be minus 25 points (−25), minus 24 points (−24), minus 20 points (−20) . . . plus 20 points. (+20), plus 24 points (+24), plus 25 points (+25), etc.

It should be understood that the foregoing is exemplary and the potential outcomes can be varied and may not be consistent over various leagues where the number of goals scored may be higher on average. The alternative anticipated scores for such a league may only influence the distribution, but not the applicability of the game, which will have a set of probabilities for each respective outcome that may be league dependent.

It is contemplated that the operator may provide that the minimum amount of the "Jackpot Pool" is guaranteed at a set level, and most of the other bets offered could be guaranteed to insure first day retail popularity. Those players who correctly select scores and winners of each leg will share the maximum of either the guarantee, or the stakes of all the others (less any applicable deductions) and also gain entry into a bonus pool. The Bonus Pool may be won or shared by any individuals that successfully choose one or more correct score(s) the following week, or a nominated time or similar

A Consolation Pool may be shared by those who select all the correct outcomes (H/D/A) or another subset of the correct score game, or on other variations based on, for example, any five of six or six of seven. The player in this example will not need to nominate H/D/A but his correct score prediction 'Home 2-0' will naturally be allocated to a "Home" outcome in the H/D/A determination of the Consolation Pool. As such on a correct score pick 7, 7 correct H/D/A results in-line with a player's CS selections will mean the player "wins" the consolation prize. In racing terms, the consolation will frequently be based on the horse, dog, race car driver, etc. placing as opposed to winning.

As each match is played—and each goal is scored—player bets represented by their respective tickets will gradually be eliminated from the remaining tickets that can still win the Jackpot Pool. Those that remain will be able to anticipate that the value of their tickets increases as they see the results of each game. The central server system **12** may be configured to allow the display of the tickets that remain active for the Jackpot Pool on each of the wagering terminals or alternatively a display board at distributed wagering locations as commonly provided in present establishments for example to display soccer matches, racing events and available wagering events and odds. While the flagship of the pool play will be the Jackpot Pool for correctly selecting the six or seven correct scores, other games such a pick three could also be offered to be completed within a single day or short time period.

Between legs, and preferably after several of the games or matches have been completed, but potentially also during the course of an event for example at the half-time of a match or event, players with "live" tickets may be offered the option of selling all or a portion of their tickets back to the system operator (or alternatively, directly or indirectly through the system operator, or directly to, any designated third party, such as, without limitation, one or more third party operator (s), business entity or entities such as a merchant(s), one or more other persons, etc.) or to retain their tickets and see whether their correct score predictions will unfold for the remaining games. As should be understood, any reference to system operator herein should be construed to apply equally to any third party as an alternative, even if not specifically mentioned. The buy-out option will preferably be communicated through the wagering station **14**, wagering terminal **16**, or internet connected computing devices **18-24** from which the respective wager was placed and ticket purchased. However, as the wagering stations **14** wagering terminals **16** may not be accessible to the player, it is further contemplated that at the point in time that the player places a wager in the pool play of the present disclosure they will provide contact information to allow communication with their computing system **18** that is linked on the central server system **12** to the particular ticket. Thus, the central server system **12** will be able to send a message to the ticket holder's computing system **18**, smart phone **20**, or tablet computer **22**, providing details of the buy-out offer. If the ticket holder decides to cash in the ticket in response to the offer, the ticket holder may communicate the acceptance via the computing system **18**, smart phone **20**, or tablet computer **22**, to the central server system **12**. Alternatively, the ticket holder would present the ticket to one of the wagering stations **14** or wagering terminals **16** which in turn communicate the acceptance to the central server system **12**, and upon verification, provide the ticket bearer with a payout in the form of cash, a voucher or check. If necessary or appropriate in the respective jurisdiction, the amount of the payout may be reduced in an amount required to be withheld for tax purposes.

It is anticipated that for the pool wagering system with the buy-back option of the present disclosure that there will be an initial guarantee by the operator of the Jackpot Pool in an amount sufficient to create initial interest, for example $1 million. Thereby, Jackpot Pool winners will always be guaranteed to win all or a share of a Jackpot Pool equal or in excess of $1 million. In a first embodiment of the system and product, with respect to each ticket purchased the split following the takeout (e.g., set at 25%) may be as follows: 75% to fund the Jackpot Pool, 15% to fund the Bonus Pool, and 10% to fund the Consolation Pool(s). Other splits may be desirable and are expressly contemplated. Therefore if $250,000 (i.e. 125,000×$2 per ticket) was bet into the pool in the first week, the Jackpot Pool would stand at $140,625 (i.e. $250,000×0.75×0.75=$140,625), but any winners would share in the $1 million guaranteed Jackpot Pool. Any winners of the Consolation Pool (i.e. those selecting five out of six of the correct scores accurately) will split a share of $25,000 between them less deductions (i.e. $25,000×0.75). The following week, winners would get the opportunity to select a correct score (for each successful ticket) from a featured match to be in with a chance of winning the Bonus Pool. Anyone who correctly predicts that correct score would therefore net a share of the Bonus Pool.

Should the Jackpot Pool and Bonus Pool not be won for a few weeks, then those pools may build up to very significant amounts. For example, if players bet a total of $3,000,000 into the Jackpot Pool (over a period) but fail to win the main Jackpot Pool prize, then a total win/jackpot payout of $2,250,000 will have built up and any winners the following week Jackpot Pool winners will get a share of that amount plus a share of the amounts staked in that week. Therefore, if another $3,000,000 is bet into the Jackpot Pool then the potential winnings will stand at $4,500,000. Should three people win the game, then they will split $4,500,000, giving them $1,500,000 winnings each (less their price of purchase and/or deductions other than the takeout, if applicable). The Consolation Pool will have been won previously—in all likelihood—and will for example stand at about $300,000 from the current week's stakes. If 30 players select five out of six correct scores that week, then they will win $7,500 each. The Bonus Pool will not have been won (yet) and will stand at $900,000. The three winners will have the chance to win the Bonus Pool in the next week, each getting one selection.

As the matches or games for each of the respective tickets are preferably staggered over 2, 3 or even 4 days (typically 3 days Saturday to Monday), the system operator will have the ability to communicate to the respective wagering outlets or through an online interface to offer players the ability to sell back any tickets which are still 'live' after one but preferably several of the matches as discussed above. In other circumstances, such as in tennis as an example, buy-back of tickets may be enacted intra leg (between sets or games), or in later legs. In football, for example, buy back may occur during live play.

To further illustrate, if a player has a ticket where the first three matches/games on a Saturday were predicted correctly, he/she will have the facility to sell back to the system operator the same ticket and close out their position before Sunday's matches. The buyback value will be calculated by the server, potentially under the control of the system operator or the business partner, based on the number of match legs the ticket has already correctly predicted plus the remaining predictions for the subsequent games. When a ticket is cashed in (i.e. bought back by the system operator), the ticket and all the rights of the ticket will vest in the system operator. In addi-

tion, this buy-out facility will include a margin for the system operator, anticipated to be around 15%.

For example, if, going into the Monday night games, a player has two tickets which are still in play, and their predictions for the final two matches are 2-3 and 1-0 on one ticket and 2-2 and 1-0 on the other ticket, they will have the option to cash in either or both of their tickets. The server system under the direction and control of the system operator will calculate the estimated odds of winning the pool (and payout) with either ticket and will offer a buyback value to the player. The mechanism will be clearly explained to players who can opt to either exercise the opportunity to sell back their position or stay in the game until the end. While as noted above the central server system **12** may have the ability to provide information on the number of tickets that are still in play after each leg or match in the pool, it is also contemplated that the information may or may not be communicated to the respective ticket holders who receive the buy-out offer. Thus, the ticket holder may not be aware that there are only a few as opposed to dozens of still viable tickets in a given pool when the buy-out offer is communicated. If the player is given some information for transparency, it may or may not be leg by leg information, and as such he might know how many tickets remain but he cannot know if he owns the exact permutations he owns unless the game is in the final leg. It may however be beneficial to communicate with the holders of every remaining live ticket the exact number of outstanding live tickets, and the scores those tickets have allocated in each leg. The only time the disclosures may not be communicated will be during concurrent games. The information, if given leg by leg, gives 100% clarity on the potential to split the jackpot once published for the final leg. Individual permutations and their ownership level may or may not be given, but they potentially could be.

It is also envisioned that cash-in buy back may also operate during live play and offer continuous cash-in ability as soon as it is technically possible, for example at the half-time of a match or during the running of a match when possible. It is also contemplated that a ticket could be purchased with two or more potential outcomes selected for the final legs or events, for example by paying twice as much the player could have one selection in each of the first five legs and then have two different selections for the sixth leg. In such an event, the system may offer to buy both outcomes, or each outcome and thereby divide the ticket as between the original player and the system operator. This type of fragmentation of the tickets could be extended to any leg of the event.

The ticket buy back process may include an interactive process that bids the ticket holder in a sequence of events for the ticket. For example, the system operator might originally offer the client $100,000 for a ticket that has 5 correct scores, if the client declines to sell the ticket, the system operator might revert to offer $105,000. At each step the ticket holder may not be aware if that is the final buy-out offer or a better buy-out offer will occur. In certain examples, there may also be only a limited number of buy-out offers made and/or capable of being accepted with respect to a particular game or games, (i.e., made to/accepted by players participating in a particular game), so the greater the number of buy-out offers declined by a player and/or longer the time period before a player accepts an outstanding buy-out offer, the greater the risk may be that no additional buy-out offers will be made to that player or an outstanding buy-out offer made to a given player may be withdrawn (i.e., once the maximum limit is reached). Furthermore, the ticket holder may have the period between the offer and the start of the next leg of the bet in which to make up their minds. Once the next leg has started, buy-out offers may be automatically withdrawn. It is further contemplated that the ability to trade or sell tickets back to the system operator may be continuous, and also in these circumstances, the bid may be extremely time sensitive. Additionally, as discussed above, the player or ticket holder may have the option to sell a fraction of their ticket to the system operator or other third party. In the first instance, this facility may be limited where desired, such as to 10% fractions. A player that sells a portion of his ticket back to the system operator may then only get paid in respect of the remaining fraction of the bet should the ticket be successful. The system operator may pay the other portion to itself (or the third party ticket purchaser) if that ticket was successful.

If a player retains a portion of a ticket that is successful and thus entitles him to play a bonus game, in certain examples, the player will be allowed one selection (or other desired selection amount(s)), but will only win the fraction of the Bonus Pool that he holds in the winning ticket. In other examples, a player may be allowed to decouple a ticket, such that a player may accept a full or partial buy-out of only certain parts of a ticket (i.e., for a given Jackpot, or only certain events listed on a ticket, such as particular games) and with the remaining parts of the ticket being unaffected, so that the player retains the entirely of these remaining parts of the ticket (i.e., such as a bonus and/or consolation pool, or any other events listed on a ticket, such as remaining games). As mentioned above, when a ticket is cashed in (i.e. bought back by the system operator), the ticket and all the rights of the ticket will vest in the system operator. As such, the system operator would hold the other portion of the ticket and be entitled to select an outcome in the bonus leg and win the portion (or whole) bonus. It is contemplated that where the system operator holds a whole or part of a bonus ticket, they will need to nominate their selection earlier than the remaining players, for example, the system operator must nominate their selection 2 hours prior the start of the bonus game, and members of the public will only need to offer their selection 1 hour before. This rule would help ensure that the system operator's selection cannot be made with the prior knowledge of the public selection. As a default, any player having a valid qualifying ticket that does not make a selection in the Bonus Pool for their bonus ticket will be allocated a selection having a high probability, for example a 1-1 draw. This may be provided in the terms and conditions ("T&Cs") of the game.

In the context of a lottery game, in certain implementations any player having a valid qualifying ticket that is not present or found in time for the cash-in phase will be deemed not to sell. In the context of slot games, in certain implementations if a timer expires, the player will have been deemed not to have sold. Thus, generally speaking, if a player does not give input or is not present to make a decision as to what he/she wants to do, the game will proceed as if player does not want to sell.

In a first implementation it is anticipated that only the system operator will be able to offer the buy-out option to the active tickets holders using the central server system **12** to communicate the offers. However, it is also contemplated that the system operator may use the central server system **12** to solicit offers from third parties that would be communicated to the active ticket holder. In this embodiment, the central server system **12** could communicate the details of the outstanding active tickets through all or a select number of wagering terminals **16** and allow bids for the outstanding active tickets to be submitted via the wagering terminals **16**. As another alternative embodiment, it is contemplated that the system operator could facilitate the ability of members of the public to buy and sell active tickets like in the manner of

a person to person betting exchange, such as, without limitation, of the type offered by Betfair. Thus, it is also contemplated that the central server system **12** could allow the posting of available buy-back options so that the public could place buy-back offers for example though the wagering terminals **14** and the ticket holder could select the buy-back bid of his or her choosing.

With the foregoing description of the implementation, it may be appreciated that during the course of an exemplary wagering event (e.g., such as a pool, a parlay, an accumulator, etc.), the central server system **12** may go through certain of the following process steps, and in one or more rounds as may be required to complete a particular wagering event, as shown in FIG. **5**, comprising:

a) receiving information on the results of the events/matches from the input device;
b) interrogating the ticket base, to count live or active tickets that have correctly predicted each game outcome to date following each outcome;
c) price the active tickets based on the number of active tickets that will hold a particular outcome;
d) price the active ticket on the probability of the selected outcome;
e) price the active ticket as against the scope of the Jackpot Pool;
f) determine an attributed price ((pool size/number of ticket that hold that outcome)*probability of that outcome-margin) and offer price for the active ticket(s);
g) communicate the offer price to the active ticket holder for all or a portion of the active ticket;
h) receive confirmation of acceptance of the offer from the active ticket holder;
i) complete the buy-out transaction;
j) receive input on the completion of the final events/legs of the pool;
k) distribute the Jackpot Pool to holders of the winning active ticket(s).

Further, the concept and system disclosed herein can be adapted for other multi-outcome wagering scenarios and may include any desired manner of wagering, including but not limited to those that accommodate accumulator or parlay wagering, as an illustration. For purposes of this disclosure, a parlay or accumulator wager comprises a single wager that links together two or more discrete events and in any combination (e.g., legs or divisible portion thereof) and is dependent on correctly selecting the outcome of the two or more discrete events. For instance, a parlay or accumulator wager as referenced herein may include a double, treble or any other type of multiple wager as may be known in the art. As one example, an accumulator or parlay may have much higher payoffs than wagers placed on individual discrete events since the difficulty of hitting it (i.e., correctly selecting all event outcomes) is much higher. If any of the discrete events in the accumulator or parlay lose (i.e., the selected outcome is incorrect) the entire accumulator or parlay loses. In certain other examples, where the parlay or accumulator wager includes combinations of discrete events, and one or more of those combinations lose, the player may be still eligible to win some portion of a jackpot, a consolation, or some other award as may be desired. Thus, in the context of the present disclosure, an accumulator or parlay wager may be placed on a multi-leg event (either in the entirety or a designated portion or portions of legs, etc.), such that the outcome of each leg corresponding to the accumulator/parlay wager must be correctly selected for the accumulator/parlay wager to be eligible for a designated prize or award (e.g., a jackpot) or portion thereof. In certain examples, the parlay or accumulator wager may be selectable by at least one of a player, a third party, the wagering system or some other manner as may be desired. Notably, for example and without limitation, the terms wagers, wagering, bets and betting as referenced herein may include, without limitation and for illustration purposes only, single wagers, multiple wagers, full cover wagers, full cover wagers with singles, 'Any to Come' (ATC) or 'if cash' wagers, specialty wagers, forecasts, fixed, variable, guaranteed, parimutuel wagering, fixed-odds wagering, and any other variations known in the art, etc., alone and in any desired combinations. For example, multiple wagers may include a parlay or accumulator wager.

As another example, a multi-outcome wagering scenario may include slot machines. In this alternative, the system could be incorporated into any type of slot machine game, such as a progressive jackpot played for example on a slot machine **26** as depicted in FIG. **1**. In this example, each reel or defined number of reels of the slot machine **26** may correspond to a different leg of a multi-outcome wagering event. As noted above, each reel may be a virtual reel (as in a video or electronic slot machine, for example) or a mechanical reel as in conventional slot machines. Further, any of the type of wager input devices described above in connection with FIG. **1** may be used, or alternatively a conventional slot machine may operate as the wager input device. In addition, there may be a plurality of slot machines **26** provided for participation by multiple participants, and each of the slot machines being in communication with a server system controller. Currently, slot machine based games have an outcome which is determined almost immediately even though the machine may take a few seconds to display the results. Even in the present systems, the game is complete before a person has the chance to realize that they are getting closer and closer to the premier prize. In most examples the reels stop one by one, with only 1 second or so between each reel. However, the display of each reel stopping is primarily for effect as the outcome of the game is determined by the random number generator in the game controller shortly after the play is initiated.

The present disclosure may be implemented in various configurations for gaming machines or wager terminals known in the art, including but not limited to a dedicated gaming machine or wager terminal, wherein the computerized instructions for controlling any games (which are provided by the gaming machine or wager terminal) are provided with the gaming machine or wager terminal prior to delivery to a gaming establishment, and a changeable gaming machine or wager terminal, where the computerized instructions for controlling any games (which are provided by the gaming machine or wager terminal) are downloadable to the gaming machine or wager terminal through a data network when the gaming machine or wager terminal is in a gaming establishment. These types of gaming machines and their respective operation in both stand alone and pool or progressive games are disclosed in detail in U.S. Pat. No. 8,105,149, incorporated herein by reference.

By incorporating the concept of the present disclosure, the slot machine could be programmed such that once a first level of jackpot indicators appear in a winning sequence according to a first random number generation, the selection and display of the remaining indicator or indicators is paused and an offer to buy-out the player is presented. For example, a person with four "$" on the first four reels and the last reel spinning is one step from a jackpot, (e.g. $2,000,000) and if the machine has a 20/1 odds to get the last reel on a "$" then the operator could offer to buy-the spin for $100,000, or any fraction of it for the proportionate amount. If the player accepted the buyout, the machine would print a cash-out ticket for the buyout amount.

The player either accepts the offer, in full or in part, or rejects the offer whereupon the random number for the remaining wheel is generated and the spin is completed. If the buyout was accepted and the final indicator selection results in a win, then the operator banks the amount of the jackpot. If the player sells only a fraction of the potential jackpot, then the player receives credits, either on the machine or in a ticket print, of the fractional remainder and the operator banks the balance.

It is anticipated that the concept will provide great drama and a limited period for it to be resolved, and allow players to trade and control their fate. From an operator standpoint, there may be a limit on the duration of the buyout offer, for example thirty seconds or one minute. This may be counted down for the player on the display, so that the player is forced to make a decision or simply allow the time to expire and the last indicator to be selected. While in theory the system could be used as soon as a single indicator is selected, it is believed that the system is more practically implemented when there are several indicators that must align before extending the final spin to provide the buyout or trade-in option. Thus, it is contemplated that the option would not be provided until the bet/selection has been 70-90% resolved or else the value of the buyout option is not sufficient to entice the player to cash-out and the progress and rate of play may be unacceptably slowed down.

The slot machine based system provides additional benefits to the house or casino in which the machine is located. First, for an in-house only progressive or pool game system, the buy-back option allows the house to bid on and potentially receive (if the bid is accepted) the accumulated jackpot pool. In addition, in the event that the jackpot pool is a progressive or pool game distributed over a number of properties, so that the jackpot pool will grow faster or in the event that a gaming machine manufacturer licenses the use of the machines across various properties, the casino hosting the game (or the gaming machine OEM) may offer the buy-out of the jackpot pool option at the termination of any spin, including the first spin and, again if the bid is accepted, the casino making the offer would receive the jackpot pool as if it were the player who had won. In this situation, the host casino would generate revenues from the game play contributed to the jackpot pool that occurred in other casinos. They can also make money by buying back at less than actual value, i.e., charging margin on the sold ticket or fraction of a ticket

In accordance with the buy-out pool option of the present disclosure, the cash out button of the gaming machine **26** may be illuminated when the first sequence of the display for example the first three of four reels align such that the player may be on track to win the Jackpot Pool. In that event, the central server system **12** or the wager terminal itself causes the display to present a buy-out offer to the player. If the player elects to cash-out, the player may push the cash out button and cash out to receive a cash payment or other suitable form of payment corresponding to the offer presented on the display, whereupon the remaining random selection is made to determine if the Jackpot Pool is won.

In one embodiment, the player may be offered the option of cashing out a percentage of the potential Jackpot Pool, for example by depressing the cash out button the players sells 10% or 25% of the potential Jackpot Pool for the amount offered on the display. If the player for example sells 50% of the Jackpot Pool opportunity for $50,000, the player will be issued a credit for the $50,000 and then the remaining wheel spin or leg is completed. If the result is a win of the Jackpot Pool, then the player will receive credits for 50% of the Jackpot Pool, while the operator or house retains the remainder.

When the player decides to end the game play, he can select the cash out button at which time the player may receive cash or other payout mechanisms such as tickets or credit slips redeemable by a cashier (or other suitable redemption system) or funding to the player's electronically recordable identification card or the player's online account.

It is further contemplated that the jackpot buyout option and the concept and system disclosed herein can be adapted for a variety of other 'multi leg,' multi-outcome wagering scenarios, such as, for example, keno, poker, racing, video games (including live and online video games, as examples) and lotteries, including but not limited to private, public, state, national, international, social (e.g., health care or social lottery types) or any other type of lottery systems, etc. For example, in a lottery system, after the periodic ticket purchase interval, the lottery operator may draw a defined number of items, such as numbered balls. As should be understood any indicators other than numbers may also be utilized where desired, such as symbols, colors, pictures, etc. In addition, the game may comprise items other than randomly drawn balls where desired, or pre-printed numbered tickets, that then may be selected by balls or random numbers or other process. Any of the type of wager input devices described above in connection with FIG. **1** may be used, or alternatively a conventional lottery machine may be utilized for input of player handpicked numbers, for providing electronically generated numbers, such as quick pick or smart pick numbers, and providing a record of the lottery numbers for the player, such as by printing of a ticket. In addition, a plurality of wager input devices or lottery machines may be utilized and each in communication with a server system controller. The total amount of numbered balls making up the lottery system may be any desired number.

In addition, the lottery system may be comprised of different legs by having one or more balls drawn at any given time that make up each leg. In this example, each of the balls may be selected in any desired manner, such as being hand selected from a container or selected via conventional lottery machines, such as gravity pick machines, air mix machines, or via computerized random number generators, as examples. The lottery system could also be set up in any desired manner for how players may win. For example, it could be an all or nothing arrangement where a player must win all legs to win a final Jackpot, or win a defined number of legs to win one or more interim Jackpots before all legs are completed, etc.

In addition, a buy-out offer (or partial buy-out offer) may be made at any time after a ticket is obtained until completion of the event, including (without limitation) after a predetermined number of numbers have been drawn, to a player and the player may sell all or a portion of their ticket. The buy-out offer may also come from a single party or multiple parties; for instance, multiple parties operating in collaboration or multiple parties that may not be operating in collaboration (for example, where the lottery system may "bring" certain parties together for purposes of accumulating adequate resources for purposes of a buy-out offer being made). In certain examples, the party or parties buying all or part of the ticket in response to an accepted buy-out offer will obtain legal ownership of the ticket (100% ownership or a fractional ownership share where only a part is sold, i.e., where both the buyer and seller will end up with part ownership), and will be entitled to win at least a portion of any future Jackpots or other prizes that may occur from the point of purchase moving forward (or even share in the proceeds of prior Jackpots or

prizes if set up in that manner). In certain other examples, the party or parties buying all or part of the ticket in response to an accepted buy-out offer will not obtain legal ownership of the ticket, but merely obtain an entitlement (e.g., a contract) to win at least a portion or all of any future Jackpots or other prizes that may occur from the point of purchase moving forward.

As should be understood, wherever the term "party" is used throughout this disclosure it should be broadly construed to comprise a single entity or plurality of entities. Also, its should be understood that both the player or ticket owner as well as the party making the buy-out offer may be comprised of a single entity or a plurality of entities.

The value or price of the buy-out offer and/or ticket sold may be variable as may be desired. For instance, the value or price of the buy-out offer can be set by various sources, and be based on any objective and/or subjective standards, such as an auction, a calculated probability (e.g., of winning one or more legs of a multi-outcome wagering event), random-number-generated probabilities, a lottery system similar to server system **12** discussed above, a party or parties initiating the buy-out offer, an independent third party/parties or resource (s), such as the system operator, the seller of the ticket, and/or it may be the byproduct of negotiations or a barter between the buyer and seller to arrive at an acceptable price, etc. In addition, the value or price can also be affected by the number of parties receiving a buy-out offer; for example, an amount X where there is one party and X divided by 3 where there are 3 parties, etc. As for timing, the buy-out offer could be made prior to any legs occurring or at any time prior to completion of the event, such as between any of the defined number of legs, and may be made just to winners or to any other parties, such as partial winners or to players who have not won at all, but who still have an active ticket, such as before any legs have been completed or a ticket that has separate divisions, etc. In addition, the value or price relating to a particular buy-out offer (or ticket sold) may be represented, conveyed or otherwise characterized in any desired manner, such as, and without limitation, as a jackpot or portion thereof (e.g., as at least a portion of at least one jackpot; for example, a designated jackpot that may be smaller (i.e. in value and/or price) than a larger jackpot that may be available to a winner/winners of a multi-outcome wagering event and set by any of the various sources above), as a prize, a payment, an award (e.g. monetary and/or nonmonetary awards, such as those described above), or any other suitable manner. Separate and apart from buy-out offers, tickets may be exchanged or transferred from one player to another or to any other party or entity type and at any desired time, and with legal ownership also being transferred at the same time. In some circumstances there may be merely an exchange of tickets and no other value or payment made from one party to another. In other circumstances there may be a value or payment made from one party to another, which can comprise anything the parties may agree to, such as some form of monetary payment or credit, or some other form of "value", such as, without limitation, any goods or services or incentives, etc.

In one example of a lottery system, the first x number of balls would be drawn at one or more predetermined times, such as from one "barrel", which would correspond to one or more legs, and after a delay of a certain interval, such as one week, the last leg or bonus ball would be drawn. For instance, 5 balls would be drawn on a weekend day and make up the first leg, although any other day may be utilized as well, or even a shorter or longer interval, such as within minutes or hours, or a desired number of days, weeks, months or years. Also, as should be understood, the number of balls drawn making up the first leg may vary as well, such as fewer or more numbered balls. A determination would then be made as to the number of tickets having the correct numbers. This may be accomplished electronically via the server system controller. In certain examples, the determination may involve identifying tickets having all 5 numbers correct. However, in other examples, the determination may involve identifying those tickets that have some designated number of balls correct less than 5, such as 4 out of 5, or 3 out of 5, or 2 out of 5 or 1 out of 5, etc. In addition, in certain examples the particular order or sequence of numbers on a ticket are required to correspond to the order of the balls drawn to be considered correct. In certain other examples, the order or sequence of numbers on a ticket do not need to correspond to the order of the balls drawn; so long as the ticket contains the requisite number of balls that were drawn somewhere on the ticket (irrespective of the order drawn). Any number of the holders of tickets having the correct numbers may be provided with a buy-out offer, conducted as a fixed price offer (that may not be consistent to each player, if some players hold the same terminal number as others and as such are only eligible to share the jackpot), or as part of an auction system where a limited number of "buy outs" may be offered, as examples, followed by a drawing or drawings to determine the winners from the remaining ticket holders that did not accept the buyout offer. In addition, with respect to those examples where a ticket having less than all balls correct would qualify, the particular buy-out offer may be relevant to the number of balls that are correct, for example, a larger buyout offer the more correct numbers on a ticket, and/or entitlement to a larger or better prize or a bonus the more correct numbers on a ticket, etc. Alternatively, any of the players having winning tickets (or those having a certain amount of correct numbers) may qualify for a supplemental lottery drawing, which could be the final leg(s) of the lottery or a bonus round, as examples. For instance, the qualified players may select or obtain one or more additional number or numbers on a new ticket for purposes of the supplemental drawing. For example, the supplemental drawing could be in the form of a bonus ball, and the winner or winners matching the bonus ball would win or share in the Jackpot or a bonus Jackpot.

For instance, in this example, each of the holders of tickets having the correct numbers (or any other desired number of ticket holders) may be offered to attend the draw of the remaining number or numbers in an organized event, such as via a live event attended by all holders in person at a defined location, or attended by a communications medium from an offsite location, such via a video conference or web interface, such as Skype or ooVoo, as examples (perhaps the following week or other desired time). In addition, the live event could be made accessible for viewing by the public, such as an in person audience, or more generally viewed over any mass communications medium, such as broadcast over television, cable, satellite, the internet, radio, mobile communication device (e.g., mobile phones, tablets, computers, PDA (personal digital assistant), etc.), social media or any other desired medium. As an example, the lottery system may be set as a reality show that is viewed live or pre-recorded and broadcast over television or other medium to the viewing public. In addition, in this example, before the remaining number(s) are selected, the lottery operator may provide remaining ticket holders with a buyout option, available to a limited number of players or all of them on occasion. Further, in this illustration, a bidding process may be included as an option, which would have the effect to add drama to the conclusion of the game. For instance, the buyout bid could potentially be provided to all the people at the same amount for their ticket and let them

rush to accept, and with the bidding process closed once a certain percentage have "sold" their ticket in response to the buyout offer, and then the last ball or balls would be drawn. As an alternative, for example to maximize interest and tension for television purposes, the bonus ball (or last leg or alternatively any other leg) may be determined by a multi-step process of elimination, resulting in one or more remaining numbered balls that are then used to compare against the players tickets to determine if there are any winners (i.e., removing one or more balls in each leg, and including a plurality of legs so that more and more balls are removed over time, until just a certain number of balls remain, such as one ball), rather than a process of selecting one or more balls in one action that are used to compare against the players tickets, but either process may be used as desired. Additionally it may be possible that between each elimination process or leg (or fewer than each but between specified legs) the individuals still eligible for a prize may or may not be offered an additional chance to "cash in their ticket" with a subsequent buy-out offer or offers, and the buy-out offers may also be increasing in value as their probability of winning increases as the event proceeds toward the last leg or bonus ball. Alternatively, the buyout offer could be provided to less than all players, at different times, at different amounts, and/or having a defined period of time for players to accept the buyout bid. It should be understood that the multi-step process of elimination may be used in any manner in connection with a lottery system, such as, including for either or both of any initial lottery drawings or any bonus drawings.

Further, the percentage of players required in order to trigger the close of the bidding process may be established at any desired value, for instance, ranging all the way up to 100% of the players that have accepted the buyout offer. The lottery operator may assume the ownership of the ticket from the players that have accepted the buyout offer. Any winners after the final number(s) are drawn would receive or share in the jackpot. If there is no winner, in one implementation the jackpot may be rolled into another game or event. Alternatively, players may also be allowed to sell a fraction of their tickets in response to a buy-out offer, to ensure the game is not 100% binary as an option, and with the proportion being any desired amount, such as being subject to commercial considerations of drama, and interaction of players.

It should be understood that various changes and modifications to the presently preferred embodiments and examples described herein will be apparent to those skilled in the art. For instance, each of the features and aspects described in connection with any of the various presently preferred embodiments and examples can also be used in connection with any or all of the other of the presently preferred embodiments and examples alone or in combination, even though not explicitly described therein. Further it should be understood that all of the features and aspects described herein may be provided through use of any suitable hardware, software or combination of both, as may be desired and in any manner. In addition, for example, the gaming system disclosed herein may provide the awards to winning players in any suitable manner, such as through a suitable bonus or secondary game or event determined by the implementer or operator of the gaming system, and may include, without limitation:

1) Dividing any multi (betting/dealing/trading) outcome into its sub components.
2) Allow change of ticket ownership or ticket exchange between players or other entities at any time, including at any point after a ticket is obtained or an event is initiated up through completion of the event, after each stage of the game being resolved, or at any other desired time. The recipient of the ticket that has changed ownership or been exchanged would assume the same position as the original owner; in effect stepping into the shoes of the original owner, and legally supersede the original owner with all rights associated with the ticket. For example, a change of ticket ownership can occur via a buy-out, and the party acquiring the ticket would have all the rights as the original owner, including being entitled to win any award or jackpot that may relate to the ticket in connection with any wagering event. In other examples, legal ownership of the ticket would remain with a player, but the entitlement to any award or jackpot is what would reside with another party where a "ticket change" has occurred, such as through a buy-out, or trading or giving a ticket to another player, etc.

Similarly, a party purchasing a partial buy-out of a ticket (i.e., less than 100% of the rights associated with the ticket) would be entitled to win any award or jackpot for which the ticket is redeemable in proportion to the interest purchased via the partial buy-out. Thus, if the party purchased a 30% interest in the ticket, the party would be entitled to 30% of the winnings for which the ticket is redeemable. As with full buy-outs, partial buy-outs can occur prior to or at any stage of a wagering event.

In an illustrative example of a ticket exchange, a pool may be "seeded" (i.e. a operator may place £3000 worth of bets into the pool) 4-5-6 hours in advance of a particular wagering event. As the public play into a pool becomes significant, rather than continuing to grow the pool (i.e., continuing to add money from bets) and have the operator's commitment to keep the prices inline escalate, the operator can transfer some of the existing seed money or investment to a player buying a tote ticket. Notably, the tote ticket may change ownership in whole or in part, before the pool is closed, or after the pool has closed but before completion of the wagering event.

3) Calculate the odds specifically, allow market forces to determine a sale price, use other particular subjective and/or objective factors, and/or use any desired combination of the foregoing.
4) Allow the ownership of remaining tickets or number to be transparently displayed to the player and or audience, to help cash in or buy-back offers or process.
5) Transact, with or without a bidding process or joint bidding process, or auction the ticket exchange. The implementer or operator of the gaming system disclosed herein may also designate the number of awards, the time at which those awards are provided to each winning player, the number of rounds in the bonus event, the number of designated outcomes in each round and/or the number of available outcomes in each round to suitable values.

Such changes and modifications can be made without departing from the spirit and scope of the present disclosure and without diminishing its intended advantages. For example, any of the concepts and features described in connection with any example, embodiment or variation herein may also apply and be utilized in connection with any other example, embodiment or variation described herein alone or in combination. In addition, any of the concepts and features disclosed herein may be provided by appropriate hardware, software and/or combination of both hardware and software where desired and deemed appropriate. It is therefore intended that such changes and modifications be covered by the appended claims.

The invention claimed is:

1. A method of conducting a wagering event for one or more players, wherein a player is presented with at least one

of a buy-out offer and a partial buy-out offer prior to completion of the wagering event, the method comprising the steps of:

providing one or more wagering input devices in communication with a system controller through which one or more players may participate in a wagering event, said system controller being adapted for:

initiating the wagering event for one or more players;

receiving a wager via the one or more wagering input devices in response to a player desiring to participate in the wagering event;

identifying one or more players eligible to win from among players participating in the wagering event;

initiating at least one of a buy-out offer and partial buy-out offer to any number of the one or more players that are eligible to win, said buy-out offer or partial buy-out offer being initiated at any time before the wagering event has been completed;

identifying any acceptances of said at least one of a buy-out offer and partial buy-out offer that have been initiated;

completing the wagering event; and

determining if any of the players have won.

2. The method of claim **1**, wherein the one or more players are eligible to win an award comprising one or more selected from the group consisting of monetary awards, nonmonetary awards, a prize, a payment, a designated currency, virtual currency, tokens, credits, coupons, services, personal property, real property, virtual property, assets, investments, negotiable instruments, commodities, food, lodging, entertainment, alleviation of obligations, gaming opportunities and wager enhancement.

3. The method of claim **1**, wherein identifying any acceptances of said at least one of a buy-out offer and partial buy-out offer further comprises that each of the players accepting the buy-out offer will no longer be eligible to at least exclusively win an award, wherein each of the players not accepting the buy-out offer will remain eligible to win an award, and wherein each of the players accepting a partial buy-out offer remains eligible to win at least a portion of an award.

4. The method of claim **1**, wherein each the wagering event comprises one or more selected from the group consisting of sporting events, lotteries, real games and virtual games, and wherein the wager comprises a potential outcome.

5. The method of claim **4**, wherein the wager is one or more of selectable by being handpicked by the player, provided electronically on request of the player through communication between the one or more wagering input devices and the system controller, provided via a random number generator associated with the system controller, a quick pick or a smart pick.

6. The method of claim **4**, wherein the games comprise one or more selected from the group consisting of slot machines, keno, poker, video games and racing.

7. The method of claim **1**, wherein accepting a partial buy-out offer comprises a player accepting less than the buy-out offer amount, said acceptance resulting in the player remaining eligible to win at least a portion of at least one award.

8. The method of claim **1**, wherein the buy-out offer is initiated on behalf of at least one of a third party and a player, and when a buy-out offer is accepted, the third party becomes eligible for winning at least a portion of an award.

9. The method of claim **1**, wherein the system controller is further programmed to provide an award, or any fractional portion thereof, upon the completion of the wagering event.

10. The method of claim **1**, wherein the multi outcome wagering event comprises one or more virtual games, said method further comprising:

initiating the buy-out offer prior to completion of the one or more virtual games, but after an outcome of the one or more virtual games has been determined,

said buy-out offer including a price that is at least partially based on random-number-generated probabilities.

11. The method of claim **1**, further comprising initiating a bidding process among a designated number of players interested in accepting at least one of a buy-out offer and partial buy-out offer, and closing the bidding process after a certain span of time or after a certain number of the buy-out and partial buy-out offers have been accepted.

12. The method of claim **1**, wherein one or more interim awards are awarded prior to completion of the wagering event.

13. The method of claim **1**, further comprising awarding at least one consolation award where a consolation scenario is won, and wherein said consolation scenario comprises finishing within a predetermined position of a corresponding winner.

14. The method of claim **13**, wherein there is a span of time before the wagering event is completed, and the wagering event is completed in a live or pre-recorded event attended by the players eligible to win an award, a portion thereof, or a bonus prize.

15. The method of claim **14**, further comprising initiating a buy-back offer, prior to the wagering event being completed, to at least one player eligible to win the award, the portion thereof, or the bonus, said buy-back offer being for a portion of an entirety of said award, said portion thereof, or said bonus prize.

16. The method of claim **14**, wherein the live or pre-recorded event is a reality show that is broadcast over a mass communications medium.

17. The method of claim **16**, wherein the mass communications medium comprises at least one of television, satellite, cable, the Internet, mobile communication device, social media and radio.

18. The method of claim **1**, wherein the one or more wagering input devices are adapted for generating a wager for a player reflecting one or more predicted outcomes of the wagering event.

19. The method of claim **1**, wherein ownership or partial ownership of the wager may be changed from player to player at any time before or during the course of the wagering event; and wherein the system controller is further adapted for identifying the ownership status of the wager.

20. The method of claim **1**, wherein the wager further comprises a list that is at least one of printed on a ticket, printed on a voucher, and displayed via the one or more wagering input devices.

21. The method of claim **1**, wherein the one or more wagering devices comprise at least one of a wagering terminal, a wagering workstation, a personal computer, a smart phone, a tablet computing device, a gaming machine, a slot machine, and a lottery machine.

22. The method of claim **1**, wherein the wagering event comprises a pool or is progressive, wherein said pool is at least one of fixed, variable and guaranteed.

23. The method of claim **1**, wherein where there are no winners of at least one award, said at least one award is rolled into another wagering event or at least partially awarded to an operator of the wagering event.

24. The method of claim **1**, wherein the wagering event comprises at least one of a bonus and a consolation,

wherein designated players who have won qualify for the bonus and designated players who have lost qualify for the consolation, and

wherein correctly predicting an outcome of the bonus qualifies at least one designated player for at least a portion of a bonus prize and correctly predicting an outcome of the consolation qualifies at least one designated player for at least a portion of a consolation prize.

25. A wagering system including one or more wagering input devices for allowing the placement of a wager on a wagering event, the wagering system comprising:

a system controller configured to communicate with the one or more wagering input devices, said system controller configured to:

initiate the wagering event for one or more players;

receive a wager via the one or more wagering input devices in response to a player desiring to participate in the wagering event;

initiate one or more of at least one of a buy-out offer and a partial buy-out offer to any number of the one or more players before the wagering event has been completed;

identify any acceptances of the at least one of a buy-out offer and partial buy-out offer;

complete the wagering event; and

determine if any players have won.

26. The wagering system of claim **25**, wherein the wagering event comprises at least one of an entire sporting event, a partial sporting event, a divisible component of a sporting event, multiple independent sporting events occurring sequentially or concurrently, and a compilation of related sporting events.

27. The wagering system of claim **25**, wherein the wagering event comprises at least one of a bonus and a consolation,

wherein designated players who have won qualify for the bonus leg and designated players who have lost qualify for the consolation leg, and

wherein correctly predicting an outcome of the bonus qualifies at least one designated player for at least a portion of a bonus prize and correctly predicting an outcome of the consolation qualifies at least one designated player for at least a portion of a consolation prize.

28. The wagering system of claim **25**, wherein the wager comprises at least one of an accumulator and parlay wager comprising at least one or more combinations, wherein the one or more combinations are selectable by at least one of a player, a third party, and the wagering system, and wherein at any time before the wager has been completed, at least one partial buy-out offer is initiated to any number of the one or more players remaining eligible to win at least one of an award or a portion of an award.

29. The wagering system of claim **25**, wherein the one or more players are eligible to win an award comprising one or more selected from the group consisting of monetary awards, nonmonetary awards, a prize, a payment, a designated currency, virtual currency, tokens, credits, coupons, services, personal property, real property, virtual property, assets, investments, negotiable instruments, commodities, food, lodging, entertainment, alleviation of obligations, gaming opportunities and wager enhancement.

30. The wagering system of claim **25**, wherein identifying any acceptances of said at least one of a buy-out offer and partial buy-out offer further comprises that each of the players accepting the buy-out offer will no longer be eligible to at least exclusively win an award, wherein each of the players not accepting the buy-out offer will remain eligible to win an award, and wherein each of the players accepting a partial buy-out offer remains eligible to win at least a portion of an award.

31. A wagering system including one or more wagering input devices for allowing the placement of a wager on a wagering event, the wagering system comprising:

a system controller configured to communicate with the one or more wagering input devices, said system controller configured to:

initiate the wagering event for one or more players;

receive a wager via the one or more wagering input devices in response to a player desiring to participate in the wagering event;

initiate one or more of at least one of a buy-out offer and a partial buy-out offer to any number of the one or more players before the wagering event has been completed; and

identify any acceptances of the at least one of a buy-out offer and partial buy-out offer.

32. The wagering system of claim **31**, wherein the one or more players are eligible to win an award and the system controller is further configured to determine if any of the one or more players have won the award.

33. The wagering system of claim **32**, wherein the award comprises one or more selected from the group consisting of monetary awards, nonmonetary awards, a prize, a payment, a designated currency, virtual currency, tokens, credits, coupons, services, personal property, real property, virtual property, assets, investments, negotiable instruments, commodities, food, lodging, entertainment, alleviation of obligations, gaming opportunities and wager enhancement.

34. The wagering system of claim **31**, wherein the wagering event comprises one or more selected from the group consisting of sporting events, lotteries, real games, virtual games, live events, pre-recorded events, online events, broadcast events, slot machines, card games, keno, video games and racing.

35. The wagering system of claim **31** wherein the wagering event and wager comprises one or more of fixed odds single wagers, multiple wagers, full cover wagers, full cover wagers with singles, 'Any to Come' (ATC) or 'if cash' wagers, specialty wagers, forecasts, fixed, variable, guaranteed, parimutuel wagering, fixed-odds wagering, accumulator or parlay wagering, fixed odds, a pool, progressive, fixed pool, variable pool or guaranteed pool.

36. A method of conducting a wagering event for one or more players, wherein a player is presented with at least one of a buy-out offer and a partial buy-out offer prior to completion of the wagering event, the method comprising the steps of:

providing one or more wagering input devices in communication with a system controller through which one or more players may participate in a wagering event, said system controller being adapted for:

initiating the wagering event for one or more players;

receiving a wager via the one or more wagering input devices in response to a player desiring to participate in the wagering event;

identifying one or more players eligible to win from among players participating in the wagering event;

initiating at least one of a buy-out offer and partial buy-out offer to any number of the one or more players that are eligible to win, said buy-out offer or partial buy-out offer being initiated at any time before the wagering event has been completed; and

identifying any acceptances of said at least one of a buy-out offer and partial buy-out offer that have been initiated.

37. The method of claim **36**, further comprising completing the wagering event and determining if any of the players have won.

38. The method of claim **37**, wherein the one or more players are eligible to win an award comprising one or more selected from the group consisting of monetary awards, non-monetary awards, a prize, a payment, a designated currency, virtual currency, tokens, credits, coupons, services, personal property, real property, virtual property, assets, investments, negotiable instruments, commodities, food, lodging, entertainment, alleviation of obligations, gaming opportunities and wager enhancement.

39. The method of claim **36**, wherein the wagering event comprises one or more selected from the group consisting of sporting events, lotteries, real games, virtual games, live events, pre-recorded events, online events, broadcast events, slot machines, card games, keno, video games and racing.

40. The method of claim **36**, wherein the wagering event and wager comprises one or more of fixed odds single wagers, multiple wagers, full cover wagers, full cover wagers with singles, 'Any to Come' (ATC) or 'if cash' wagers, specialty wagers, forecasts, fixed, variable, guaranteed, parimutuel wagering, fixed-odds wagering, accumulator or parlay wagering, fixed odds, a pool, progressive, fixed pool, variable pool or guaranteed pool.

* * * * *