US006645071B2

(12) **United States Patent**
Perrie et al.

(10) **Patent No.: US 6,645,071 B2**
(45) **Date of Patent: Nov. 11, 2003**

(54) **CASINO BONUS GAME USING PLAYER STRATEGY**

(75) Inventors: **Kenneth Allan Perrie**, Groton, CT (US); **Olaf Vancura**, Las Vegas, NV (US)

(73) Assignee: **Mikohn Gaming Corporation**, Las Vegas, NV (US)

(*) Notice: Subject to any disclaimer, the term of this patent is extended or adjusted under 35 U.S.C. 154(b) by 356 days.

(21) Appl. No.: **09/843,326**

(22) Filed: **Apr. 26, 2001**

(65) **Prior Publication Data**

US 2001/0031659 A1 Oct. 18, 2001

Related U.S. Application Data

(63) Continuation of application No. 09/218,500, filed on Dec. 22, 1998, now Pat. No. 6,398,644.

(60) Provisional application No. 60/068,624, filed on Dec. 23, 1997, and provisional application No. 60/083,658, filed on Apr. 30, 1998.

(51) **Int. Cl.**[7] **A63F 9/22**

(52) **U.S. Cl.** **463/16**; 463/9; 463/18; 463/20

(58) **Field of Search** 463/9, 16, 17, 463/18, 19, 20, 12, 13; 273/267, 268, 269, 270, 274, 292, 138.1, 138.2, 139, 460

(56) **References Cited**

U.S. PATENT DOCUMENTS

5,401,024	A	3/1995	Simunek
5,580,053	A	12/1996	Crouch
5,755,619	A	5/1998	Matsumoto et al.
5,755,621	A	5/1998	Marks et al.
5,772,506	A	6/1998	Marks et al.
5,897,436	A	4/1999	Singer et al.
5,944,605	A	8/1999	Pajitnov
6,015,346	A	1/2000	Bennett
6,093,100	A	6/2000	Singer et al.
6,371,851	B1	4/2002	Singer et al.

FOREIGN PATENT DOCUMENTS

EP	0 862 152 A1	9/1998
EP	0 874 337 A1	10/1998
EP	0 875 870 A2	11/1998
GB	2229371 A	12/1990
GB	2252705 A	12/1992
GB	2271262 A	6/1994
WO	WO 98/09258	3/1998
WO	WO 98/09259	3/1998

OTHER PUBLICATIONS

John Scarne, Scarne's New Complete Guide to Gambling, 1974, pp. 490–499, Simon & Schuster, Inc., New York, New York.

Primary Examiner—Jessica Harrison
(74) *Attorney, Agent, or Firm*—Dorr, Carson, Sloan & Birney, P.C.

(57) **ABSTRACT**

A virtual matrix comprised of a plurality of grid elements is provided, on which a hidden pattern, comprised of a plurality of matrix entries, is randomly placed. A player views a gaming matrix having a plurality of visible positions, each visible position corresponding to one of the grid elements. The player chooses at least one of the plurality of visible positions on the gaming matrix, after which the game displays the corresponding grid element of the virtual matrix on the gaming matrix. Based on the correct number of guesses matching the pattern location, the player is awarded and a media presentation signals the player's success. If the player guesses incorrectly, a second media presentation signals the incorrect guess.

21 Claims, 10 Drawing Sheets

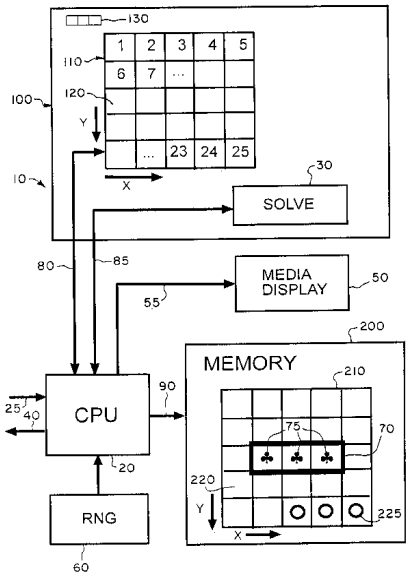

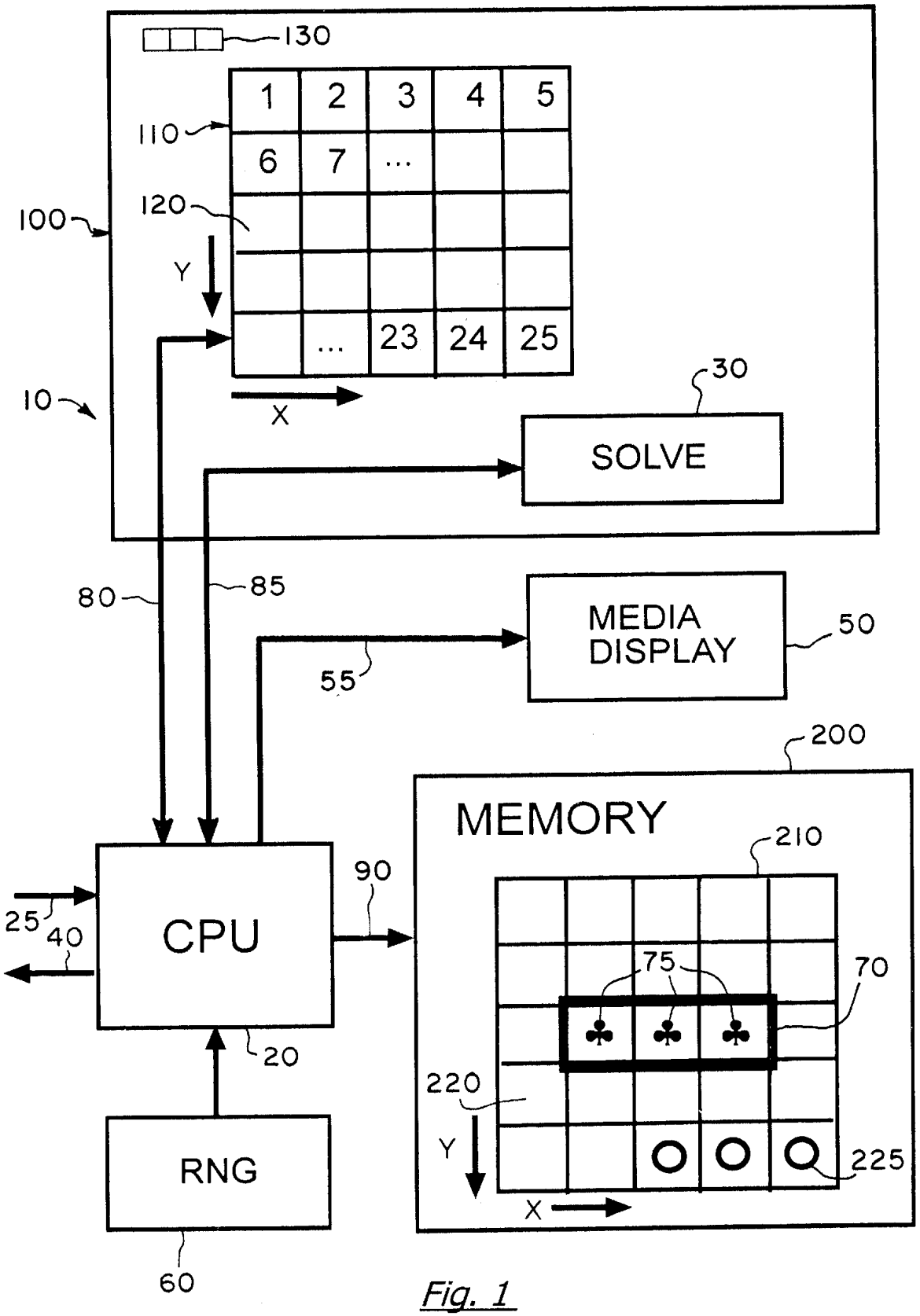
130
1
2
3
4
5
110
6
7
...
120
100
Y
...
23
24
25
10
X
30
SOLVE
80
85
MEDIA
DISPLAY
50
55
200
MEMORY
210
90
25
40
CPU
75
70
20
220
Y
225
X
RNG
60

Fig. 1

Fig. 2

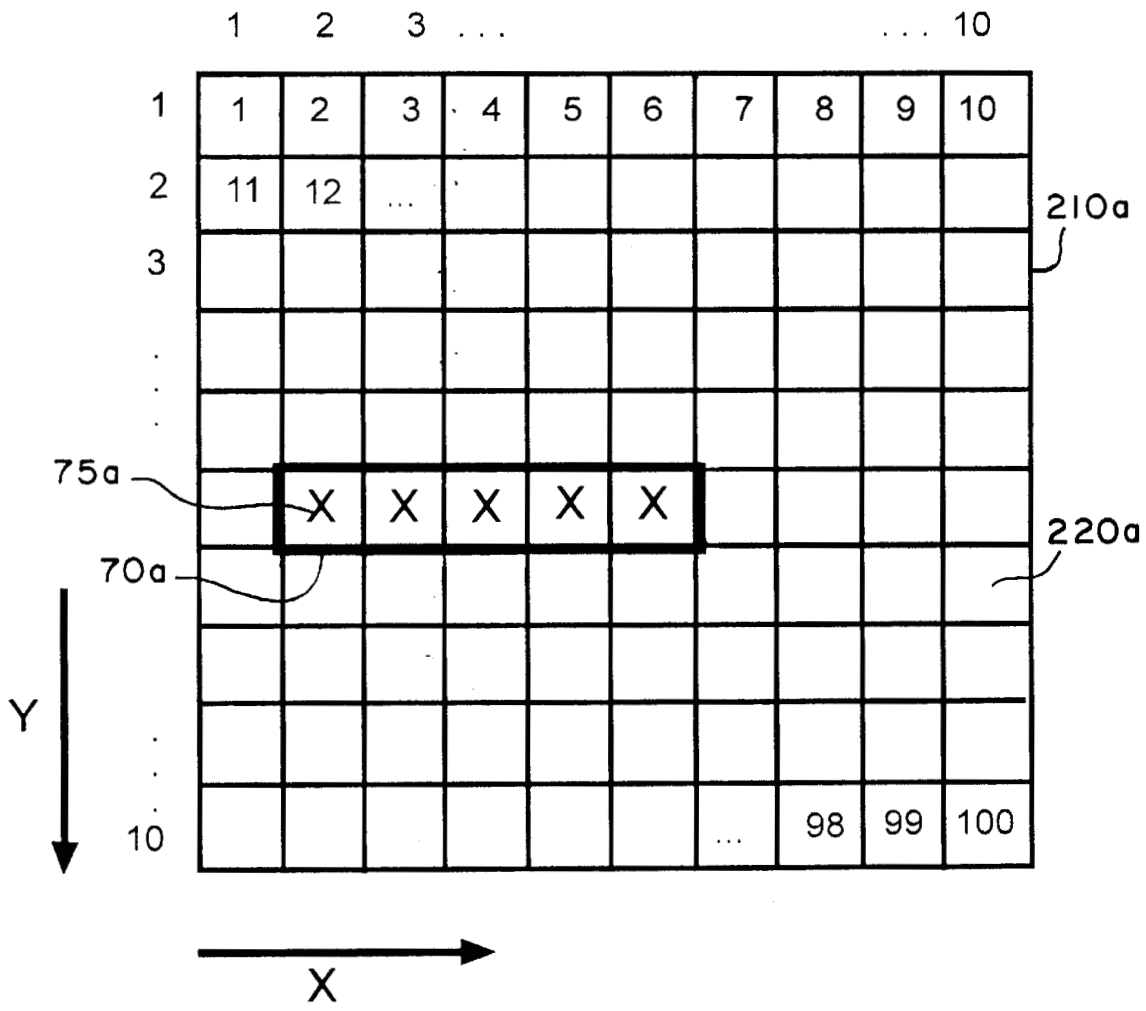
1 2 3 10
1 2 3 4 5 6 7 8 9 10
11 12 ...
210a
75a
X X X X X
220a
70a
Y
98 99 100
X

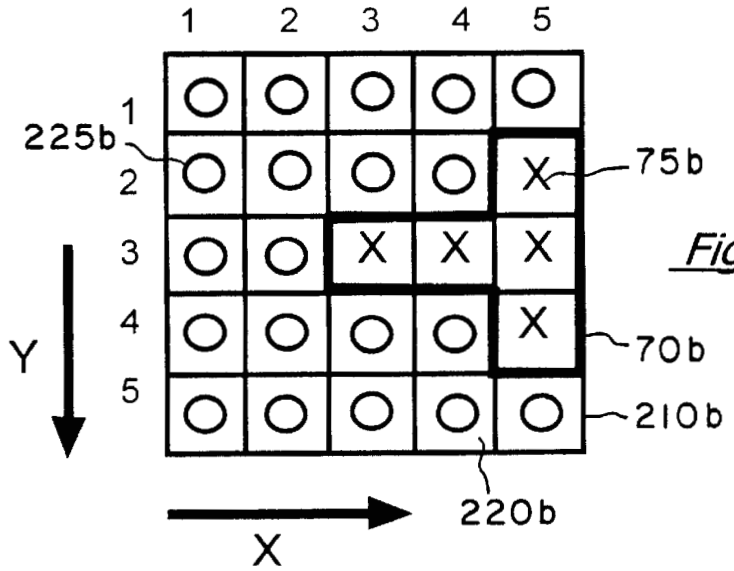
1 2 3 4 5
225b
75b
X
X X X
70b
210b
Y
220b
X

Fig. 3

Fig. 4

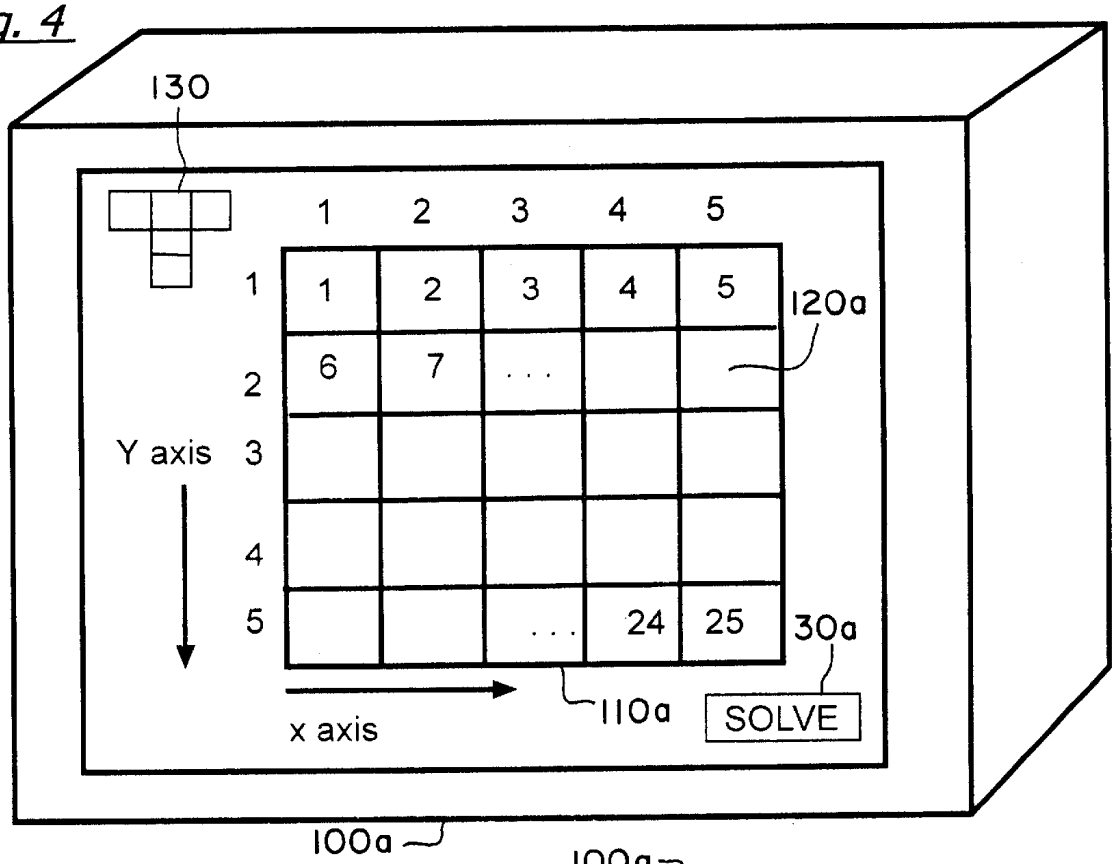
130
1 2 3 4 5
1 2 3 4 5
6 7 . . .
. . . 24 25
120a
30a
110a
SOLVE
Y axis
x axis
100a

Fig. 5

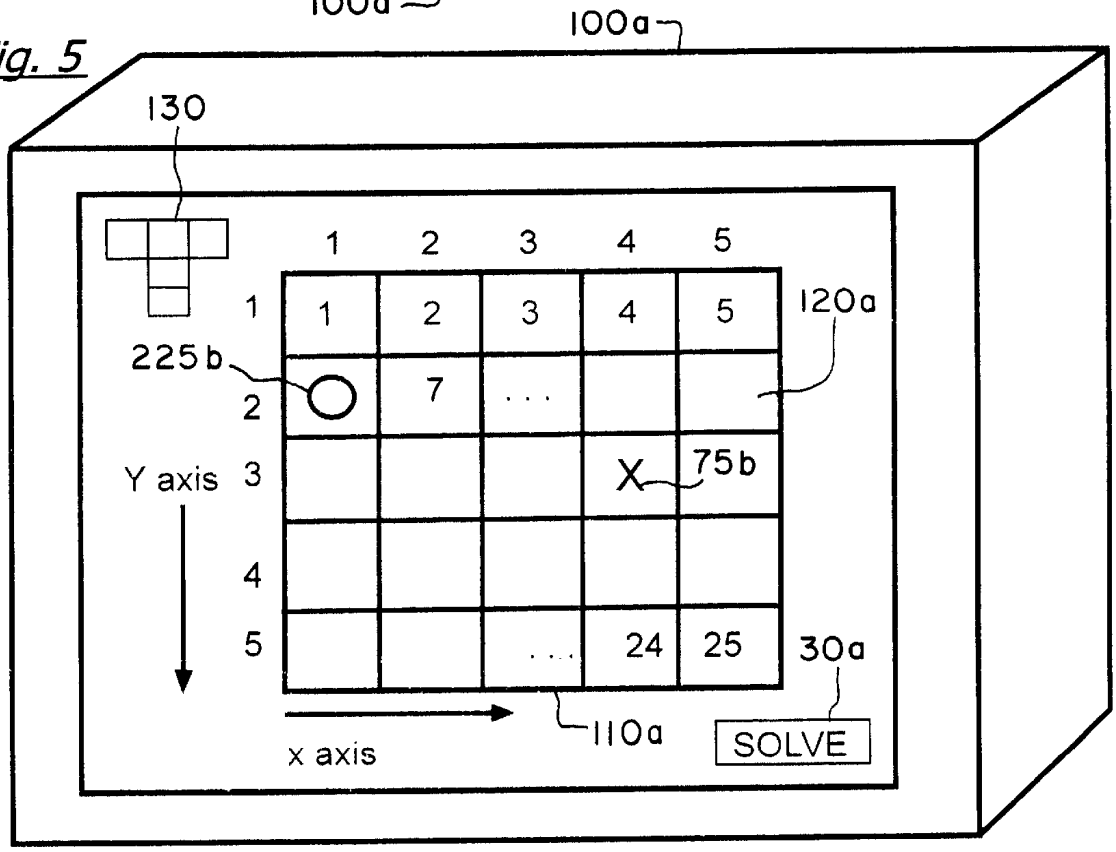
100a
130
1 2 3 4 5
1 2 3 4 5
225b
7 . . .
X
75b
. . . 24 25
120a
30a
110a
SOLVE
Y axis
x axis

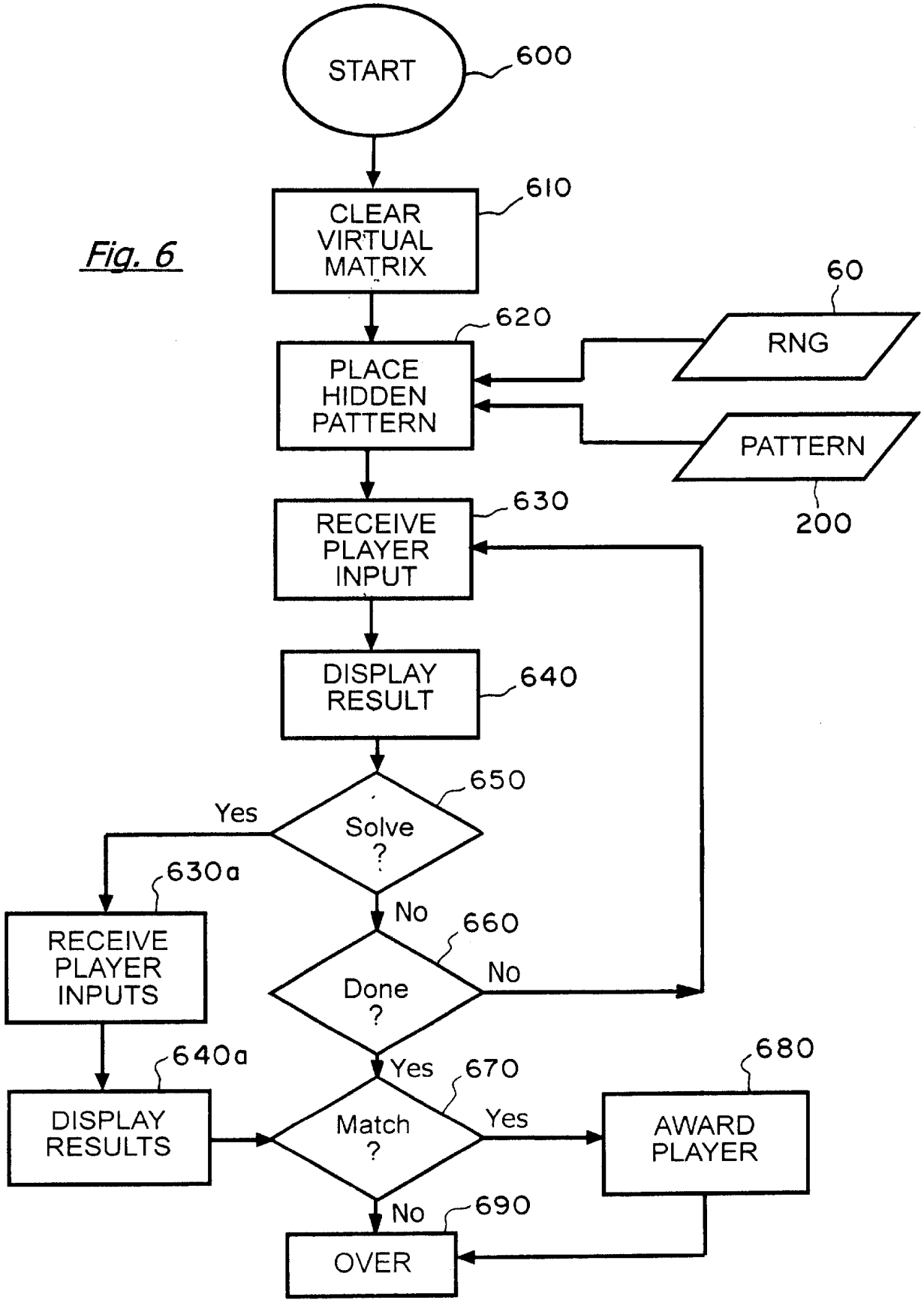
Fig. 6
START
600
CLEAR VIRTUAL MATRIX
610
PLACE HIDDEN PATTERN
620
RNG
60
PATTERN
200
RECEIVE PLAYER INPUT
630
DISPLAY RESULT
640
Solve ?
650
Yes
No
RECEIVE PLAYER INPUTS
630a
Done ?
660
No
Yes
DISPLAY RESULTS
640a
Match ?
670
Yes
No
AWARD PLAYER
680
OVER
690

120c 110c

1	2	3	4	5	6	7
8	9	10	11	12	13	14
15	16	17	18	19	20	21
22	23	24	25	26	27	28
29	30	31	32	33	34	35
36	37	38	39	40	41	42
43	44	45	46	47	48	49

Fig. 7(a)
(Prior Art)

Fig. 7 (b)
(Prior Art)

1	2	3	4	5	6	7
8	9	10	11	12	13	14
15	16	17	18	19	20	21
22	23	24	25	26	27	28
29	30	31	32	33	34	35
36	37	38	39	40	41	42
43	44	45	46	47	48	49

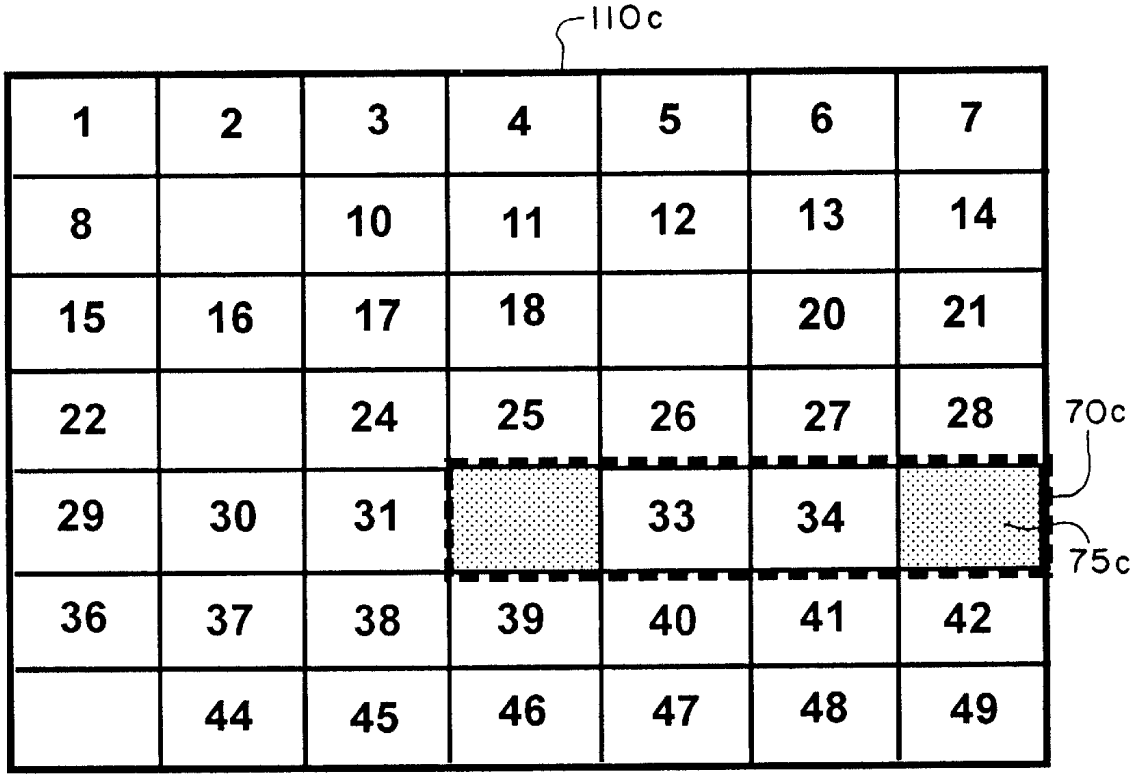
110c
1
2
3
4
5
6
7
8
10
11
12
13
14
15
16
17
18
20
21
22
24
25
26
27
28
70c
29
30
31
33
34
75c
36
37
38
39
40
41
42
44
45
46
47
48
49

Fig. 7(c)

Fig. 7(d)

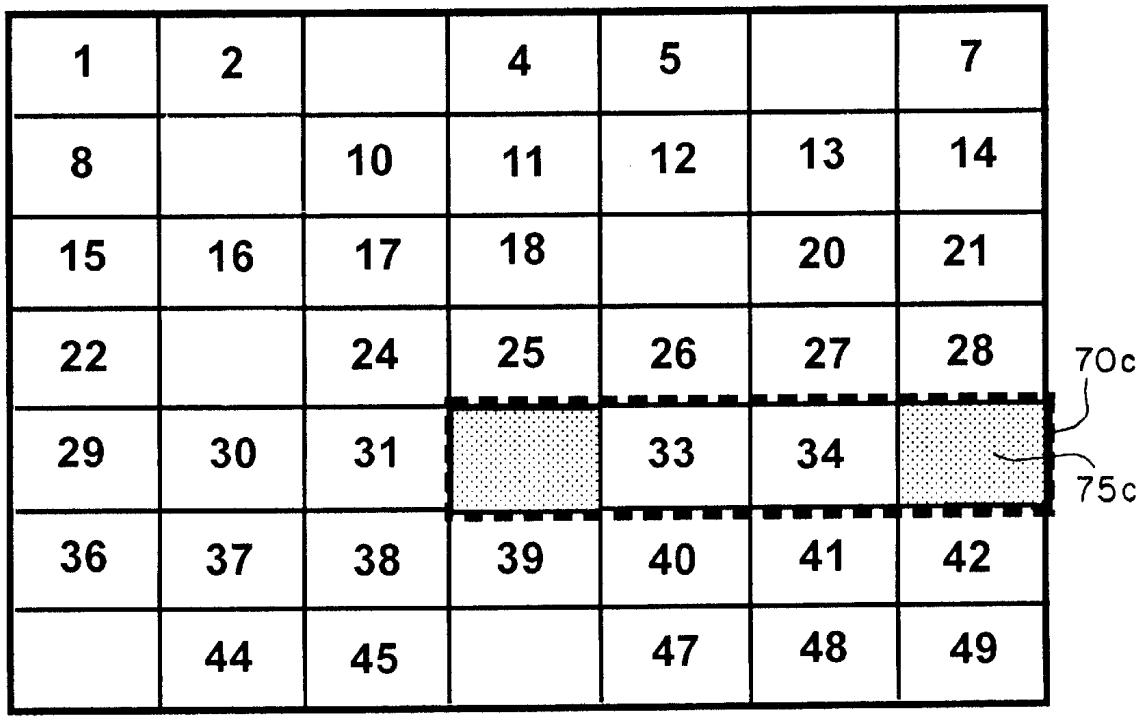
1
2
4
5
7
8
10
11
12
13
14
15
16
17
18
20
21
22
24
25
26
27
28
70c
29
30
31
33
34
75c
36
37
38
39
40
41
42
44
45
47
48
49

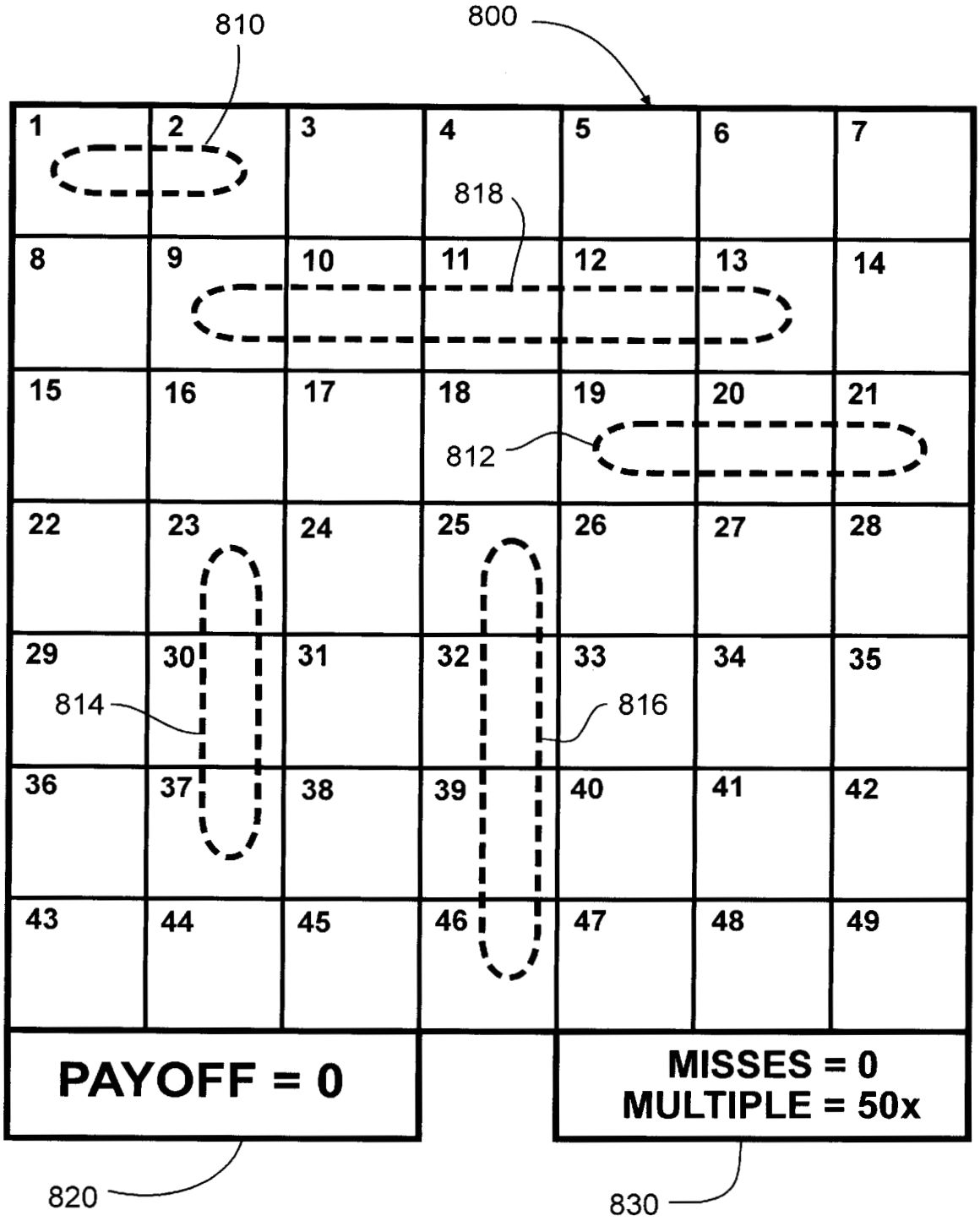
810
800
1
2
3
4
5
6
7
818
8
9
10
11
12
13
14
15
16
17
18
19
20
21
812
22
23
24
25
26
27
28
29
30
31
32
33
34
35
814
816
36
37
38
39
40
41
42
43
44
45
46
47
48
49
PAYOFF = 0
MISSES = 0
MULTIPLE = 50x
820
830

Fig. 8 (a)

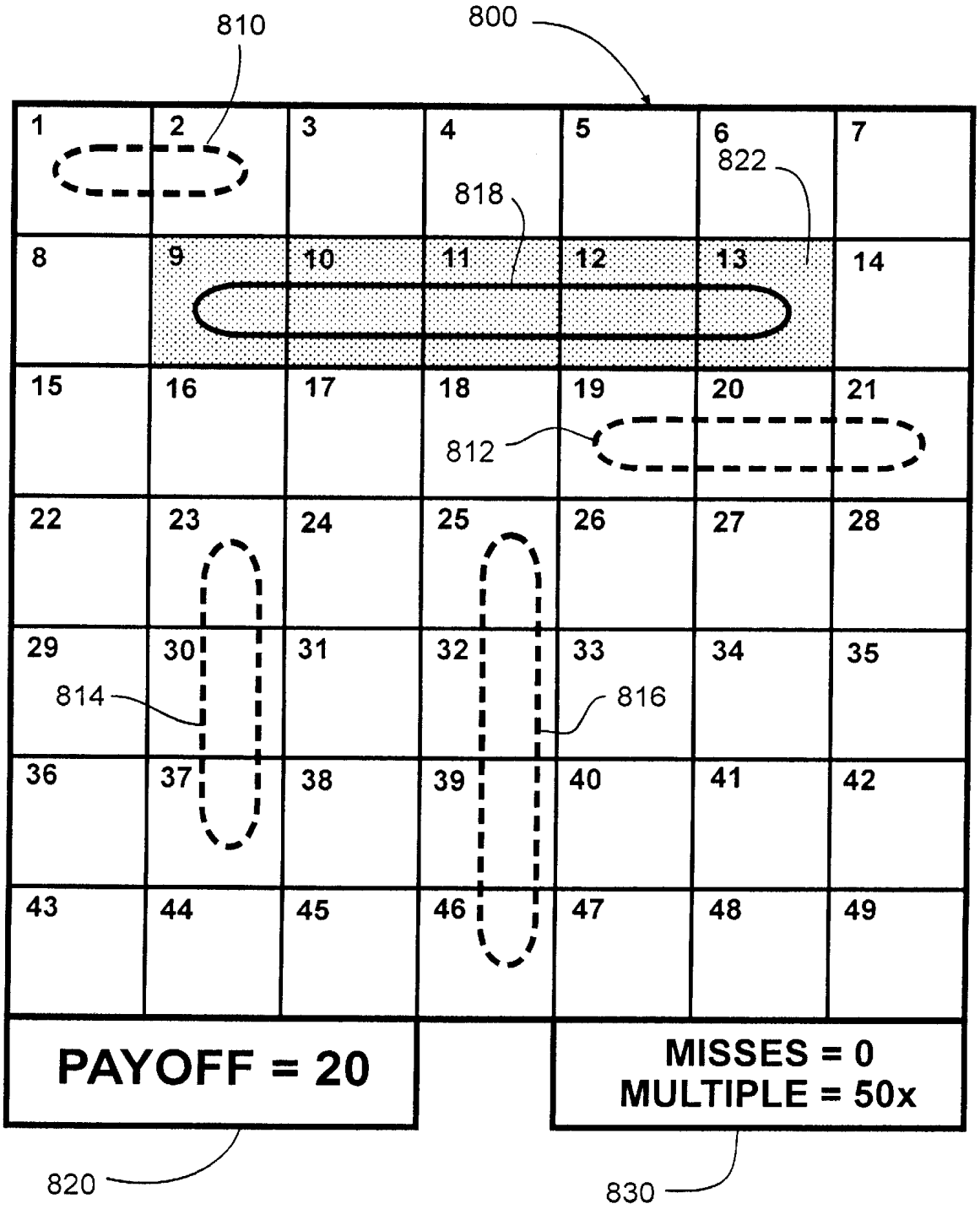
810
800
1
2
3
4
5
6
7
822
818
8
9
10
11
12
13
14
15
16
17
18
19
20
21
812
22
23
24
25
26
27
28
29
30
31
32
33
34
35
814
816
36
37
38
39
40
41
42
43
44
45
46
47
48
49
PAYOFF = 20
MISSES = 0
MULTIPLE = 50x
820
830

Fig. 8 (b)

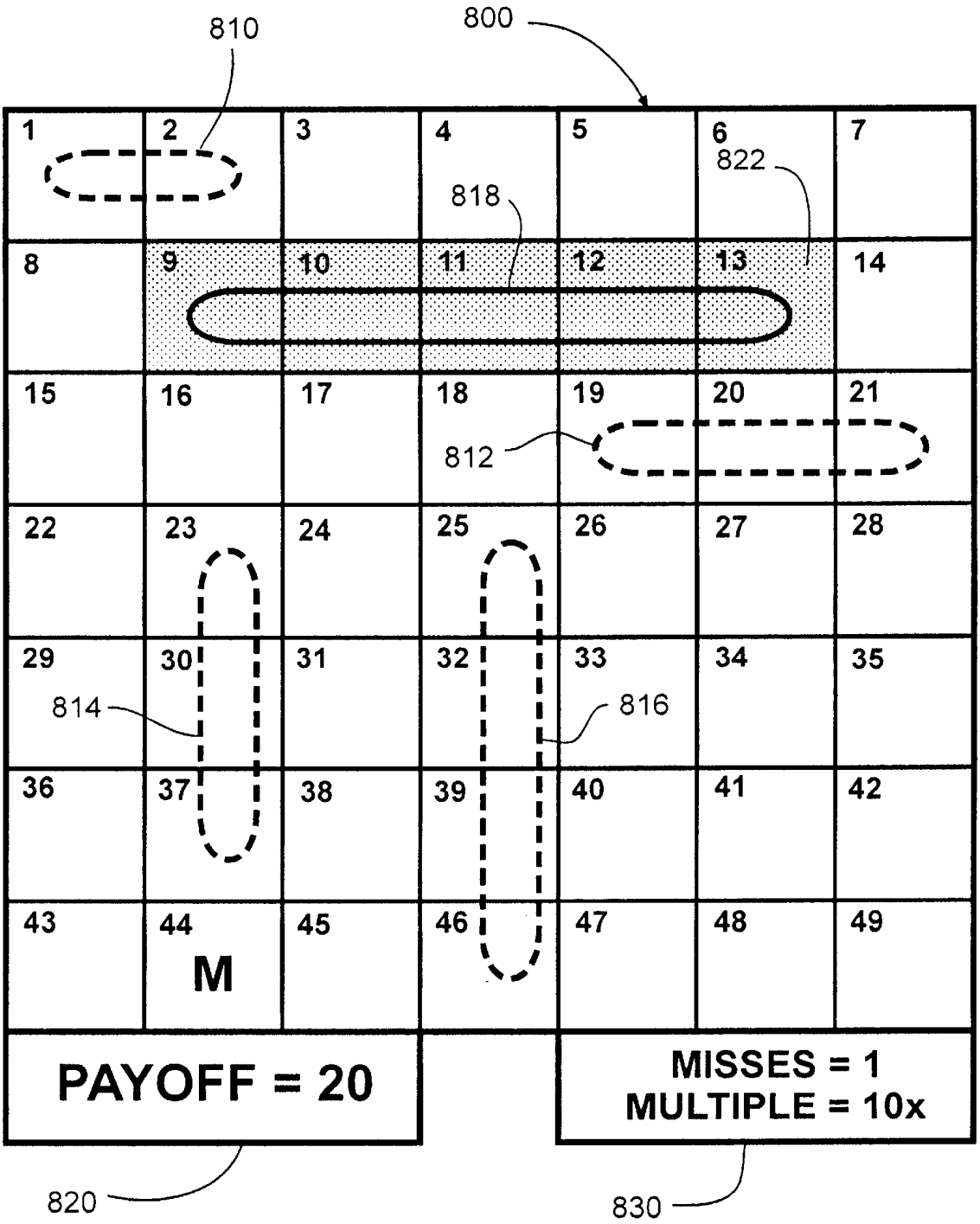
810
800
1
2
3
4
5
6
7
822
818
8
9
10
11
12
13
14
15
16
17
18
19
20
21
812
22
23
24
25
26
27
28
29
30
31
32
33
34
35
814
816
36
37
38
39
40
41
42
43
44
M
45
46
47
48
49
PAYOFF = 20
MISSES = 1
MULTIPLE = 10x
820
830

Fig. 8 (c)

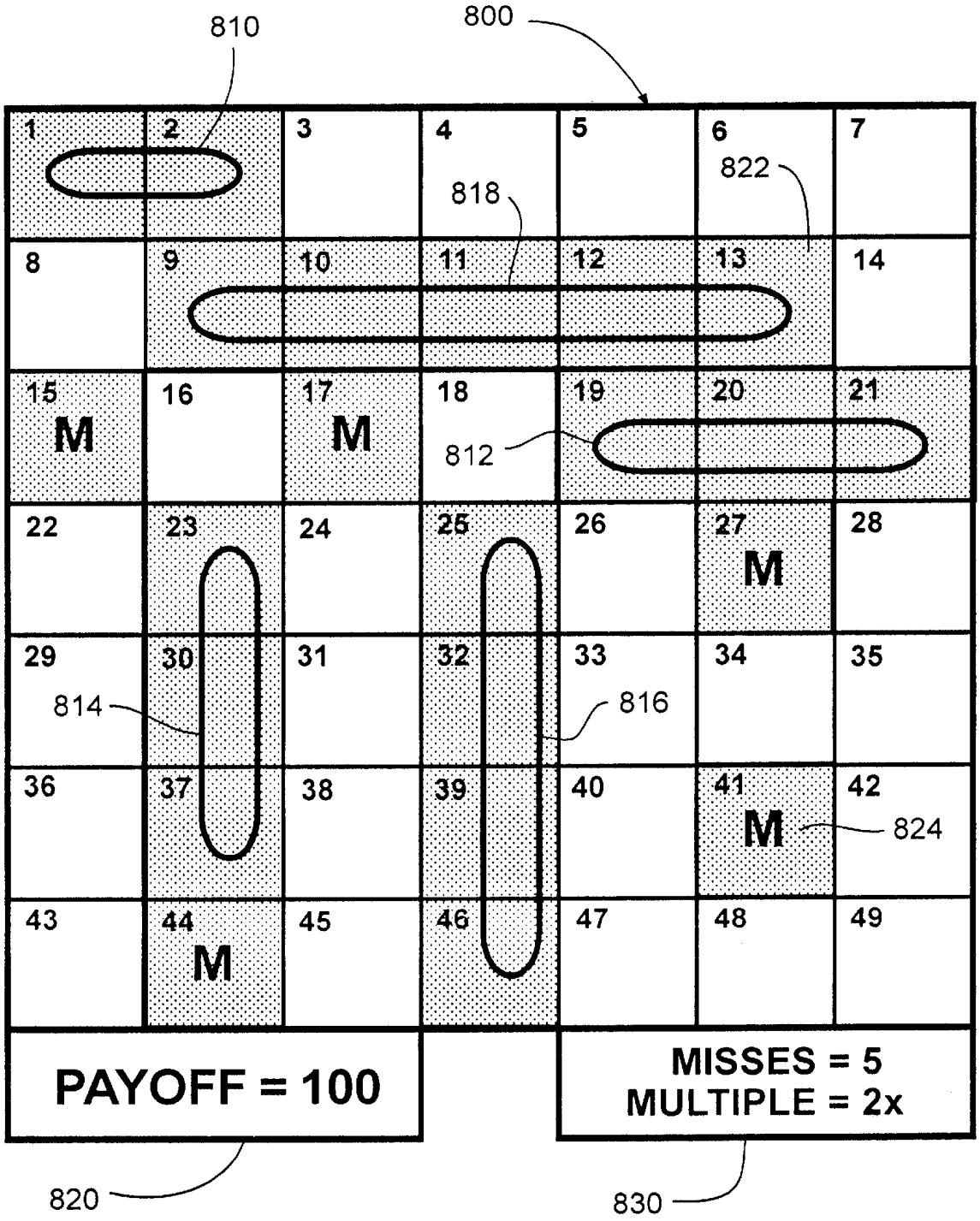
810
800
1
2
3
4
5
6
7
822
818
8
9
10
11
12
13
14
15
M
16
17
M
18
19
20
21
812
22
23
24
25
26
27
M
28
29
30
31
32
33
34
35
814
816
36
37
38
39
40
41
M
42
824
43
44
M
45
46
47
48
49
PAYOFF = 100
MISSES = 5
MULTIPLE = 2x
820
830

Fig. 8 (d)

CASINO BONUS GAME USING PLAYER STRATEGY

RELATED INVENTION

This application is a continuation to Ser. No. 09/218,500 entitled "PATTERN REVERSE KENO GAME METHOD OF PLAY," filed on Dec. 22, 1998 now U.S. Pat. No. 6,398,644 and which claims priority to two provisional patent applications, Ser. No. 60/068,624 filed Dec. 23, 1997 and Ser. No. 60/083,658 filed Apr. 30, 1998, entitled "PATTERN REVERSE KENO GAME METHOD OF PLAY.

BACKGROUND OF THE INVENTION

1. Field of the Invention

The present invention relates to games suitable for play in a casino and, more particularly, to casino bonus games rewarding players using/player strategy.

2. Statement of the Problem

Casino keno, and its close relative, the lottery, generally have the player select a plurality of numbers (lottery) or numbered positions (keno), followed by the house randomly selecting a plurality of numbered balls. Wagers are settled based on the number of matching numbers (or numbered positions). For example, the New York State LOTTO game allows players to select six different numbers in the range 1 to 54, inclusive. Thereafter, the state randomly, and without replacement, draws six numbered balls from a pool of 54 balls (numbered from 1 to 54). Other states, and often other games within a state, employ slightly different schemes. For example, in Massachusetts, the MASS MILLIONS game chooses six balls from a field of 49. MASS CASH, on the other hand, chooses 5 balls from a field of 35, and so forth. Players are generally rewarded for obtaining 3 or more matches. Casino and state-run keno, however, are typically games of chance.

Some keno games allow players to choose patterns of numbers on their tickets. Higher payoffs are made when such patterns are hit. However, players do not develop strategies because the pattern is chosen by the house at random after the player has made a selection.

A need exists to provide new games with the familiar keno matrix format incorporating a new type of game contained therein, such as that found in popular home games. One popular home game involving a matrix of numbered positions is the game of BATTLESHIP trademarked by Hasbro, Inc. In the BATTLESHIP game, each player has a target grid and an ocean grid. To play the game each player secretly places a fleet of five ships on their respective ocean grid. Once the ships are placed, they cannot be changed. Players take shots by calling out a letter and a number to identify a location on the target grid. As a shot is made, the other player informs the shooter whether a boat on his ocean grid has been hit or not. When a hit occurs, the shooter places a red peg in the identified location of the target grid for a hit and a white peg for a miss. The first player to sink all five of the opponent's ships becomes the winner. In the play of this game, each ship occupies a certain number of locations of the grid. For example, a battleship occupies four locations whereas as a submarine has three locations, etc. Essentially, the players use their skill to identify the ship and the location of the ship on the target grid to sink the other's fleet.

A continuing need also exists for new casino wagering games and for variations and modifications thereto, and in particular to games that will keep the player's attention by allowing the player to develop a strategy.

SUMMARY OF THE INVENTION

1. Solution to the Problem. The present invention is different from conventional keno or lotto games in that the player of the present invention may employ a unique strategy to solve an underlying puzzle thereby meeting the aforesaid needs. Even an incorrect guess by the player eliminates possible choices. Thus the player is able to continue developing a strategy for uncovering a hidden pattern or patterns in a modified Keno game. When utilized as a bonus game, a player tends to play underlying games longer, because with each play the player draws closer to solving the puzzle in the bonus game. Another advantage of the present invention, whether utilized as a stand-alone game or as a bonus game, is the potential for larger jackpots for a player who uncovers the pattern in a minimal number of guesses or who uncovers larger, more complex, or even multiple patterns.

2. Summary. The present invention sets forth a method for playing a keno-type casino game. A virtual matrix comprised of a plurality of grid elements is provided, on which a pattern hidden from the player is randomly placed. The hidden pattern is comprised of a plurality of matrix entries. The player is unable to view or have knowledge of the virtual matrix. However, the player is able to view a gaming matrix which has a plurality of grid elements. Each visible position corresponds to one of the grid elements on the virtual matrix. In response to either the player submitting a wager, or winning a play as part of a bonus condition occurring in an underlying game, the player chooses at least one of the plurality of visible positions on the gaming matrix. The game of the present invention then displays, on the gaming matrix, the contents of the corresponding grid element of the virtual matrix. The game can either accept another choice from the player, or allow the player to guess the remaining visible positions where the player believes the hidden pattern is positioned. If the player guesses correctly and uncovers the hidden pattern, the player is awarded and a media presentation signals the player's success. If the player guesses incorrectly, a second media presentation signals the incorrect guess.

In some embodiments of the method of the present invention, the player receives payoff multiples that are higher when the pattern is identified with a minimal number of misses.

In some embodiments of the method of the present invention, a number of hidden patterns are provided and the player receives a payoff for solving each separate hidden pattern.

Finally, a number of other embodiments, variations, and versions of the method of the present invention are set forth.

BRIEF DESCRIPTION OF THE DRAWINGS

FIG. **1** is a block diagram illustrating the components of the present invention.

FIG. **2** shows a virtual matrix of a first embodiment of the method of the present invention.

FIG. **3** shows a virtual matrix of a second embodiment of the method of the present invention.

FIG. **4** shows a video gaming matrix corresponding to the virtual matrix of FIG. **3**.

FIG. **5** shows the video gaming matrix of FIG. **4** illustrating the player's guesses.

FIG. **6** is a process diagram, depicting the steps of one preferred mode of operation for method of the present invention.

FIGS. **7**(*a*), **7**(*b*), **7**(*c*), and **7**(*d*) represent a variation of the method of the present invention based upon a prior art Keno game.

FIGS. **8**(*a*), **8**(*b*), **8**(*c*), and **8**(*d*) represent a variation of the method of the present invention used as a bonusing game to an underlying game.

DETAILED DESCRIPTION OF THE INVENTION

1. Overview. The present invention provides a method for reversing and expanding the traditional play of keno by introducing novel hidden patterns into the game. FIG. **1** generally outlines one preferred embodiment for the system **10** of the present invention. The system **10** includes central processing unit (CPU) **20**, media display **50**, an activation signal received over line **25**, a payout signal received over line **40**, random number generator (RNG) **60**, video screen **100**, a memory **200** and, optionally, a solve indicator **30**.

The CPU **20** of the present invention receives an activation signal over line **25** indicating that either a wager has been placed, or a bonus game condition has occurred in an underlying game, or any other condition signaling play to commence. Media display **50** may be used to entice players to play the game **10**, or to let the player know the game **10** is about to start. The media display may be audio, digital, graphic, and/or a combination thereof and may have different presentations stored in memory **200** for different stages of game play. The media display **50** could also be incorporated into display **100**. The media display **50** could also be a separate computer-based media system.

The CPU **20** next generates or uses a virtual matrix **210**, which is stored in memory **200** (or the internal memory of the CPU **20**). The preferred embodiment uses a two-dimensional virtual matrix **210** having X and Y-axises as shown and, therefore, the following will be described with respect to a two-dimensional matrix. However, the game of the present invention is not limited to a two-dimensional matrix and a one-dimensional or multi-dimensional matrix could also be used. The virtual matrix **210** is comprised of a plurality of grid elements **220**, and is kept hidden from the player of the present invention (i.e., in computer memory **200**). The player is able, however, to view the gaming matrix **110** on video screen **100**. The gaming matrix **110** is comprised of a plurality of visible positions **120**, each visible position **120** corresponding to one of the grid elements **220** of the virtual matrix **210** in the X and Y-axis.

A representation of the hidden pattern **70** is displayed on the screen **100** in area **130** so that the player knows the shape of the pattern **70** and the number of matrix elements **75** of the pattern **70**. In some methods of the present invention, this display **130** may be a display separate from screen **100** or simply a printed diagram.

The present invention uses a random number generator **60** (or suitable software) to randomly place the hidden pattern **70**, comprised of one or more matrix entries **75**, onto the virtual matrix **210**. This occurs in response to the first signal on line **25** indicating start of the game **10**. In FIG. **1**, the hidden pattern **70** is a rectangular bar composed of three matrix elements **75**. In practice, the hidden pattern **70** can be quite robust, and it thus provides for considerable variety in play. Each matrix entry **75** can also be a shape (i.e., the clover shown in FIG. **1**) or letters of the alphabet, which when combined to create the hidden pattern **70**, form a compound image or a word. Alternatively, each hidden pattern **70** or matrix entry **75** together can represent an establishment logo or other icon. Or, the pattern **70** may be a geometric shape (e.g., a cross composed of shaded areas **75**). The matrix entries **75** and the pattern **70** can be any of innumerable colors, shapes, designs, etc., and the method of the present invention is not limited by a particular pattern **70** or matrix entry **75**. Furthermore, more than one pattern **70** can be used and each different pattern **70** can have different matrix entries **75**.

After the hidden pattern **70** has been randomly placed by the CPU **20** in the virtual matrix **210**, the player is given a number of "guesses" or "shots" (e.g., six guesses or 10 misses, etc.) with which to uncover the hidden pattern **70** by selecting visible positions **120** (such as by touching) on the video screen **100**. This player input is received over line **80** by the CPU **20**. CPU **20** then retrieves the content of corresponding grid element **220** of the virtual matrix **210** and displays it in the selected and corresponding visible position **120** on the gaming matrix **110** at the same x, y location. If the corresponding grid element **220** contains a matrix entry **75** of the hidden pattern **70**, that matrix entry **75** is displayed in the selected visible position on the gaming matrix **110** (i.e., a "hit" is indicated). Likewise, when the corresponding grid element **220** does not contain a matrix entry **75** of the hidden pattern **70**, an empty indicator **225** (e.g., the words "empty," an "O," other indication) may be displayed in the selected visible position **120** of the gaming matrix **110** (i.e., a "miss" is indicated). In some embodiments of the method of the present invention, a "miss" may not be indicated, thereby leaving it to the player to remember not to touch that visible element again. A message or other indication may also be displayed with media display **50**, corresponding to whether a matrix entry **75** of the hidden pattern **70** was uncovered, or whether the entire hidden pattern **70** has been uncovered. This process continues with each guess until the player runs out of a given number of guesses (or misses) or the hidden pattern **70** is uncovered. The media display **50** may also be used to indicate the player has run out of guesses and must start over.

In one embodiment of the method of the present invention, the player may choose to solve the puzzle (e.g., to touch the remaining locations of the hidden pattern **70** on video screen **100**) at any time during play of the game, or by activating the optional solve device **30**. If the optional solve device **30** is included, after receiving a signal from solve device **30** over line **85**, the CPU **20** accepts signals over line **80** from the gaming matrix for each visible position **120** indicated by the player until either an indicated visible position **120** does not match a matrix entry **75** of the hidden pattern **70** (i.e., a miss), or the player correctly identifies each remaining visible position **120** corresponding to each matrix entry **75** of hidden pattern **70**, at which time the game is ended. A separate solve feature need not be included in the present invention, however, and the player could simply choose the grid elements (i.e., the visible portions **120**) corresponding to the known location of the hidden pattern **70**. In such an embodiment, the paytable would simply be adjusted according to the total number of guesses.

In one embodiment of the method of the present invention, a single match to an element of the hidden pattern **70** is sufficient to reveal the entire pattern **70**. In this fashion, the game can be faster, but the element of strategy still remains. Also in this embodiment, multiple hidden patterns **70** may be employed to create a compound pattern. In this case, a single hit to any one matrix element **75** in each hidden pattern may be required, or simply one hit to any one matrix element **75** in any one pattern may reveal the entire compound pattern. For example, if two patterns each consisting of 3 matrix elements are hidden, then the game may

be played in one of three ways: 6 hits may be required to completely uncover the two hidden patterns (each hit uncovers only one matrix element), 2 hits may be required to completely uncover the two hidden patterns (each hit uncovers the corresponding hidden pattern), or 1 hit may be required to completely uncover two hidden patterns (the 1 hit on any one of the two patterns uncovers both hidden patterns). The term hidden pattern used herein includes not only one hidden pattern, but a number of hidden patterns sometimes referred to as a compound hidden pattern. The hidden pattern can be formed of non-adjacent matrix entries, adjacent matrix entries, groups of adjacent matrix entries, etc.

Payoffs are established based either on the number of successful hits (identifications) when the solve area **30** is touched, or the number of matches (i.e., hits) to hidden pattern **70** in light of the total number of guesses. Payoffs can be based on, for example, the number of individual matrix entries **75**, individual hidden patterns **70**, or to multiple hidden patterns **70** that are matched by the player during play of the game. The solve feature will be described in greater detail below. However, if a solve area **30** is not included, the number of incorrect guesses (i.e., misses) may be factored into the payoff table as a design choice so that, for example, a player uncovering hidden pattern **70** immediately with only a few misses would receive a higher award than a player who uncovers hidden pattern **70** only after a large number of misses. How the award is modified based upon misses, hits, guesses, and/or a combination thereof is left to design choice under the teachings contained herein. Payoffs may also be given for each correct hit (regardless of misses), for each successful complete identification of a hidden pattern, and/or for identifying the entire compound hidden pattern. The player may receive any suitable award such as a payoff corresponding to the units of the wager (or wagers), objects such as vehicles, tickets, comps such as free dinners, credits, free games, multiples of awards, or any other benefit for the player.

It is to be expressly understood that the system **10** shown in FIG. **1** represents one block diagram approach of the teachings of the present invention. It is functionally described and any of a number of different components, designs, arrangements, or electronic memory, processors, graphic displays, video displays, and/or random number generators, could be utilized to incorporate the teachings and methods of the present invention contained herein. Many of the details of operating conventional gaming devices such as reel-based slot machines, video-based poker games, coin acceptors, card readers (credit, debit, smart, etc.) are well known and are not important to the teachings of the present invention other than in a functional approach. It is well known how to place bets, recognize the amount bet, and award the winning player based upon a pay table stored in memory **200**. Therefore, the method and teachings of the present invention can be incorporated into a stand-alone casino game such as commonly seen with stand-alone keno, slot, and poker games. Or, the game can be incorporated as a choice of games so that a player coming to the gaming machine can select a game from a menu of games and the present game could be one of the choices. Or, the present invention can be incorporated over a network so that players can play in hotel rooms, at casinos, or over a communication network at their home by playing the game on their home personal computer. In the latter situation, the home or room computer would communicate over the communications network with a centrally located computer which would have memory **200** random number generator **60**, etc. How the method of the present invention is incorporated, whether as a stand-alone game or as a bonus game, can be one of many equivalent designs.

2. Details of Pattern Placement. FIG. **2** illustrates one embodiment for randomly placing a hidden pattern **70***a* on a virtual matrix **210***a* in memory **200** by CPU **20**. Grid elements **220***a* are designated along the X-axis from 1 to 10 and along the Y-axis from 1 to 10. The grid elements **220***a* in FIG. **2** are numbered 1 to 100. The following discussion will refer to specific grid elements **220***a* by their column-row designation (i.e., (x,y)).

In FIG. **2**, a 10×10 virtual matrix **210***a* is shown onto which a rectangular pattern **70***a* (comprised of 1×5 matrix entries **75***a*) is randomly placed. It is to be expressly understood that while a 10×10 matrix is shown, that the virtual matrix **210***a* may be any size or dimension. In addition, while hidden pattern **70***a* is shown as a rectangle placed horizontally on virtual matrix **210***a*, hidden pattern **70***a* may take any form or orientation on the virtual matrix **210***a*. For example, the hidden pattern **70***a* may have uneven dimensions, be separated by grid positions **220***a* that do not contain matrix entries **75***a*, or contain a plurality of individual discontiguous hidden patterns **70***a*. Likewise, as discussed above, the hidden pattern **70***a* may be comprised of any suitable matrix entries **75***a* such as a series of letters or icons. In FIG. **2**, the icon is an "X." In addition, the CPU **20** may randomly generate different hidden patterns **70***a*, or the player may be allowed to select the hidden pattern **70***a* from a plurality of hidden patterns, before the hidden pattern **70***a* is positioned on the virtual matrix **210***a* for each game. In this latter embodiment, more difficult patterns would have higher payoffs.

Of course, in the preferred embodiment of the present invention the player must know in advance of the play what the hidden pattern is. In an alternative version, the player plays to uncover a random pattern with knowledge of a set of possible random patterns from which the hidden pattern **70** was chosen. For example, the hidden pattern **70** itself may be indicated simply as a letter of the alphabet; in this case the player would have to determine which letter was hidden as an additional stratagem. In another alternative version, the player has no knowledge of the hidden pattern **70**. Hence, the hidden pattern **70** can be displayed as shown in FIG. **1**, at location **130** on the monitor **100**, or it can be permanently affixed to the game (when the fixed pattern is always the same). Or, CPU **20** can allow the player to select the hidden pattern **70** from a menu containing a number of hidden patterns, then display the hidden pattern **70** in an area **130** of the screen so that the player can easily refer to it as the player is seeking to uncover the hidden pattern **70** in the gaming matrix **110**.

One technique used by CPU **20** to randomly position hidden pattern **70***a* on virtual matrix **210***a* is to first randomly choose an orientation (horizontal or vertical), and then to randomly choose a grid element **220***a* for the left-(if horizontal) or lower-(if vertical) most matrix entry **75***a* of the pattern **70***a*. In FIG. **2**, the hidden pattern **70***a* starts at grid position **(2,6)** and extends horizontally to grid position **(6,6)**. Using this technique, the lower- or left-most matrix entry **75***a* of hidden pattern **70***a* may be situated anywhere starting in the first six grid positions **220***a* along the X-axis (e.g., **(1,1)**, **(1,2)**, . . . **(1,10)**, **(2,1)**, **(2,2)**, . . . **(6,10)**) if horizontal, or anywhere starting in the lower six grid positions along the Y-axis (e.g., **(1,10)**, **(1,9)**, . . . **(1,6)**, **(2,10)**, **(2,9)**, . . . **(10,6)**) if vertical, so as to fit hidden pattern **70***a* completely within virtual matrix **210***a*. Thus, if each of the possible placements for the lower- or left-most matrix entry

75*a* are weighted equally (6×10×2=120), the present invention has an algorithm for randomly placing the pattern **70***a* in 120 possible positions of the 10×10 virtual matrix **210***a* based upon the random number generator **60**.

Multiple hidden patterns **70***a* may also be randomly placed using this procedure in a sequential fashion, with the additional step of checking that the pattern to be placed does not overlap any prior placed hidden patterns **70***a* on the virtual matrix **210***a*.

Although an explicit method for placing a hidden pattern **70***a* on a virtual matrix **210***a* has been set forth, this method is only intended as an example to illustrate one of many possible algorithms. It is not meant to limit the possible hidden patterns **70***a* or the means by which random placement is achieved. Indeed, the random placement of the pattern(s) may be constructed so as to bias the placement toward a certain region of the virtual matrix, if desired.

3. Details of the Method of Play. FIGS. **3**, **4**, and **5** illustrate one method for playing the game of the present invention. FIG. **3** shows a hidden pattern **70***b* (T-shaped in this illustration) randomly placed on a 5×5 virtual matrix **210***b* by CPU **20** that is used in conjunction with video screen **100***a*, shown in FIGS. **4** and **5**. FIG. **4** shows video screen **100***a* before play begins (i.e., no visible positions **120***a* have been selected by the player) and the shape of the hidden pattern **70***b* shown in area **130**. FIG. **5** shows the video screen **100***a* of FIG. **4** after two visible positions **120***a* have been selected by a player first at **(1, 2)** which is a "O" and second at **(4,3)** which is an "X." The numbering 1 through 25 may or may not be displayed. The X and Y number may or may not be displayed.

Although FIGS. **4** and **5** show a video screen **100***a*, gaming matrix **110***a* may be displayed in any convenient manner, such as mechanically displayed, and need not have visible positions at each coordinate of gaming matrix **110***a*. It is only important that each visible position **120***a* correspond to a grid element **220***b* of virtual matrix **210***b*.

In FIG. **3**, the hidden pattern **70***b* before, at, or after (i.e., contemporaneously with) the start of the game is randomly placed on virtual matrix **210***b* by CPU **20**, such that each grid element **220***b* is comprised of an "O" (indicating there are no matrix entries **75***b* of the hidden pattern **70***b* at that grid element **220***b*) or a matrix entry **75***b* (e.g., an "X" to indicate a portion of the hidden pattern **70***b* is evident at that grid element **220***b*). An executable computer software program contained in CPU **20** brokers the game according to the following description.

In FIG. **4**, the video screen **100***a* displays a two-dimensional gaming matrix **110***a* in which each of the visible positions **120***a* are enumerated (i.e., with keno-style numbering, individual labels, matrix locations, borders or patterns). Touch screen areas form the visible positions **120***a* and provide players with the ability to indicate their selection. Or, a separate keyboard or any other suitable input device such as a mouse-activated pointer, not shown, could be used. The player initiates the game by wagering a prescribed number of units. In a preferred method of play, money, gaming chips, credit, or their equivalent may be wagered. Alternatively, the game is initiated as a bonus game to an underlying game (i.e., a slot machine game or a table game). If initiated as a bonus game, it may be initiated once and played to completion, or it may be "visited" as many times as required to complete the pattern. In this case, each "visit" may comprise one guess, one miss (hence, possibly several guesses provided the player is selecting well), and so forth.

Once the game is initiated such as by a signal (i.e., wager for a stand-alone or bonus condition for a bonus game) on line **25**, the player is given a predetermined number of guesses with which to completely identify all grid elements **220***b* corresponding to the matrix entries **75***b* of the hidden pattern **70***b*, indicating in the preferred embodiment, their selection by touching visible positions **120***a* on gaming matrix **110***a*. With each guess, the corresponding grid element **220***b* in virtual matrix **210***b* is displayed on gaming matrix **110***a*. For example, if the player chooses the visible position **120***a* at coordinates **(1,2)** on gaming matrix **110***a* (FIG. **4**), the empty indicator **225***b* of grid element **220***b* at coordinates **(1,2)** on the virtual matrix **210***b* (FIG. **3**) is displayed on gaming matrix **110***a*, shown as an "O" in FIG. **5**. If the player next selects visible position **120***a* at coordinates **(4,3)** on gaming matrix **110***a* (FIG. **4**), the content of grid element **220***b* at coordinates **(4,3)** on the virtual matrix **210***b* (FIG. **3**) is displayed on gaming matrix **110***a* (in this example, matrix entry **75***b*), shown as an "X" in FIG. **5**. In one embodiment including solve area **30***a*, at anytime during guessing, the player can touch the solve area **30***a* and attempt to identify the remaining portions of the hidden puzzle. The earlier the player solves the puzzle during the guesses. The higher the payoff. In a second embodiment not including solve area **30***a*, the player who discovers the location of hidden pattern **70***b* would simply uncover the remainder of hidden pattern **70***b* without any further incorrect guesses, and thus be rewarded with a higher payoff than the player who does not discover the location of hidden pattern **70***b* and instead makes both correct and incorrect guesses before uncovering hidden pattern **70***b*. In either case, should the player be successful in identifying the coordinates of the entire hidden pattern **70***b*, the game is over and the player is paid a predetermined number of units. Should the player run out of guesses and only be partially successful, the game is over and the player is paid a prescribed number of units according to the number of chosen visible positions **120***a* matching grid elements **220***b* containing a matrix entry **75***b*. Should the player run out of guesses and be unsuccessful in identifying any of the hidden pattern **70***b*, the wager is lost.

The present invention is not to be limited by the method of awarding the player. For instance, the player may be paid immediately for each correctly chosen visible position **120** (i.e, hit), or the award may be based on the number of incorrectly chosen visible positions **120** (i.e., misses), the complexity of the hidden pattern **70**, the number of guesses taken, or the number of guesses allowed but not used. In addition, the player may be able to continue play of the game by wagering additional units. Indeed, a wide-area-progressive network may be tied to the method of the present invention. Every time the game of the present invention is played, a fraction of the wager is separated and added to the progressive meter (or, a separate progressive wager may be played). At such time as the predetermined sequence of events occurs (i.e., the pattern is uncovered with no misses) the winning player is awarded the progressive amount or a fraction thereof, based on the number of winning players.

The game of the present invention is robust in that it can accommodate varying methods of play. The player can be given a fixed number of guesses, with which to uncover as much of the underlying pattern **220** as possible. Alternatively, the player may be afforded a fixed number of misses, whereby after said number of misses the game is over. Or the player may be given an initial number of guesses, which increment by a predetermined amount based on successful hits. In addition, the player may be given the

option to guess the position of hidden pattern **70** at any time during play of the game (i.e., by activating solve device **30** shown in FIG. **1**). Other embodiments may include giving the player a predetermined number of guesses, which may be increased by correctly guessing the position of a matrix entry **75**, or the player may only be permitted a predetermined number of incorrect guesses. Additionally, the player may be able to take multiple guesses before learning the results of those guesses, or the guess may encompass, for example, a 2×2 array. A successful guess may also be rewarded with another "free" guess.

It is to be expressly understood that more complex and/or compound patterns **70** will lead to more variety in game play. For example, rectangles of dimension 1×5, 1×4, 1×3, 1×3, and 1×2 (i.e., based upon the conventional BATTLESHIP game patterns) could all be situated on the matrix at once. In addition, a multimedia presentation **50** may accompany each successful or unsuccessful match.

The game may also be utilized as a bonus in conjunction with an underlying game(s) (i.e., a slot machine(s)). In the case where the underlying game is a slot machine, the player is rewarded with a guess on the game of the present invention when a predetermined symbol, or combination of symbols appear on the payline of the slot or any bonus condition signal is received from the underlying game. A large number of different bonus condition such as signals, events, triggers, etc. are known in the gaming industry to effectuate bonus play in a bonus game from an underlying game such as a table game, gaming machine, etc. Hence, whenever the symbol to play the bonus game occurs (which is random in the play of the slot machine), the player is able to make one more guess. This continues until the player completes the puzzle. The use of the solve area (or button) **30** is optional.

It is an advantage of this invention that the bonus game may run "in parallel" with the underlying game. Generally, several guesses will be required to uncover the hidden pattern **70**. Hence, a player who has partially uncovered the hidden pattern will be more inclined to continue play on the underlying machine in order to revisit the bonus game and finish the pattern. Too, even incorrect guesses are informational strategically, and so a player who is "unlucky" in uncovering the hidden pattern **70** is also encouraged to continue play by virtue of eliminating possible matrix positions **220** where the hidden pattern **70** may be hidden.

4. Details of the Strategy. Generally, the player will want to uncover the entire hidden pattern **70***a* (FIG. **2**) with a minimum number of guesses to gain the highest payoff. An advantage of the present invention is that players may develop a strategy for playing the game of the present invention because the player plays a key part in determining the proper grid elements **220***a* to choose. In particular, consider the 10×10 virtual matrix **210***a* and the randomly placed hidden pattern **70***a* shown in FIG. **2** and whose random placement is described earlier. A strategy in which a player chooses a visible position **220***a* located at a corner (e.g., coordinates **(1,1)**), and thereafter, with each miss, chooses an adjacent element (e.g., at coordinates **(1,2)**, **(1,3)** and so on), is inferior, as generally in excess of 50 guesses will be required to discover the hidden pattern **70***a*.

A player of the present invention may do substantially better by utilizing the following algorithm, given only as an example using FIG. **2**. At each point in the game, the player calculates for each grid element **220***a*, the number of possible positions that a portion of the hidden pattern **70***a* may have at that location. For example, at each corner **(1,1)**, **(1,10)**, **(10,1)**, and **(10,10)**, there are only two possibilities that the hidden pattern **75***a* is positioned there. On the other hand, in each of the center locations of **(5,5)**; **(5,6)**; **(6,5)**; and **(6,6)** of virtual matrix **210***a*, there are ten possible positions of the bar **75***a*. This strategy thus comprises, for each guess: performing the above calculation, finding the set of grid elements **220***a* with the greatest number of possible positions, and randomly choosing from among this set. The process continues until the entire hidden pattern **70***a* is revealed. An identical process can be employed for a compound hidden pattern (comprising more than one hidden pattern), by cycling through all hidden patterns in the compound pattern that correspond to a each matrix position.

5. Details of the Bonus Game. The mechanism of utilizing a bonus game is well known. Typically, the pay table on the underlying game is modified somewhat, to allow the bonus game to be played. For example, if an underlying slot machine typically paid 5 coins on 20% of the plays, the pay table may be modified to dispense only 4 coins in these situations, so as to "gain" 0.2 coins per play. Thereafter, if a bonus game occurs every, 100 plays, for example, it literally "costs" twenty coins to participate (0.2×100=20). The connection between stand-alone and bonus versions of the present invention is thus self-evident. As a bonus game in the aforesaid example, the underlying game can dispense an average of twenty coins, maintaining an identical house advantage on the underlying game in addition to the bonus game combination. The bonus game may dispense on average less than twenty coins to increase the house edge. Alternatively, new underlying games may be designed with the bonus game in mind.

Clearly, this same type of bonus game "kick-off mechanism" can be used with the teachings of the present invention. Assuming a player develops the strategy discussed above, the player will uncover the entire hidden pattern **70***a* (FIG. **2**) within thirty guesses on almost every instance of the bonus game. Therefore, the house may award the player with thirty guesses in the bonus game in an effort to uncover the entire hidden pattern **70***a*, awarding twenty coins if the hidden pattern **70***a* is indeed uncovered. Alternately, based on the probabilities of finding the hidden pattern **70***a* as a function of the number of guesses, the paytable may be structured with an average payoff of only fifteen coins. An advantage of this approach is that inferior play (play not utilizing a strategy such as the strategy set forth above), whether as a bonus or stand-alone game, adds to the house advantage.

In an alternative embodiment, the underlying game periodically provides means for a guess at the bonus game of the present invention. This is a distinct advantage as typically in bonus games, the entire bonus game is completed in each instance. By tying the underlying game and bonus games together, the player will periodically (randomly in the preferred embodiment) visit the bonus game, thus ensuring suspense and positive feedback through progress within the bonus game. The player is thus encouraged to play the underlying game longer, so as to see the resolution of the bonus game. In such a game, thirty guesses may be too many and so the bonus game may use less guesses. The following sets forth an example.

EXAMPLE

As a preferred embodiment of the method of the present invention and as shown in FIG. **8**, consider an underlying slot machine with the present invention utilized as a bonus game. The exact nature of the underlying game is not

material, but for purposes of this example, the underlying gaming machine is a conventional slot machine that allows players to wager on five individual paylines. Each payline has an equal chance, 1 in 50, of generating a bonus condition (i.e., on line **25** of FIG. **1**) as a result of a symbol combination (or a symbol) which results in a visit to the bonus game of the present invention. Each visit gives the player one guess at the 7×7 game matrix **800**.

The virtual matrix is also 7×7, and has the following five hidden patterns (shown by dotted lines in FIG. **8**) randomly placed thereon: 1×2 (**810**), 1×3 (**812**), 1×3 (**814**), 1×4 (**816**), 1×5 (**818**) (which corresponds to patterns, for example ships, in the BATTLESHIP game). The random method of placement comprises randomly placing the largest hidden pattern (according to the placement algorithm specified above), followed by the next largest, and so forth until all hidden patterns are randomly placed in the virtual matrix.

The method of playing the bonus game in this example follows. Assuming a wager of 1 credit per payline, upon visiting the bonus game, the player is awarded a prize of 5 credits (5×the line wager on the payline that provided the bonus combination) just as a conventional payoff in the underlying game causes a credit meter to increment. Thereafter, the player is allowed to guess at one of the 49 matrix elements in the game matrix **800**. Should the "guess" result in a "hit" the player is awarded an additional prize of 10 credits (10×line wager) which would also cause the underlying game credit meter to increment by this amount (e.g., signals over line **40** of FIG. **1**). Finally, an amount equal to 20 credits (20×line wager) is added to an "escrow award," and the hidden pattern which was "hit" is fully exposed (i.e., a single correct guess exposes the associated hidden pattern). Should the "guess" result in a "miss" the player is not awarded an additional prize. The underlying gaming machine then resumes play.

Upon correctly uncovering the entire compound hidden pattern (consisting of five individual hidden patterns), the player is awarded the cumulative "escrow award" multiplied by a bonus factor, as appears below:

TABLE I

Number of Misses	Multiple
0 misses	50×
1 miss	10×
2 misses	5×
3 misses	4×
4 misses	3×
5 misses	2×
6+ misses	1×

By employing the "smart" strategy given earlier, the average number of guesses required to uncover the entire pattern is 13.9. Hence, on average 13.9×50=695 line plays are necessary to complete the bonus game.

In addition, the chance of finishing the game with 0, 1, 2, 3, 4, and 5 misses is approximately 1 in 437, 112, 47, 25, 17, and 12, respectively. Hence, the average accrued escrow is approximately 161 credits (for a constant one-credit line wager each visit to the bonus game). When the escrow is combined with the 13.9×5=70 credits associated with visiting the bonus and the 5×10=50 credits associated with immediate award for uncovering a hidden pattern, the total value for the bonus game over time is approximately 161+70+50=281 credits.

The 281 credits in 695 line plays result in the bonus being an expected return of 281/695=40%. When coupled with a base game otherwise returning 50%, the entire base game+bonus game total return is 90%, leading to a 10% house advantage for the product.

FIG. **8** illustrates the method of this embodiment in more detail. Assume a player in playing the underlying machine receives a bonus condition providing the player with an opportunity to play the bonus game for the first time. The screen **800** showing the matrix elements **1** through **49** is displayed. The matrix elements **1** through **49** can each bear a number as shown in FIG. **8**(*a*) or, as in the game of BATTLESHIP, have the columns numbered and the rows labeled with a letter of the alphabet. Any suitable identification design could be used under the teachings of the present invention. Indeed, no identification could appear in some embodiments of the present invention. Assume in this illustration that the matrix **800** is a touch screen and that it is presented to the player entering the bonus game for the first time, completely blank, as the hidden patterns **810**, **812**, **814**, **816**, and **818** (shown in dotted lines) are unknown to the player except to the extent that the player knows this set of hidden patterns have been randomly placed in the virtual matrix. The shape of the hidden patterns as well as the number of matrix entries for each hidden pattern may also be shown at area **130** so that the player understands what is to be uncovered. As illustrate in FIG. **8**, the hidden patterns are generically shown as elongated ovals, but it is to be expressly understood that the actual hidden patterns can be any graphic, design, etc. as previously discussed. In adapting the conventional BATTLESHIP game to the game of the present invention, the shapes can be pictures of ships. However, any suitable graphics could be used such as animals (e.g., uncovering animals hidden in a jungle, celebrities, etc.

The player touches matrix element "**10**" and scores a "hit". As shown in FIG. **8**(*b*) elements **9**, **10**, **11**, **12**, and **13** become activated **822** to show pattern **818**. Also displayed to the player is a suitable display **820** which escrows the payoff value **20** for scoring a "hit" (which as shown in FIG. **8**(*a*) is set to **20**). Also a display **830** is provided which displays the current status of the player's misses and the multiple value presently in place. At the start of the bonus game in FIG. **8**(*a*) the player has zero misses and the multiple is 50X which shown in display **830**. It is to be understood that displays **820** and **830** could be located in any suitable location or orientation on a gaming machine and that the method is not limited thereby. Furthermore, these displays are conventionally connected to a controller or CPU **20** such as that shown in FIG. **1**.

At this point, the player has received five credits in the underlying game for entering the bonus game, ten credits entered into the meter of the underlying gaming machine for correctly hitting a hidden pattern, and twenty credits in escrow as shown in display **820**. Under the method of the present invention, variations on this could occur. For example, an initial payoff for entering the bonus game need not be made or could become a part of the escrow value shown in display **820**. Likewise, a payoff credit for hitting a pattern need not be paid in the underlying gaming machine credit meter, and a wide variety of combinations of payoffs back to the player can be designed under the teachings of the present method. For example, in one version the player simply receives credits for hitting and causing the pattern to be fully exposed.

With the first "guess" in this example over, play now returns to the underlying game. Subsequently, the player receives the proper bonus condition from the underlying game to once again play the bonus game and this time the

player touches matrix element **41** which is activated **824**, but is a "miss" (FIG. **8***c*). The payoff display **820** still shows 20 credits. The display **830** now displays "misses" equal to one and a drop in the multiple according to Table I to 10X.

The bonus game continues in this fashion until, as shown in FIG. **8**(*d*), the bonus game is over. The bonus game has been played in parallel with the play of the underlying game as discussed above. As shown in FIG. **8**(*d*), the player encountered a total of five "misses" at matrix elements **15**, **17**, **27**, **41**, and **44** causing the multiple to be displayed as 2X in display **830** according to Table I. In order to complete the hidden patterns, the player entered the bonus game ten times (five "hits" plus five "misses"). In this example, twenty credits for each uncovered pattern was added to payoff display or meter **820** so that at the end of the bonus game, 100 credits are shown. At the end of the game, the player receives the multiple times the payoff so the player actually receives 200 credits (i.e., 100×2).

The purpose of providing the multiple in display **830** is to encourage players to more skillfully play the game which adds to excitement in the play thereof and provides greater payoffs. It is to be expressly understood that this example is only one embodiment of the method of the present invention and that in other variations, the use of a multiple based upon "misses" may not be present. Indeed, the method of the present invention can be played simply providing payoff values displayed in display **820**.

As mentioned before, a desirable feature of this embodiment is that inferior play will lead to a larger house advantage because more guesses, hence more spins on the base game, will be generally needed before receiving the bonus.

The preceding example is merely illustrative and is not meant to limit the teachings of this invention. Alternately, the player may be awarded varying amounts of rewards, and the rules for guessing may be modified to allow multiple guesses, guess until you miss, accumulation of guesses from the underlying game, accumulation of misses from the underlying game, etc. Too, free guesses may be given upon a correct guess, etc.

Generally, the bonus game may be invoked each time a predetermined event occurs, or may be played in parallel with the underlying game in a continuous-type manner. The underlying game may or may not provide a means to establish the number of guesses or misses in the bonus game. The underlying game may only provide the bonus condition to visit the bonus game (i.e., the occurrence of a predetermined event during the underlying game, a function of the wager on the underlying game, or fixed to occur within a known period of play on the underlying game such as every ten games played or every five games lost). Alternatively, the mechanism to participate in or visit the bonus may be random. In addition, the underlying game may provide means to collect guesses for the bonus game (e.g., a combination of symbols on an underlying slot machine) and may allow for more than one guess to be accumulated or taken at once.

6. Operation. FIG. **6** shows the steps of one embodiment for playing the present invention implemented into the system of FIG. **1**. The game is started in step **600** upon receiving a signal such as a wager or signal over line **25** from an underlying game that a bonus round is to be played. An i×j virtual matrix **210** in memory **200** is cleared by CPU **20** in step **610**. For example, referring to FIG. **4**, each grid element may be represented by its row (i) and column (j) or an associated number (k). For purposes of this representation, $k=f(i,j)=5\times(i-1)+j$. Next, a hidden pattern **70**, made up of a plurality of matrix entries **75**, is chosen by CPU **20** in step **620** from memory. The hidden pattern(s) **70** can always be the same shape(s) from game-to-game or memory **200** may contain a number of patterns that could be randomly selected by the CPU **20** (and random number generator **60**), or which could be selected by the player from a menu. In this later case, and not shown in FIG. **6**, the CPU **20** in stage **600** would first display patterns in display **100** for selection by the player. Once a pattern **70** is selected (whether the same for each game, randomly selected or player selected), the computer randomly places the pattern **200** in the virtual matrix **210** in stage **620**.

The player then selects a visible position **120** from the displayed gaming matrix **110** (e.g., at coordinates (**2**,**3**)) in step **630**. This is received as an input over lines **80** by the CPU **20**. The CPU **20** retrieves the contents for the corresponding position **220** in the virtual memory **200** and displays it in the gaming matrix **110** at the touched visible position as either a "hit" or a "miss."

Stage **650** represents an optional step. In stage **650**, the player is given the opportunity to press solve button **30** when a hit occurs in order to solve the pattern by pressing the remaining physical positions **120** of the pattern. Hence, if the player presses solve area **30** (or activate any suitable activation device), in stage **650** the CPU **20** detects the signal over line **85** and causes the operation to enter stage **630***a* to receive the player additional inputs. In the absence of a solve area **30**, the present invention would simply continue to step **660** and steps **630***a* and **640***a* would be eliminated. If the player successfully completes a pattern in stages **630***a* and **640***b* by touching the remaining positions, then a match has occurred in stage **670**. Stage **680** is entered and the player is awarded a suitable award from the pay table which is stored in memory **200** by the CPU **20**. If the player is wrong and no match occurs in stage **670**, the game is over in stage **690**.

The player continues in the normal play of the game (i.e., without pressing solve area **30**) in stage **660**. This continues for a requisite number of guesses. Hence, if the player has six guesses, the loop through steps **630** to **660** continues until a counter (not shown) equals six and in stage **660** exits to stage **670**. Any suitable number of guesses (in addition to six) may be used to generate a play over signal for a condition to end the game. What has been described is measuring the play over based upon the number of (guesses). It is to be expressly understood that a set certain number of "misses" could be utilized to generate this signal or any other suitable parameter in the play of the game. In addition, a player may activate a solve area **30**, described in more detail below.

If the player is successful in completing the hidden pattern, the player is awarded in stage **680**. Because the player knows the shape of hidden pattern **70** (since it is displayed **130**) or alternatively knows the set of possible shapes from which the hidden pattern was chosen, the present invention is unlike traditional keno, in which the knowledge of one selected number yields no additional information with regard to remaining hidden numbers. The game continues through steps **630** to **660** until the player either completely uncovers hidden pattern **70** or is afforded no more guesses, in which case the game moves to step **670**. In step **670**, the initial wager and/or the uncovered number of matrix entries **75** are evaluated in order to determine an appropriate payoff in step **680**, and then the game ends in step **690**. If there are not sufficient matches, the game proceeds to end with step **690**.

While the operation shown in FIG. **6** and discussed above is a preferred embodiment, it is to be expressly understood

that it represents only one approach to implementing the game of the present invention. This speeds up play of the game. Other equivalent changes to the operation of the present invention can be made.

In summary the method of the present invention allows a player to play a casino game having the following steps: providing a virtual matrix having a plurality of grid elements; randomly associating a hidden pattern on the virtual matrix, the hidden pattern having a plurality of matrix entries, each of the plurality of matrix entries assigned to one of the grid elements; providing a gaming matrix having a plurality of visible portions, each of the plurality of visible portions corresponding to one of the plurality of grid elements; receiving an input signal from the player, the input signal identifying one of the plurality of visible portions on the gaming matrix; determining the input signal to be a hit when the identified visible portion corresponds to a grid element having a matrix entry and to be a miss otherwise; playing on the gaming matrix the matrix entry when the matrix entry is assigned to the corresponding grid element of the virtual matrix in response to receiving the input signal from the player and awarding the player based on the hits and misses. Under this general method, a number of variations can occur. For example, in the step of awarding the player, the step of awarding, in one version, may be based only upon the occurrence of a hit by the player. In other variations, the award to the player may be based solely on misses or a combination of hits and misses. Indeed, an award may only be made when the complete hidden pattern is fully identified based upon the input signals from the player. In addition, the award value awarded to the player can be modified, under the teachings of the present invention, based upon the determination of the input signal from the player to be a miss. In which case, the award value for a given number of misses is greater than or equal to an award value for the given number plus one number of misses. In a typical embodiment under this version, the award value would decrease with each new miss. This would provide incentive to the player to avoid misses in the play of the game. To do so would result in a greater award value. Furthermore, wagering may occur at the beginning of the casino game and/or wagering may occur at various stages within the casino game of the present invention. Of course a hidden pattern can be a permanent hidden pattern for the game, the selection of the hidden pattern to be solved from a plurality of hidden patterns (the choice being made by the player), or the hidden pattern being chosen by the game from a plurality of hidden patterns.

7. Optional Solve Feature. Optionally, a solve feature may be included in step **650**. If the player does not wish to solve the puzzle for the hidden pattern, the player continues play of the game by not pressing the solve area **30** and simply continues to guess (e.g., steps **630** through **660**) as described above. However, if the solve area **30** is included in the present invention, the player at any point after an inputted result is displayed in stage **640** has the option of solving the puzzle by pressing area **30** on display **100** and then pressing the visible positions **120** under which the remaining entry **75** of the hidden pattern **70** exists. The results are displayed in stage **640***a*. When the requisite number of additional matrix entries of the pattern **70** have been uncovered in stage **630***a* and displayed in stage **640***b*, the player is done and stage **670** is entered to determine whether a match has occurred. It is to be expressly understood that, under this embodiment, when a player is given a number of guesses and when the player presses the solve area **30** early in the guessing game, the player receives a higher payoff. For example, assume a player has six guesses to solve the pattern **70**. If, after the first guess, the result is displayed in stage **640**, the player activates the solve button **30** and successfully completes the hidden pattern **70**, the player receives the highest payoff. However, should the player wait and push the solve area **30** after five prior guesses, then the player receives a much lower payoff if the player is successful in uncovering the entire hidden pattern **70**.

Alternatively, rather than waiting for the player to enter all remaining entries after pushing the solve area **30** to make the match in stage **670**, the matching could occur with each entry by the player so that when the player misses, the game is immediately over.

8. Keno Modification Alternate Embodiment. In FIG. **7**, the conventional game of keno is modified according to the hidden pattern teachings of the present invention as a bonus game. Assume a keno matrix shown in FIG. **7**(*a*) is used. This matrix **110***c* has forty-nine visible positions **120***c* which are labeled **1-49**. In a conventional fashion, the player may play this game such as at a stand-alone keno video game by touching visible positions **120***c* in which to play the keno underlying game. For example, and as shown in FIG. **7**(*a*), the encircled numbers **9**, **19**, **23**, **32**, **35**, and **43** are the six numbers selected by the player to play the conventional game of keno. It is to be expressly understood that the matrix **110***c* can be of any size with any set of numbers in corresponding visible positions **120***c*. Furthermore, any number of visible positions **120***c*) can be selected by the player to play the keno game. Hence, the player places a wager in the machine and then selects, in this example, the six numbers encircled in FIG. **7**(*a*).

The CPU **20** in a conventional fashion and in conjunction with a random number generator **60** (or random number generating software) selects six numbers, and those six numbers are then displayed as shown in FIG. **7**(*b*) with the numbers within a rectangle. In FIG. **7**(*b*) and in our example, **3**, **6**, **23**, **32**, **35**, and **46** were randomly selected as the outcome of the conventional keno game. The player in the underlying keno game has three matches. The numbers **23**, **32**, and **35** are each encircled (player selected) and placed within a square (computer randomly selected). Hence, the player receives a payoff for three correct matches from a Keno pay table which may exist in memory **200**. This is conventional play of the underlying Keno game. It is to be understood that the encircling and the placing of numbers and rectangles is simply used as an illustration and that other display devices can easily convey this information to players.

At this point, the pattern feature of the game can be played as a bonus game according to the method of the present invention. This can be automatic so that at the end of every keno game, the player is given the opportunity to complete the pattern as a bonus game. Or, the player may be required to wager the winnings of the keno game, to place a separate wager, or push a separate button, or otherwise activate the bonus game over lines **25**.

When this occurs, at least four alternate embodiments exist. The first embodiment in FIG. **7**(*c*) simply turns over the player selected (i.e., encircled) positions of **9**, **19**, **23**, **32**, **35**, and **43**. This uncovers, as shown in FIG. **7**(*c*), behind player selected positions **32** and **35** two matrix entries **75***c* of the hidden pattern **70***c*. Nothing is displayed at locations **9**, **19**, **23**, and **43**. The player knows that the hidden pattern is a bar having four spaces from area **130** and, hence, easily solves the bonus game by pressing areas **33** and **34** to complete the hidden pattern. This is an easy bonus win for

this player. The four matrix bar **70***c*, of course, is randomly oriented anywhere within the overall matrix of 1 through 49 positions. In this case, the player playing the underlying keno game had three keno matches, received a suitable payoff and then went on to the opportunity to solve the bonus game of the present invention to receive a bonus payoff. In a second embodiment only the keno randomly selected numbers are uncovered.

In the third embodiment illustrated in FIG. **7**(*d*), the player selected numbers (i.e., encircled) and the randomly selected numbers (i.e., placed in squares) are each uncovered, as shown in FIG. **7**(*d*). This results in the same information to the player who then proceeds to press locations **33** and **34** to complete the pattern and win the bonus game. This embodiment provides more spaces that are uncovered and, therefore, a greater chance of solving the bonus game. In the fourth embodiment, only the visible positions that correspond to both the player selected and the keno game randomly selected numbers would be uncovered (i.e., **23**, **32**, and **35** in FIG. **7***b*). This provides a more difficult game. Of course, other equivalent embodiments are possible.

It is to be expressly understood that under either embodiment, the player is given either automatically, upon the basis of a separate wager, or any other suitable activation approach, a chance to participate in a pattern recognition game in conjunction with the underlying standard keno game.

In the preferred embodiment, the pattern (such as the four matrix entry bar **70***c*, as shown in FIGS. **7**(*c*) and **7**(*d*), is preferably displayed such as being printed on or near the screen **100**. However, it is to be expressly understood that with each keno game a new pattern can be randomly selected and first displayed to the player to recognize the pattern before playing the keno game. Or, that the player can select which pattern to play from a database. Many alternatives can be incorporated under the teachings of the present invention.

The above disclosure sets forth a number of embodiments of the present invention. Those skilled in this art will however appreciate that other arrangements or embodiments, not precisely set forth, could be practiced under the teachings of the present invention. For example, while a virtual memory has been disclosed into which the hidden pattern is randomly placed, any suitable software, hardware, and/or combination thereof design can be used to functionally associate the hidden pattern to the gaming matrix. For example, a wide variety of designs could be utilized to provide the gaming matrix with visible portions such as a back lit panel, a matrix of liquid crystal displays, etc. Therefore, the scope of this invention should only be limited by the scope of the following claims and not by the title, the abstract, the background of the invention, and/or the summary of the present invention.

We claim:

1. A method for a player to play a casino game comprising:

receiving a wager to play a gaming machine in the casino game,

providing a bonus game of strategy with game results obtainable using strategy within a given number of player inputs,

providing knowledge to the player of the game results in advance of play of the bonus game of strategy,

randomly entering the bonus game of strategy from the gaming machine,

receiving up to the given number of player inputs from the player during play of the bonus game of strategy,

displaying to the player, after each received player input, whether one of the game results was obtained, the player using strategy based on the provided knowledge and the aforesaid displaying to select the next player input,

ending the bonus game of strategy when the given number of player inputs are received or when the game results are displayed,

awarding the player when the game results are displayed.

2. The method of claim **1** wherein an additional wager is received from the player to play the bonus game of strategy.

3. The method of claim **1** wherein the bonus game of strategy is a puzzle and wherein providing knowledge comprises displaying a representation of a solution to the puzzle that can be obtained in the puzzle within the given number of player inputs, the solution being the game results and further comprising:

randomly placing the solution in the puzzle, the randomly placed solution hidden from view,

displaying to the player a plurality of play positions on the puzzle, the game results in the plurality of positions corresponding to the randomly placed solution, each received player input selecting one of the play positions.

4. A method for a player to play a casino bonus game comprising:

providing a hidden pattern that can be uncovered using player strategy within a given number of player in puts,

providing knowledge concerning the hidden pattern in advance of play of the casino bonus game,

displaying to the player a plurality of play positions, each play position comprising either a hidden correct or incorrect result, all of the hidden correct results corresponding to the hidden pattern,

receiving player inputs for selected ones of the plurality of play positions,

displaying to the player, after each received player input, whether the selected one play position is a correct result or an incorrect result, the player using strategy based on the displayed result and the provided knowledge to select the next play position,

ending the casino bonus game when the given number of player inputs are received or when all of the correct results for the hidden pattern are displayed thereby uncovering the hidden pattern,

awarding the player based on the number of correct results displayed, with the player using strategy to uncover the hidden pattern obtaining the highest award.

5. The method of claim **4** wherein providing knowledge comprises:

displaying to the player a representation of the hidden pattern to the player.

6. The method of claim **5** wherein the representation is the shape of the hidden pattern.

7. The method of claim **5** wherein the representation is information concerning the hidden pattern.

8. The method of claim **5** wherein the representation is permanently displayed at the casino bonus game.

9. The method of claim **4** further comprising:

providing a plurality of hidden patterns,

receiving from the player an input selecting one of the hidden patterns to be used in the casino bonus game.

10. The method of claim **4** wherein the given number of player inputs are each based upon the display of an incorrect result after each player input.

11. The method of claim 4 wherein the given number of player inputs is incremented by an amount when a correct result is displayed.

12. A method for a player to play a strategy-based casino bonus game comprising:

entering the strategy-based casino bonus game from a gaming machine,

displaying to the player a representation of a solution to a puzzle that can be obtained in the strategy-based casino bonus game,

randomly placing the solution in the puzzle, the randomly placed solution hidden from view,

displaying to the player of the strategy-based casino bonus game a plurality of play positions on the puzzle, each of said plurality of play positions comprising either a hidden correct or incorrect result, all of the hidden correct results in the plurality of play positions corresponding to the randomly placed solution,

receiving from the player in the strategy-based casino bonus game up to the given number of player inputs corresponding to selected ones of the plurality of play positions,

displaying to the player, after each received player input, whether the selected one play position is a correct result or an incorrect result,

ending the strategy-based casino bonus game when the given number of player inputs are received or when all of the correct results for the hidden randomly placed solution are displayed,

awarding the player based on the number of correct results displayed, the player using strategy in the given number of player inputs to display the solution obtaining the highest award,

returning to the gaming machine.

13. The method of claim 12 further comprising:

receiving a solve input in the strategy-based casino bonus game from the player after the display of a correct result,

in response to the received solve input, receiving in the strategy-based casino bonus game only a number of inputs from the player corresponding to the remaining undisplayed correct results,

awarding the player a solve jackpot when each of the aforesaid inputs are displayed as correct results.

14. The method of claim 12 wherein the possible play positions are formed in a matrix and wherein the solution is at least one pattern.

15. A method for a player to play a strategy-based casino bonus game comprising:

displaying to the player at least one solution to a puzzle that can be obtained in the strategy-based casino bonus game with player strategy within a given number of player inputs,

randomly entering the strategy-based casino bonus game from a gaming machine,

randomly placing the at least one solution in the puzzle, the randomly placed at least one solution hidden from view,

displaying to the player of the strategy-based casino bonus game a plurality of play positions on the puzzle, each of said number of play positions comprising either a hidden correct or incorrect result, all of the hidden correct results in the plurality of positions corresponding to the at least one randomly placed solution,

receiving from the player in the strategy-based casino bonus game up to the given number of player inputs corresponding to selected ones of the plurality of play positions,

displaying to the player, after each received player input, whether the selected one play position is a correct result or an incorrect result,

returning to the gaming machine after the display of the correct or the incorrect result,

ending the strategy-based casino bonus game when the given number of player inputs are received or when all of the correct results for the at least one hidden randomly placed solution are displayed,

awarding the player a value based on the number of correct results displayed, the player using strategy to display the at least one solution obtaining the highest award.

16. The method of claim 15 further comprising:

receiving a solve input in the strategy-based casino bonus game from the player after the display of a correct result,

in response to the received solve input, receiving in the strategy-based casino bonus game only a number of inputs from the player corresponding to the remaining undisplayed correct results,

awarding the player a solve jackpot when each of the aforesaid inputs are displayed as correct results.

17. The method of claim 15 wherein the possible play positions are formed in a matrix and wherein the solution is at least one pattern.

18. A method for a player to play a strategy-based casino bonus game comprising:

displaying to the player knowledge concerning a plurality of solutions that can be obtained in the strategy-based casino bonus game with player strategy within a given number of player inputs,

displaying to the player of the strategy-based casino bonus game a plurality of play positions,

randomly placing the plurality of solutions in the plurality of play positions, the randomly placed plurality of solutions hidden from view of the player, each of said number of play positions comprising either a hidden correct or incorrect result, all of the hidden correct results in the plurality of positions corresponding to the randomly placed plurality of solutions,

receiving from the player in the strategy-based casino bonus game up to the given number of player inputs corresponding to selected ones of the plurality of positions,

determining, after each received player input, whether the selected one position is a correct result or an incorrect result,

when a correct result is determined, displaying the entire one solution in the plurality of solutions having the correct result,

ending the strategy-based casino bonus game when the given number of player inputs are received or when the plurality of randomly placed hidden solutions are displayed,

awarding the player a value based on the number of solutions displayed, the player using strategy to display the plurality of solutions obtaining the highest award,

returning to the gaming machine.

19. The method of claim 18 wherein the possible play positions are formed in a matrix and wherein each of the plurality of solutions is a pattern.

20. A method for a player to play a strategy-based casino bonus game that is entered during play of a gaming machine, the method comprising:

displaying to the player knowledge concerning a plurality of solutions that can be obtained in the strategy-based casino bonus game with player strategy within a given number of player inputs,

displaying to the player of the strategy-based casino bonus game a plurality of play positions,

randomly placing the plurality of solutions in the plurality of play positions, the randomly placed plurality of solutions hidden from view of the player, each of said number of play positions comprising either a hidden correct or incorrect result, all of the hidden correct results in the plurality of positions corresponding to the randomly placed plurality of solutions,

receiving from the player in the strategy-based casino bonus game up to the given number of player inputs corresponding to selected ones of the plurality of positions,

determining, after each received player input, whether the selected one position is a correct result or an incorrect result,

when a correct result is determined, displaying the entire solution in the plurality of solutions having the correct result,

when an incorrect result is determined, displaying the incorrect result,

returning to the gaming machine after the display of the entire solution having the correct result or after display of the incorrect result,

ending the strategy-based casino bonus game when the given number of player inputs are received or when the plurality of randomly placed hidden solutions are displayed.

21. The method of claim **20** wherein the possible play positions are formed in a matrix and wherein each of the plurality of solutions is a pattern.

* * * * *