Trials@uspto.gov
571-272-7822

Paper 9
Entered: August 11, 2023

UNITED STATES PATENT AND TRADEMARK OFFICE

BEFORE THE PATENT TRIAL AND APPEAL BOARD

DK CROWN HOLDINGS INC.,
Petitioner,

v.

DIOGENES LIMITED,
Patent Owner.

IPR2023-00268
Patent 11,200,779 B2

Before WILLIAM V. SAINDON, HYUN J. JUNG, and
SEAN P. O'HANLON, *Administrative Patent Judges*.

Opinion for the Board filed by O'HANLON, *Administrative Patent Judge*.

Opinion Dissenting filed by SAINDON, *Administrative Patent Judge*.

O'HANLON, *Administrative Patent Judge*.

DECISION
Denying Institution of *Inter Partes* Review
35 U.S.C. § 314

I. INTRODUCTION

A. Background

DK Crown Holdings Inc. ("Petitioner") filed a Petition for *inter partes* review of claims 1–3, 5–10, 16–18, and 21–25 ("the challenged claims") of U.S. Patent No. 11,200,779 B2 (Ex. 1001, "the '779 patent"). Paper 2 ("Pet."), 11. Diogenes Limited ("Patent Owner") filed a Preliminary Response. Paper 6 ("Prelim. Resp.").

Institution of an *inter partes* review is authorized by statute only when "the information presented in the petition . . . and any response . . . shows that there is a reasonable likelihood that the petitioner would prevail with respect to at least 1 of the claims challenged in the petition." 35 U.S.C. § 314(a) (2018).

We have authority, acting on the designation of the Director, to determine whether to institute an *inter partes* review under 35 U.S.C. § 314 and 37 C.F.R. § 42.4(a). For the reasons set forth below, upon considering the Petition, Preliminary Response, and evidence of record, we conclude that the information presented in the Petition fails to establish a reasonable likelihood that Petitioner would prevail in showing the unpatentability of any of the challenged claims. Accordingly, we decline to institute *inter partes* review.

B. Real Parties in Interest

Petitioner identifies itself, DraftKings Inc., Crown Gaming Inc., and SBTech (Global) Limited as real parties in interest. Pet. 11.

Patent Owner identifies itself and Colossus (IOM) Limited as real parties in interest. Paper 4, 2.

C. Related Matters

The parties indicate that the '779 patent is the subject of the following district court proceeding:

> *Diogenes Limited v. DraftKings Inc.*, Case No. 21-cv-01695 (D. Del. filed December 1, 2021) ("the Delaware litigation").

Pet. 12; Paper 4, 2. Patent Owner notes other petitions for *inter partes* review filed by Petitioner and challenging patents owned by Patent Owner. Paper 4, 2.

D. The Challenged Patent

The '779 patent discloses a system for conducting a multi-leg wagering event. Ex. 1001, 8:30–42, 14:35–45. Figure 1 illustrates the system hardware and is reproduced below. *Id.* at 5:5–7.

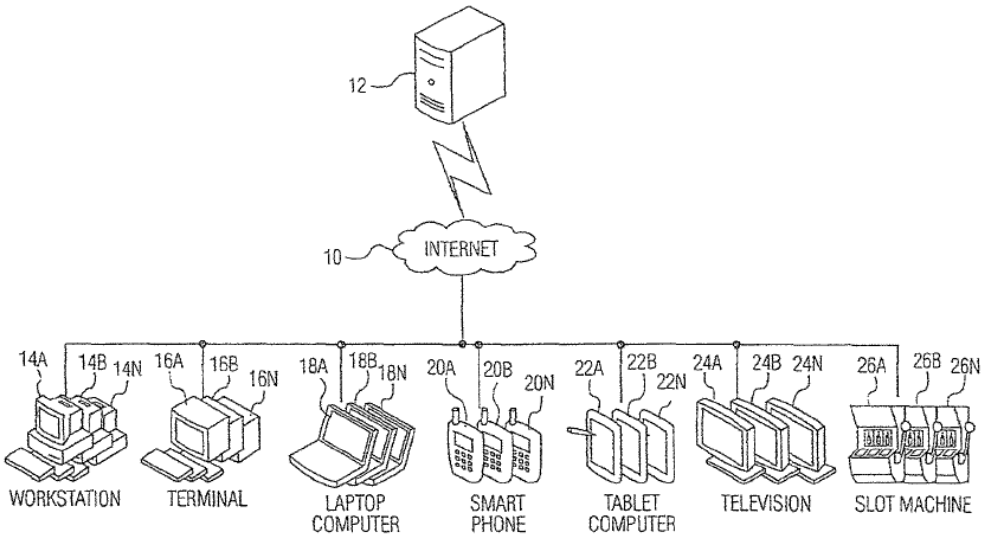

FIG. 1

Figure 1 shows the wagering system, including central server system 12 and wager input devices such as wagering stations 14 and wagering terminals 16.

Id. at 5:8–16. The central server system controls the operation of the wagering system and allows players to enter wagers via the input devices. *Id.* at 7:25–28. The wagering event has multiple legs and the players input a selection for each leg. *Id.* at 5:24–6:7, 11:56–12:3. The player receives a printed or electronic ticket that represents the wager. *Id.* at 11:63–65. The system determines if the players' inputs for each of the legs are correct. *Id.* at 13:29–33. After a predetermined number of legs have been completed, the system sends a buy-out offer to players that have correct inputs for the completed legs of the wager. *Id.* at 13:34–54, 20:63–21:7. The buy-out offer may be for the player's entire ticket or a portion thereof. *Id.* at 13:54–58. If a player accepts a full buy-out offer, the player receives the agreed-upon award and the player's participation in the wagering event ends. *Id.* at 13:63–14:1. If a player accepts a partial buy-out offer, the player's participation in the wagering event will continue, but the player's award will be reduced by the agreed-upon amount. *Id.* at 14:37–43.

E. The Challenged Claims

Petitioner challenges claims 1–3, 5–10, 16–18, and 21–25 of the '779 patent. Pet. 11, 20. Claims 1 and 16 are independent. Claim 1 is illustrative of the challenged claims and is reproduced below.

> 1. A system comprising:
>
> a processor operatively coupled to a memory configured to store computer-readable instructions that, when executed by the processor, cause the processor to:
>
> receive, by a trading engine module of a system controller, a wager on a wagering event from one or more input devices via a communications interface, the wager input via a user interface of the one or more input devices;

store, by the system controller, the wager in a record within a database, the record comprising wager information for one or more wagers associated with one or more participants;

continuously retrieve, by the system controller, data in real time related to a progress of the wagering event;

recalculate, by the system controller, the wager information in real time based on the continuously retrieved data;

continuously evaluate, by the system controller, the recalculated wager information;

determine, by the system controller, that a participant of the one or more participants is eligible to win an award based on one or more of the wager and a potential outcome of the wagering event;

generate, by the system controller, an option in real time for the participant to one or more of fully cash out of the wager or partially cash out of the wager prior to a conclusion of the wagering event for at least a portion of the award;

cause, by the system controller, the option to be presented to the participant via the user interface of the one or more input devices;

receive, by the system controller, a selection of the option for the participant from the one or more input devices prior to conclusion of the wagering event; and

cause, by the trading engine module, the at least the portion of the award to be presented to the participant, such that the user interface displays one or more of a confirmation that the option has been selected and a value of the at least the portion of the award.

Ex. 1001, 51:15–54.

F. Asserted Grounds of Unpatentability

The Petition relies on the following prior art reference:

Name	Reference	Exhibit
Scott	US 2012/0309489A1, published December 6, 2012	1006

Petitioner asserts the following grounds of unpatentability:

Claim(s) Challenged	35 U.S.C. §	Reference(s)
1–3, 5–10, 16–18, 21–25	102	Scott
1–3, 5–10, 16–18, 21–25	103	Scott and general knowledge of a Person of Ordinary Skill in the Art

Pet. 20. Petitioner submits a declaration of Dwight Crevelt (Ex. 1007, "Crevelt Declaration") in support of its contentions. Patent Owner submits a declaration of Olaf Vancura, Ph.D. (Ex. 2001) in support of its preliminary contentions.

II. PATENTABILITY ANALYSIS

A. Principles of Law

"In an [*inter partes* review], the petitioner has the burden from the onset to show with particularity why the patent it challenges is unpatentable." *Harmonic Inc. v. Avid Tech., Inc.*, 815 F.3d 1356, 1363 (Fed. Cir. 2016) (citing 35 U.S.C. § 312(a)(3) (requiring *inter partes* review petitions to identify "with particularity . . . the evidence that supports the grounds for the challenge to each claim")). Petitioner bears the burden of persuasion to prove unpatentability of each challenged claim by a preponderance of the evidence. 35 U.S.C. § 316(e). This burden never shifts to Patent Owner. *Dynamic Drinkware, LLC v. Nat'l Graphics, Inc.*,

800 F.3d 1375, 1378 (Fed. Cir. 2015). The Board may authorize an *inter partes* review if we determine that the information presented in the Petition and Patent Owner's Preliminary Response shows that there is a reasonable likelihood that Petitioner will prevail with respect to at least one of the claims challenged in the petition. 35 U.S.C. § 314(a).

"Under 35 U.S.C. § 102 a claim is anticipated 'if each and every limitation is found either expressly or inherently in a single prior art reference.'" *King Pharm., Inc. v. Eon Labs, Inc.*, 616 F.3d 1267, 1274 (Fed. Cir. 2010) (quoting *Celeritas Techs. Ltd. v. Rockwell Int'l Corp.*, 150 F.3d 1354, 1360 (Fed. Cir. 1998)). "Anticipation requires the presence in a single prior art disclosure of all elements of a claimed invention arranged as in the claim." *Therasense, Inc. v. Becton, Dickinson & Co.*, 593 F.3d 1325, 1332 (Fed. Cir. 2010) (quoting *Connell v. Sears, Roebuck & Co.*, 722 F.2d 1542, 1548 (Fed. Cir. 1983)).

A reference inherently discloses an element of a claim "if that missing characteristic is necessarily present, or inherent, in the single anticipating reference." *Schering Corp. v. Geneva Pharm.*, 339 F.3d 1373, 1377 (Fed. Cir. 2003) (citing *Cont'l Can Co. USA, Inc. v. Monsanto Co.*, 948 F.2d 1264, 1268 (Fed. Cir. 1991)). "Inherency, however, may not be established by probabilities or possibilities. The mere fact that a certain thing *may* result from a given set of circumstances is not sufficient." *Therasense*, 593 F.3d at 1332 (quoting *Cont'l Can*, 948 F.2d at 1269).

A patent claim is unpatentable under 35 U.S.C. § 103 if the differences between the claimed subject matter and the prior art are such that the subject matter, as a whole, would have been obvious at the time the invention was made to a person having ordinary skill in the art to which the

subject matter pertains. *KSR Int'l Co. v. Teleflex Inc.*, 550 U.S. 398, 406 (2007). The question of obviousness is resolved on the basis of underlying factual determinations including (1) the scope and content of the prior art, (2) any differences between the claimed subject matter and the prior art, (3) the level of skill in the art, and (4) when in evidence, any objective evidence of nonobviousness.[1] *Graham v. John Deere Co.*, 383 U.S. 1, 17–18 (1966).

B. Level of Ordinary Skill in the Art

The level of ordinary skill in the art is "a prism or lens" through which we view the prior art and the claimed invention. *Okajima v. Bourdeau*, 261 F.3d 1350, 1355 (Fed. Cir. 2001). The person of ordinary skill in the art is a hypothetical person presumed to have known the relevant art at the time of the invention. *In re GPAC Inc.*, 57 F.3d 1573, 1579 (Fed. Cir. 1995). In determining the level of ordinary skill in the art, we may consider certain factors, including: "(1) the educational level of the inventor; (2) type of problems encountered in the art; (3) prior art solutions to those problems; (4) rapidity with which innovations are made; (5) sophistication of the technology; and (6) educational level of active workers in the field." *Best Med. Int'l, Inc. v. Elekta Inc.*, 46 F.4th 1346, 1353 (Fed. Cir. 2022) (citations omitted). "The patent's purpose can also be informative." *Id.*

Petitioner contends that a person having ordinary skill in the art at the time of the invention ("POSITA") would have had "a bachelor's degree in electrical engineering, computer science, or a similar field; and at least two

[1] At this stage of the proceeding, the parties have not directed us to any such objective evidence.

years of experience in the wager based gaming industry." Pet. 23 (citing Ex. 1007 ¶ 28). Petitioner states that "[a] person with less education but more relevant practical experience may also meet this standard." *Id.* (citing Ex. 1007 ¶ 28).

Patent Owner does not contest Petitioner's proposed definition of the level of ordinary skill in the art. *See generally* Prelim. Resp. We note that Patent Owner's declarant, Dr. Vancura, uses essentially the same definition as Petitioner. *See* Ex. 2001 ¶ 33.

Based on the arguments presented and the cited references, we find Petitioner's definition of the level of ordinary skill reasonable and for purposes of this Decision, adopt it as our own.

C. Claim Construction

In an *inter partes* review, claims are construed using the same claim construction standard that would be used to construe the claims in a civil action under 35 U.S.C. § 282(b), including construing the claims in accordance with the ordinary and customary meaning of such claims as understood by one of ordinary skill in the art and the prosecution history pertaining to the patent. 37 C.F.R. § 42.100(b). "[T]he ordinary and customary meaning of a claim term is the meaning that the term would have to a person of ordinary skill in the art in question at the time of the invention" and "after reading the entire patent." *Phillips v. AWH Corp.*, 415 F.3d 1303, 1313, 1321 (Fed. Cir. 2005) (en banc). In addition to the specification and prosecution history, we also consider use of the terms in other claims and extrinsic evidence including expert and inventor testimony, dictionaries, and learned treatises, although extrinsic evidence is less

significant than the intrinsic record. *Id.* at 1312–17. Usually, the specification is dispositive, and it is the single best guide to the meaning of a disputed term. *Id.* at 1315.

"The Board is required to construe 'only those terms . . . that are in controversy, and only to the extent necessary to resolve the controversy.'" *Realtime Data, LLC v. Iancu*, 912 F.3d 1368, 1375 (Fed. Cir. 2019) (alteration in original) (quoting *Vivid Techs., Inc. v. Am. Sci. & Eng'g, Inc.*, 200 F.3d 795, 803 (Fed. Cir. 1999)).

Petitioner states that "[n]o terms of the '779 Patent Challenged Claims require construction beyond their plain and ordinary meaning." Pet. 23 (citing Ex. 1007 ¶¶ 54–55). "Patent Owner agrees . . . that the claim terms can be afforded their plain and ordinary meaning." Prelim. Resp. 11.

Although the parties do not propose any terms for construction, this Decision turns on interpretation of "continuously" as used in the claims of the '779 patent. As explained in more detail in section II.E below, we interpret "continuously" performing a task to exclude performing that task at discrete time points. No further claim interpretation is needed.

D. Overview of the Asserted Prior Art

Scott discloses systems for electronic wagering games, such as poker games, card games, or slot games. Ex. 1006 ¶¶ 2, 10. As part of a system operating a wagering game, Scott describes a "value engine" that calculates a "current cash value" of a player's in-process wager and "present[s] the player with a challenging choice to . . . accept a current cash value for his or her hand or to forgo the current cash value to attempt to achieve a winning outcome (and possibly a larger award)." *Id.* ¶ 8. Figure 1B, reproduced

below, illustrates a block diagram of a gaming machine having a value engine. *Id.* ¶ 25.

Fig. 1B

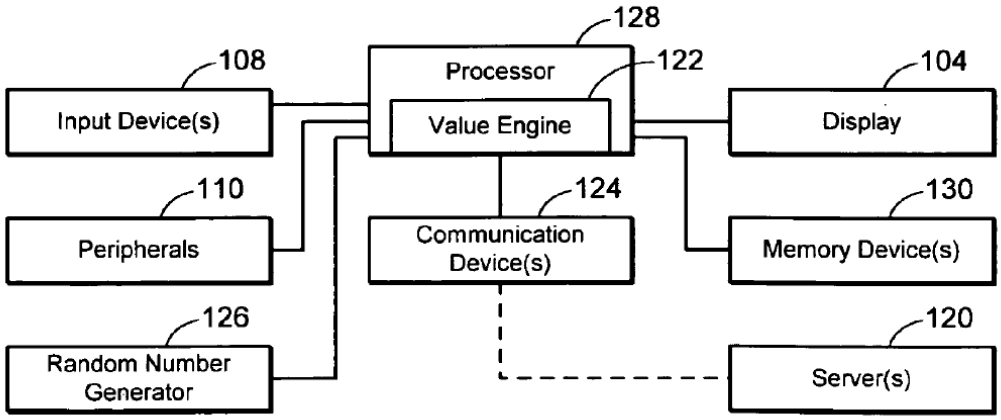

Figure 1B shows a block diagram of a gaming machine 100, including value engine 122. *Id.* ¶ 40. The value engine "is configured to evaluate game outcomes at various stages of a game" and "determine a monetary or cash value for the current game outcome and present this value to a player." *Id.* ¶ 33. The current cash value may be determined in a number of ways, such as by averaging the awards from all likely winning outcomes or selecting the median of such winning amounts. *Id.* ¶ 89. The player may choose to accept the presented cash value and forgo the opportunity to win a larger award. *Id.* ¶ 34.

The "determination of a current cash value can be triggered by various events." Ex. 1006 ¶ 36. For example, "as each individual playing card or slot symbol is revealed, a new current cash value may be calculated." *Id.* ¶ 67. "Alternatively, current cash value may be determined and presented at the end of each dealing stage of a game," such as "after the initial deal, after one or more cards are held, or after one or more replacement cards are dealt"

in a video poker game. *Id.* Such determinations "may occur in real time or in substantially real time." *Id.*

E. Petitioner's Anticipation Challenge

Petitioner argues that claims 1–3, 5–10, 16–18, and 21–25 are anticipated by Scott. Pet. 28–83. In support of its showing, Petitioner relies upon the Crevelt Declaration. *Id.* (citing Ex. 1007). We have reviewed Petitioner's assertions and supporting evidence. For the reasons discussed below, and based on the record before us, we determine that Petitioner does not demonstrate a reasonable likelihood of prevailing in showing that at least one challenged claim is anticipated by Scott.

Independent claim 1 recites a system comprising a processor operatively coupled to a memory configured to store computer-readable instructions that, when executed by the processor, cause the processor to, in relevant part, "continuously retrieve, by the system controller, data in real time related to a progress of [a] wagering event; recalculate, by the system controller, the wager information in real time based on the continuously retrieved data; [and] continuously evaluate, by the system controller, the recalculated wager information." Ex. 1001, 51:15–54. Independent claim 16 recites a system for conducting a wagering event comprising substantially the same recitations. *Id.* at 54:1–45.

Petitioner maps Scott's processor 128, including value engine 122, to the recited processor. Pet. 30–31. Petitioner argues that the value engine retrieves data related to a game in the form of a player's current game

symbols or indicia.[2] *Id.* at 38, 42. Petitioner argues that Scott's value engine continuously retrieves this data because Scott uses it to determine a current cash value of the player's cards or symbols and Scott determines the current cash value "as each individual playing card or slot symbol is revealed." *Id.* at 39 (citing Ex. 1006 ¶¶ 67, 83). According to Petitioner, "Scott discloses that the calculation and presentation of the current cash value is 'continuous[]' throughout the wagering game in that it 'may continue with newly presented game symbols until the game is over . . . or until the player accepts a current cash value for his or her set of symbols.'" *Id.* (alterations in original) (emphasis omitted) (citing Ex. 1006 ¶ 81). Petitioner reproduces and annotates Scott's Figures 4 and 5 to identify what Petitioner characterizes as Scott's "continuous loop" of operation. *Id.* at 40–42.

Patent Owner argues that, rather than operating continuously, Scott retrieves data, and makes calculations and evaluations based on the retrieved data, in stages. Prelim. Resp. 12–20. Patent Owner argues that, as used in the '779 patent claims, "continuously" means "ongoing at all times." *Id.* at 16 (emphasis omitted) (citing Ex. 2001 ¶ 89). Conversely, Patent Owner argues, in Scott's process, "the current cash value is only 'determined' through data retrieval 'after each card or other game symbol is dealt to a player' and is thus determined in stages and not continuously." *Id.* at 20 (emphasis omitted) (citing Ex. 2001 ¶¶ 96–97). Patent Owner argues that,

> while Scott's gaming machine may, at discrete points during the event, retrieve data related to the progress of the event to

[2] We note that, at page 38 of the Petition, Petitioner also lists other types of data, but Petitioner limits its mapping to the player's current game symbols or indicia at page 42 of the Petition.

> determine/present the current cash value, once that current cash value is presented to the user at step 428, the system sits idle until a player either accepts or rejects the current cash value at step 432.

Id. (citing Ex. 2001 ¶ 98); *see also* Ex. 1006, Fig. 4. According to Patent Owner, "any break in retrieving data related to a progress of the wagering event is not continuous retrieval as claimed." Prelim. Resp. 20 (emphasis omitted) (citing Ex. 2001 ¶ 99). "Simply put, just because Scott's cash value process 'may continue' until it ends does not mean that the entire process, including the data retrieval, is 'continuous,' particularly where Scott's disclosure shows that data retrieval is on an as-needed basis . . . ." *Id.* at 16 (citing Ex. 2001 ¶ 89).

The '779 patent distinguishes between continuously performing a task and doing so at discrete time points:

> The server system 12 may [determine the appropriate value of a cash out offer] at any time, such as, and without limitation, at certain *discrete time points of a wagering event* (e.g., halftime of a sporting event) *or it may continuously evaluate the wagering event and incoming wagers and make multiple determinations in real time*.

Ex. 1001, 17:52–57 (emphasis added). The parties' witnesses interpret this language in the same manner. Patent Owner's witness, Dr. Vancura, testifies that, here, "the '779 patent draws a distinct contrast between 'discrete points' (e.g., halftime or other stoppage of play) and 'continuously' (e.g., real time during live play and thereby extremely time-sensitive)." Ex. 2001 ¶ 48 (emphasis omitted). Petitioner's witness, Mr. Crevelt, agrees that the '779 patent distinguishes performing tasks continuously from doing so at discrete times. Ex. 1007 ¶¶ 122, 137. We agree with this testimony

and interpret "continuously" performing a task to exclude performing that task at discrete time points.[3]

Although the parties' witnesses agree there is a distinction between "discrete points" and "continuously," our dissenting colleague perceives no difference between continuously performing a task and doing so at discrete time points, noting that computers run using a clock and follow a pre-defined series of commands. Dissent Op. 2, 4. We disagree with this interpretation. "[T]he ordinary and customary meaning of a claim term is the meaning that the term would have to a person of ordinary skill in the art in question at the time of the invention" and "after reading the entire patent." *Phillips*, 415 F.3d at 1313, 1321. A person of ordinary skill in the art, understanding that computers work using a clock and by following computer programs (*see* Dissent Op. 4 n.6), would understand that "continuous[]" data retrieval is limited to the speed at which the computer can operate. The skilled artisan, upon reading the disclosure of the '779 patent, would also recognize the difference between such continuous data retrieval and, instead, retrieving data at "discrete time points"—halftime of a sporting event in the '779 patent, upon presentation of a game symbol to a player after awaiting acceptance or rejection of a current cash value offer in Scott.

Scott discloses that the "determination of a current cash value can be triggered by various events." Ex. 1006 ¶ 36. For example, "as each individual playing card or slot symbol is revealed, a new current cash value may be calculated." *Id.* ¶ 67. "Alternatively, current cash value may be determined and presented at the end of each dealing stage of a game," such

[3] We note that "continuously" was not discussed during prosecution of the application resulting in the '779 patent. *See generally* Ex. 1002.

as "after the initial deal, after one or more cards are held, or after one or more replacement cards are dealt" in a video poker game. *Id.* Thus, Scott's retrieval of game information occurs at discrete time points. Petitioner's contentions acknowledge such triggering events in Scott. *See* Pet. 39 (arguing that Scott's value engine retrieves data "as each individual playing card or slot symbol is revealed" or "with newly presented game symbols" (emphasis omitted)).

Mr. Crevelt asserts that Scott discloses "a real time and continuous evaluation and determination of the current cash value." Ex. 1007 ¶¶ 122, 137 (citing Ex. 1006 ¶ 67). However, we do not see any such disclosure of performing tasks "continuously" in Scott. At the disclosure relied upon by Mr. Crevelt, Scott merely discusses presenting current cash values at various discrete times, namely "after each card or other game symbol is dealt to a player" or, "[a]lternatively, . . . at the end of each dealing stage of a game," such as "after the initial deal, after one or more cards are held, or after one or more replacement cards are dealt" in a video poker game. Ex. 1006 ¶ 67. Neither Petitioner nor Mr. Crevelt explains adequately how Scott's processor is configured to continuously retrieve data related to a status of a wagering event, recalculate wager information based on the continuously retrieved data, or continuously evaluate the recalculated wager information as recited by the challenged claims of the '779 patent.

We note that continuously retrieving wagering event data, recalculating wager information, and evaluating the recalculated wager information as recited in the challenged independent claims would be necessary for certain wagers disclosed by the '779 patent, such as the score and point differential of teams competing in a live sporting event. *See, e.g.*,

Ex. 1001, 13:21–26; *see also id.* at 22:23–24 (discussing wager buy back during live play of a football game), 23:5–9 (discussing "continuous cash-in ability" of a wager "during live play" and "during the running of a match"); Ex. 2001 ¶ 42 (discussing the generation of buy-out offers "during play based on time-sensitive game changes that affect odds"). Scott, on the other hand, does not contemplate use of its system in such live events; instead, Scott is limited to electronic wagering games such as poker games, card games, slot games, keno games, and bingo games. Ex. 1006 ¶¶ 2, 10, 70. Our dissenting colleague notes that dependent claim 3 of the '779 patent recites poker, slots, and keno. Dissent Op. 7. We perceive no relevant significance of these recitations. There is a difference between "live" wagering events (including live poker, slot, and keno games) and wagering events run and controlled by the same computer that pauses the wagering event to present a cash out offer to the player, as in Scott. We read claim 3 as pertaining to the former. We further observe that "continuous" data retrieval is required for actions to occur "in real time" only for such live wagering events; continuous data retrieval is not needed for actions, such as retrieving data related to a progress of the wagering event, in real time for Scott's system because such data is retrieved at discrete time points coinciding with presentation of new data.

Furthermore, Scott discloses that, during operation of its gaming machine, a player places a wager (step 404) and the system presents one or more game symbols or indicia to the player (step 408). Ex. 1006 ¶ 71, Fig. 4. If the game is not over (step 412), the value engine generates and displays to the player a current cash value for the player's current game symbols (step 428). *Id.* ¶ 73, Fig. 4. The system then waits for the player to

accept or reject the current cash value (step 432). *Id.* ¶ 75, Fig. 4. If the player does not accept the current cash value, the process begins anew by presenting one or more additional game symbols to the player and generating the current cash value of the player's game symbols.[4] *Id.* ¶¶ 80–81, Fig. 4.

We agree that, at step 432, Petitioner has not explained adequately how Scott's processor retrieves data related to the progress of the wagering event. *See* Prelim. Resp. 20; Ex. 2001 ¶ 98. Although at step 432 Scott's processor monitors for and retrieves a player's acceptance or rejection of the current cash value (Ex. 1006 ¶ 75), Petitioner does not map this input to the recited data "related to a progress of the wagering event." Rather, as explained above, Petitioner maps only the player's current game symbols or indicia. Pet. 38, 42. By *not* retrieving the Petitioner-defined data related to a progress of the wagering event at step 432, Petitioner has not shown adequately how Scott "continuously" retrieves such data as required by the challenged claims.

Our dissenting colleague states that the waiting that occurs at step 432 is immaterial. Dissent Op. 7. We disagree. During this "waiting" time of step 432, no data related to a progress of the wagering event is retrieved. It seems axiomatic, therefore, that Scott does not continuously retrieve such data.

Our dissenting colleague also states that, during this waiting time, Scott's system continuously checks for occurrences of discrete events. Dissent Op. 7. At step 432, Scott's processor does not retrieve data

[4] Although Scott presents optional steps 436 and 440, Petitioner expressly states that its analysis does not rely on these steps. *See, e.g.*, Pet. 39 n.4.

regarding a triggering event. Instead, it awaits a player's acceptance or rejection of the current cash value. Ex. 1006 ¶ 75, Fig. 4. The challenged claims do not refer to discrete events or generic data; rather, the claims are specific to data "related to a progress of the wagering event." As explained above, by Petitioner's mapping of Scott to the challenged claims, this does not occur at step 432.

We also disagree with our dissenting colleague's claim interpretation because it appears to discount the "continuously" recitations. If "continuously" means repeating at a rate that provides for real time capabilities (Dissent Op. 4), then it is not clear what the "continuously" recitations add to the claims. For example, claim 1 recites "continuously retrieve . . . data in real time." Ex. 1001, 51:28–29. By our colleague's interpretation, this language would have the same meaning without "continuously." Our reviewing court has explained that reading recited terms out of claims is improper. *See Stumbo v. Eastman Outdoors, Inc.*, 508 F.3d 1358, 1362 (Fed. Cir. 2007) (denouncing claim constructions that render phrases in claims superfluous).

For at least the foregoing reasons, Petitioner has not shown sufficiently that Scott's processor continuously retrieves data related to a progress of a wagering event, recalculates wager information based on the continuously retrieved data, or continuously evaluates the recalculated wager information. Therefore, Petitioner does not demonstrate a reasonable likelihood that Scott anticipates the challenged claims.

F. Petitioner's Obviousness Challenge

Petitioner argues that claims 1–3, 5–10, 16–18, and 21–25 would have been obvious in view of Scott and the general knowledge of a person of ordinary skill in the art. Pet. 83–86. In support of its showing, Petitioner relies upon the Crevelt Declaration. *Id.* (citing Ex. 1007). We have reviewed Petitioner's assertions and supporting evidence. For the reasons discussed below, and based on the record before us, we determine that Petitioner does not demonstrate a reasonable likelihood of prevailing in showing that at least one challenged claim would have been obvious.

Petitioner presents obviousness arguments in the event that we "determine[] that Scott fails to disclose storing the wager in a record within a database" or "that Scott does not disclose any limitation in claim 16 requiring a 'plurality' rather than the 'one or more' recited in the corresponding limitations of claim 1." Pet. 83. Petitioner argues that it would have been obvious to store records regarding players' wagers in a database because it was well-known to do so, the '779 patent recognizes such database use as prior art, and it would have been merely common sense to do so. *Id.* at 83–85. Petitioner argues that it would have been merely common sense to use Scott's system with multiple players. *Id.* at 85–86.

Petitioner's obviousness arguments do not address the shortcomings regarding the "continuously" recitations discussed in section II.E above. For at least the same reasons as discussed above, Petitioner does not demonstrate a reasonable likelihood of prevailing in showing that at least one challenged claim would have been obvious.

III. DISCRETIONARY DENIAL

Patent Owner argues that we should exercise discretion under 35 U.S.C. § 314(a) to deny institution based on the Delaware litigation. Prelim. Resp. 28–31. Because we determine that the Petition fails to set forth a reasonable likelihood that Petitioner would prevail with respect to its challenges to the '779 patent, we do not reach Patent Owner's arguments that we should exercise discretion to deny institution.

IV. CONCLUSION

For the foregoing reasons, we are not persuaded that the Petition establishes a reasonable likelihood that Petitioner would prevail in any of its challenges to claims 1–3, 5–10, 16–18, and 21–25 of the '779 patent.

V. ORDER

In consideration of the foregoing, it is hereby ordered that the Petition is *denied*, and no trial is instituted.

DraftKings, Ex. 1065, p. 21
DK Crown v. Diogenes, IPR2023-00267

UNITED STATES PATENT AND TRADEMARK OFFICE

BEFORE THE PATENT TRIAL AND APPEAL BOARD

DK CROWN HOLDINGS INC.,
Petitioner,

v.

DIOGENES LIMITED,
Patent Owner.

IPR2023-00268
Patent 11,200,779 B2

Before WILLIAM V. SAINDON, HYUN J. JUNG, and SEAN P. O'HANLON, *Administrative Patent Judges*.

SAINDON, *Administrative Patent Judge, Dissenting.*

I respectfully dissent from my colleagues' decision denying the Petition. The majority construes "continuously' performing a task to exclude performing that task at discrete time points." Maj. Op. 10. I do not agree with this construction because, in my view, it incorporates limitations not found in the claim and takes a specific, narrow example from the specification and turns it into a broad, general prohibition that is not consistent with the claims or specification. Under my preliminary construction, Petitioner would have established a reasonable likelihood of success, and I would institute. I begin with my construction of the term "continuously," followed by how I would apply that term to the prior art reference.

In claim 1, the progress of a wagering event is evaluated in order to update and present a cash-out offer to the player during the course of the event, with the offer reflecting the current course of events and the relative strength of the player's wager given those events. *See, e.g.*, Ex. 1001, 17:47–57 (stating that the system may make determinations of a cash-out offer in real time by continuously evaluating the wagering event). The term "continuously" is found in two limitations: "continuously retrieve data . . . in real time related to a progress of the wagering event" and "continuously evaluate the recalculated wager information." These limitations are important because the computer in claim 1 is repeatedly (continuously) performing a series of discrete steps in which information about the wagering event is gathered and reviewed in order to evaluate the value of the player's wager in real time. The limitations must be performed "continuously" so that the claimed actions occur "in real time." In this way,

the specific occurrences in the game that affect the worth of the wager are considered at or near the time in which those occurrences happen.

The specification is consistent with this interpretation of "continuous[]" because it also equates "continuously" with a frequency that provides evaluation "in real time." In terms of *when* to evaluate the appropriate value of the cash out offer, the specification provides the following examples:

> The server system 12 may make this determination at any time, such as, and without limitation, at certain discrete time points of a wagering event (e.g., halftime of a sporting event) or it may continuously evaluate the wagering event and incoming wagers and make multiple determinations in real time.

Ex. 1001, 17:52–57. This sentence appears to be the only instance in the specification that sheds light on what "continuously evaluate" means in the context of claim 1.[5] This passage ties the word "continuous[]" to something happening "in real time." But claim 1 has already provided this link. The only new information provided here is a counterexample that a determination at a *discrete time point of an event such as halftime* is not a continuous determination in real time. This is not a particularly insightful example, however, because waiting to determine a wager's value until

[5] There is some language in column 23 regarding an ability to "offer continuous cash-in ability as soon it is technically possible, for example at the half-time of a match." Ex. 1001, 23:5–9; *see also* Prelim. Resp. 14 (citing this passage). But this is in reference to a continuous *ability to cash in*, i.e., an ability to take the cash out at any time, not the continuous evaluation of the strength of the wager. There is also similar language in the summary section of the '779 patent, but this section merely repeats claim language. *Id.* at 1:54–3:3.

halftime of a sporting event such as soccer is clearly not determining a wager value in real time.

I do not agree with the majority that the specification's single example here of a clearly not-in-real-time time point could be broadened into a blanket prohibition on all discrete time-based evaluations. The specification here is not precluding all time-based evaluations but rather distinguishing those that do not provide real-time evaluations. This must be the case if one considers the context of how a computer system would perform the claims. Logically, everything can be broken down into discrete events or discrete time points. A computer, which runs using a clock and following a pre-defined series of commands, would operate here by checking for specified discrete events at discrete points in time.[6] Every action occurs at a discrete point in time. In other words, the majority's construction that the claims preclude performing a task at discrete time points seemingly presents an impossibility.[7] *Cf. Amgen Inc. v. Hoechst Marion Roussel, Inc.*, 314 F.3d 1313, 1355 (Fed. Cir. 2003) (holding that prior art patents are presumed enabled). The claims and specification provide a sufficiently clear guide to how to interpret "continuously"—repeating at a rate that provides for the claimed real-time capabilities. I see no need to exclude the computer from operating at discrete time points (which I maintain must happen anyway), or to add limitations to the claims that would be difficult or impossible to

[6] Petitioner's proposed level of ordinary skill in the art includes a person with a computer science degree, who would understand that computers work using a clock and by following computer programs.

[7] A claim that is impossible to anticipate is also impossible to infringe. *Peters v. Active Mfg. Co.*, 129 U.S. 530, 537 (1889) ("That which infringes, if later, would anticipate, if earlier.").

measure, such as requiring the computer to retrieve data at "the speed at which the computer can operate" (Maj. Op. 15) or to only work on "live" wagering events (*id.* at 16–17). Thus, I do not join the majority's claim construction.

To summarize, I would construe the relevant claim language as follows. The "continuously retrieve . . . data" step requires the computer to repeatedly obtain data related to the progress of the wagering event at a rate sufficient to achieve real time data collection. The "continuously evaluate" step requires the computer to repeatedly evaluate the recalculated information (which is based on the retrieved data) at a rate sufficient to permit the later step of generating an option for a cash out of the wager in real time. In total, claim 1 recites a series of discrete steps repeated at a rate with short enough time intervals in between steps to provide a player with a cash out value of the wager that matches the state of the wagering event in real time. *See Hockerson-Halberstadt, Inc. v. Converse Inc.*, 183 F.3d 1369, 1374 (Fed. Cir. 1999) ("Proper claim construction . . . demands interpretation of the entire claim in context, not a single element in isolation.").[8] Further, as a corollary to these constructions, a computer need

[8] I disagree with the majority that my constructions would read out the word "continuously" (or otherwise equate it with "real time"). Maj. Op. 19. "Continuously" tells us that the claimed action must be repeated, whereas "in real time" tells us about the frequency with which to repeat in order to achieve the desired effect. I do not believe I read out nor add limitations, but rather construe the terms in view of the language of the claim and specification. *See SimpleAir, Inc. v. Sony Ericsson Mobile Commc'ns AB*, 820 F.3d 419, 429–30 (Fed. Cir. 2016) (analyzing a construction accused of rendering a term redundant, but noting "[t]he construction that stays true to the claim language and most naturally aligns with the patent's description of the invention will be, in the end, the correct construction.") (quoting

only collect data or update calculations at a speed that performs these steps in real time; what is real time is relative to the speed in which the meaningful events in the wagering event occur.[9] In my view, my constructions provide a means to evaluate what is and is not covered by the claims.

I now turn to the prior art grounds. In the Scott reference, an exemplary wagering event is video poker, and the event proceeds until the poker hand is complete and scored, or until the player takes the buyout. As Petitioner points out, the calculation of the current cash value is done continuously throughout the wagering game because it is presented as the

---

Renishaw PLC v. Marposs Societa' per Azioni, 158 F.3d 1243, 1250 (Fed. Cir. 1998)); *see also VLSI Tech. LLC v. Intel Corp.*, 53 F. 4th 646, 653 (Fed. Cir. 2022) (similar).

[9] For example, assume the wagering event is a soccer game and the wager is some prediction about the final score. An exemplary occurrence relevant to the wager would be the scoring of a goal. Thus, repeated (continuous) monitoring of goals (a discrete event) is required at discrete time intervals (when the computer checks for the occurrence of the discrete event) sufficiently frequent to provide data "in real time." Repeated monitoring of goals at the ends of periods, however, may not be considered "in real time." As another example, assume the wagering event is a hand of Texas Hold 'Em poker. Repeated monitoring of wagers, cards flipped, and folding is required at the time each event occurs in order to provide data "in real time." Notably, here, the game is very structured according to a series of turns, such that real-time monitoring occurs by monitoring each event in the pre-ordained sequence of events (which occur the same whether "live" in-person or using a computer). Skipping from the initial deal to the flop (a later stage of the game) would not be continuously evaluating in real time because the system would have missed several substantial game state changes relevant to the value of the wager. In both cases, as the system waits at each step of the poker game or at each second (or other appropriate time period) of soccer play, it must continuously retrieve data to know whether one of the discrete events it is looking for has happened.

cards are displayed or until the player takes the buyout. Pet. 38–42, 46–50. Petitioner notes that Scott offers the buyout in real time as the game is played. *Id.* at 39. Accordingly, in my view, Petitioner has shown a reasonable likelihood that Scott discloses or suggests the "continuously retrieved" and "continuously evaluate" steps of claim 1 because they occur in real time with the play of the game. That is, as information is gleaned from the cards, the buyout offer is immediately updated.

The majority's analysis alludes to the speed at which the game is played as being a factor, noting that Scott is tied to games such as poker, slots, keno, and bingo. Maj. Op. 17. But claim 3 of the '779 patent explicitly lists games such as poker, slots, and keno; claim 1 thus covers these games. *See* 35 U.S.C. § 112(d) (dependent claims incorporate the limitations of their independent claim). Further, the rate at which data is retrieved and evaluated to effect "real time" would naturally vary based on the nature of the wagering event. It is immaterial whether the computer spends some time waiting for a person to act—it is continuously checking until it recognizes some discrete event has happened. As I mentioned above, any computerized system will reduce into discrete steps occurring at discrete points in time; "discreteness" or "the speed at which the computer can operate" is not the way to evaluate "continuously." The measuring stick for "continuously" is instead found in the claim, which requires "real time" presentation of the cash out offer. Mere identification of the word "discrete" or "stage" as a disqualifier unduly focuses on words[10] instead of what they mean. *Application of Neugebauer*, 330 F.2d 353, 356 (CCPA 1964) ("The

[10] Words not in the claim.

claims *as a whole* must be analyzed in light of the disclosure to see if the article defined thereby is distinguishable in fact, vis-à-vis *in verbis*, over the prior art."), *id.* at 356 n.4 ("This principle, of general legal application, is immortalized in Latin: In verbis, non verba, sed res et ratio, quaeranda est. (In the construction of words, not the mere words, but the thing and the meaning, are to be inquired after.)").

In view of the above, I respectfully dissent from the majority's decision not to institute.

For PETITIONER:

Eliot D. Williams
G. Hopkins Guy III
Jamie R. Lynn
Thomas C. Martin
Andrew D. Wilson
BAKER BOTTS L.L.P.
Eliot.Williams@BakerBotts.com
Hop.Guy@BakerBotts.com
Jamie.Lynn@BakerBotts.com
Tommy.Martin@bakerbotts.com
Andrew.Wilson@BakerBotts.com
DLDraftKingsvDiogenes@BakerBotts.com

For PATENT OWNER:

Gianni Minutoli
Matthew Middleton
Steven Kellner
DLA PIPER LLP
gianni.minutoli@dlapiper.com
matthew.middleton@us.dlapiper.com
steven.kellner@dlapiper.com
DLA_Colossus_DCTDE@us.dlapiper.com