US009206970B2

(12) **United States Patent**
Halliwell et al.

(10) **Patent No.: US 9,206,970 B2**
(45) **Date of Patent: Dec. 8, 2015**

(54) **LINEAR LED LAMP TUBE WITH INTERNAL DRIVER AND INTERCONNECT TO LINE VOLTAGE AND METHODS OF INSTALLING THE SAME**

(71) Applicant: **Feit Electric Company, Inc.**, Pico Rivera, CA (US)

(72) Inventors: **Brian Halliwell**, Pico Rivera, CA (US); **David Matten**, Fort Lauderdale, FL (US)

(73) Assignee: **FEIT ELECTRIC COMPANY, INC.**, Pico Rivera, CA (US)

(*) Notice: Subject to any disclaimer, the term of this patent is extended or adjusted under 35 U.S.C. 154(b) by 61 days.

(21) Appl. No.: **13/766,532**

(22) Filed: **Feb. 13, 2013**

(65) **Prior Publication Data**

US 2014/0226321 A1 Aug. 14, 2014

(51) **Int. Cl.**

F21V 21/00	(2006.01)
F21V 27/02	(2006.01)
F21K 99/00	(2010.01)
F21Y 101/02	(2006.01)

(52) **U.S. Cl.**

CPC . ***F21V 27/02*** (2013.01); ***F21K 9/17*** (2013.01); *F21Y 2101/02* (2013.01); *Y10T 29/49002* (2015.01)

(58) **Field of Classification Search**

CPC F21Y 2101/02; F21V 27/02
USPC 362/217.01
See application file for complete search history.

(56) **References Cited**

U.S. PATENT DOCUMENTS

7,049,761	B2	5/2006	Timmermans et al.	
7,510,299	B2	3/2009	Timmermans et al.	
2009/0273917	A1 *	11/2009	Bartelink	362/20
2010/0270925	A1 *	10/2010	Withers	315/51
2012/0019166	A1	1/2012	Terasaka et al.	
2012/0243217	A1	9/2012	Szprengiel et al.	
2012/0320572	A1 *	12/2012	Fischer et al.	362/183

FOREIGN PATENT DOCUMENTS

JP	3119578	*	8/2006
WO	WO 2008141343 A1	*	11/2008
WO	WO 2011/117059 A1		9/2011

OTHER PUBLICATIONS

English translation of JP 3119578 (Aug. 2006).*
United States Patent and Trademark Office, Office Action for U.S. Appl. No. 13/961,230, Jan. 29, 2015, 16 pages, USA.

* cited by examiner

Primary Examiner — Anh Mai
Assistant Examiner — Hana Featherly
(74) *Attorney, Agent, or Firm* — Alston & Bird LLP

(57) **ABSTRACT**

In various embodiments, a light emitting diode (LED) lamp tube is provided along with a method of installing the LED tube lamp into a lighting fixture. In various embodiments, the LED tube lamp comprises: a tube; at least one LED positioned within the tube; a driver circuit positioned within the tube, the driver circuit comprising a set of electrical connecting wires; and a passage formed through at least a portion of the tube, the passage configured to receive there-through the set of electrical connecting wires. In various embodiments, the LED lamp tube comprises: a tube; at least one LED positioned within the tube; at least one end cap disposed on an end of the tube and at least one pin secured thereon wherein at least part of the pin is disposed outside of the tube and the at least one pin is electrically isolated from the at least one LED.

38 Claims, 11 Drawing Sheets

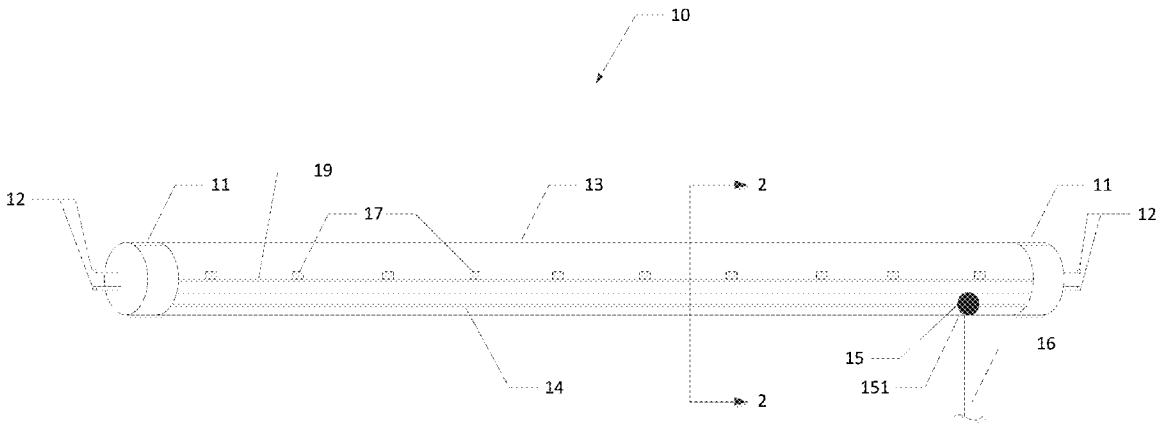

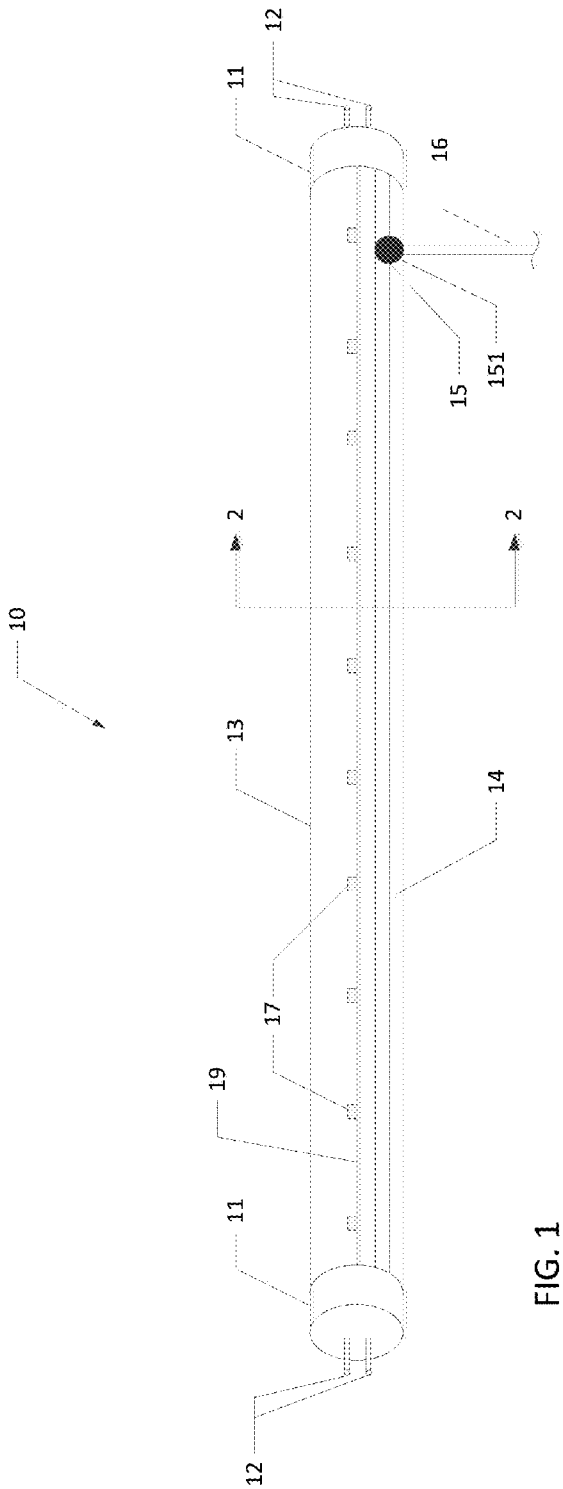

FIG. 1

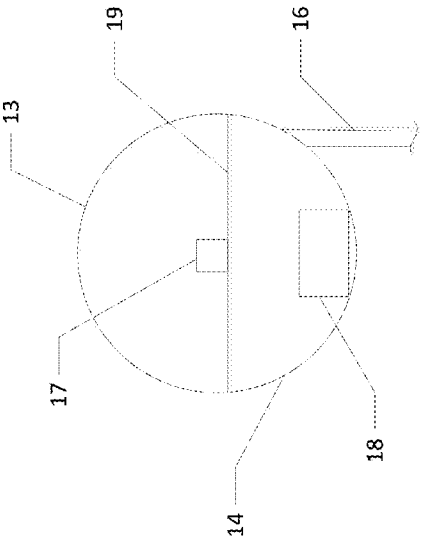

FIG. 2

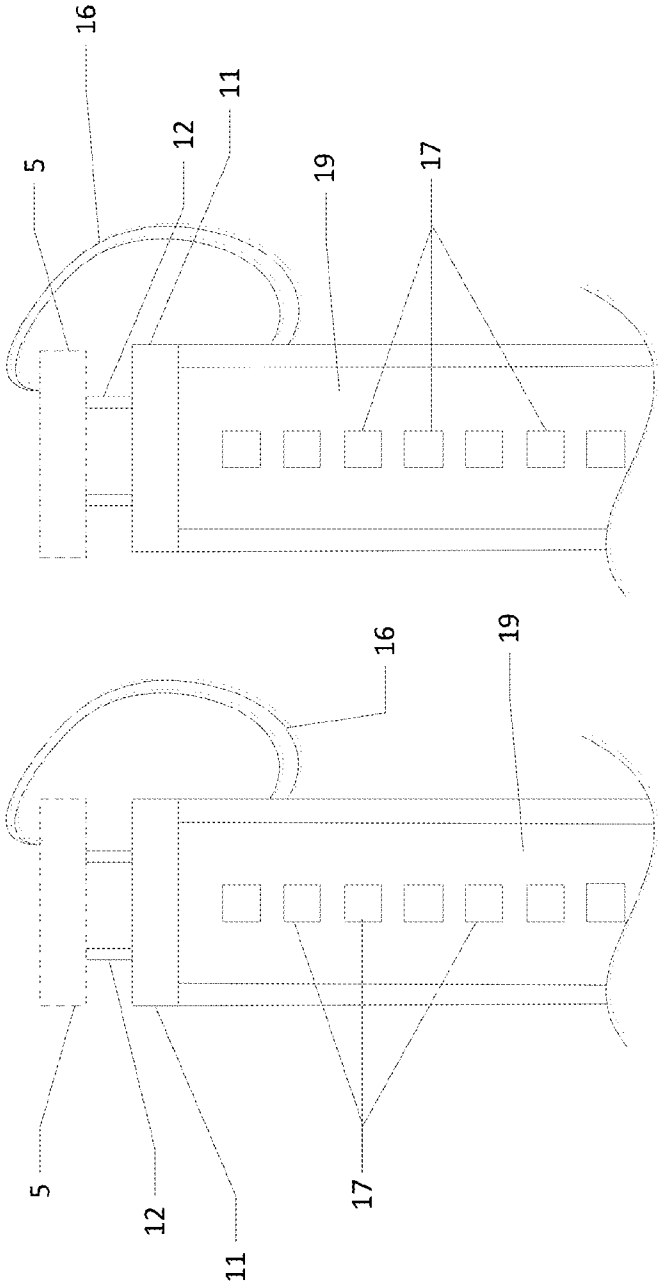

FIG. 3

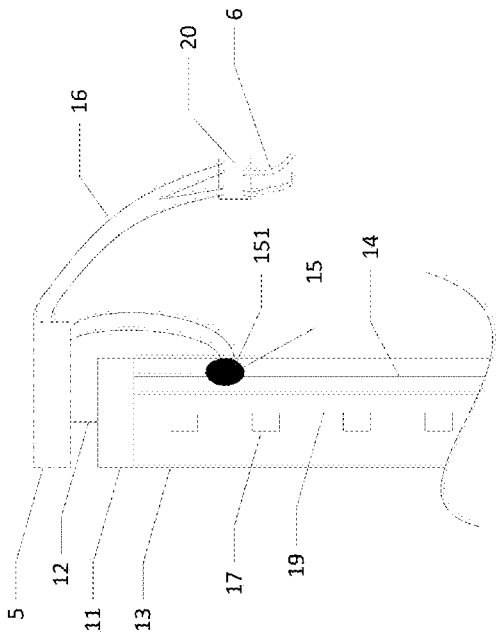
5
12
11
13
17
19
16
20
6
151
15
14

FIG. 4

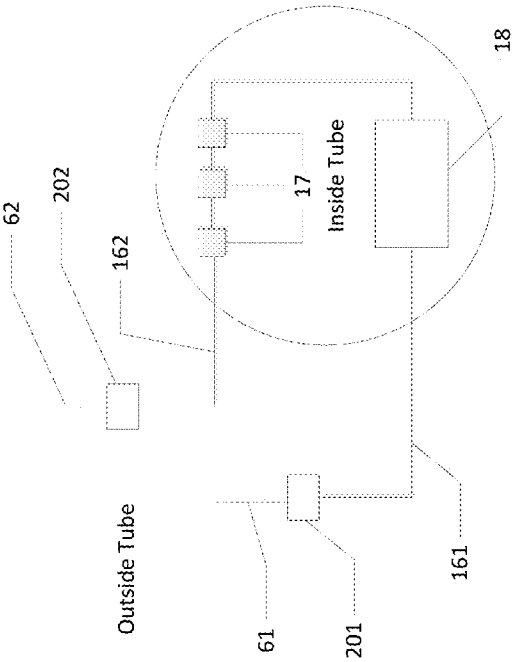
62
202
162
Outside Tube
61
201
161
17
Inside Tube
18

FIG. 5

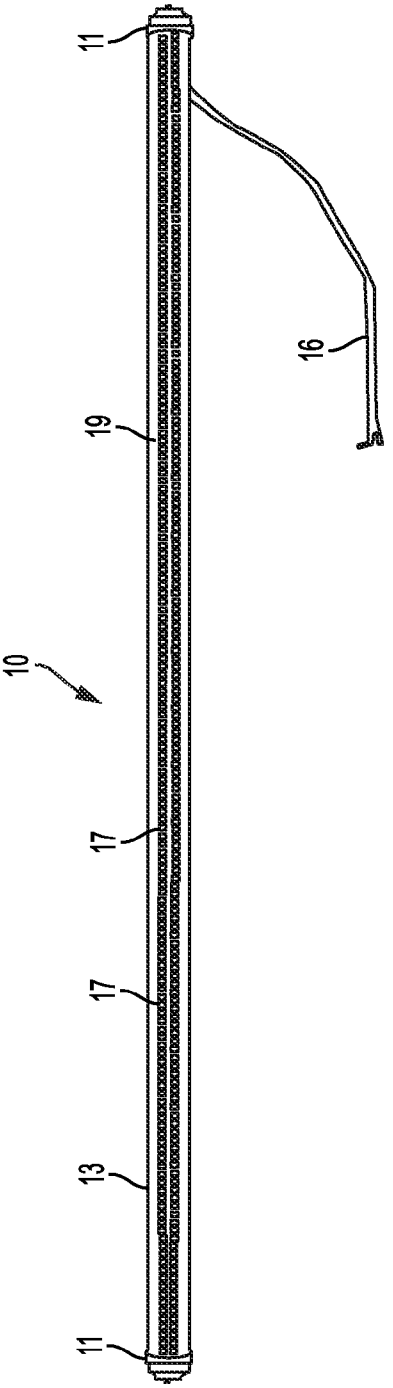

FIG. 6

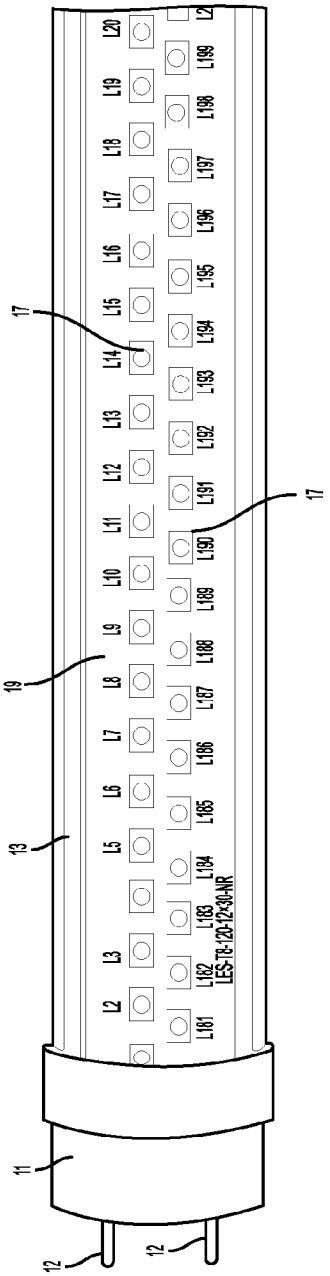
17
19
13
11
12
12
L2
L3
L5
L6
L7
L8
L9
L10
L11
L12
L13
L14
L15
L16
L17
L18
L19
L20
L181
L182
L183
L184
L185
L186
L187
L188
L189
L190
L191
L192
L193
L194
L195
L196
L197
L198
L199
LES-T8-120-12×30-NR

FIG. 7

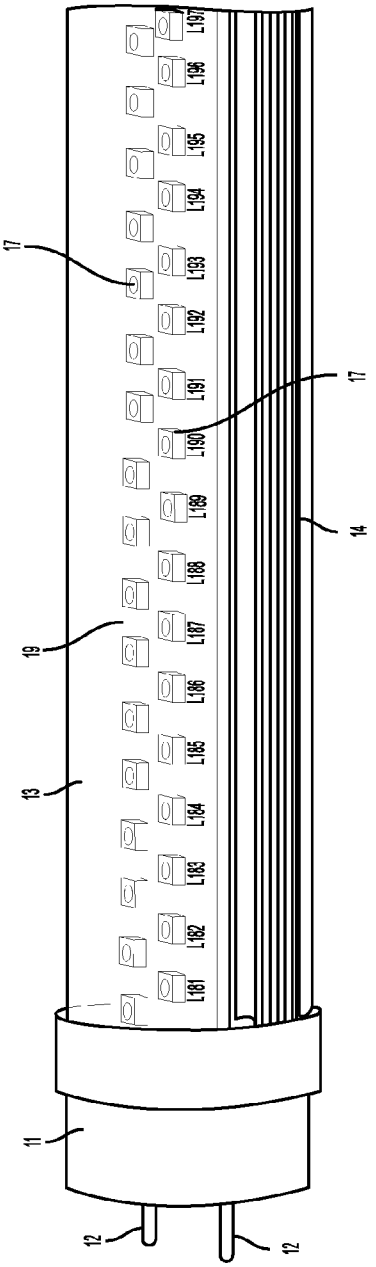
17
17
19
13
14
11
12
12
L181
L182
L183
L184
L185
L186
L187
L188
L189
L190
L191
L192
L193
L194
L195
L196
L197

FIG. 8

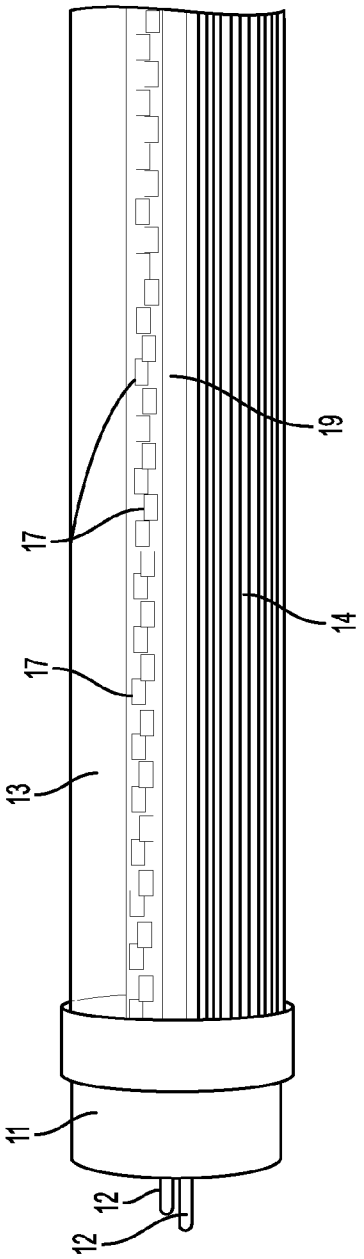

FIG. 9

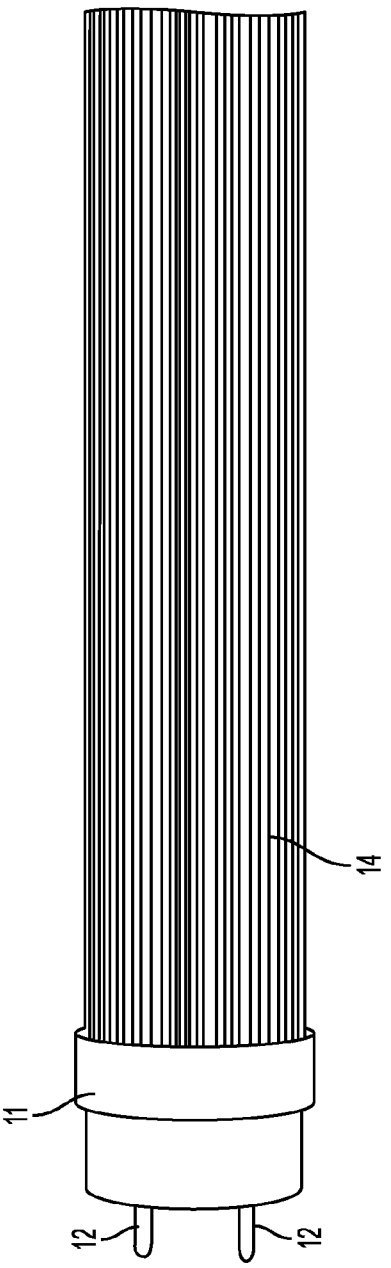

FIG. 10

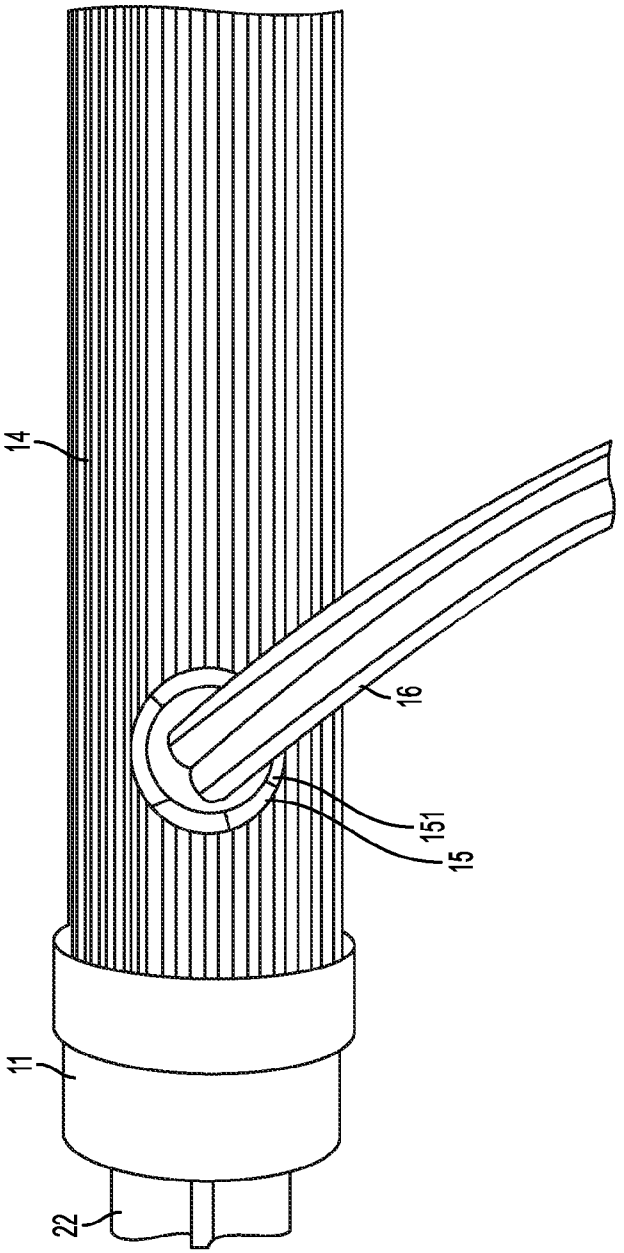

FIG. 11

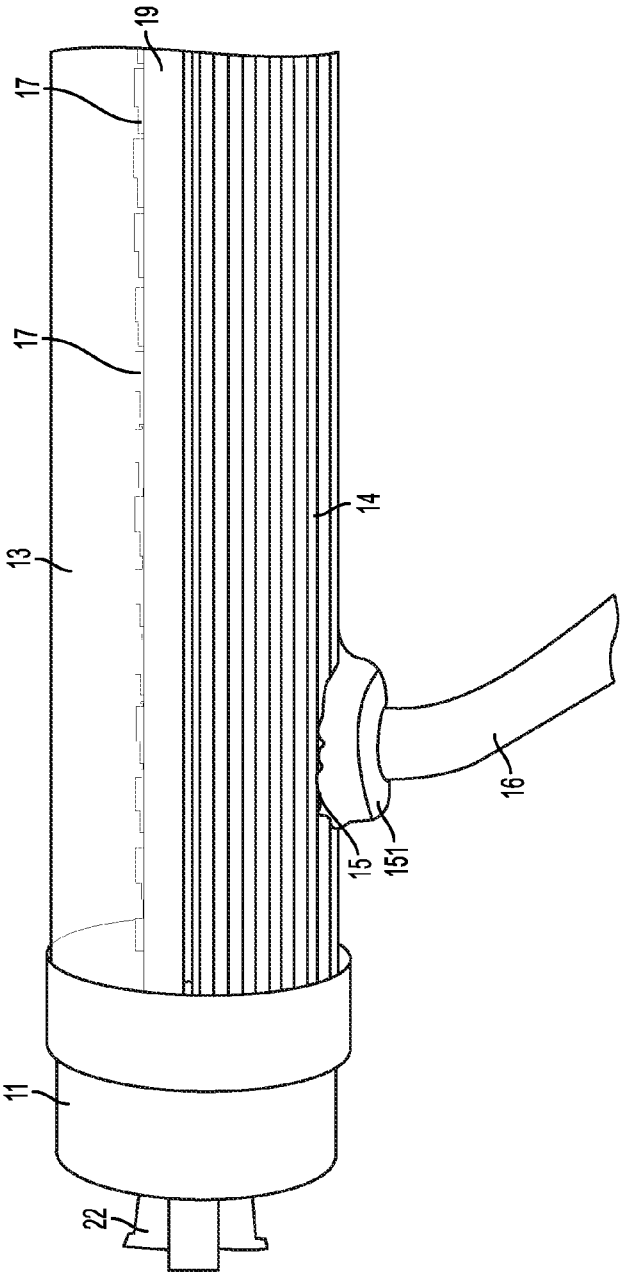

FIG. 12

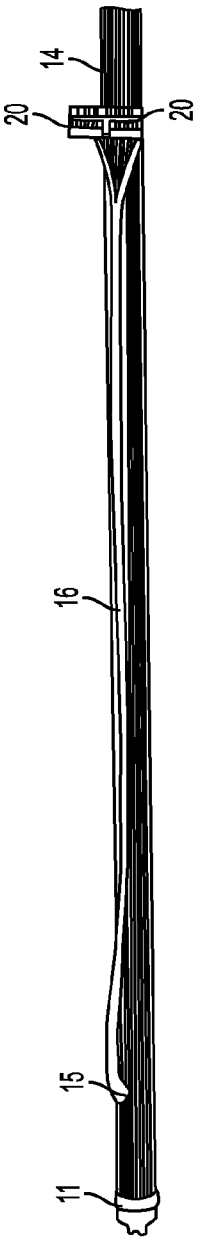

FIG. 13

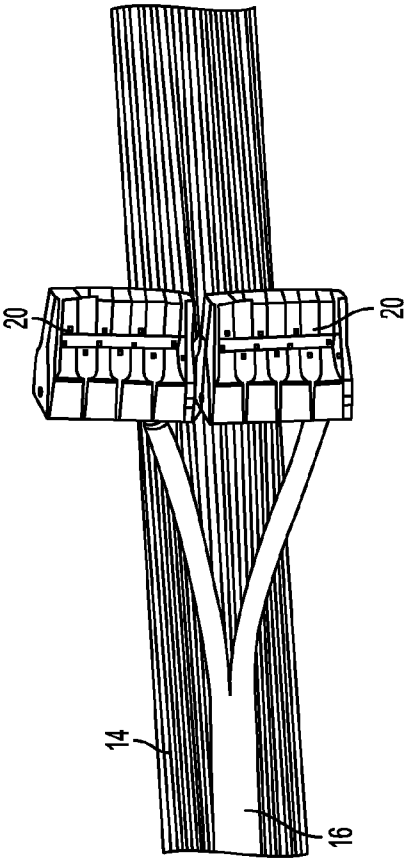

FIG. 14

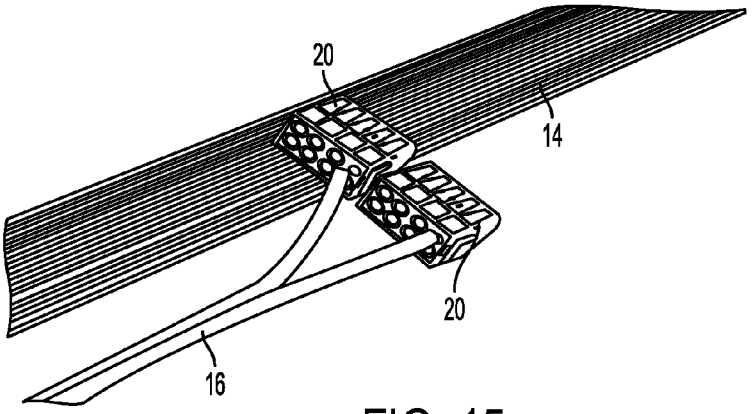

FIG. 15

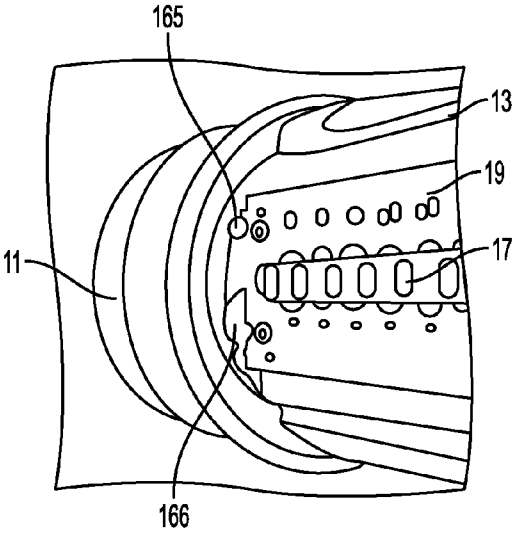

FIG. 16

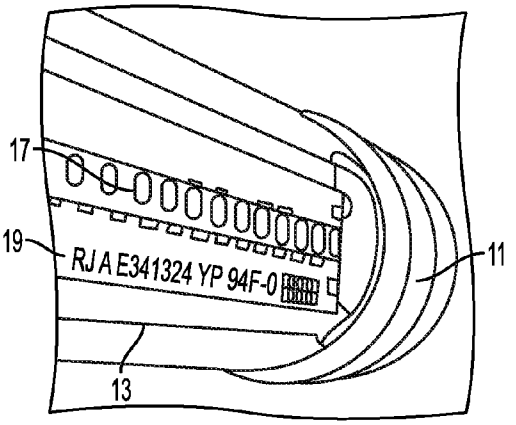

FIG. 17

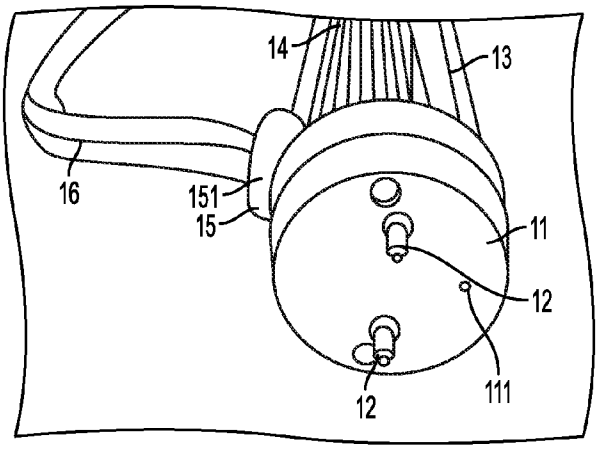

FIG. 18

LINEAR LED LAMP TUBE WITH INTERNAL DRIVER AND INTERCONNECT TO LINE VOLTAGE AND METHODS OF INSTALLING THE SAME

BACKGROUND

Progress in the field of engineering and manufacturing light emitting diodes (LEDs) has resulted in an increased interest in employing LED lamps in general lighting applications. Particularly, an interest exists in replacing fluorescent lamp tubes with LED lamp tubes. LED lamp tubes offer several advantages over traditional fluorescent lamp tubes. For example, LED lamps have a significantly longer life than fluorescent lamps and do not contain the dangerous chemicals that fluorescent lights depend upon for their fluorescence. Fluorescent and LED lamps, however, have different electrical requirements for the fixtures into which they will be installed.

Fluorescent lamp tubes generally have an end cap located at each end of the fluorescent lamp tube. Electrodes located on the end caps, commonly referred to as "pins," are used to electrically and mechanically connect the fluorescent tube lamp into the fixture. Having electrodes at both ends of the tube allows the electrical power to flow across (i.e., through) the lamp tube, causing the lamp tube to fluoresce. Thus, the fixture into which a fluorescent lamp tube is installed will maintain the first end of the tube as electrically positive and the second end of the tube as electrically negative.

LED lamps, on the other hand, require a low voltage source. Indeed, LEDs generally provided within LED lamps require a direct current (DC) voltage. Thus, LED lamps configured in this manner require driver circuitry which regulates the voltage passed to the LEDs. However, conventionally configured driver circuitry does not require the first end of the tube to be electrically positive and the second end to be electrically negative. As a result, a fixture designed for fluorescent lamp tubes may not be readily appropriate for use with LED lamp tubes, without some degree of modification, such as the non-limiting examples of replacing lamp holders, rewiring existing lamp holders, and the like, so as to convert the fixture for use with LED lamps. Notwithstanding the above, certain LED lamps may incorporate alternating current (AC) voltage components; however, modifications remain likewise necessary in that context, as with DC voltage sourced lamp tubes.

Because a huge number of fluorescent light fixtures are currently in use, converting and/or modifying each fixture, whether DC or AC sourced, in one or more of the manners described above would involve a considerable amount of effort and money. Therefore, if various advantages of LED lamp tubes over fluorescent lamp tubes are to be fully realized, a need exists for an LED lamp tube that can be readily installed and used with existing fluorescent light fixtures, without expensive modifications or replacement of the fixtures.

BRIEF SUMMARY

Generally described, various embodiments of the present invention comprise a linear wired LED lamp tube configured to replace a fluorescent lamp tube, such as the non-limiting examples of a T8 or T12 fluorescent lamp tube, or the like. The self-ballasted LED lamp tube of various embodiments comprises driver circuitry disposed within the tube, and pins configured to only mechanically connect to the light fixture. In this manner, the pins, according to various embodiments,

are electrically isolated from the electrical components of the lamp tube. Thus, the tombstones of a traditional fluorescent light fixture do not need to be modified to accommodate the LED lamp tube of the present invention. As a result, according to various embodiments, power may be supplied to the LED lamp tube via the non-limiting example of a set of wires protruding directly from the LED lamp tube that are connected directly to a branch wire circuit. In certain embodiments, the connection to the branch wire circuit may be made using a quick connect connector and/or with any approved wiring connection device, as may be desirable for particular applications.

In various embodiments, an LED lamp tube for placement in a fluorescent light fixture is provided wherein the LED lamp tube comprises: a substantially elongate member comprising a first end surface, a second end surface, and an intermediate surface substantially between the first and second end surfaces, the surfaces collectively defining an interior cavity of the elongate member; at least one light emitting diode (LED) positioned within the interior cavity and adjacent the intermediate surface; and a passage formed through at least a portion of the substantially elongate member, the passage being configured to receive there-through at least a first end of a set of electrical connecting wires.

In various embodiments, an LED lamp tube for placement in a fluorescent light fixture is provided wherein the LED lamp tube comprises: a substantially elongate member comprising a first end surface, a second end surface, and an intermediate surface substantially between the first and second end surfaces, the surfaces collectively defining an interior cavity of the elongate member; at least one light emitting diode (LED) positioned within the interior cavity and adjacent at least a portion of the intermediate surface; at least one driver circuit positioned within the interior cavity, the driver circuit comprising a set of electrical connecting wires and being configured to provide a controllable electrical current to the at least one LED; and a passage formed through at least a portion of the substantially elongate member, the passage being configured to receive there-through at least a portion of the set of electrical connecting wires.

In various embodiments, an LED lamp tube for placement in a fluorescent light fixture is provided wherein the LED lamp tube comprises: a substantially elongate member comprising a first end surface, a second end surface, and an intermediate surface substantially between the first and second end surfaces, the surfaces collectively defining an interior cavity of the elongate member; at least one light emitting diode (LED) positioned within the interior cavity and adjacent the intermediate surface; and at least one pin secured on each of the first and second end surfaces, wherein at least a portion of the pin is disposed external the interior cavity and configured to mount the LED lamp tube to the fluorescent light fixture such that the at least one pin is electrically isolated from the fluorescent light fixture

In various embodiments, an LED lamp tube for placement in a fluorescent light fixture is provided wherein the LED lamp tube comprises: a substantially elongate member comprising a first end surface, a second end surface, and an intermediate surface substantially between the first and second end surfaces, the surfaces collectively defining an interior cavity of the elongate member; at least one LED positioned within the interior cavity and adjacent at least a portion of the intermediate surface; and at least one driver circuit positioned within the interior cavity, the driver circuit comprising a set of electrical connecting wires and being configured to provide a controllable electrical current to at least one LED.

In various embodiments, an LED lamp tube for placement in a fluorescent light fixture is provided wherein the LED lamp tube comprises: a substantially elongate member comprising a first end surface, a second end surface, and an intermediate surface substantially between the first and second end surfaces, the surfaces collectively defining an interior cavity of the elongate member; at least one LED positioned within the interior cavity and adjacent the intermediate surface; at least one pin secured on each of the first and second end surfaces, wherein at least a portion of the pin is disposed external the interior cavity and configured to mount the LED lamp tube to the fluorescent light fixture such that the at least one pin is electrically isolated from the fluorescent light fixture.

In various embodiments, an LED lamp tube for placement in a fluorescent light fixture is provided wherein the LED lamp tube comprises: a substantially elongate member comprising a first end surface, a second end surface, and an intermediate surface substantially between the first and second end surfaces, the surfaces collectively defining an interior cavity of the elongate member; at least one LED positioned within the interior cavity and adjacent the intermediate surface; a passage formed through at least a portion of the substantially elongate member, the passage configured to receive there-through the set of electrical connecting wires; and a connector located external relative to the substantially elongate member, wherein a first end of the set of electrical connecting wires is secured in an appropriate position in the connector.

In various embodiments, a method of installing at least one LED lamp tube in a fluorescent light fixture is provided. In various such embodiments, the method comprises the steps of: (A) providing at least one LED lamp tube comprising: (1) a substantially elongate member comprising a first end surface, a second end surface, and an intermediate surface substantially between the first and second end surfaces, the surfaces collectively defining an interior cavity of the elongate member; (2) at least one light emitting diode (LED) positioned within the interior cavity and adjacent at least a portion of the intermediate surface; (3) at least one driver circuit positioned within the interior cavity, the driver circuit comprising a set of electrical connecting wires and being configured to provide a controllable electrical current to the at least one LED; (4) a passage formed through at least a portion of the substantially elongate member, the passage being configured to receive there-through a first end of the set of electrical connecting wires; and (5) at least one pin secured on each of the first and second end surfaces, wherein at least a portion of the pin is disposed external the interior cavity and electrically isolated from at least the at least one driver circuit; (B) mounting the at least one LED lamp tube into the fluorescent light fixture via the at least one pin such that the pin is further electrically isolated from the fluorescent light fixture; (C) electrically connecting the at least one internally positioned driver circuit to the fluorescent light fixture via the set of electrical connecting wires extending substantially through the passage.

BRIEF DESCRIPTION OF THE SEVERAL VIEWS OF THE DRAWING(S)

Having thus described various embodiments of the invention in general terms, reference will now be made to the accompanying drawings, which are not necessarily drawn to scale, and wherein:

FIG. **1** is a side view according to various embodiments of the LED lamp tube;

FIG. **2** is a cross-sectional view according to various embodiments of the LED lamp tube;

FIG. **3** is a partial front view of two LED lamp tubes according to various embodiments, as installed in a light fixture;

FIG. **4** is a partial side view of an LED lamp tube according to various embodiments, as installed in a light fixture;

FIG. **5** is a schematic wiring diagram of an LED lamp tube according to various embodiments in electrical connection to line voltage;

FIG. **6** is a top view of an LED lamp tube according to various embodiments of the present invention;

FIG. **7** is a close up top view of one end of an LED lamp tube according to various embodiments of the present invention;

FIG. **8** is a perspective view of one end of an LED lamp tube according to various embodiments of the present invention;

FIG. **9** is a side view of one end of an LED lamp tube according to various embodiments of the present invention;

FIG. **10** is a bottom view of one end of an LED lamp tube, according to various embodiments of the present invention;

FIG. **11** is a back view of one end of an LED lamp tube, according to various embodiments of the present invention;

FIG. **12** is a side view of one end of an LED lamp tube, according to various embodiments of the present invention;

FIG. **13** is a perspective view of an LED lamp tube with electrical connecting wires inserted into a WAGO 773 style quick connect connector, according to various embodiments of the present invention;

FIG. **14** is a closer side view of the quick connect connector, which is secured to the ends of electrical connecting wires, according to various embodiments of the present invention;

FIG. **15** is a perspective view of the electrical connecting wires inserted into a quick connect connector, according to various embodiments of the present invention;

FIG. **16** is a perspective top view of a first end of an LED lamp tube according to various embodiments of the present invention;

FIG. **17** is a perspective top view of a second end of an LED lamp tube, according to various embodiments of the present invention; and

FIG. **18** is an end view of one end of an LED lamp tube, according to various embodiments of the present invention

DETAILED DESCRIPTION

Various embodiments of the present invention now will be described more fully hereinafter with reference to the accompanying drawings, in which some, but not all embodiments are shown. Indeed, the invention may be embodied in many different forms and should not be construed as limited to the various embodiments set forth herein; rather, the embodiments described herein are provided so that this disclosure will satisfy applicable legal requirements. Like numbers refer to like elements throughout.

A. Structural Features of Various Embodiments

FIGS. **1** and **6** show side-views of various embodiments of the LED lamp tube **10**. FIGS. **7-10** show other perspectives views of various embodiments of the LED lamp tube **10**. With reference specifically to FIG. **1**, in various embodiments, the body of the lamp tube **10** comprises a lens **13**, a back cover **14**, and at least one end cap **11**, wherein one end cap may cap off each end of the body of the lamp tube **10**. In these embodiments, the lens **13**, back cover **14**, and end caps **11** enclose the

electrical circuitry and the LEDs **17** substantially within an internally defined cavity, thus protecting them from moisture, debris, and tampering.

In various embodiments, the LED lamp tube **10** may referred to interchangeably as comprising a substantially elongate member that may itself comprise at least an intermediate surface located substantially between a first end surface and a second end surface. In such embodiments, the intermediate surface may comprise the lens **13** and the back cover **14**, as will be described in further detail below. The first and second end surfaces may likewise comprise the at least one end cap **11** in certain embodiments, while in other embodiments the first and second end surfaces may comprise the end caps **11** and one or more pins, as will be described in further detail later herein. In any of these and still other embodiments, it should be understood that the substantially elongate member of the LED lamp tube **10** is configured so as to enclose the electrical circuitry and the LEDs **17** substantially within an internally defined cavity, thus protecting them from moisture, debris, and tampering.

1. Lens **13**

Remaining with FIG. **1**, it should be understood that the lens **13** may be configured such that at least some portion of the light emitted by the LEDs **17** can pass through the lens **13**. For example, in various embodiments, the lens **13** may be configured such that at least 10% of the light emitted by the LEDs **17** can pass through the lens **13**. In some embodiments, the lens **13** may be configured such that a significant fraction of the light emitted by the LEDs **17** can pass through the lens **13**. For example, in certain various embodiments, the lens **13** may be configured to permit 10-30%, 30-50%, or 60-80% of the light emitted by the LEDs **17** to pass through the lens **13**. In some embodiments, the lens **13** may be configured to permit at least 50% of the light emitted by the LEDs **17** to pass through the lens **13**. In certain embodiments, the lens **13** may be configured such that substantially all of the light emitted by the LEDs **17** may pass through the lens **13**. For example, in some embodiments, the lens **13** may be configured to permit more than 80%, or in certain embodiments, more than 90%, of the light emitted by the LEDs **17** to pass through lens **13**.

In various embodiments, the lens **13** may be made from a polymerized material, as commonly known and understood in the art. In certain embodiments, the lens **13** may be made of plastic. In some embodiments, the lens **13** may be made of an opaque material; however, in other embodiments, the lens **13** may be made of any of a variety of translucent or semi-translucent materials, as may be commonly known and used in the art. Still further, according to other embodiments, the lens **13** may be clear or frosted. In at least one embodiment, the lens **13** may be made of Smart Glass, or some other material that can transition from clear to frosted and/or vice versa. In yet other embodiments, the lens **13** may be tinted with various colors. For example, in at least one embodiment, the lens **13** may be tinted blue to give the light emitted by the lamp a blue glow. Indeed, it should be understood that the lens **13** may be made from any of a variety of materials, as may be commonly known and used and readily available in the art, provided such possess the light transmission characteristics that are desirable for particular applications.

In various embodiments, the translucent or semi-translucent material may permit passage of at least some portion of the light emitted by the LEDs **17** through the lens **13**. In certain embodiments, the translucent or semi-translucent material may allow passage of at least 10% of the light emitted by the LEDs **17** to pass through the lens **13**. In at least one embodiment, the translucent or semi-translucent material may permit passage of 10-30% of the light emitted by the LEDs **17** to pass through the lens **13**. In other certain embodiments, the translucent or semi-translucent material may be configured to permit passage of 30-50% of the light emitted by the LEDs **17** to pass through the lens **13**. In still other embodiments the translucent or semi-translucent material may permit passage of more than 50%, or, in certain various embodiments, more than 80%, of the light emitted by the LEDs **17** to pass through lens **13**. Alternatively, the translucent or semi-translucent material may permit passage of 60-80% of the light emitted by LEDs **17** to pass through the lens **13**. Indeed, it should be understood that according to various embodiments, the lens **13** may be configured to permit at least some desired portion of the light emitted by the LEDs **17** to pass through the lens **13**, however as may be beneficial for particular applications.

In various embodiments, the cross-section of the lens **13** may be generally semi-circular. In certain embodiments, the cross-section of the lens **13** may be generally a portion of an ellipse. In other embodiments, the cross-section of the lens **13** may comprise a plurality of flat or curved edges that combine to comprise a generally semi-circular cross-section or a cross-section which is generally a portion of an ellipse. In still other embodiments, the cross-section of the lens **13** may not be generally circular or elliptical and may be generally rectangular or alternatively shaped.

It should be further understood that various embodiments, the LED lamp tube **10** may comprise a substantially elongate member that may comprise at least an intermediate surface located substantially between a first end surface and a second end surface. In such embodiments, at least a portion of the intermediate surface may comprise the lens **13**, as previously described herein. In these and still other embodiments, the intermediate surface may further comprise additional components other than the lens **13**, such as, for example, the back cover **14**, as will be described in further detail below.

2. Back Cover **14**

As shown in FIG. **1**, in various embodiments, the LED lamp tube **10** further comprises a back cover **14**. In various such embodiments, the cross-section of the back cover **14** may be generally semi-circular. In certain embodiments, the cross-section of the back cover **14** may be generally a portion of an ellipse. In other embodiments, the cross-section of the back cover **14** may comprise a plurality of flat or curved edges that combine to comprise a generally semi-circular cross-section or a cross-section which is generally a portion of an ellipse. In still other embodiments, the cross-section of the back cover **14** may not be generally circular or elliptical and may be generally rectangular or alternatively shaped.

In various embodiments, the back cover **14** and the lens **13** may be configured to provide, when combined, a circular cross-section or an elliptical cross-section. In certain embodiments, the when the back cover **14** and the lens **13** are combined, they may provide a cross-section wherein at least part of the cross-section comprises a plurality of flat or curved edges that combine to comprise a generally circular or elliptical cross-section. In at least one embodiment, the back cover **14** may comprise 30% of the circumference of the LED lamp tube **10**. In other embodiments, the back cover **14** may comprise 40% of the circumference of the LED lamp tube **10**. In still other embodiments, the back cover **14** may comprise at least 50% of the circumference of the LED lamp tube **10**. For example, in at least one embodiment, the back cover **14** may comprise 50% of the circumference of the LED lamp tube **10** and in at least one other embodiment the back cover **14** may comprise 60% of the circumference of the LED lamp tube **10**. All of the above notwithstanding, generally speaking, according to various embodiments, the back cover **14** and the lens **13**

are configured such that, when combined, they comprise approximately 100% of the circumference of the tube **10**.

The diameter of the circumference comprising the back cover **14** and the lens **13** may, in various embodiments, be approximately one inch. In other embodiments, the diameter may be in a range of approximately one-half an inch to approximately one inch. In at least one exemplary embodiment, the diameter may be 0.625 inches. In other embodiments, the diameter may be substantially greater than one inch, as may be desirable for particular applications. In still other embodiments, the diameter may be approximately 1.5 inches.

Remaining with FIG. **1**, in various embodiments, both the lens **13** and the back cover **14** may be substantially elongated so as to form a longitudinal axis of the tube **10**. For example, in some embodiments, the lens **13** and the back cover **14** may each be approximately 1, 2, or 3 feet long. In other embodiments the lens **13** and back cover **14** may each be approximately 4 feet long. In other embodiments, the lens **13** and back cover **14** may each be approximately 8 feet long. As will be appreciated, the lens **13** and back cover **14** may have any of a variety of other lengths in keeping with other various embodiments of the present invention. That being said, it should be understood that in any of these and still other embodiments, the lens **13** and back cover **14** will generally typically have approximately the same linear length, as may be desirable for particular applications. Of course, various modifications may exist, whereby the relative lengths of the lens **13** and the back cover **14** may not necessarily be substantially the same, as may be desirable for still other applications.

In various embodiments, the lens **13** and the back cover **14** may be positioned and retained relative to one another so as to provide a substantially fixed and rigid "tube" structure. In certain embodiments, the lens **13** and the back cover **14** may be configured to snap together. In other embodiments, the lens **13** and the back cover **14** may be glued together with an appropriate adhesive. In still other embodiments, the lens **13** and the back cover **14** may be held in place by the end caps **11**. It should be appreciated, however, that in any of these and still other embodiments, the lens **13** and back cover **14** may be held in place by any of a variety of alternative mechanisms and/or methods, as may be generally known and used in the art.

The back cover **14** may be made of plastic in some embodiments, but may be made of aluminum or other materials in other embodiments. In various embodiments, the back cover **14** may be configured to dissipate waste heat emitted by the LEDs **17** and or the driver circuitry **18**. In various embodiments, the back cover **14** may comprise a series of ridges along at least a part of the circumference of back cover **14**. In some such embodiments, the ridges may be less than 1 mm in height. In other such embodiments, the ridges may be at least 1 mm in height. In certain embodiments, the ridges may be less than 2 mm in height. In still other embodiments, the ridges may be no more than 5 mm in height. In some embodiments, the ridges may be configured to permit heat to dissipate out from the LED lamp tube **10**. In certain embodiments, the ridges may be configured to optimize the amount of heat which can be dissipated by the back cover **14**.

It should be understood that various embodiments, the LED lamp tube **10** may comprise a substantially elongate member that may comprise at least an intermediate surface located substantially between a first end surface and a second end surface. In such embodiments, the intermediate surface may comprise the lens **13** and the back cover **14**, as previously described herein. In other embodiments, the intermediate surface may comprise additional components other than the lens **13** and the back cover **14**. In at least one embodiment, approximately one half of the intermediate surface comprises the lens **13**, while the remaining approximate half comprises the back cover **14**, as has been described elsewhere herein.

3. End Cap **11**

As noted above and illustrated in FIG. **1**, in various embodiments, the LED lamp tube **10** may further comprise at least one end cap **11** disposed on an end of the body of the LED lamp tube **10**. In various embodiments, the LED lamp tube **10** may further comprise an end cap **11** disposed on each end the body of the LED lamp tube **10**. In various embodiments, the end caps **11** are generally circular in cross-section. In other embodiments, the end caps **11** may be generally elliptical in cross-section. In some embodiments, the cross-section of the end caps **11** may at least in part comprise a plurality of straight or curved edges which, when combined, comprise at least part of a generally circular or generally elliptical cross-section. In certain other embodiments, the cross-section of the end caps **11** may not be generally circular or elliptical and may be generally rectangular or alternatively shaped.

In various embodiments, some portion of the length of the lens **13** and the back cover **14** is inserted into each end cap **11**. In some embodiments, approximately 0.25 inches of the length of the lens **13** and the back cover **14** may be inserted into each end cap **11**. In other embodiments, 0.5-0.25 inches of the length of the lens **13** and the back cover **14** may be inserted into each end cap **11**. In still other embodiments, less than 0.25 inches of the length of the lens **13** and the back cover **14** may be inserted into each end cap **11**. In at least one embodiment, more than 0.5 inches of the length of the lens **13** and back cover **14** may be inserted into each end cap **11**.

In various embodiments, the diameter of an end cap **11** may be configured such that the lens **13** and the back cover **14** may be secured within the end cap **11**. Thus, in various embodiments, the inside diameter of the end cap may be substantially the same as the outside diameter of the lens **13** and the back cover **14**. As shown in FIG. **7**, in some embodiments, the end cap **11** may have a step profile wherein the portion of the end cap **11** into which a portion of the lens **13** and a portion of the back cover **14** are inserted is different from the portion of the end cap **11** that does not contain a portion of the lens **13** or back cover **14**. For example, the portion of the end cap **11** into which a portion of the lens **13** and a portion of the back cover **14** are inserted may have a larger diameter than the portion of the end cap **11** that does not contain a portion of the lens **13** or back cover **14**. In certain embodiments, the portion of the end cap **11** that does not contain a portion of the lens **13** or back cover **14** may have an outer diameter that is substantially the same as the outer diameter of the lens **13** and the back cover **14**.

The end caps **11** may be plastic in some embodiments, or other materials in other embodiments. In some embodiments, the end caps **11** may be secured to the LED lamp tube **10** via screws. In certain embodiments, the end caps **11** are secured to the reflective back plate **19** via screws or some other securing mechanism. In other embodiments, the end caps **11** maybe secured to the LED lamp tube **10** by other mechanisms.

As illustrated in FIG. **18**, in some embodiments, the at least one end cap **11** may comprise a small hole **111** on the end of the end cap **11**. In some such embodiments, the hole **111** is less than 1 mm in diameter. In other embodiments the hole **111** is 1-2 mm in diameter. In still other embodiments, the hole **111** is 2-3 mm in diameter. In various embodiments, the hole **111** acts to allow the pressure within the tube to maintain

a pressure substantially similar to the ambient air pressure. Other embodiments may not include a hole in the at least one end cap **11**. In some such embodiments, the pressure within the tube may be regulated by other mechanisms.

Returning to FIG. **1**, the pins **12** are located on the at least one end cap **11**. The pins **12** are used to mechanically connect the lamp tube to the lighting fixture, in various embodiments. The pins **12** are electrically isolated from the circuitry within the LED lamp tube **10**. FIG. **17** illustrates that the pins **12** secured to end cap **11**, are not in electrical contact with the circuitry of the LED lamp tube **10**.

In some embodiments, such as the illustrated embodiment of FIG. **1**, the pins **12** may be two cylindrical structures. In other embodiments, the pins **12** may be one structure. Other possible configurations of the pins **12** may be apparent to those skilled in the art to mechanically connect the LED lamp tube **10** to the lighting fixture. In various embodiments, the pins **12** may be configured for use in a T5, T8, T12, or similar lighting fixture.

In various embodiments, the pins **12** may be made of plastic or some other non-conductive material. In other embodiments, the pins **12** may be made of metal. The pins **12** may be made out of other materials in other embodiments.

During shipment or storage, the pin cover **22** may be used to protect the pins **12**, as illustrated in FIGS. **11-12**. As the pins **12** are used to mechanically secure the LED lamp tube **10** into a lighting fixture, and not used to electrically connect the LED lamp tube **10** to the lighting fixture, in various embodiments, pin cover **22** may be left on the pins **12** when LED lamp tube **10** is installed into a lighting fixture, if the lighting fixture will accommodate pin cover **22**.

It should be understood that various embodiments, the LED lamp tube **10** may comprise a substantially elongate member that may comprise a first end surface and a second end surface. In such embodiments, the first and second end surfaces may comprise at least the end caps **11**, as previously described herein. In other embodiments, the first and second end surfaces may be something other than or in addition to the end caps **11**. Indeed, in certain embodiments, the first and second end surfaces may comprise at least some combination of the end caps the back cover **14**, as previously described herein. However, in other embodiments, the second end surface may be something other than a back cover **14**.

4. Passage **15** and Snap-in **151**

Again returning to FIG. **1**, the LED lamp tube **10** may also comprise a passage **15**, in various embodiments. In some embodiments, the passage **15** may allow electrical connecting wires **16** to pass through the body of the LED lamp tube **10**. In some embodiments, the passage **15** may be generally circular or elliptical. In other embodiments, the passage **15** may be generally rectangular or alternatively configured.

As shown in FIG. **13**, in various embodiments, the passage **15** may be disposed within the back cover **14** of the LED lamp tube **10**. In some such embodiments, the passage **15** may be centered on the circumference of the back cover **14**. In other embodiments, the passage **15** may be offset from the center of the circumference of the back cover **14**. In some embodiments, the passage **15** may be disposed substantially near one end of the LED lamp tube **10**. For example, in at least one embodiment, the passage **15** maybe located within 6 inches of one end of a four foot long LED lamp tube **10**. In some embodiments, the passage **15** is disposed within 10% of the length of the LED tube lamp **10** from an end of an LED lamp tube **10**. In some such embodiments, the passage **15** may be located within 5% of the length of the LED lamp tube **10** from an end of the LED lamp tube **10**. In certain embodiments, the passage **15** is located substantially next to an end cap **11** disposed on an end of an LED lamp tube **10**. In other embodiments, however, it should be understood that the passage may be a knockout or a hole drilled through a tombstone **5** or other component of the lighting fixture, as may be desirable for particular applications and as will be described in further detail below.

In various embodiments, the passage **15** acts to at least partially seal the tube body around the electrical connecting wires **16** such that moisture and/or debris may not be able to enter the body of the tube. In some such embodiments, an insert member or snap-in **151** may be disposed within the passage **15**, as shown in FIGS. **11-13**. In some embodiments, the snap-in **151** may be secured into the passage **15** with an appropriate attachment mechanism, such as the non-limiting examples of adhesives, Velcro, glue, or the like. In other embodiments, the snap-in may be formed from a rubber material and secured in passage **15** through other appropriate mechanisms, such as a press fit or other mechanisms. In some embodiments, snap-in **151** is secured into the passage **15** such that the snap-in **151** is selectively removable. In other embodiments, the snap-in **151** may be permanently secured into passage **15**. In other embodiments, mechanisms other than a snap-in may be utilized to at least partially seal the tube body around the electrical connecting wires **16** that pass through the passage **15**.

As shown in FIG. **11**, in various embodiments, the snap-in **151** may comprise flanges on the inside and or outside of the LED lamp tube **10** that act to at least partially seal the LED lamp tube **10** around the electrical connecting wires **16**. In some embodiments, the snap-in **151** may comprise a moveable sealing member that may be adjusted to at least partially seal the LED lamp tube **10** around the electrical connecting wires **16** and then locked into place. In other embodiments, the snap-in **151** may be configured to seal the LED lamp tube **10** around the electrical connecting wires **16** by another mechanism. In certain embodiments, the snap-in **151** substantially seals the LED lamp tube **10** around the electrical connecting wires **16**. In various embodiments, the snap-in **151** may be made of rubber. In other embodiments, other materials may be used to make the snap-in **151**.

In various embodiments, the snap-in **151** is generally circular or elliptical. In other embodiments, the snap-in **151** may be generally rectangular or alternatively shaped. In various embodiments, the snap-in **151** is approximately a 0.5 inches in diameter. In other embodiments the snap-in **151** may be 0.25 to 0.5 inches in diameter. In certain embodiments, the snap-in **151** may be more than 0.5 inches or less than 0.25 inches in diameter.

In some embodiments, the electrical connecting wires **16** may pass through a hole disposed in the central region of snap-in **151**. In other embodiments, the electrical connecting wires **16** may pass through a portion of passage **15** and at least some of the remaining portion of passage **15** may be filled by snap-in **151** or some other appropriate mechanism.

5. Connecting Wires **16**

As shown in FIG. **4**, the electrical connecting wires **16** may be comprised of two or more wires, in various embodiments. In some embodiments, the electrical connecting wires **16** may be wrapped such that they form a single cable, as is well understood in the art. In some embodiments, the wires may be stranded wires. In other embodiments, other types of wire may be used. In some embodiments, 1-1.5 feet of the electrical connecting wires **16** may be disposed outside of the LED lamp tube **10**. In other embodiments 0.5-1.25 feet of the electrical connecting wires **16** may be disposed outside of the LED lamp tube **10**. In still other embodiments, 1.25-2 feet of the electrical connecting wires **16** may be disposed outside of

the LED lamp tube **10**. In certain embodiments, more than 2 feet of the electrical connecting wires **16** may be disposed outside of the LED lamp tube **10**. In certain other embodiments, less than 0.5 feet of the electrical connecting wires **16** may be disposed outside the LED lamp tube **10** as long as enough wire is provided to electrically connect the electrical connecting wires **16** to the line voltage wires **6**.

As schematically shown in FIG. **5**, in various embodiments, the first end of each of the electrical connecting wires **16** is connected to the driver circuitry **18**, which is described below. In various embodiments, the second end of the electrical connecting wires **16** may be stripped and may be tin coated. As shown in FIGS. **13-15**, in various embodiments, the second end of the electrical connecting wires **16** are connected to a quick connect connector, or some other style quick connect connector **20**, which may then be used to connect the electrical connecting wires **16** to line voltage wires **6**. The quick connect connector **20** used in some embodiments, may be one of several types of quick connect connectors sold by WAGO. In other embodiments, the second end of the electrical wires **16** are configured to be inserted into a quick connect connector **20**, which may then be used to connect electrical connecting wires **16** to line voltage wires **6**. FIG. **6** illustrates at least one embodiment where the ends of electrical connecting wires **16** have been stripped and are configured to be inserted into a WAGO connector. In still other embodiments, the second end of the electrical connecting wires **16** are configured to be connected to line voltage in some other manner. Thus, the electrical connecting wires **16** connect the electrical circuitry of the LED lamp tube **10** to line voltage.

6. Light Emitting Diode (LED) **17**

Returning to FIG. **1**, LED lamp tube **10** also comprises at least one light emitting diode (LED) **17**. In various embodiments, LED lamp tube **10** comprises 360 or more LEDs **17**. In different embodiments, the LEDs **17** may have different wattages and/or different color temperatures. In various embodiments, the one or more LEDs **17** may be placed such that they create a single line down the middle of the lamp tube. In other embodiments, the one or more LEDs **17** may be placed in various configurations within the lamp tube. One non-limiting example is that the LEDs **17** may be arranged in two lines which are offset from each other, such as illustrated in FIG. **7**. Also, various embodiments of the LED lamp tube **10** may employ LEDs **17** that emit different levels of illumination at different color temperatures. The number of LEDs **17** used may also be utilized to determine the level of illumination emitted by the lamp tube **10**.

The LEDs are mounted on reflective back plate **19** by any of various methods generally known and understood in art. As shown in FIG. **2**, in various embodiments, reflective back plate **19** may be disposed along a diameter of the cross-section of LED lamp tube **10**. Thus, in certain embodiments, reflective back plate **19** may divide the tube into two chambers of nearly equal volume. In other embodiments, the two chambers may not have nearly equal volumes. In various embodiments, the reflective back plate **19** additionally permits the wiring of the LED lamp tube **10** to be hidden from the view of the user, providing a more aesthetically pleasing lamp tube.

As illustrated in FIG. **6**, in various embodiments, the surface of reflective back plate **19** upon which the LEDs **17** are mounted may be coated with a reflective material or coating, ensuring that a significant fraction of the light emitted by the LEDs **17** is transmitted through lens **13**, by minimizing the light absorbed by reflective back plate **19**. Thus, in various embodiments, at least a portion of the light that may be emitted by the LEDs **17** toward the reflective back plate **19** or that has reflected off the inside surface of lens **13** back toward the reflective back plate **19** may be reflected off reflective back plate **19** toward lens **13**. In other embodiments, the reflective back plate **19** may be configured such that a significant fraction of the light incident upon the reflective back plate **19** is reflected toward the lens **13**. In certain embodiments, the reflective back plate **19** may be configured such that substantially all of the light incident upon the reflective back plate **19** is reflected toward the lens **13**.

7. Driver Circuitry **18**

As illustrated in FIG. **2**, driver circuitry **18** is disposed within the body of LED lamp tube **10**. In various embodiments, the driver circuitry **18** may comprise a circuit portion configured to convert the input alternating current (AC) line voltage to a direct current (DC) voltage. In various embodiments, the driver circuitry **18** may comprise a circuit portion configured to control the current being applied to the LEDs **17**. The driver circuitry **18**, in various embodiments, may further comprise a circuit portion configured to allow a user to adjust the brightness of the light emitted from the LED lamp tube **10** through the use of a dimmer switch. These circuitry portions are commonly known and understood in the art, and thus will not be described in detail herein. In various embodiments, the driver circuitry **18** may include other circuitry portions and/or the circuitry portions described herein may not be distinct circuitry portions. For example, in some embodiments, the circuitry portion that converts the AC line voltage to a DC voltage may also control the current being applied to the LEDs **17**.

In various embodiments, the driver circuitry **18** is disposed within the chamber defined by the back cover **14** and reflective back plate **19**. In some embodiments, the driver circuitry may be mounted on the back cover **14**, as shown in FIG. **2**. In other embodiments, the driver circuitry may be mounted on the reflective back plate **19**. In still other embodiments, the driver circuitry may be mounted in an end cap **11** disposed on an end of LED tube lamp **10**. In certain embodiments, some components of the driver circuitry **18** may be mounted to the reflective back plate **19** while other components of the driver circuitry **18** may be mounted to the back cover **14**. In some embodiments, driver circuitry is located on one end of the LED lamp tube **10**, possibly the same end of LED lamp tube **10** as the passage **15**. In other embodiments, driver circuitry **18** may be centered along the length of LED lamp tube **10** or in some other location within the LED lamp tube **10**.

FIG. **3** illustrates two LED lamp tubes **10** installed into an existing fluorescent light fixture. The pins **12** may mechanically connect the LED lamp tubes **10** to the tombstones **5** of the light fixture. However, in the illustrated embodiment, the pins **12** do not electrically connect the driver circuitry **18** to the tombstones **5**. Thus, electrical connecting wires **16** pass through the passage **15** in each of the bodies of the LED lamp tubes **10**. In various embodiments, the electrical connecting wires **16** may be passed through a knock-out in the tombstone **5** and then connected to line voltage wires **6**. In certain embodiments, the knock-out may be created by drilling a hole through the tombstone **5** or other component of the lighting fixture, if such does not previously exist.

As illustrated in FIG. **3**, lighting fixtures configured for lamp tubes tend to be designed to hold more than one lamp tube. In various embodiments, the plurality of LED lamp tubes **10** installed in a lighting fixture may be wired independently of each other, at least in part because the driver circuitry **18** is mounted inside the LED tube lamp **10**. Thus, in various such embodiments, each LED tube lamp **10** may be controlled by the driver circuitry **18** mounted within the LED tube lamp **10**. Therefore, each LED tube lamp **10** may be

controlled independently of the other LED tube lamps **10** mounted within the same lighting fixture.

8. Connector **20**

As shown in FIG. **4**, the electrical connecting wires **16** may be attached to one or more quick connect connectors **20**. In some embodiments, quick connect connector **20** is configured to receive line voltage wires **6**. In other embodiments, line voltage wires **6**, may be connected to a quick connect connector **20** which is configured to receive electrical connecting wires **16**. In various embodiments, quick connect connectors **20** are configured to easily and securely electrically connect electrical connecting wires **16** with line voltage wires **6**. In some embodiments, quick connect connector **20** may be a WAGO 773 style quick connect connector. In other embodiments, quick connect connector **20** may be a different style quick connect connector. The positive and negative electrical connecting wires **16** may be electrically connected to the positive and negative line voltage wires **6**, respectively, using one or more quick connect connectors **20**. The use of quick connect connector **20** in various embodiments simplifies the installation of LED lamp tube **10** into a lighting fixture, as will be described in further detail herein below

FIG. **5** provides a schematic representation of the wiring of an installed LED lamp tube **10**. Electrical power is provided by a first line voltage wire **61**. A first electrical connection between the first line voltage wire **61** and the first electrical connection wire **161** is made using a first quick connect connector **201**. The first electrical connection wire **161** provides power to the driver circuitry **18**. The output of the driver circuitry **18** is fed to one or more LEDs **17** which may be connected in series or in parallel. The LEDs **17** the use the electrical power to emit light. The electrical circuit is closed through a second electrical connection wire **162** which is in electrical connection with the second line voltage wire **62** via the second quick connect connector **202**. The first quick connect connector **201** and the second quick connect connector **202** may be different bays of quick connect connector **20** or may be two different quick connect connectors **20**. FIG. **5** is provided to merely illustrate the basic concept of how the installed LED lamp tube **10** is powered. Additional circuitry and wiring not discussed here may be employed in the LED tube lamp **10** in keeping with the present invention.

FIG. **16** shows how the driver circuitry **18** is electrically connected to the LEDs **17**. Positive interior electrical wire **165** is visible coming up from the chamber defined by the back cover **14** and the reflective back plate **19** and soldered onto an electrical contact point on reflective back plate **19**. Positive interior electrical wire **165** is colored red and, on the reflective back plate **19**, is marked "+V" in this embodiment. Thus, in this embodiment, positive interior electrical wire **165** electrically connects the driver circuitry **18** to the LEDs **17**. Negative interior wire **166** is also visible coming up from the chamber defined by the back cover **14** and the reflective back plate **19** and is soldered onto an electrical contact point on reflective back plate **19**. In this embodiment, negative interior wire **166** is colored black and is labeled, on the reflective back plate **19**, as "−V". Thus, in this embodiment, negative interior electrical wire **166** electrically connects the LEDs to the second electrical connection wire **162** so that the electrical circuit can be completed.

Various embodiments of LED lamp tube **10** are configured to satisfy various safety standards such as UL Standards and other relevant standards. For example, various embodiments of the LED lamp tube **10** satisfy UL 1598C standards. Other embodiments of the LED lamp tube **10** may satisfy other relevant safety standards.

Exemplary Methods of Installing Various Embodiments

The process of installing an LED lamp tube **10** into a lighting fixture will be detailed below. Various embodiments of an LED lamp tube **10** may be installed into a variety of lighting fixtures commonly known and understood in the art for use with various lamp tubes. The process detailed below is especially relevant to the installation of an LED lamp tube **10** in an existing fluorescent lamp tube lighting fixture, as illustrated in FIGS. **3** and **4**.

In various embodiments, to install an LED lamp tube **10** into a lighting fixture, user may remove any cover present on the lighting fixture. The user may then remove any lamp tubes present in the lighting fixture that the user wishes to replace with an LED tube lamp **10**. In various embodiments, a cover may not be present on the lighting fixture and/or there may not be a lamp tube present in the lighting fixture in the position in which the user wishes to install the LED tube lamp **10**.

In various embodiments, the user may remove the pin protectors **22**, if present, from the pins **12**. The user may then insert the pins **12** of the LED lamp tube **10** into the tombstones **5** of the lighting fixture or other lighting fixture component configured to receive the pins **12**, using any of a variety of appropriate methods commonly known for installing a fluorescent lamp tube into a lighting fixture.

The user may pass through electrical connecting wires **16** through a punch out in tombstone **5**, in various embodiments. In other embodiments, the electrical connecting wires **16** may be passed through a knock out or passage to the back of the lighting fixture. In still other embodiments, a hole may be drilled through tombstone **5** in order to create a knockout or a passage through which electrical connecting wires **16** maybe be passed. In yet other embodiments, the electrical connecting wires **16** need not be passed through to the back of the lighting fixture. In some embodiments, a user may pass through the electrical connection wires **16** through a knock out or passage before inserting the pins **12** into the tombstones **5** or other pin receiving component.

Next, the user may connect the electrical connecting wires **16** to line voltage wires **6**. In various embodiments, this step may be completed by inserting and securing the ends of the electrical connecting wires **16** into the appropriate positions on one or more quick connect connectors **20**. In some embodiments, the electrical connecting wires **16** may already be secured into a quick connect connector **20**. In various embodiments, the user may now insert and secure the line voltage wires **6** into the appropriate positions on the one or more quick connect connectors **20**. In some embodiments, the line voltage wires **6** may already be secured in one or more quick connect connectors **20**.

Once the electrical connection has been completed, the user may choose to replace another lamp tube in the same lighting fixture. If so, the user would repeat the relevant steps detailed above. Once the user has completed installing the LED lamp tubes **10** that the user wishes to install into the lighting fixture, the user may replace any cover removed from the lighting fixture.

In various embodiments, a user may wish to install two or more LED lamp tubes **10** in series. If one of the LED lamp tubes **10** becomes non-operational, the remaining LED lamp tubes **10** may not be affected because each LED lamp tube **10** is controlled by its own driver circuitry **18**. In various such embodiments, the user would complete steps similar to those detailed above to install the plurality of LED lamp tubes **10**.

Remaining with FIGS. **3** and **4**, to install a plurality of LED lamp tubes **10** in series, according to various embodiments, the user would again remove any cover from the lighting fixture and remove any lamp tubes that the user wishes to

replace with LED lamp tubes **10**. The user would then remove any pin covers **22** that may be present. The user may then insert the pins of the first LED lamp tube **10** into the tombstones **5** or other pin receiving component of the lighting fixture. The user may then pass the electrical connection wires **16** through a knockout, passage, or hold drilled through the tombstone **5** or other component of the lighting fixture. The electrical connection wires **16** may then be connected to the line voltage wires **6**. In various embodiments, the electrical connection may be made by inserting and securing the electrical connection wires **16** and/or the line voltage wires **6** into one or more quick connect connectors **20**.

In various embodiments, the user would then insert the pins of the second LED lamp tube **10** into the tombstones **5** or other pin receiving component of the lighting fixture. The user may then pass the second electrical connection wires **16** through a knockout, passage, or a hole drilled through tombstone **5** or other component of the lighting fixture. The electrical connection wires **16** may then be connected to the line voltage wires **6**. In various embodiments, the electrical connection may be made by inserting and securing the electrical connection wires **16** and/or the line voltage wires **6** into one or more quick connect connectors **20**. These steps may be repeated until the user has installed the plurality LED lamp tubes **10**.

In various embodiments, the user may elect to mechanically connect the plurality of LED lamp tubes **10** to the lighting fixture and then electrically connect the plurality of LED lamp tubes to the line voltage wires **6**. In other embodiments, the user may elect to electrically connect the plurality of LED lamp tubes **10** to the lighting fixture and then mechanically connect the plurality of LED lamp tubes **10** to the lighting fixture.

In various embodiments, one quick connect connector **20** may be used to at least in part electrically connect more than one LED lamp tube **10** to the line voltage wires **6**. As illustrated in FIG. **15**, a quick connect connector **20** may be configured to connect one or more LED lamp tubes **10** to line voltage wires **6**, via the electrical connecting wires **16**.

CONCLUSION

Many modifications and other embodiments of the invention set forth herein will come to mind to one skilled in the art to which this invention pertains having the benefit of the teachings presented in the foregoing descriptions and the associated drawings. Therefore, it is to be understood that the invention is not to be limited to the specific embodiments disclosed and that modifications and other embodiments are intended to be included within the scope of the appended claims. Although specific terms are employed herein, they are used in a generic and descriptive sense only and not for purposes of limitation.

The invention claimed is:

1. A light emitting diode (LED) lamp tube for placement in a fluorescent light fixture, said tube comprising:

a substantially elongate member comprising a first end surface, a second end surface, and an intermediate surface substantially between said first and second end surfaces, said surfaces collectively defining an interior face and an exterior face of said elongate member, said exterior face being oppositely oriented relative to said interior face, said interior face further defining an interior cavity of said elongate member;

at least one light emitting diode (LED) positioned within said interior cavity and adjacent said intermediate surface; and

a passage formed through at least a portion of said substantially elongate member, said passage defining an opening through both said interior face and said exterior face of said substantially elongate member; and

a set of continuous electrical connecting wires, said set of continuous electrical connecting wires having a first end and second end with the set of electrical connecting wires extending continuously there-between,

wherein:

said first end is disposed within said interior cavity and places the electrical connecting wires in electrical communication with said at least one LED,

said second end is disposed outside of said interior cavity and places the electrical connecting wires in electrical communication with line voltage, and

an intermediate portion of said electrical connecting wires passes through said passage.

2. The LED lamp tube of claim **1**, further comprising a connector located external relative to said substantially elongate member, wherein said first end of said set of electrical connecting wires is secured in an appropriate position in said connector.

3. The LED lamp tube of claim **2**, wherein said external connector is a quick-connect configured connector.

4. The LED lamp tube of claim **2**, wherein said external connector is a WAGO connector.

5. The LED lamp tube of claim **2**, wherein said external connector is configured to directly connect said first end of said set of electrical connecting wires to a branch wire circuit providing power to said LED lamp tube.

6. The LED lamp tube of claim **2**, further comprising at least one driver circuit disposed within said interior cavity of said elongate member, said driver circuit being operatively connected to a second end of said set of electrical connecting wires and being configured to provide a controllable electrical current to said at least one LED via said connector.

7. The LED lamp tube of claim **1**, wherein said passage is located substantially adjacent one end of said intermediate surface.

8. The LED lamp tube of claim **1**, wherein said passage is located substantially adjacent at least one of said first end surface and said second end surface.

9. The LED lamp tube of claim **1**, further comprising at least one pin secured on each of said first and second end surfaces, wherein at least a portion of said pin is disposed external said interior cavity and configured to mount said LED lamp tube to said fluorescent light fixture such that said at least one pin is electrically isolated from said fluorescent light fixture.

10. The LED lamp tube of claim **9**, wherein said first and said second end surfaces comprise corresponding first and second end caps, and wherein said at least one pin is secured on at least one of said first and second end caps.

11. The LED lamp tube of claim **10**, wherein said at least one pin is configured for use with at least one of a T8 and a T12 lighting fixture.

12. The LED lamp tube of claim **9**, further comprising at least one driver circuit disposed within said interior cavity of said elongate member, said driver circuit being operatively connected to a second end of a set of electrical connecting wires and being configured to provide a controllable electrical current to said at least one LED.

13. The LED lamp tube of claim **12**, wherein said at least one pin is further electrically isolated from said at least one driver circuit.

14. The LED lamp tube of claim 13, wherein:

said intermediate surface comprises a lens portion and a back cover portion, said lens and back cover portions forming there between said interior cavity of said LED lamp tube;

said passage is formed through a portion of said intermediate surface that is substantially adjacent said back cover portion; and

said at least one LED is positioned within said interior cavity substantially adjacent said lens portion.

15. A light emitting diode (LED) lamp tube for placement in a fluorescent light fixture, said tube comprising:

a substantially elongate member comprising a first end surface, a second end surface, and an intermediate surface substantially between said first and second end surfaces, said surfaces collectively defining an interior cavity of said elongate member;

at least one light emitting diode (LED) positioned within said interior cavity and adjacent at least a portion of said intermediate surface;

at least one driver circuit positioned wholly within said interior cavity, said driver circuit comprising at least a first end of a set of continuous electrical connecting wires and being configured to provide a controllable electrical current to said at least one LED; and

a passage formed through at least a portion of said substantially elongate member, said passage defining an opening through said substantially elongate member,

wherein:

said set of continuous electrical connecting wires and a second end of said set of continuous electrical wires are disposed outside of said interior cavity and configured to connect to line voltage; and

an intermediate portion of said continuous electrical connecting wires passes through said passage.

16. The LED lamp tube of claim 15, wherein said passage is located substantially adjacent one end of said intermediate surface.

17. The LED lamp tube of claim 15, wherein said passage is located substantially adjacent at least one of said first end surface and said second end surface.

18. The LED lamp tube of claim 15, further comprising an insert member disposed in said passage, said insert member being configured to receive and retain there-through said set of electrical connecting wires.

19. The LED lamp tube of claim 18, wherein said insert member is a rubber snap-in secured within said passage via at least one of an adhesive material, a Velcro material, and a press fit engagement.

20. The LED lamp tube of claim 15, further comprising a connector located external relative to said substantially elongate member, wherein said second end of said set of electrical connecting wires is secured in an appropriate position in said connector.

21. The LED lamp tube of claim 20, wherein said external connector is at least one of a quick-connect configured connector and a WAGO connector.

22. The LED lamp tube of claim 20, wherein said external connector is configured to directly connect said second end of said set of electrical connecting wires to a branch wire circuit providing power to said LED lamp tube.

23. The LED lamp tube of claim 15, wherein said first and said second end surfaces comprise corresponding first and second end caps, wherein at least one pin is secured on each of said first and second end caps, said at least one pin secured on each of said first and said second end caps is electrically isolated from said at least one driver circuit and said fluorescent light fixture.

24. The LED lamp tube of claim 23, wherein at least two pins are secured in each of said first and second end caps, each of said at least two pins being configured to mechanically mount said LED lamp tube relative to said fluorescent light fixture without any electrical connection there-between.

25. The LED lamp tube of claim 23, wherein said at least one pin is configured for use with at least one of a T8 and a T12 lighting fixture.

26. The LED lamp tube of claim 15, wherein said driver circuit comprises a dimmer circuit portion.

27. The LED lamp tube of claim 15, wherein:

said intermediate surface comprises a lens portion and a back cover portion, said lens and back cover portions forming there between said interior cavity of said LED lamp tube;

said at least one driver circuit being positioned within said interior cavity substantially adjacent said back cover portion; and

said at least one LED being positioned within said interior cavity substantially adjacent said lens portion.

28. A light emitting diode (LED) lamp tube for placement in a fluorescent light fixture, said tube comprising:

a substantially elongate member comprising a first end surface, a second end surface, and an intermediate surface substantially between said first and second end surfaces, said surfaces collectively defining an interior face and an exterior face of said elongate member, said exterior face being oppositely oriented relative to said interior face, said interior face further defining an interior cavity of said elongate member;

at least one light emitting diode (LED) positioned within said interior cavity and adjacent said intermediate surface;

a passage formed through at least a portion of said substantially elongate member, said passage defining an opening through both said interior face and said exterior face of said substantially elongate member;

a set of continuous electrical connecting wires, said set of continuous electrical connecting wires having a first end and second end with the set of electrical connecting wires extending continuously there-between,

wherein:

said first end is disposed within said interior cavity and places the electrical connecting wires in electrical communication with said at least one LED,

said second end is disposed outside of said interior cavity and places the electrical connecting wires in electrical communication with line voltage, and

an intermediate portion of said electrical connecting wires passes through said passage; and

at least one pin secured on each of said first and second end surfaces, wherein at least a portion of said pin is disposed external said interior cavity and configured to mount said LED lamp tube to said fluorescent light fixture such that said at least one pin is electrically isolated from said fluorescent light fixture.

29. The LED lamp tube of claim 28, further comprising at least one driver circuit disposed within said interior cavity of said elongate member, said driver circuit comprising said set of electrical connecting wires and being configured to provide a controllable electrical current to said at least one LED.

30. The LED lamp tube of claim 29, wherein said at least one pin is further electrically isolated from said at least one driver circuit.

31. The LED lamp tube of claim **28**, further comprising a connector located external relative to said substantially elongate member, wherein said first end of said set of electrical connecting wires is secured in said connector.

32. The LED lamp tube of claim **31**, wherein said external connector is configured to directly connect said first end of said set of electrical connecting wires to a branch wire circuit providing power to said LED lamp tube.

33. The LED lamp tube of claim **28**, wherein said passage is located substantially adjacent one end of said intermediate surface.

34. The LED lamp tube of claim **28**, wherein said passage is located substantially adjacent at least one of said first end surface and said second end surface.

35. A method of installing at least one light emitting diode (LED) lamp tube in a fluorescent light fixture, said method comprising the steps of:

(A) providing at least one LED lamp tube comprising:

(1) a substantially elongate member comprising a first end surface, a second end surface, and an intermediate surface substantially between said first and second end surfaces, said surfaces collectively defining an interior cavity of said elongate member;

(2) at least one light emitting diode (LED) positioned within said interior cavity and adjacent at least a portion of said intermediate surface;

(3) at least one driver circuit positioned wholly within said interior cavity, said driver circuit comprising at least a first end of a set of continuous electrical connecting wires and being configured to provide a controllable electrical current to said at least one LED;

(4) a passage formed through at least a portion of said substantially elongate member, said passage defining an opening through both said interior face and said exterior face of said substantially elongate member;

(5) said set of continuous electrical connecting wires having a second end, said set of continuous electrical connecting wires extending continuously between said first end and said second end, wherein said second end is disposed outside of said interior cavity and is configured to connect to line voltage, an intermediate portion of said continuous electrical connecting wires passes through said passage; and

(6) at least one pin secured on each of said first and second end surfaces, wherein at least a portion of said pin is disposed external said interior cavity and electrically isolated from at least said at least one driver circuit;

(B) mounting said at least one LED lamp tube into said fluorescent light fixture via said at least one pin such that said pin is further electrically isolated from said fluorescent light fixture;

(C) electrically connecting said at least one internally positioned driver circuit to said fluorescent light fixture via said set of continuous electrical connecting wires extending substantially through said passage.

36. The method of claim **35**, wherein step (C) involves using at least one quick-connect connector.

37. The method of claim **35**, wherein said at least one LED lamp tube comprises at least two LED lamp tubes and said method further comprises said steps of:

(D) mounting a second one of said at least two LED lamp tubes into said lighting fixture via said at least one pin such that said pin is further electrically isolated from said fluorescent light fixture; and

(E) electrically connecting said at least one internally positioned driver circuit of a second one of said at least two LED lamp tubes to said fluorescent light fixture via said set of electrical connecting wires, such that said at least two LED lamp tubes are independently wired to said fluorescent light fixture, relative to one another.

38. The method of claim **37**, wherein at least one quick-connect connector is used to at least partially electrically connect said at least two LED lamp tubes to said fluorescent light fixture.

* * * * *