US009148922B2

(12) **United States Patent**
**Shteynberg et al.**

(10) **Patent No.: US 9,148,922 B2**
(45) **Date of Patent: Sep. 29, 2015**

(54) **POWER CONVERSION APPARATUS AND SYSTEM FOR SOLID STATE LIGHTING**

(71) Applicant: **Point Somee Limited Liability Company**, Dover, DE (US)

(72) Inventors: **Anatoly Shteynberg**, San Jose, CA (US); **Harry Rodriguez**, Gilroy, CA (US); **Bradley M. Lehman**, Belmont, MA (US); **Dongsheng Zhou**, San Jose, CA (US); **Harlan H. Ohara**, San Jose, CA (US)

(73) Assignee: **Point Somee Limited Liability Company**, Dover, DE (US)

( * ) Notice: Subject to any disclaimer, the term of this patent is extended or adjusted under 35 U.S.C. 154(b) by 0 days.

(21) Appl. No.: **14/267,820**

(22) Filed: **May 1, 2014**

(65) **Prior Publication Data**

US 2014/0239832 A1 Aug. 28, 2014

**Related U.S. Application Data**

(60) Division of application No. 12/969,316, filed on Dec. 15, 2010, now Pat. No. 8,742,674, which is a continuation-in-part of application No. 12/778,767, filed on May 12, 2010, now Pat. No. 8,558,470, which

(Continued)

(51) **Int. Cl.**
***H05B 37/02*** (2006.01)
***H05B 33/08*** (2006.01)

(52) **U.S. Cl.**
CPC ..... ***H05B 33/0815*** (2013.01); ***H05B 33/0818*** (2013.01); ***H05B 33/0845*** (2013.01); *Y02B 20/347* (2013.01)

(58) **Field of Classification Search**
USPC ..... 315/201, 209 R, 224, 225, 227 R, 291, 315/307, 308
See application file for complete search history.

(56) **References Cited**

U.S. PATENT DOCUMENTS

| | | | | |
|---|---|---|---|---|
| 3,283,252 | A | | 11/1966 | Mead, Jr. |
| 5,748,042 | A | | 5/1998 | Norris |
| 6,011,357 | A | | 1/2000 | Gradzki |
| 6,091,614 | A | | 7/2000 | Malenfant |
| 6,150,771 | A | * | 11/2000 | Perry ..... 315/291 |
| 6,150,802 | A | | 11/2000 | Andrews |
| 6,153,985 | A | | 11/2000 | Grossman |

(Continued)

OTHER PUBLICATIONS

"AND8136/D: Offline LED Driver," Semiconductor Components Industries, LLC, Phoenix, Mar. 2005—Rev. 1, 6 pages.

(Continued)

*Primary Examiner* — Douglas W Owens
*Assistant Examiner* — Thai Pham
(74) *Attorney, Agent, or Firm* — Christensen O'Connor Johnson Kindness PLLC

(57) **ABSTRACT**

Exemplary embodiments provide for power conversion for solid state lighting coupled to a first switch, such as a dimmer switch. An exemplary apparatus includes a switching power supply and a first adaptive interface circuit. The first adaptive interface circuit may include a resistive impedance coupled in series to a reactive impedance. The apparatus may also include a second adaptive interface circuit including a second switch coupled to the reactive impedance. The second adaptive interface circuit is configured to conduct current from the first switch in a second current path. At least one of the first and second adaptive interface circuits may be configured to damp oscillation when the first switch turns on.

**26 Claims, 28 Drawing Sheets**

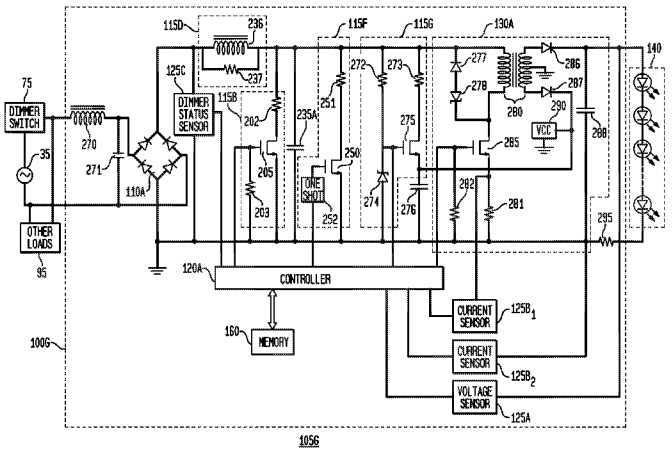

**Related U.S. Application Data**

is a continuation-in-part of application No. 12/639,255, filed on Dec. 16, 2009, now Pat. No. 8,441,210, which is a continuation-in-part of application No. 11/655,558, filed on Jan. 19, 2007, now Pat. No. 7,656,103.

(60) Provisional application No. 60/760,157, filed on Jan. 20, 2006.

(56) **References Cited**

U.S. PATENT DOCUMENTS

| | | | | |
|---|---|---|---|---|
| 6,175,195 | B1 * | 1/2001 | Janczak et al. | 315/194 |
| 6,198,611 | B1 | 3/2001 | Macbeth | |
| 6,304,464 | B1 | 10/2001 | Jacobs | |
| 6,400,102 | B1 | 6/2002 | Ghanem | |
| 6,441,558 | B1 | 8/2002 | Muthu | |
| 6,489,755 | B1 * | 12/2002 | Boudreaux et al. | 323/282 |
| 6,515,434 | B1 | 2/2003 | Biebl | |
| 6,577,072 | B2 | 6/2003 | Saito | |
| 6,577,512 | B2 | 6/2003 | Tripathi | |
| 6,597,127 | B2 | 7/2003 | Takahashi | |
| 6,628,089 | B2 | 9/2003 | Suomi | |
| 6,747,420 | B2 | 6/2004 | Barth | |
| 6,781,351 | B2 | 8/2004 | Mednik | |
| 6,798,152 | B2 | 9/2004 | Rooke | |
| 6,809,498 | B2 | 10/2004 | Nakamura | |
| 6,870,327 | B2 | 3/2005 | Takahashi | |
| 6,977,472 | B2 | 12/2005 | Matsubayashi | |
| 7,119,494 | B2 | 10/2006 | Hui | |
| 7,126,290 | B2 | 10/2006 | Elliott | |
| 7,140,742 | B2 | 11/2006 | Pohlert | |
| 7,279,878 | B2 | 10/2007 | Ootani | |
| 7,285,919 | B2 | 10/2007 | Newman, Jr. | |
| 7,394,231 | B2 | 7/2008 | Flatness | |
| 7,436,163 | B2 | 10/2008 | Katoh | |
| 7,656,103 | B2 | 2/2010 | Shteynberg | |
| 2003/0020442 | A1 | 1/2003 | Hwang | |
| 2004/0207337 | A1 | 10/2004 | Fischer | |
| 2005/0168168 | A1 | 8/2005 | Elliott | |
| 2005/0253533 | A1 | 11/2005 | Lys | |
| 2006/0132061 | A1 | 6/2006 | McCormick | |
| 2007/0182338 | A1 | 8/2007 | Shteynberg | |
| 2007/0182347 | A1 | 8/2007 | Shteynberg | |
| 2007/0267984 | A1 | 11/2007 | Peng | |
| 2009/0200953 | A1 | 8/2009 | King | |
| 2010/0213859 | A1 | 8/2010 | Shteynberg | |
| 2011/0121754 | A1 | 5/2011 | Shteynberg | |
| 2011/0248640 | A1 * | 10/2011 | Welten | 315/210 |
| 2011/0309759 | A1 | 12/2011 | Shteynberg | |

OTHER PUBLICATIONS

"LT1932: Constant Current DC/DC LED Driver in ThinSOT," Linear Technology Corporation, Milpitas, California, 2001, 16 pages.

Mednik, A., "Automotive LED Lighting Needs Special Drivers," Power Electronics Technology, Aug. 2005, pp. 22-28.

"NCP5006: Compact Backlight LED Boost Driver," Semiconductor Components Industries, LLC, Phoenix, Mar. 2006—Rev. 2, 24-page datasheet.

Walding, C., "AND8137/D: High Current LED—Isolated Low Voltage AC Drive Application Note," Semiconductor Components Industries, LLC, Denver, Oct. 2003, 12 pages.

Walding, C., "AND8146/D: High Current LED—Capacitive Drop Drive Application Note," Semiconductor Components Industries, LLC, Denver, Feb. 2004, 14 pages.

International Search Report mailed Apr. 26, 2011, issued in International Application No. PCT/US2010/060580, filed Dec. 15, 2010, 3 pages.

Restriction Requirement dated Apr. 26, 2012, in U.S. Appl. No. 12/639,255, filed Dec. 16, 2009, 11 pages.

Office Action dated Sep. 10, 2012, in U.S. Appl. No. 12/639,255, filed Dec. 16, 2009, 15 pages.

Notice of Allowance dated Jan. 18, 2013, U.S. Appl. No. 12/639,255, filed Dec. 16, 2009, 12 pages.

Office Action dated Oct. 24, 2012, in U.S. Appl. No. 12/778,767, filed May 12, 2010, 14 pages.

Final Office Action dated Apr. 19, 2013, in U.S. Appl. No. 12/778,767, filed May 12, 2010, 12 pages.

Restriction Requirement dated Feb. 25, 2013, in U.S. Appl. No. 12/969,316, filed Dec. 15, 2010, 7 pages.

Office Action dated Jul. 8, 2013, in U.S. Appl. No. 12/969,316, filed Dec. 15, 2010, 42 pages.

Final Office Action dated Nov. 7, 2013, in U.S. Appl. No. 12/969,316, filed Dec. 15, 2010, 23 pages.

Notice of Allowance dated Jan. 21, 2014, in U.S. Appl. No. 12/969,316, filed Dec. 15, 2010, 9 pages.

Office Action Ex parte Quayle dated Sep. 3, 2013, in U.S. Appl. No. 13/893,313, filed May 13, 2013, 20 pages.

Notice of Allowance dated Jun. 28, 2013, U.S. Appl. No. 12/778,767, filed May 12, 2010, 8 pages.

Notice of Allowance dated Dec. 10, 2013, in U.S. Appl. No. 13/893,313, filed May 13, 2013, 9 pages.

* cited by examiner

FIG. 1
(PRIOR ART)

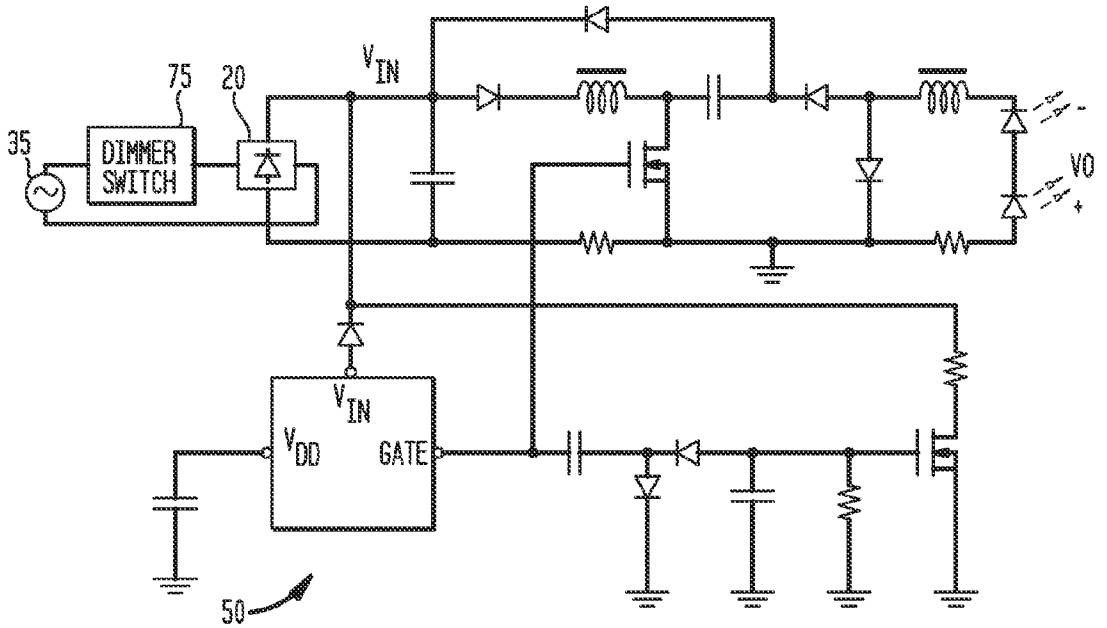


FIG. 2
(PRIOR ART)

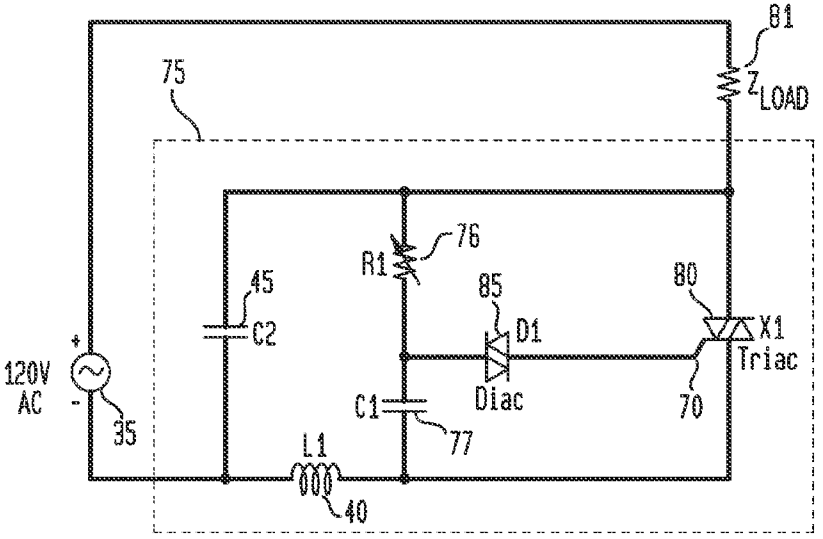

FIG. 3

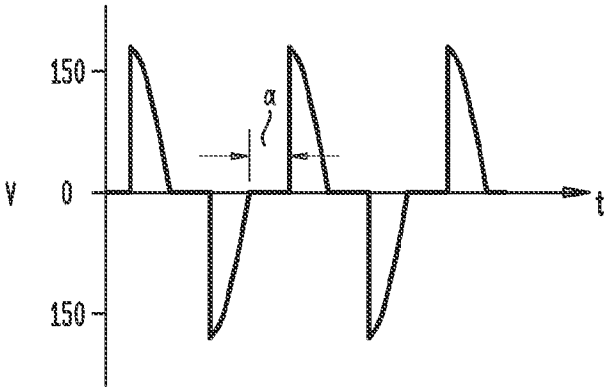


FIG. 4

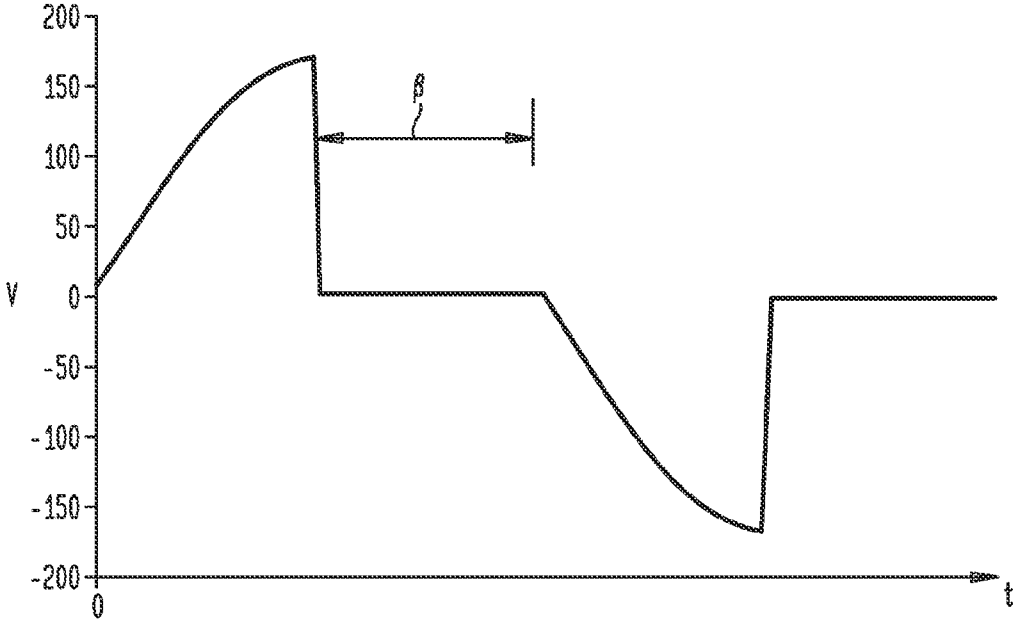

FIG. 5
(PRIOR ART)

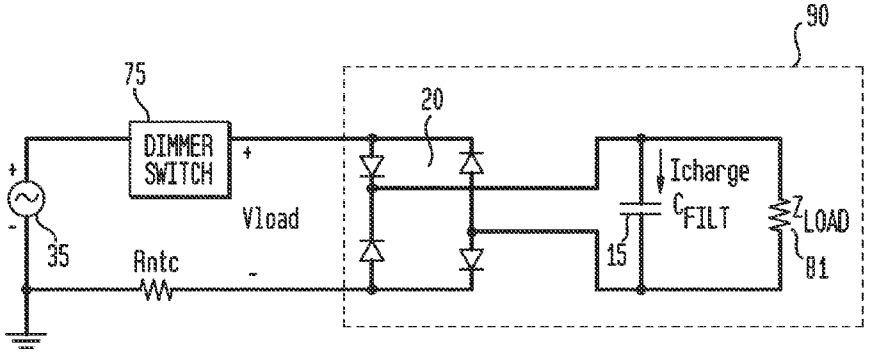


FIG. 6

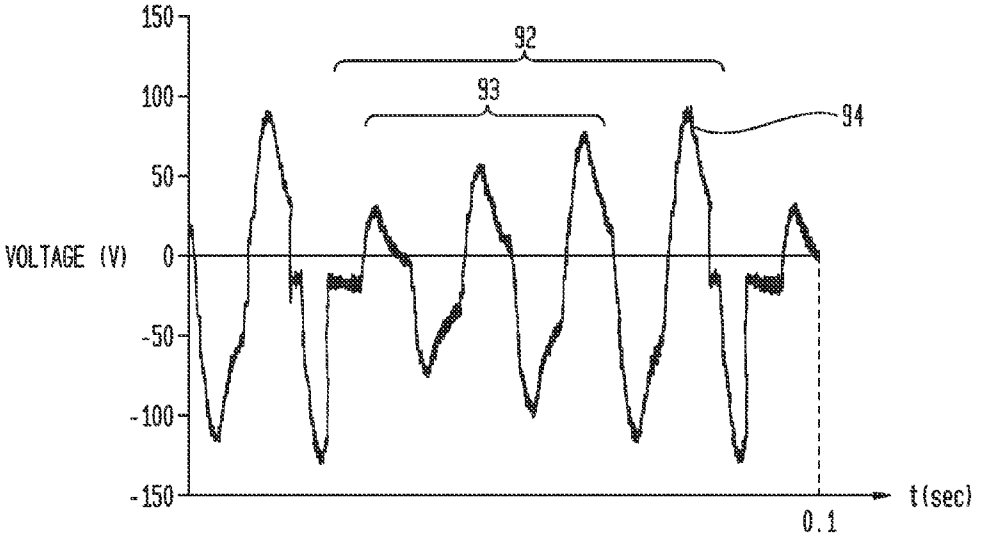

FIG. 7

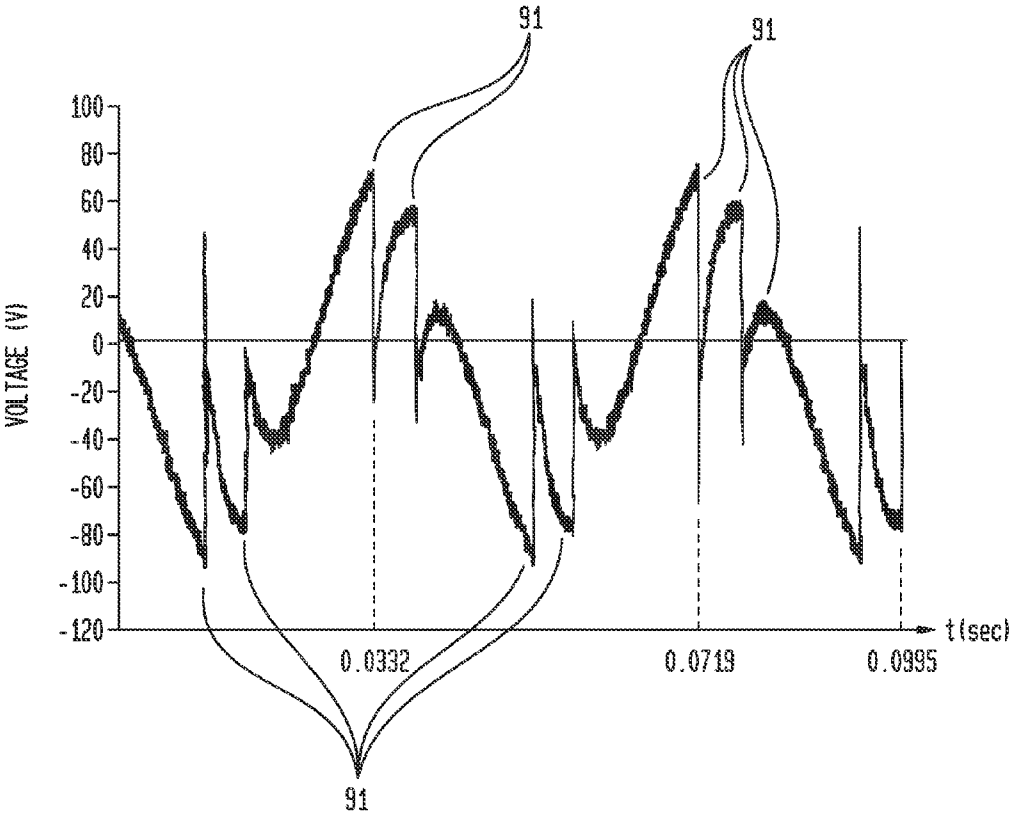
91
91
100
80
60
40
20
0
-20
-40
-60
-80
-100
-120
VOLTAGE (V)
0.0332
0.0719
0.0995
t(sec)
91

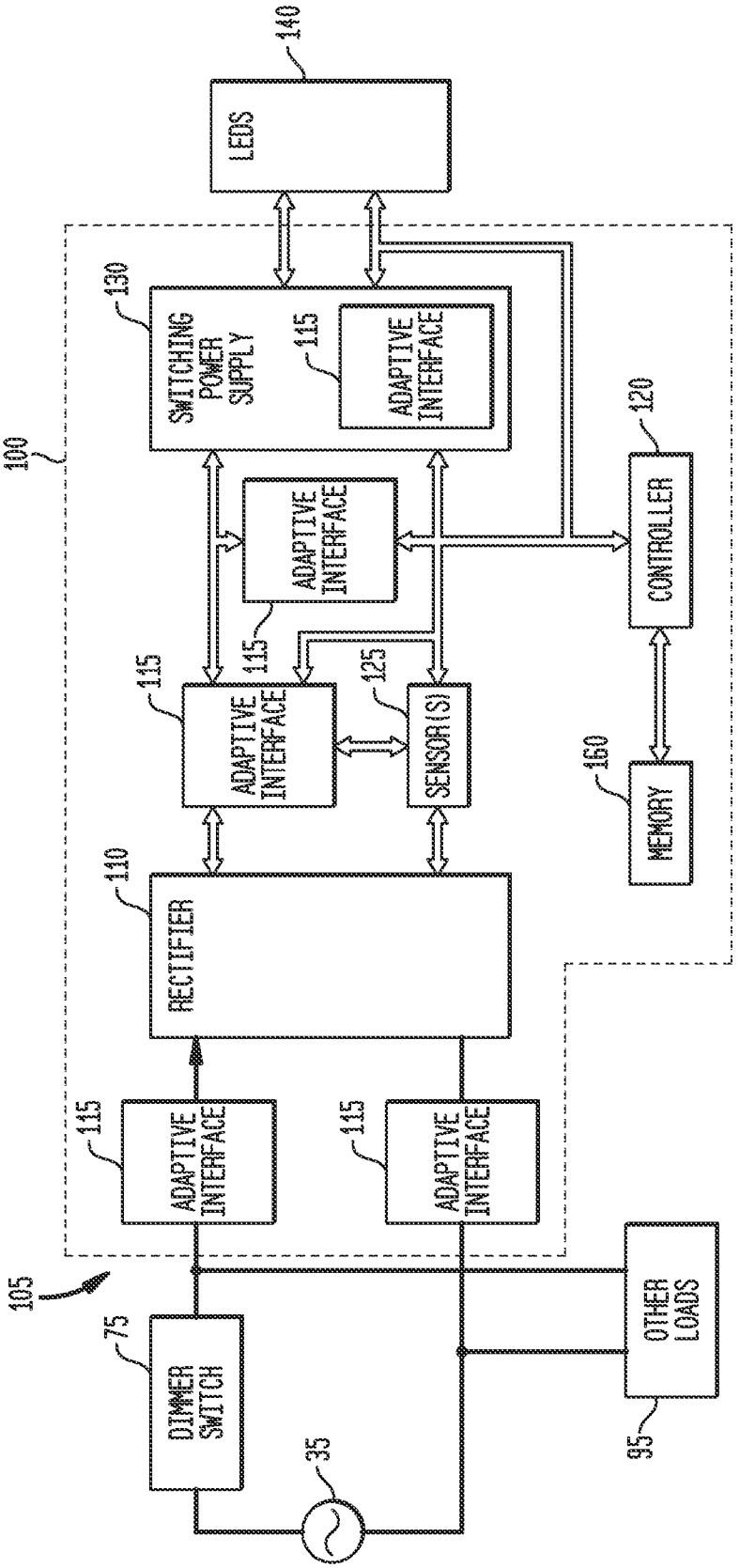
LEDS
140
SWITCHING POWER SUPPLY
130
ADAPTIVE INTERFACE
115
100
ADAPTIVE INTERFACE
115
CONTROLLER
120
ADAPTIVE INTERFACE
115
SENSOR(S)
125
MEMORY
160
RECTIFIER
110
ADAPTIVE INTERFACE
115
ADAPTIVE INTERFACE
115
105
DIMMER SWITCH
75
35
OTHER LOADS
95

FIG. 8

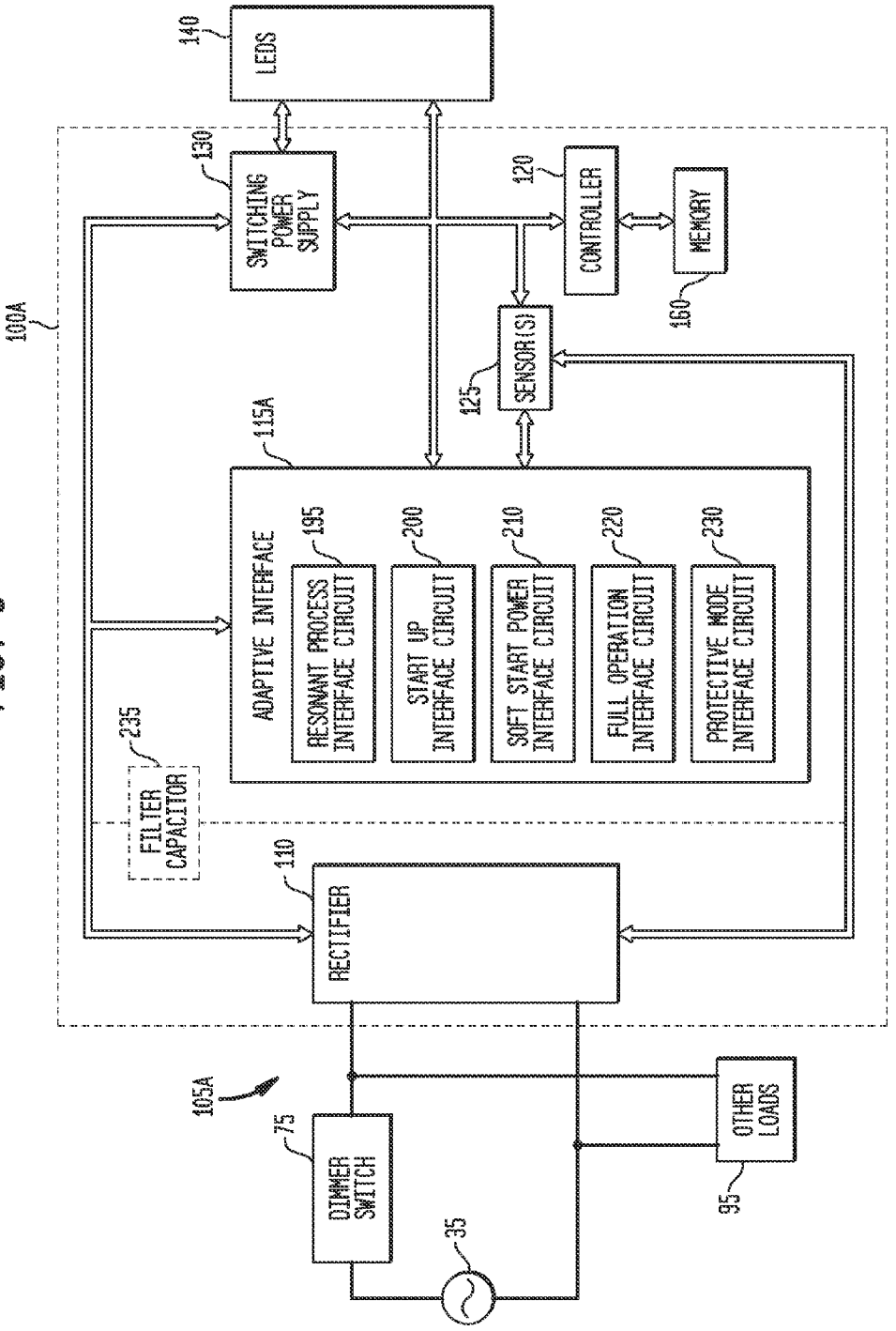
100A
140
LEDS
130
SWITCHING POWER SUPPLY
120
CONTROLLER
MEMORY
160
125
SENSOR(S)
115A
ADAPTIVE INTERFACE
195
RESONANT PROCESS INTERFACE CIRCUIT
200
START UP INTERFACE CIRCUIT
210
SOFT START POWER INTERFACE CIRCUIT
220
FULL OPERATION INTERFACE CIRCUIT
230
PROTECTIVE MODE INTERFACE CIRCUIT
235
FILTER CAPACITOR
110
RECTIFIER
105A
75
DIMMER SWITCH
35
OTHER LOADS
95

FIG. 9

FIG. 10

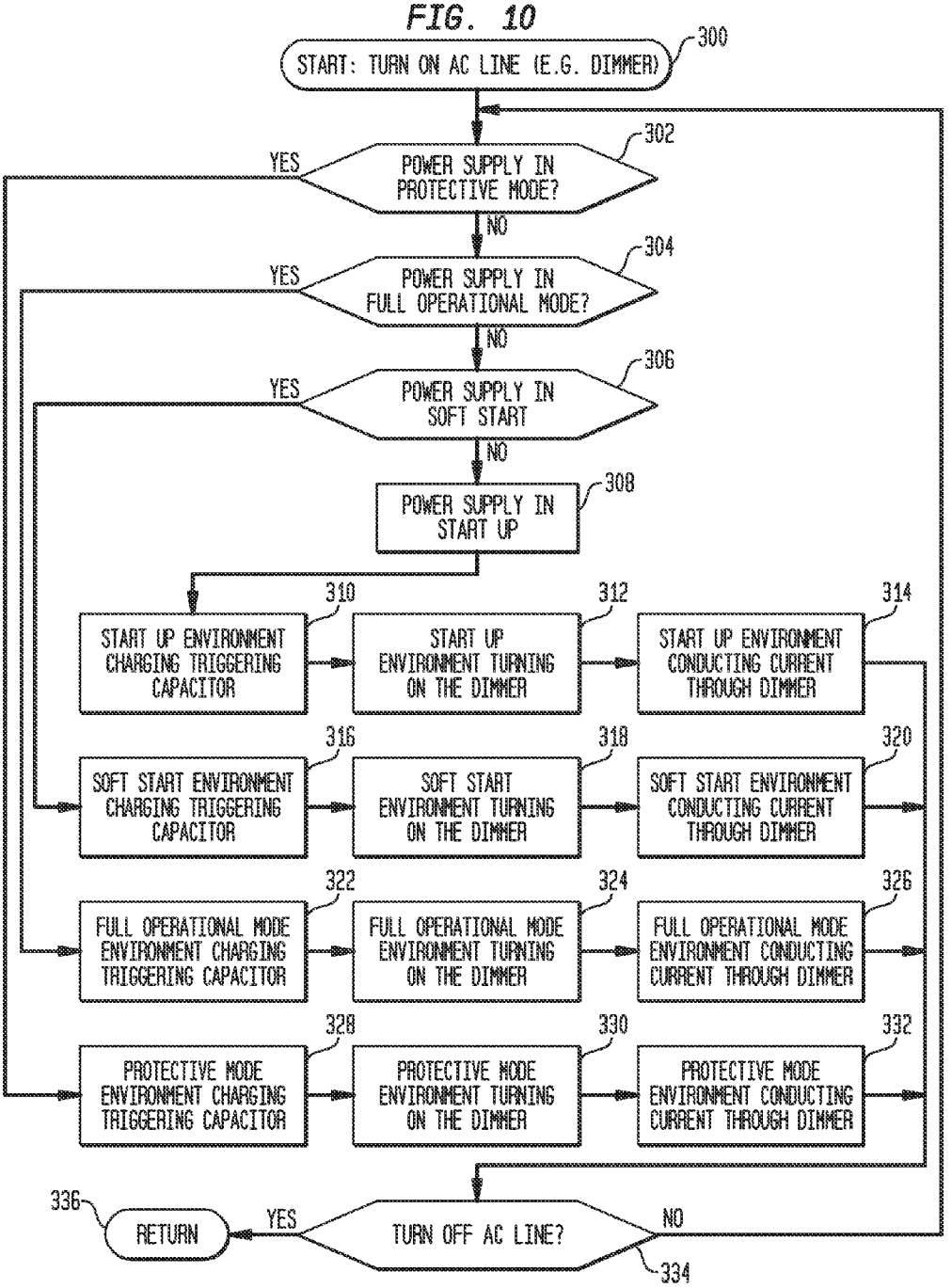
START: TURN ON AC LINE (E.G. DIMMER)
300
POWER SUPPLY IN PROTECTIVE MODE?
302
YES
NO
POWER SUPPLY IN FULL OPERATIONAL MODE?
304
YES
NO
POWER SUPPLY IN SOFT START
306
YES
NO
POWER SUPPLY IN START UP
308
START UP ENVIRONMENT CHARGING TRIGGERING CAPACITOR
310
START UP ENVIRONMENT TURNING ON THE DIMMER
312
START UP ENVIRONMENT CONDUCTING CURRENT THROUGH DIMMER
314
SOFT START ENVIRONMENT CHARGING TRIGGERING CAPACITOR
316
SOFT START ENVIRONMENT TURNING ON THE DIMMER
318
SOFT START ENVIRONMENT CONDUCTING CURRENT THROUGH DIMMER
320
FULL OPERATIONAL MODE ENVIRONMENT CHARGING TRIGGERING CAPACITOR
322
FULL OPERATIONAL MODE ENVIRONMENT TURNING ON THE DIMMER
324
FULL OPERATIONAL MODE ENVIRONMENT CONDUCTING CURRENT THROUGH DIMMER
326
PROTECTIVE MODE ENVIRONMENT CHARGING TRIGGERING CAPACITOR
328
PROTECTIVE MODE ENVIRONMENT TURNING ON THE DIMMER
330
PROTECTIVE MODE ENVIRONMENT CONDUCTING CURRENT THROUGH DIMMER
332
TURN OFF AC LINE?
YES
NO
334
RETURN
336

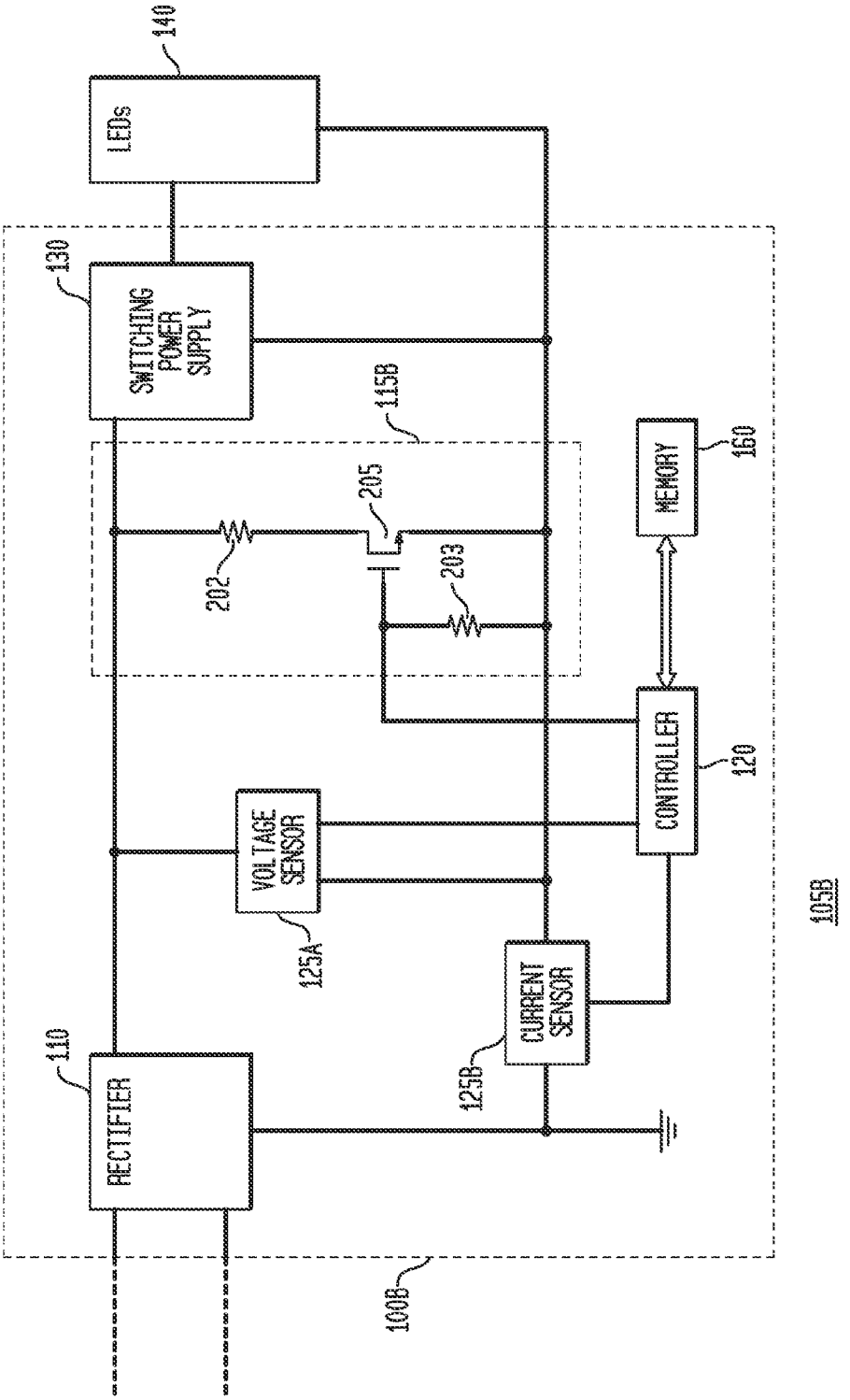
140
LEDs
130
SWITCHING POWER SUPPLY
115B
205
202
203
160
MEMORY
120
CONTROLLER
VOLTAGE SENSOR
125A
CURRENT SENSOR
125B
110
RECTIFIER
100B
105B

FIG. 11

FIG. 12

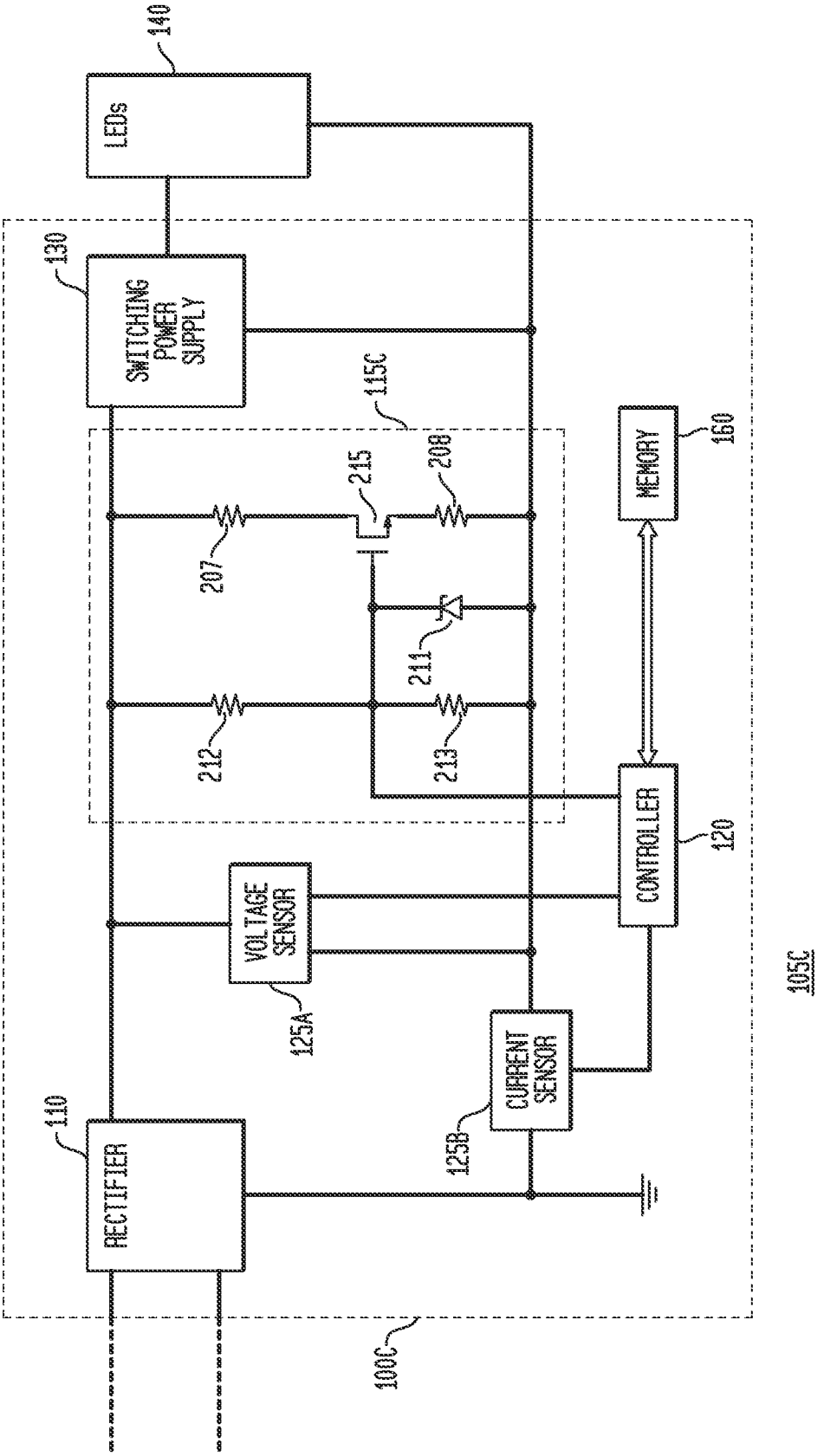
LEDs
140
SWITCHING POWER SUPPLY
130
115C
207
215
208
211
212
213
MEMORY
160
CONTROLLER
120
VOLTAGE SENSOR
125A
CURRENT SENSOR
125B
RECTIFIER
110
100C
105C

FIG. 13

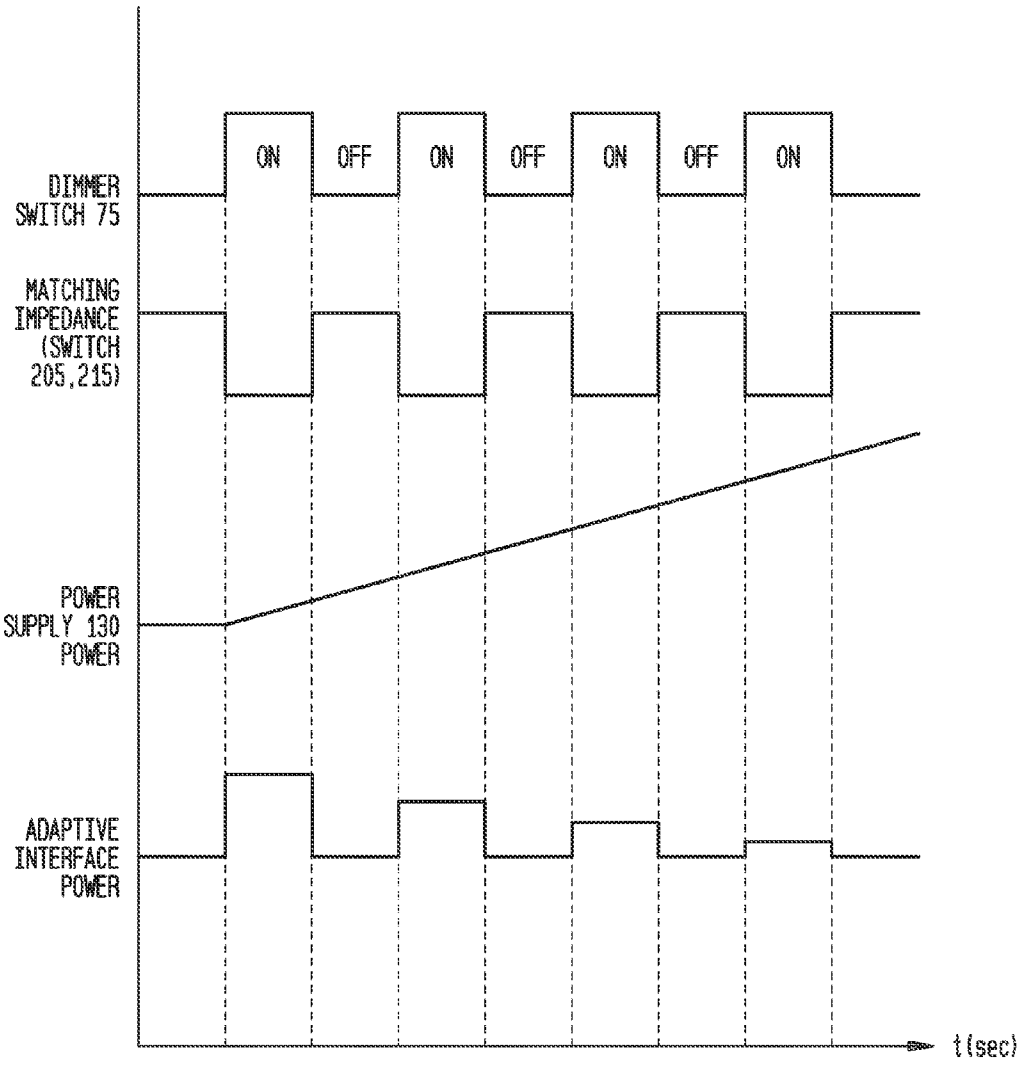
ON
OFF
ON
OFF
ON
OFF
ON
DIMMER SWITCH 75
MATCHING IMPEDANCE (SWITCH 205,215)
POWER SUPPLY 130 POWER
ADAPTIVE INTERFACE POWER
t(sec)

FIG. 14

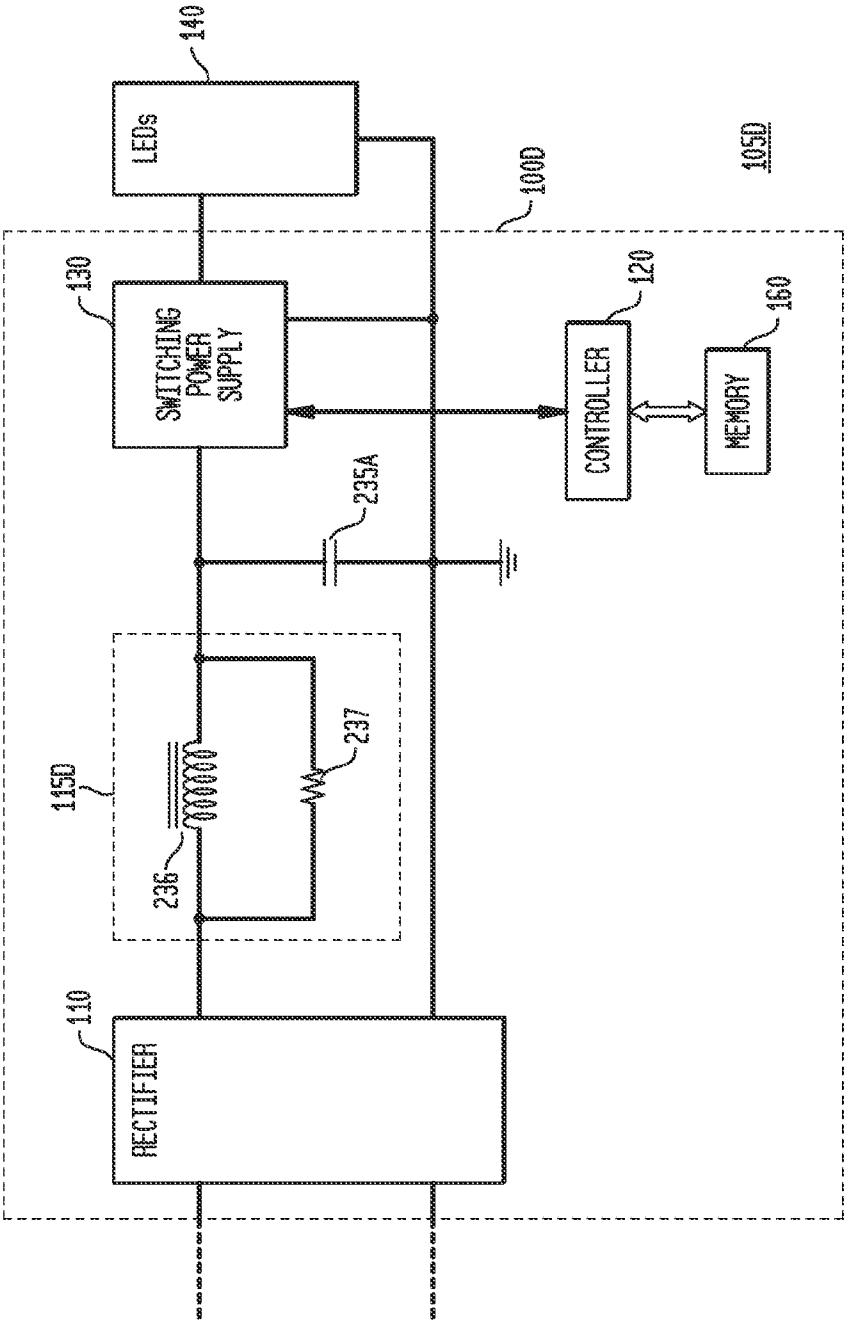
140
LEDs
100D
105D
130
SWITCHING POWER SUPPLY
120
CONTROLLER
160
MEMORY
235A
115D
236
237
110
RECTIFIER

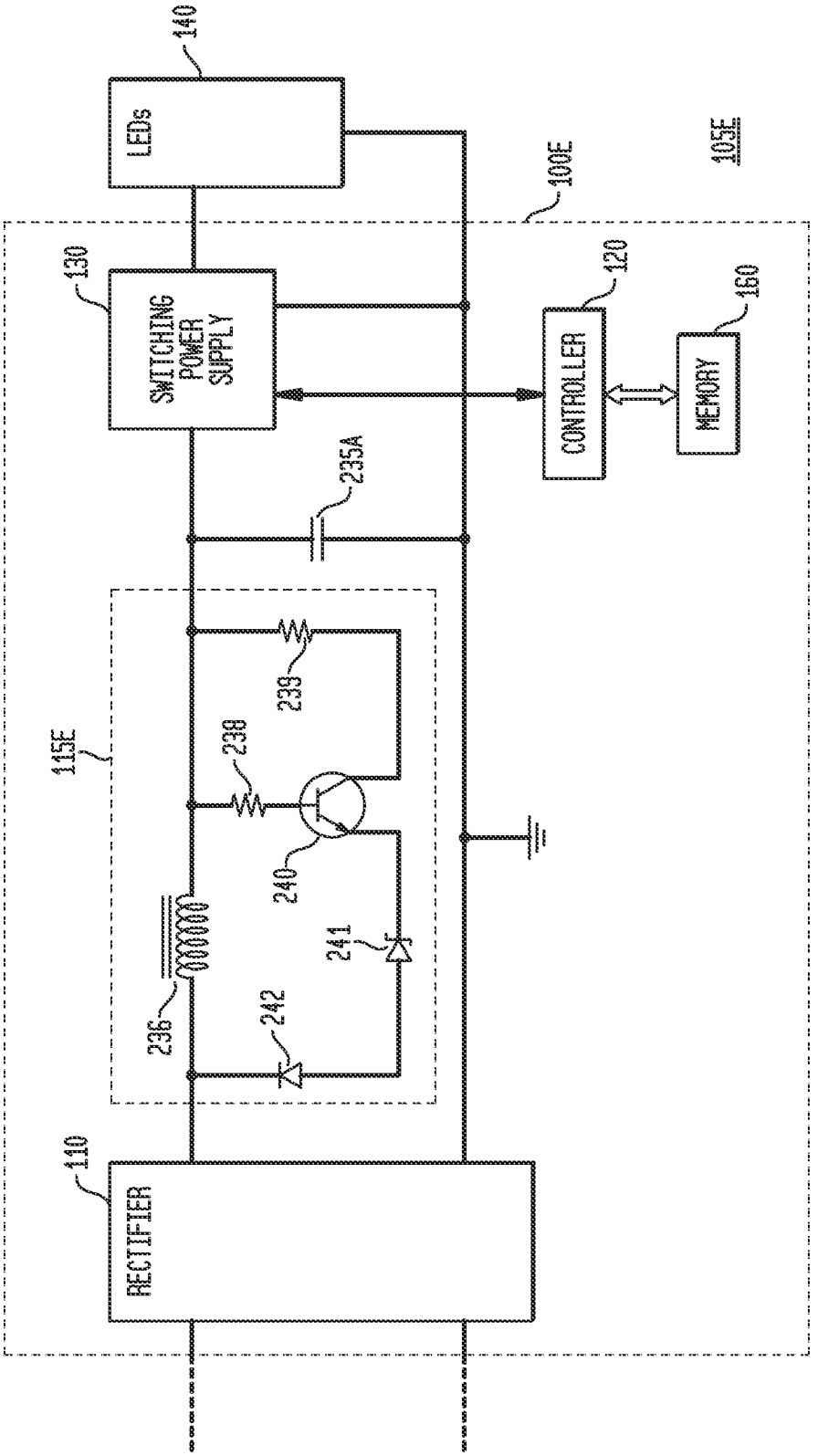
140
LEDs
100E
105E
130
SWITCHING POWER SUPPLY
120
CONTROLLER
160
MEMORY
235A
115E
239
238
240
241
236
242
110
RECTIFIER

FIG. 15

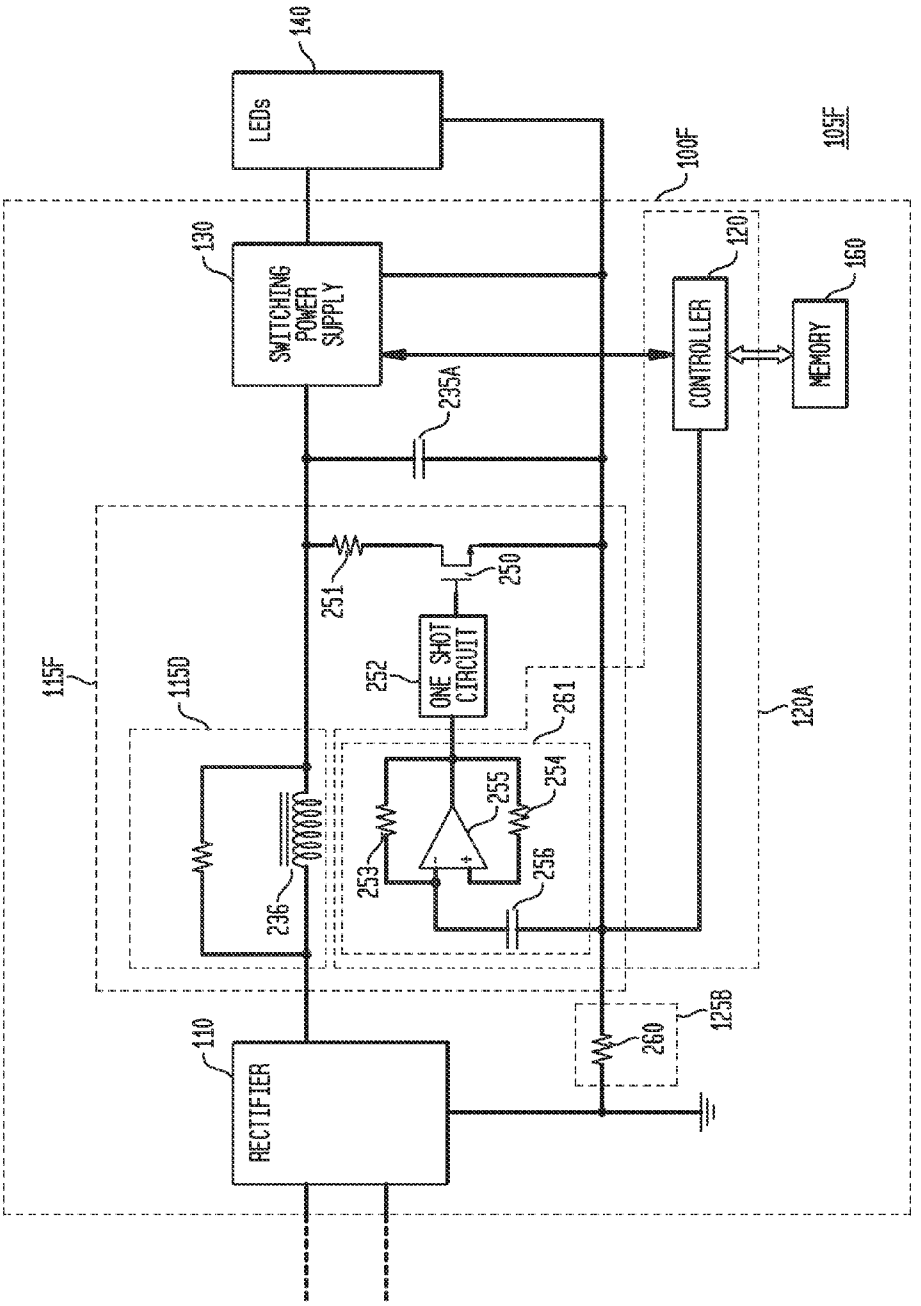
LEDs
140
SWITCHING POWER SUPPLY
130
235A
CONTROLLER
120
MEMORY
160
100F
105F
120A
115F
115D
236
251
250
ONE SHOT CIRCUIT
252
261
253
255
254
256
125B
260
RECTIFIER
110

FIG. 16

FIG. 17

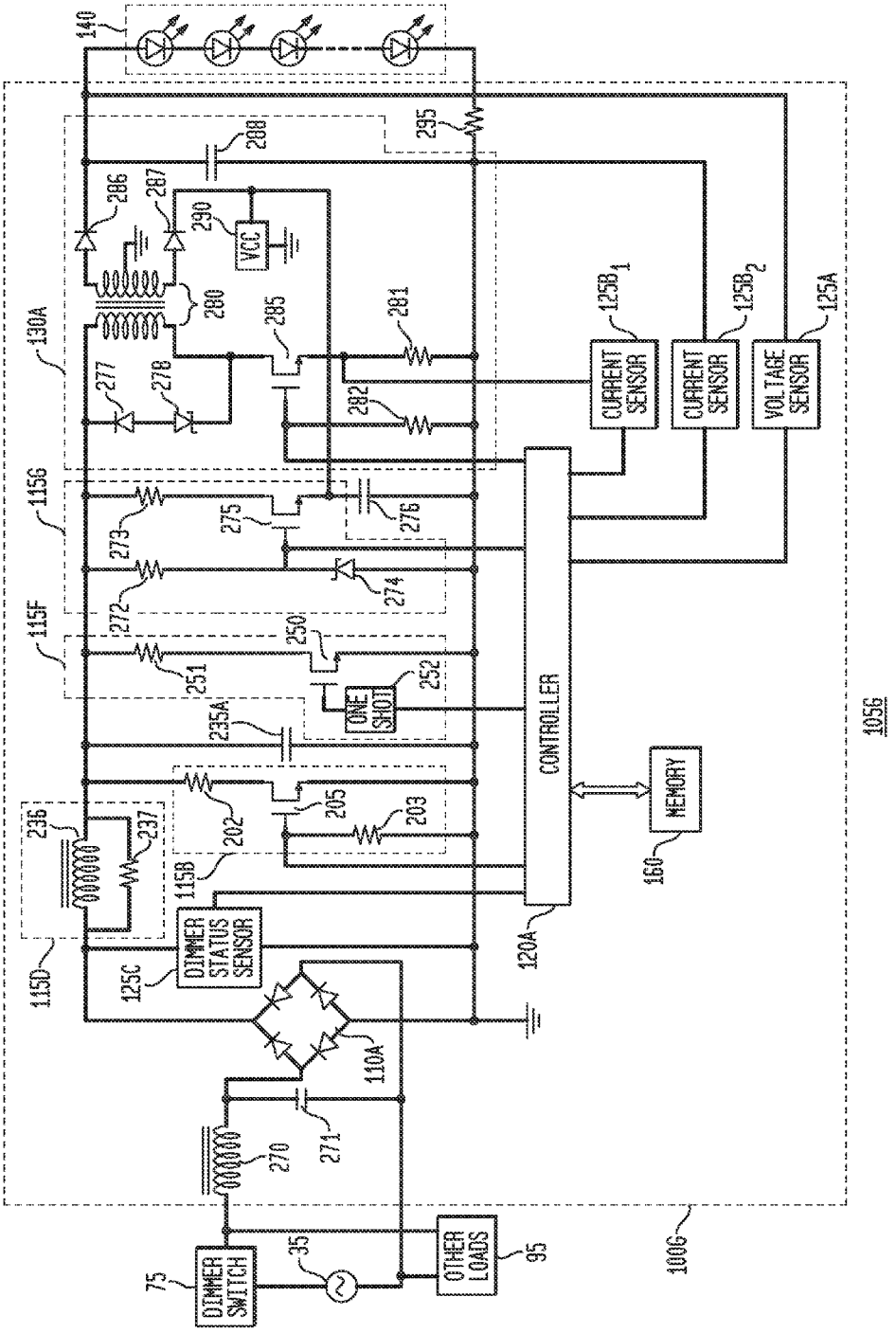
140
295
288
286
287
290
VCC
280
285
281
130A
277
278
282
125B1
CURRENT SENSOR
125B2
CURRENT SENSOR
125A
VOLTAGE SENSOR
115G
273
275
276
272
274
115F
250
251
252
ONE SHOT
235A
CONTROLLER
MEMORY
160
236
237
202
205
203
115B
115D
125C
DIMMER STATUS SENSOR
120A
110A
271
270
75
DIMMER SWITCH
35
OTHER LOADS
95
100G
105G

FIG. 18

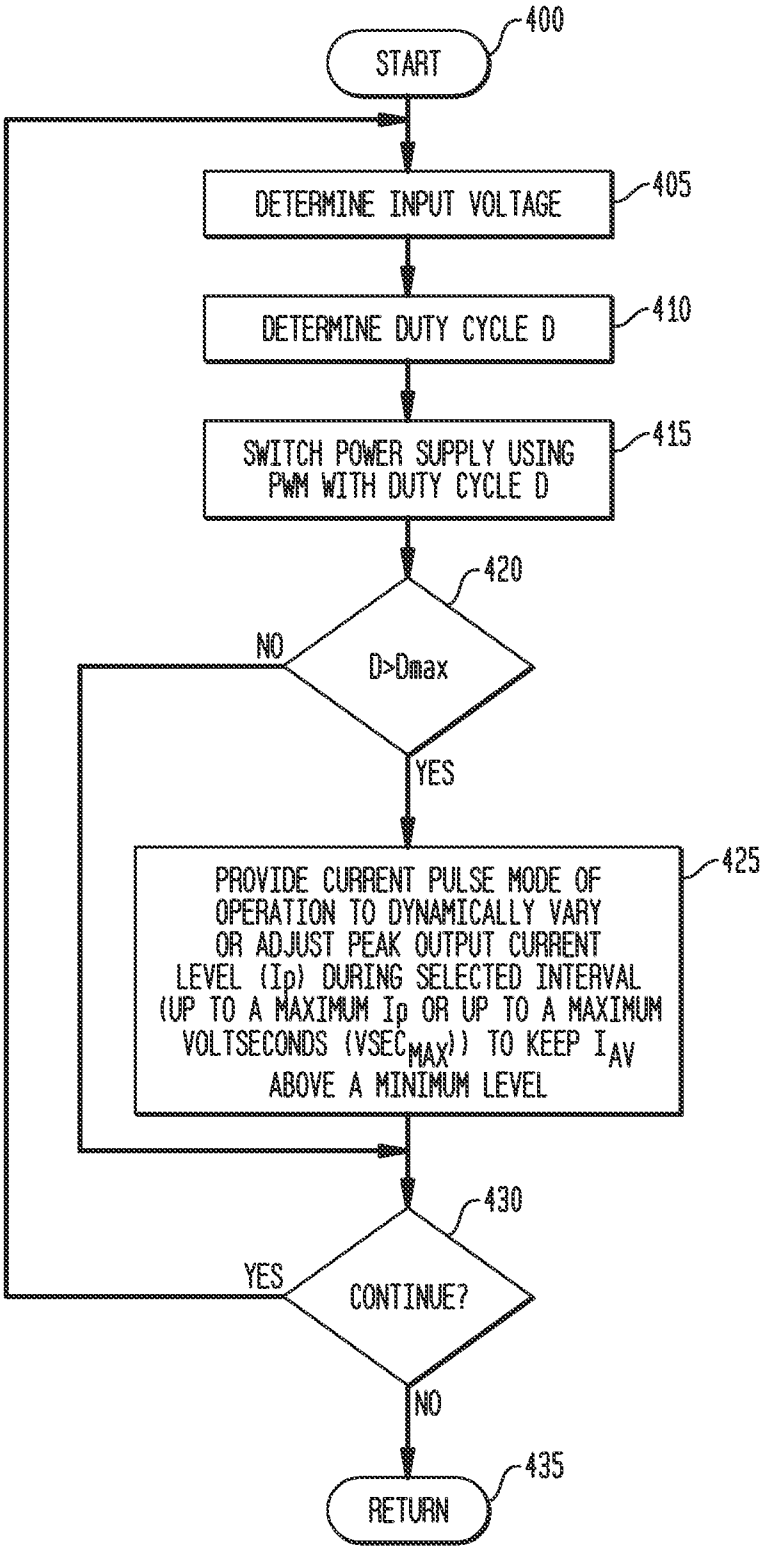
400
START
405
DETERMINE INPUT VOLTAGE
410
DETERMINE DUTY CYCLE D
415
SWITCH POWER SUPPLY USING PWM WITH DUTY CYCLE D
420
D>Dmax
NO
YES
425
PROVIDE CURRENT PULSE MODE OF OPERATION TO DYNAMICALLY VARY OR ADJUST PEAK OUTPUT CURRENT LEVEL (Ip) DURING SELECTED INTERVAL (UP TO A MAXIMUM Ip OR UP TO A MAXIMUM VOLTSECONDS (VSEC$_{MAX}$)) TO KEEP $I_{AV}$ ABOVE A MINIMUM LEVEL
430
CONTINUE?
YES
NO
435
RETURN

FIG. 19

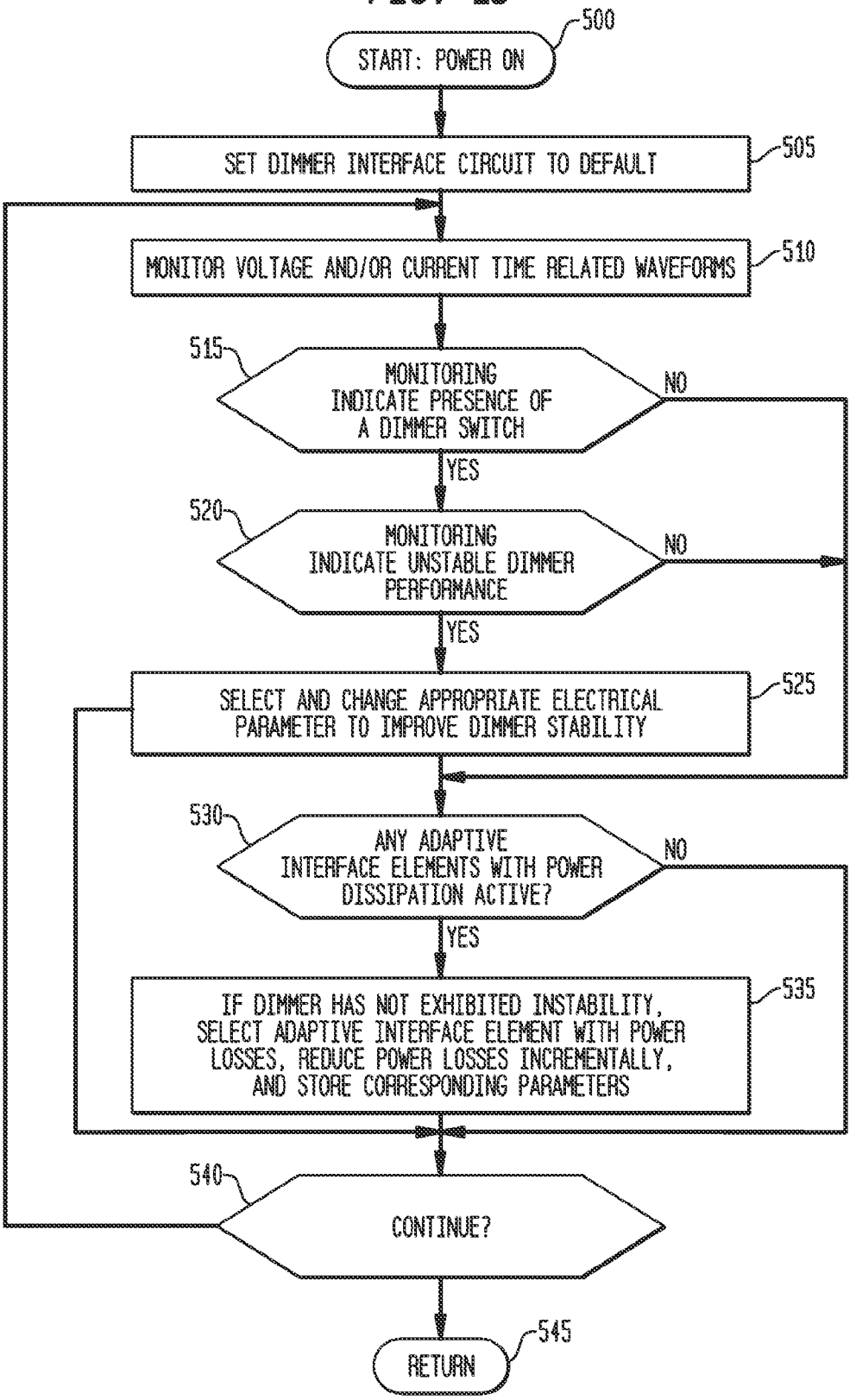
500
START: POWER ON
505
SET DIMMER INTERFACE CIRCUIT TO DEFAULT
510
MONITOR VOLTAGE AND/OR CURRENT TIME RELATED WAVEFORMS
515
MONITORING INDICATE PRESENCE OF A DIMMER SWITCH
NO
YES
520
MONITORING INDICATE UNSTABLE DIMMER PERFORMANCE
NO
YES
525
SELECT AND CHANGE APPROPRIATE ELECTRICAL PARAMETER TO IMPROVE DIMMER STABILITY
530
ANY ADAPTIVE INTERFACE ELEMENTS WITH POWER DISSIPATION ACTIVE?
NO
YES
535
IF DIMMER HAS NOT EXHIBITED INSTABILITY, SELECT ADAPTIVE INTERFACE ELEMENT WITH POWER LOSSES, REDUCE POWER LOSSES INCREMENTALLY, AND STORE CORRESPONDING PARAMETERS
540
CONTINUE?
545
RETURN

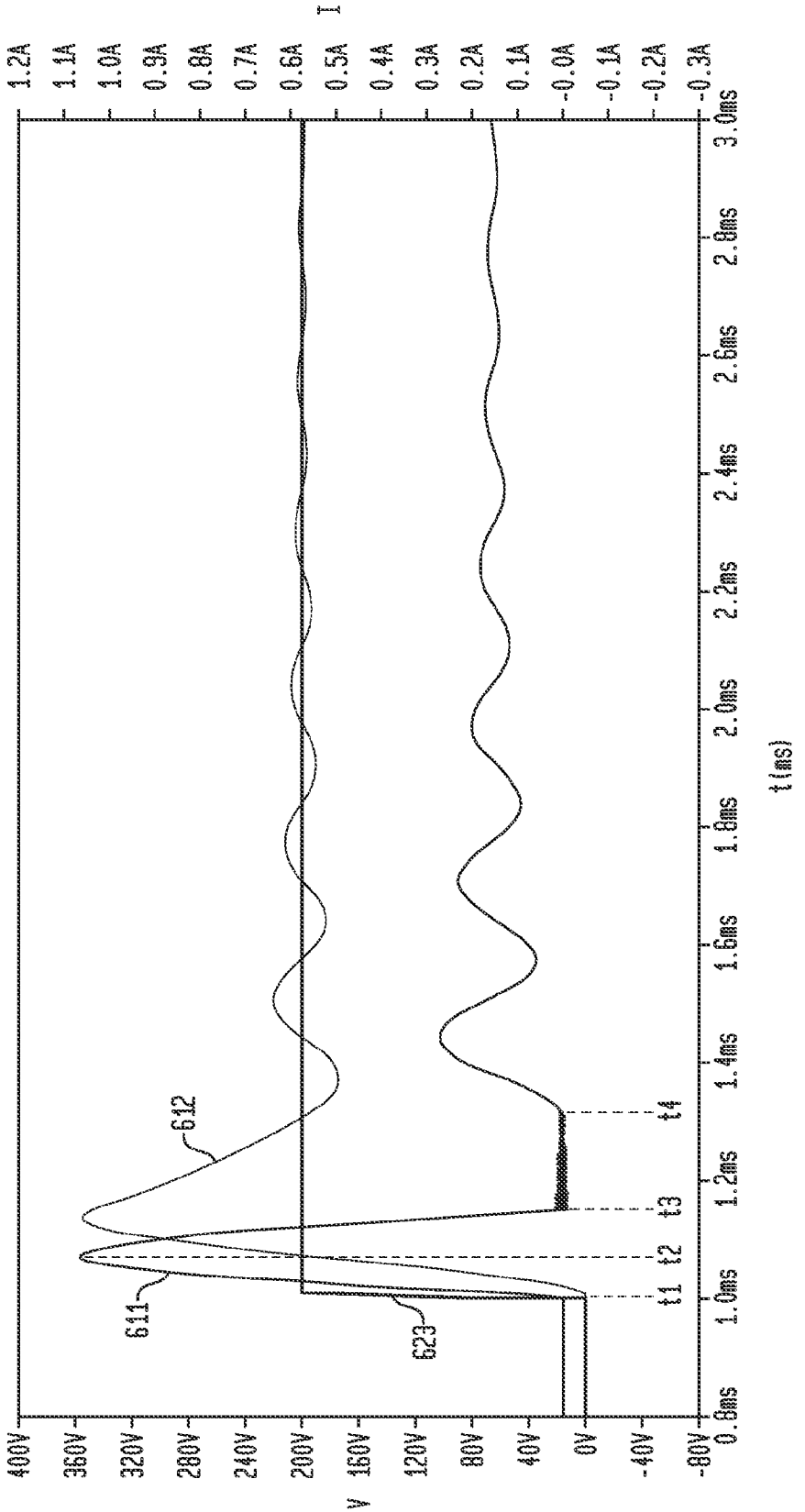
FIG. 20
I
1.2A
1.1A
1.0A
0.9A
0.8A
0.7A
0.6A
0.5A
0.4A
0.3A
0.2A
0.1A
-0.0A
-0.1A
-0.2A
-0.3A
V
400V
360V
320V
280V
240V
200V
160V
120V
80V
40V
0V
-40V
-80V
0.0ms
1.0ms
1.2ms
1.4ms
1.6ms
1.8ms
2.0ms
2.2ms
2.4ms
2.6ms
2.8ms
3.0ms
t (ms)
611
612
623
t1
t2
t3
t4

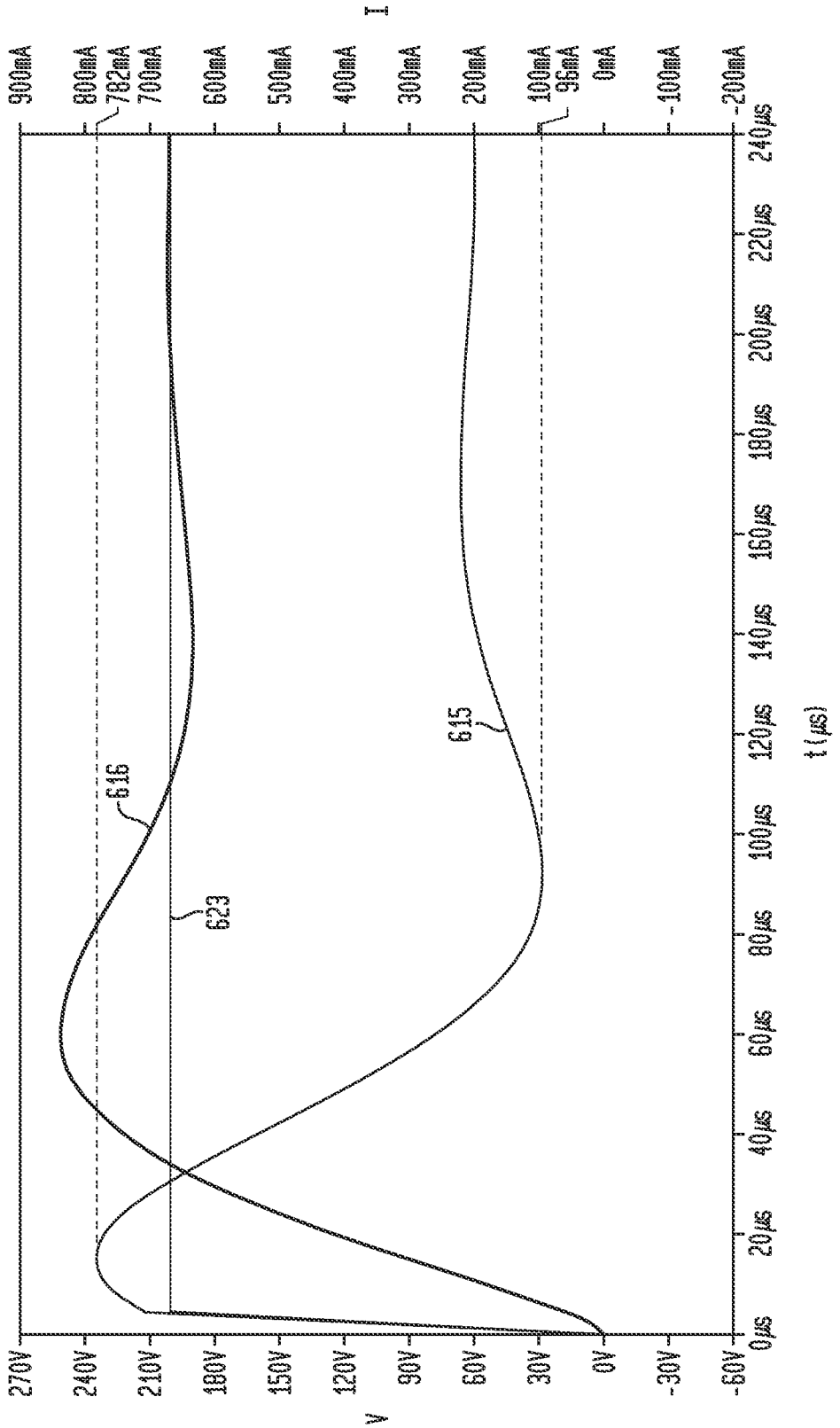
I
900mA
800mA
782mA
700mA
600mA
500mA
400mA
300mA
200mA
100mA
96mA
0mA
-100mA
-200mA
270V
240V
210V
180V
150V
120V
90V
60V
30V
0V
-30V
-60V
V
0μs
20μs
40μs
60μs
80μs
100μs
120μs
140μs
160μs
180μs
200μs
220μs
240μs
t (μs)
616
623
615

FIG. 21

FIG. 22

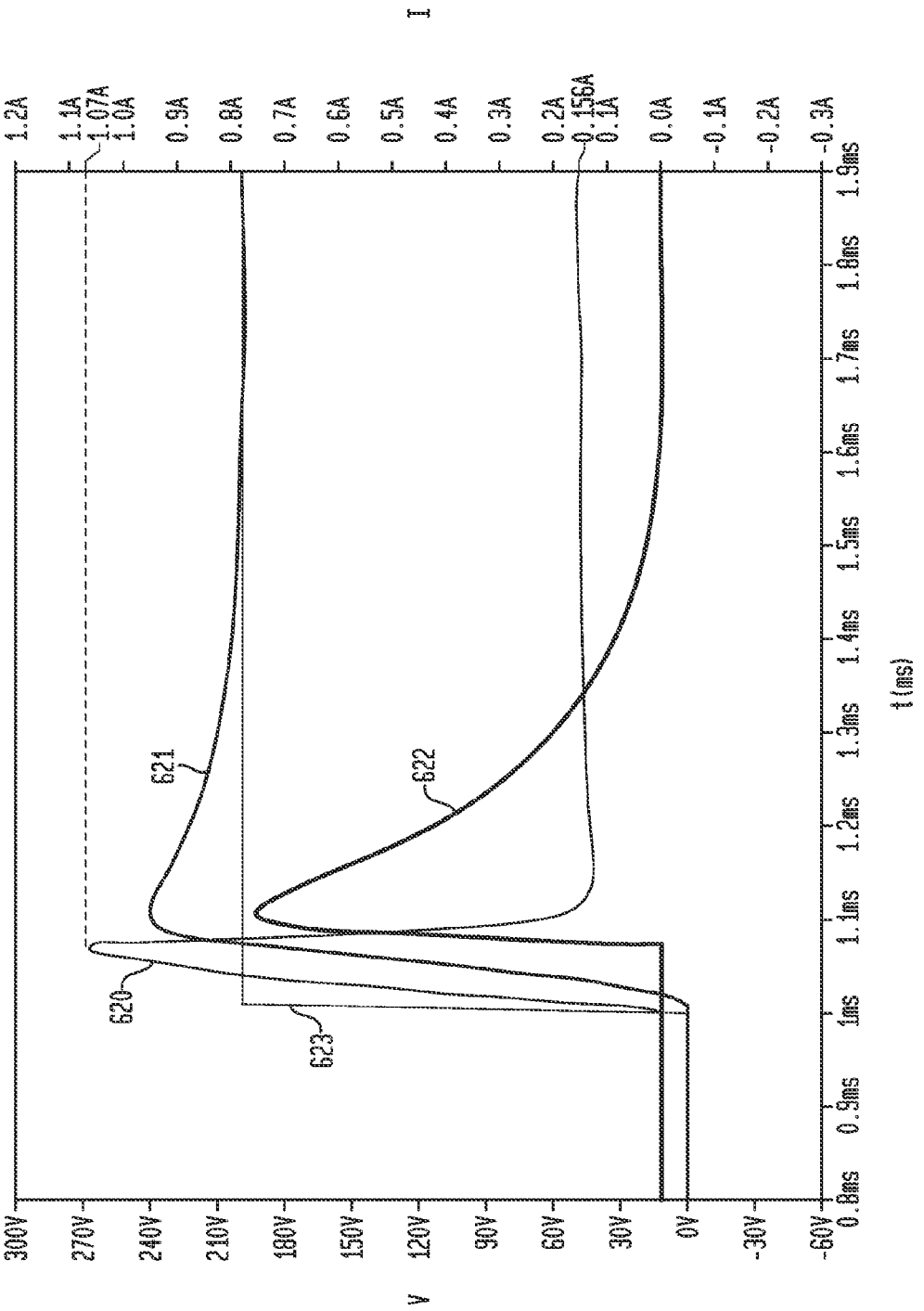
I
1.2A
1.1A
1.07A
1.0A
0.9A
0.8A
0.7A
0.6A
0.5A
0.4A
0.3A
0.2A
0.156A
0.1A
0.0A
-0.1A
-0.2A
-0.3A
300V
270V
240V
210V
180V
150V
120V
90V
60V
30V
0V
-30V
-60V
V
0.8ms
0.9ms
1ms
1.1ms
1.2ms
1.3ms
1.4ms
1.5ms
1.6ms
1.7ms
1.8ms
1.9ms
t (ms)
620
621
622
623

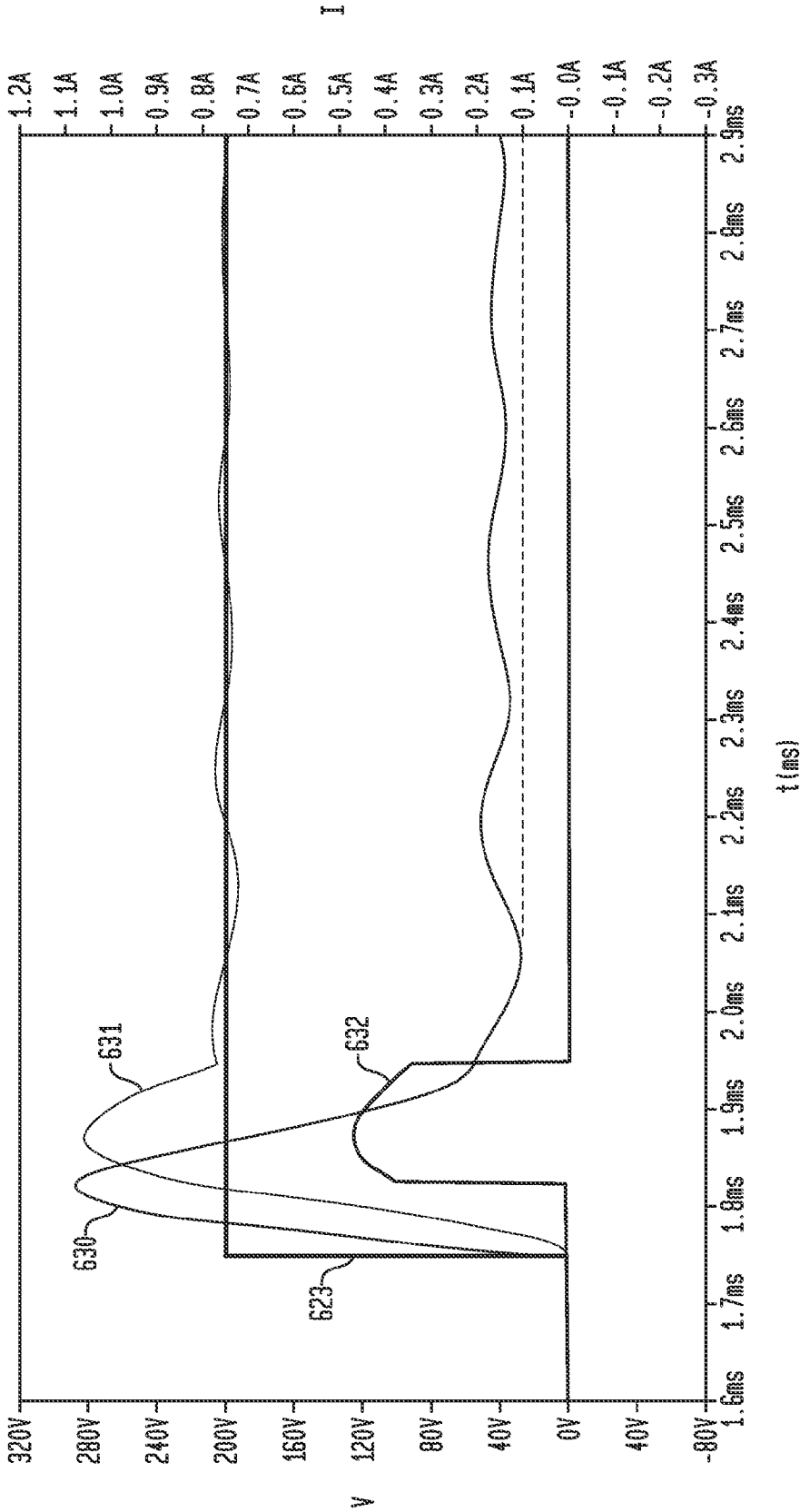
I
1.2A
1.1A
1.0A
0.9A
0.8A
0.7A
0.6A
0.5A
0.4A
0.3A
0.2A
0.1A
-0.0A
-0.1A
-0.2A
-0.3A
320V
280V
240V
200V
160V
120V
80V
40V
0V
40V
-80V
V
1.6ms
1.7ms
1.8ms
1.9ms
2.0ms
2.1ms
2.2ms
2.3ms
2.4ms
2.5ms
2.6ms
2.7ms
2.8ms
2.9ms
t(ms)
630
631
632
623

FIG. 23

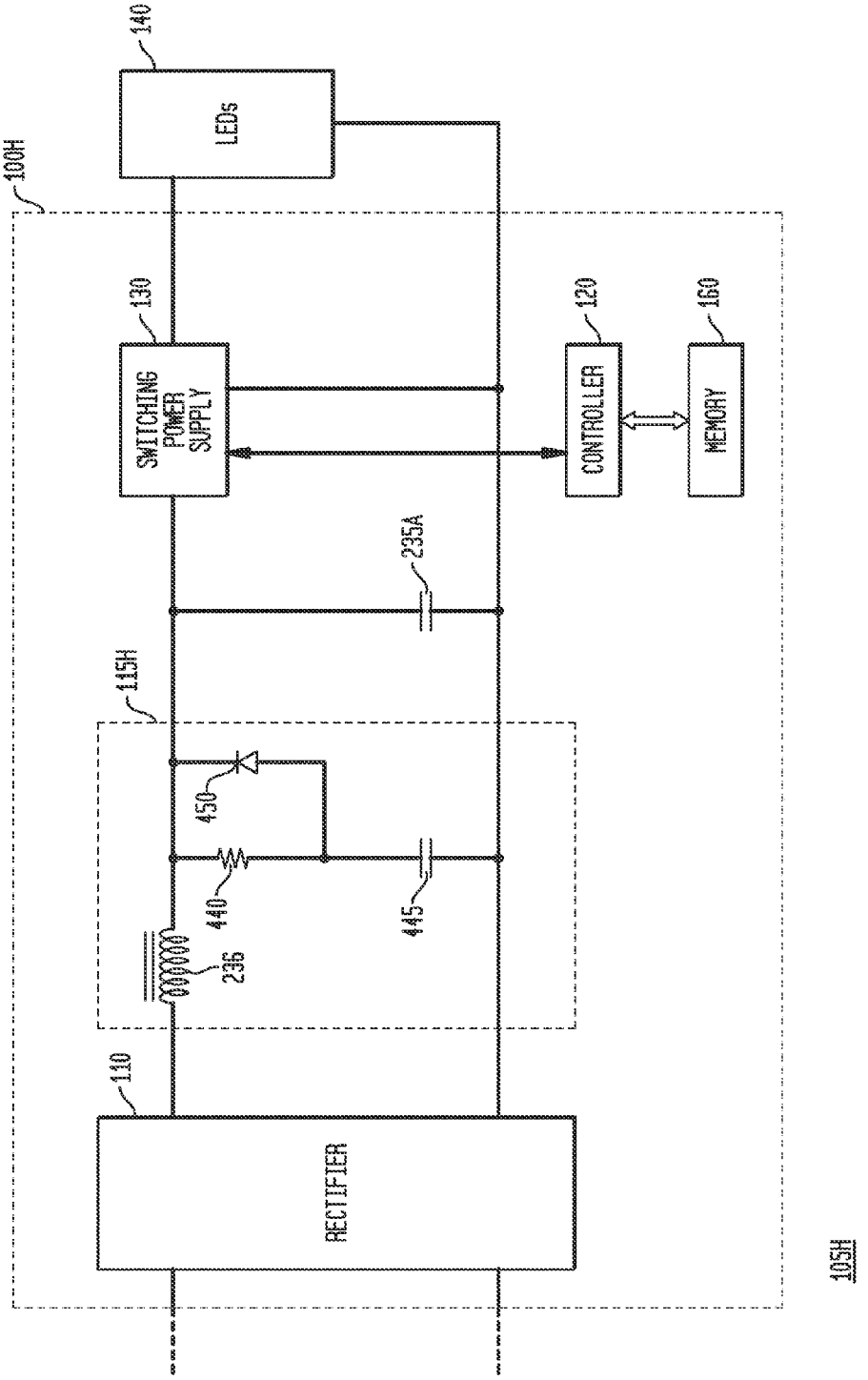
100H
140
LEDs
130
SWITCHING POWER SUPPLY
120
CONTROLLER
160
MEMORY
235A
115H
450
440
445
235
110
RECTIFIER
105H

FIG. 24

FIG. 25

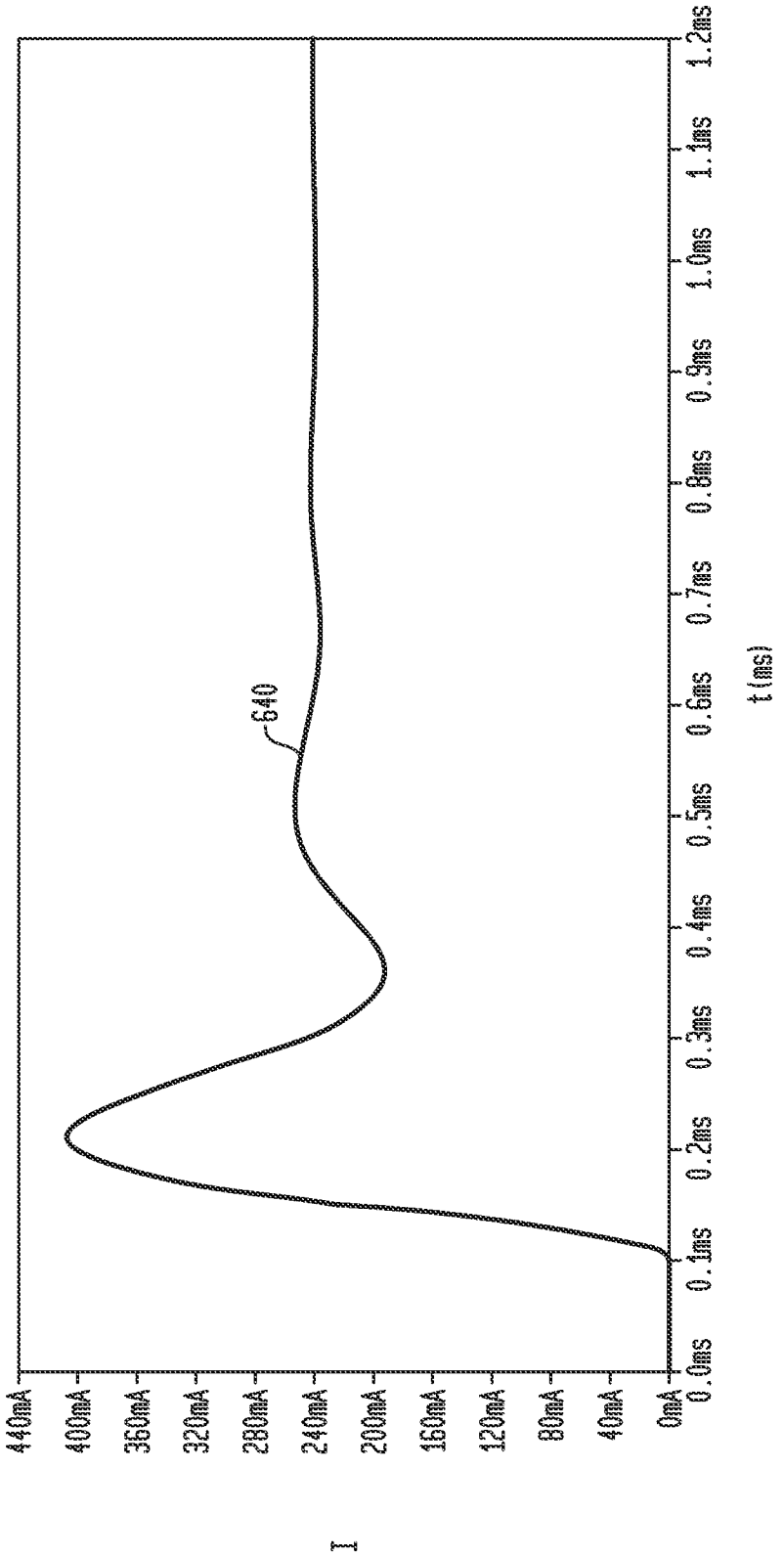
440mA
400mA
360mA
320mA
280mA
240mA
200mA
160mA
120mA
80mA
40mA
0mA
I
640
0.0ms
0.1ms
0.2ms
0.3ms
0.4ms
0.5ms
0.6ms
0.7ms
0.8ms
0.9ms
1.0ms
1.1ms
1.2ms
t (ms)

FIG. 26

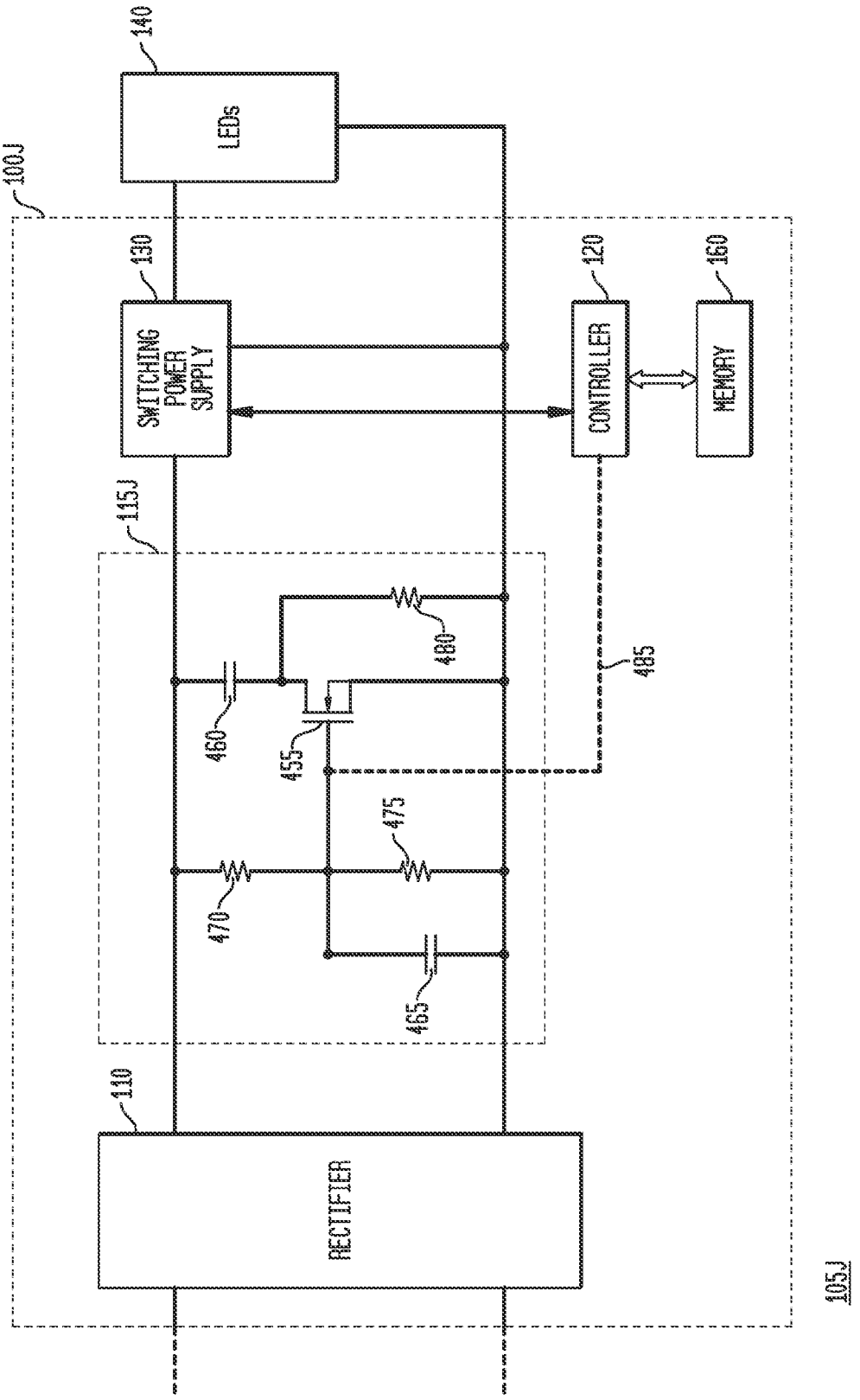
100J
140
LEDs
130
SWITCHING POWER SUPPLY
120
CONTROLLER
160
MEMORY
115J
480
485
460
455
475
470
465
110
RECTIFIER
105J

FIG. 27

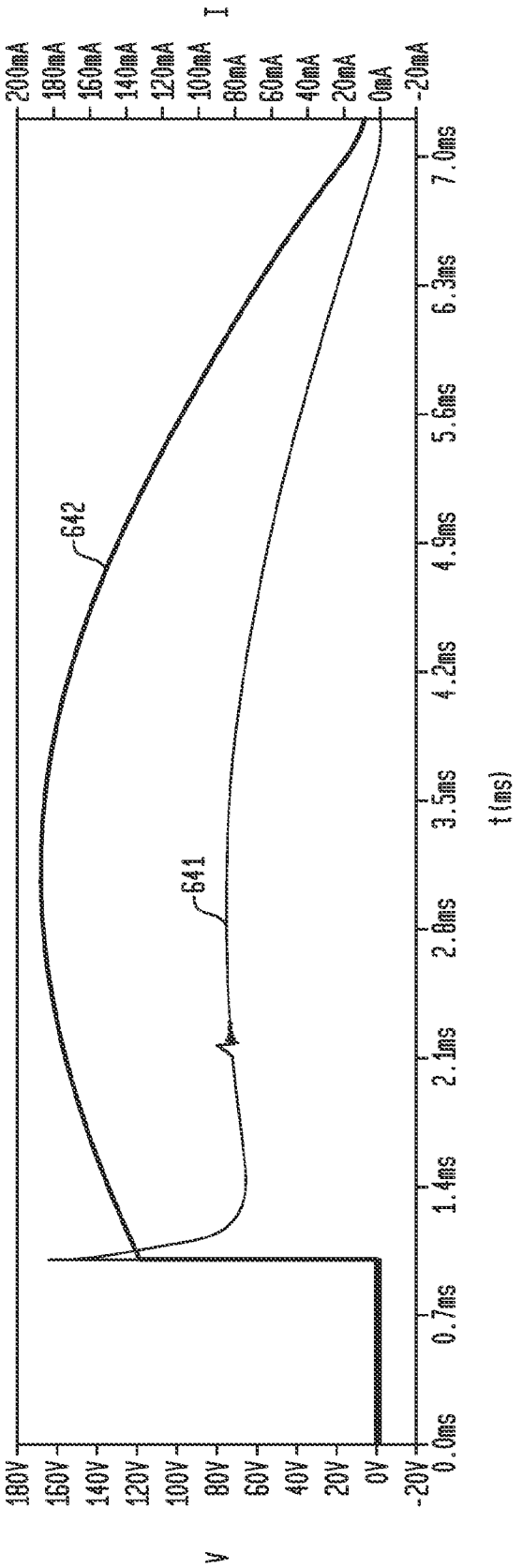
I
200mA
180mA
160mA
140mA
120mA
100mA
80mA
60mA
40mA
20mA
0mA
-20mA
642
641
0.0ms
0.7ms
1.4ms
2.1ms
2.8ms
3.5ms
4.2ms
4.9ms
5.6ms
6.3ms
7.0ms
t (ms)
V
180V
160V
140V
120V
100V
80V
60V
40V
20V
0V
-20V

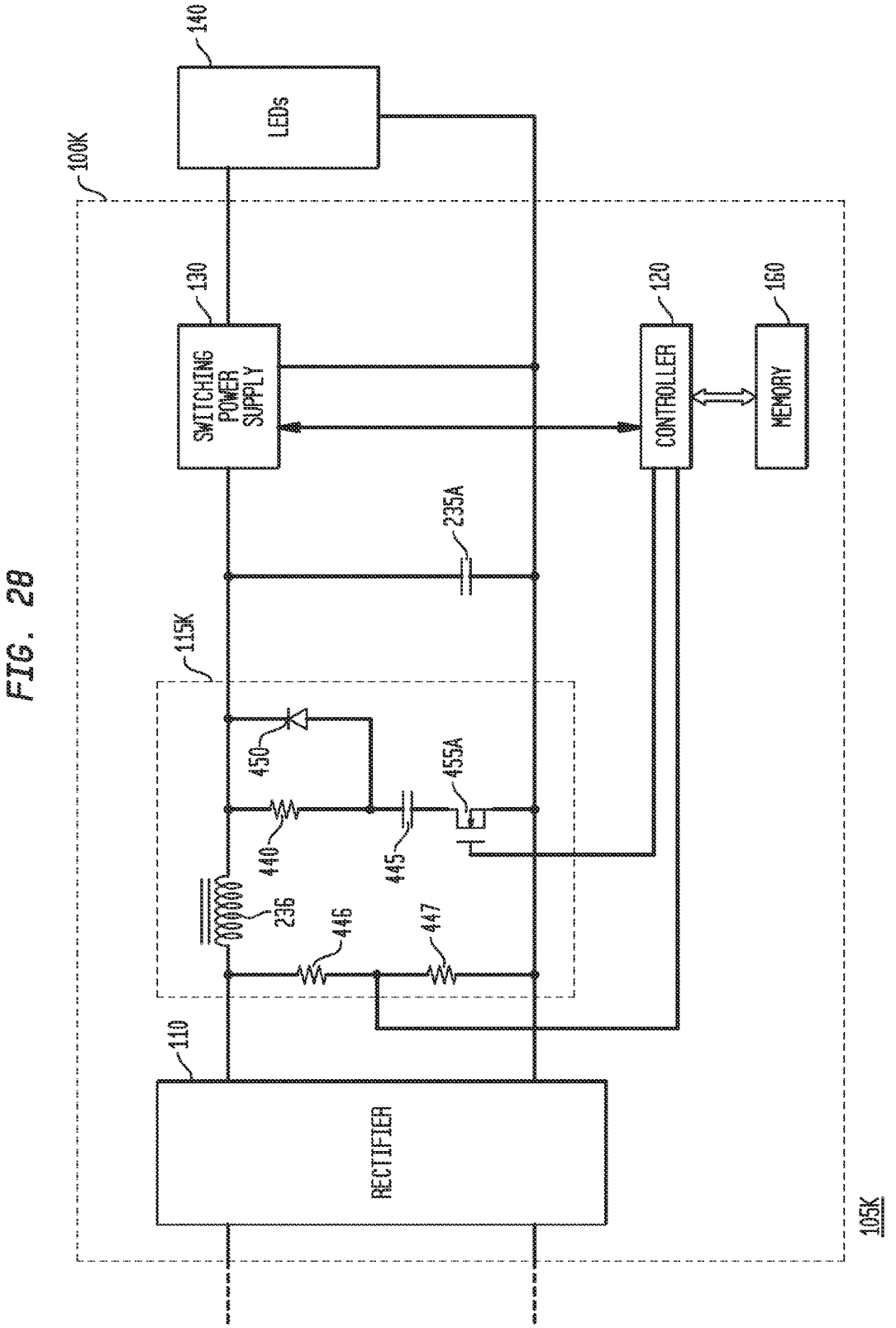
100K
140
LEDs
130
SWITCHING POWER SUPPLY
120
CONTROLLER
160
MEMORY
235A
115K
450
455A
440
445
236
446
447
110
RECTIFIER
105K

FIG. 28

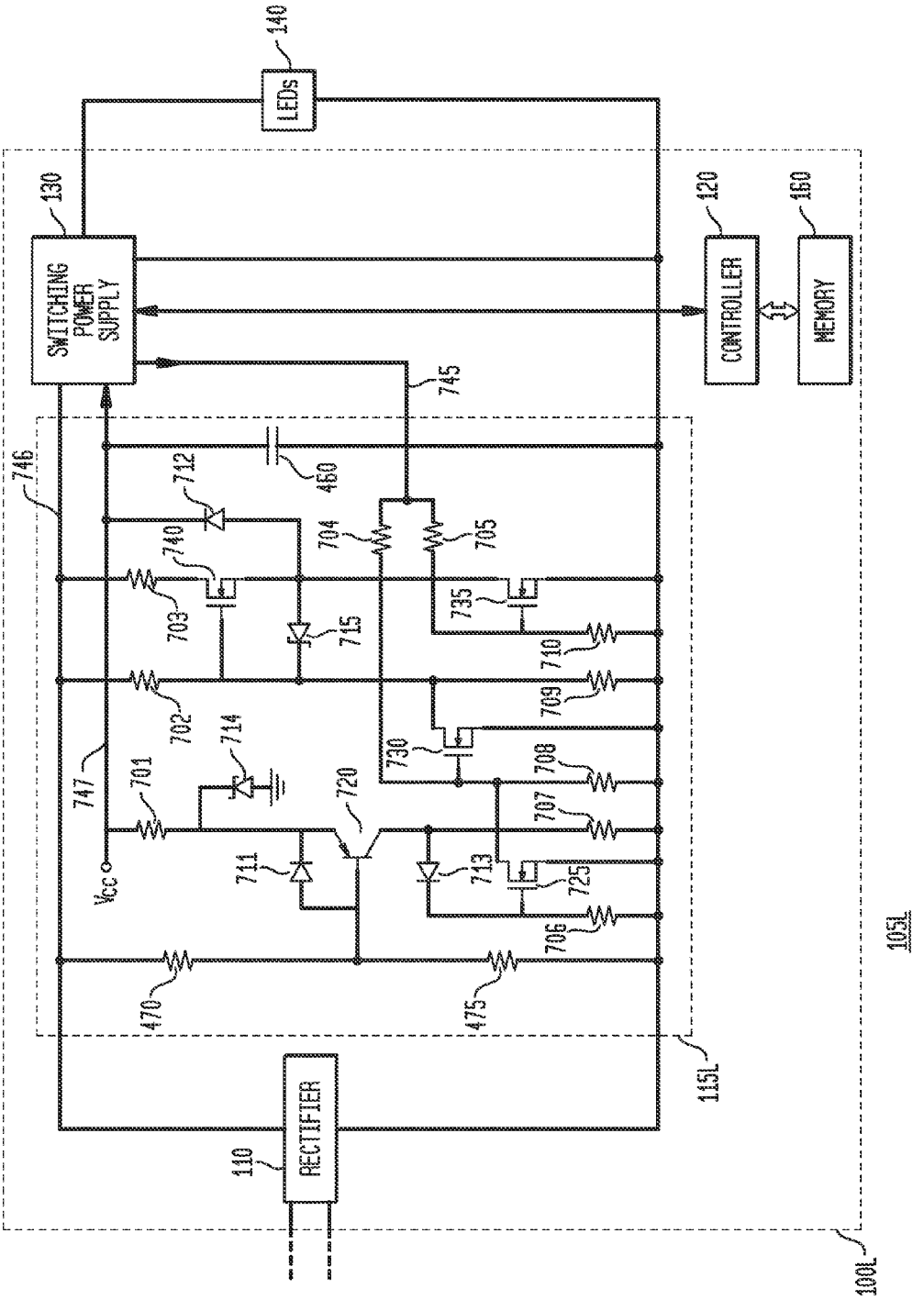
LEDs
140
SWITCHING POWER SUPPLY
130
CONTROLLER
120
MEMORY
160
745
746
460
712
740
704
705
703
715
735
710
702
714
709
730
708
701
720
707
747
711
713
725
706
Vcc
470
475
115L
RECTIFIER
110
105L
100L

FIG. 29

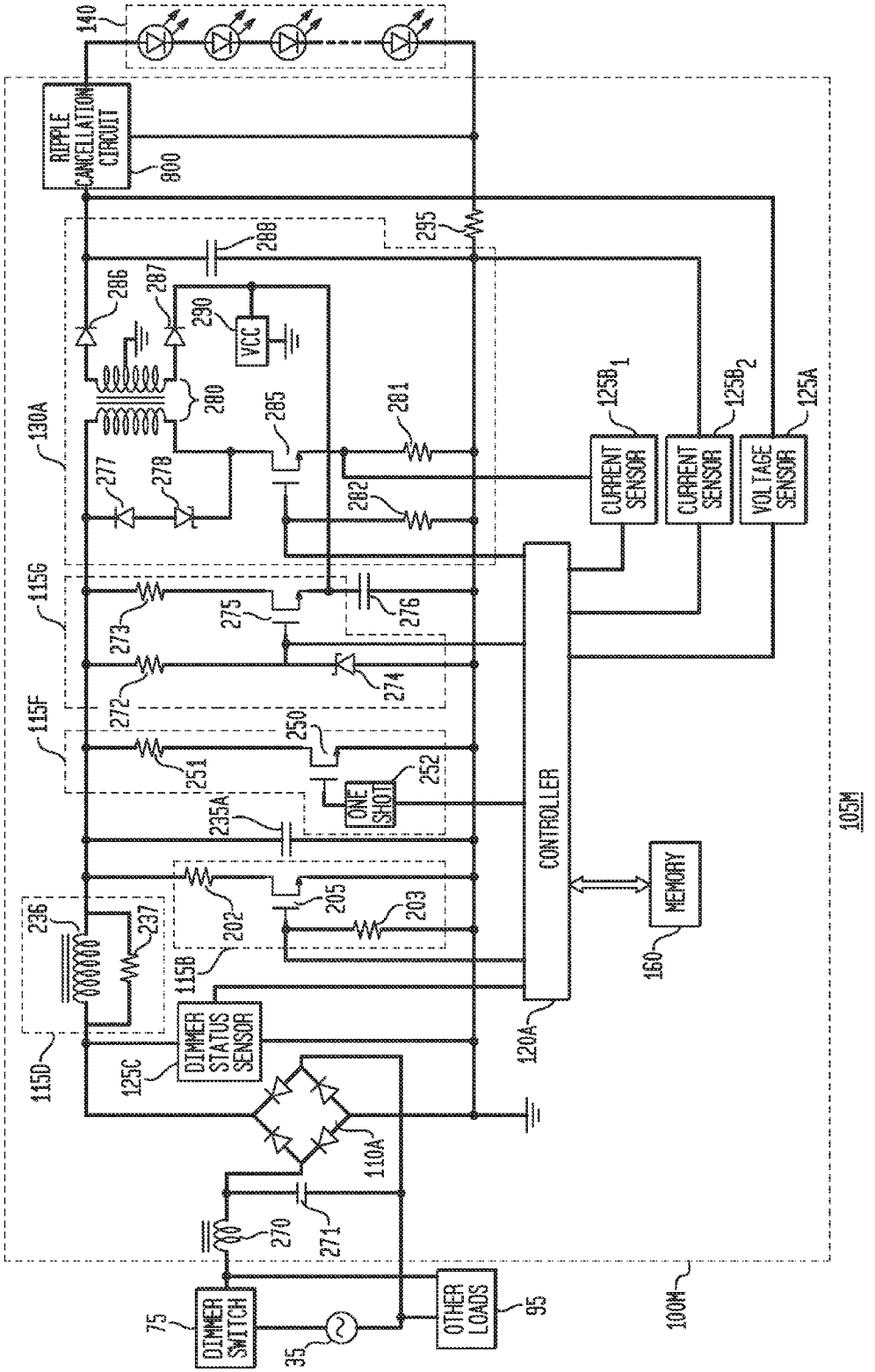
140
RIPPLE CANCELLATION CIRCUIT
800
289
295
286
287
290
VCC
280
130A
285
281
277
279
282
125B1
125B2
125A
CURRENT SENSOR
CURRENT SENSOR
VOLTAGE SENSOR
115G
273
275
276
272
274
115F
250
251
252
ONE SHOT
235A
CONTROLLER
105M
MEMORY
160
236
237
202
205
203
115B
115D
125C
DIMMER STATUS SENSOR
120A
110A
270
271
75
DIMMER SWITCH
35
OTHER LOADS
95
100M

FIG. 30

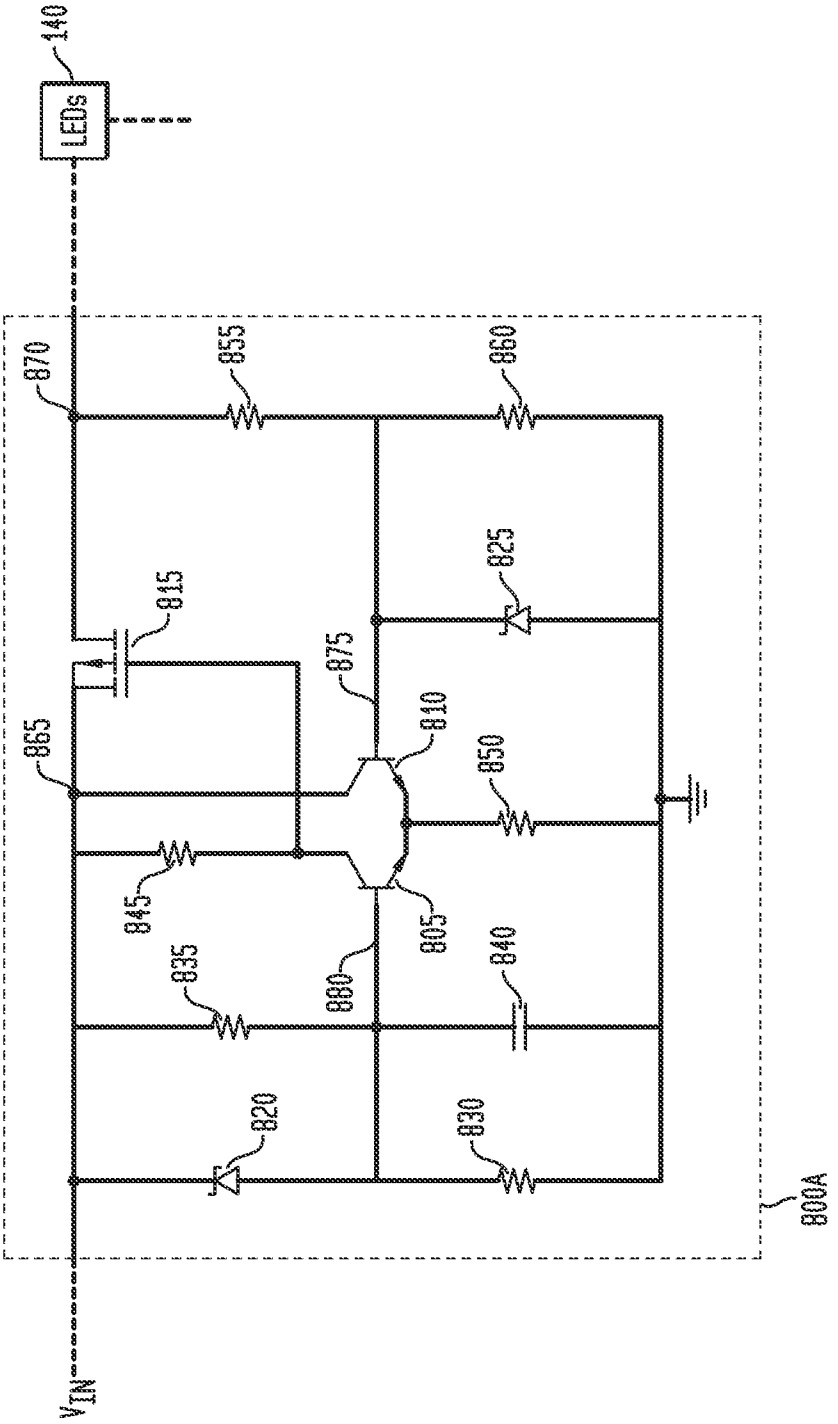
140
LEDs
870
855
860
825
815
875
810
865
850
845
805
835
880
840
820
830
800A
$V_{IN}$

FIG. 31

# POWER CONVERSION APPARATUS AND SYSTEM FOR SOLID STATE LIGHTING

## CROSS-REFERENCE TO RELATED APPLICATIONS

This application is related to and is a divisional of U.S. patent application Ser. No. 12/969,316, filed Dec. 15, 2010, which is a continuation-in-part of U.S. patent application Ser. No. 12/778,767, filed May 12, 2010, now U.S. Pat. No. 8,558,470, which is a continuation-in-part of U.S. patent application Ser. No. 12/639,255, filed Dec. 16, 2009, now U.S. Pat. No. 8,441,210, which is a continuation-in-part of U.S. patent application Ser. No. 11/655,558, filed Jan. 19, 2007, now U.S. Pat. No. 7,656,103, which claims the benefit of U.S. Provisional Patent Application No. 60/760,157, filed Jan. 20, 2006, the disclosures of which are hereby incorporated by reference herein in their entirety.

## BACKGROUND

A wide variety of off-line power supplies for providing power to LEDs are known. Many of these power supplies (i.e., drivers) are effectively incompatible with the existing lighting system infrastructure, such as the lighting systems typically utilized for incandescent or fluorescent lighting, such as infrastructure generally utilizing phase-modulating "dimmer" switches to alter the brightness or intensity of light output from incandescent bulbs. Accordingly, replacement of incandescent lamps by LEDs is facing a challenge: Either do a complete rewiring of the lighting infrastructure, which is expensive and unlikely to occur, or develop new LED drivers compatible with commercially available and already installed dimmer switches. In addition, as many incandescent or other lamps will likely remain in any given lighting environment, it would be highly desirable to enable LEDs and incandescent lamps to be able to operate in parallel and under common control.

Incandescent lamps and LEDs can be connected to a common lamp power bus, with the light output intensity controlled using a composite waveform, having two power components. This is complicated, requires excessively many components to implement, and is not particularly oriented to AC (alternating current) utility lighting.

An off-line LED driver with a power factor correction capability has been described. When coupled with a dimmer, however, its LED regulation is poor and it does not completely support stable operation of the dimmer in the full range of output loads, specifically when both incandescent and LED lamps are being used in parallel.

FIG. **1** is a circuit diagram of a prior art current regulator **50** connected to a dimmer switch **75** which provides phase modulation. FIG. **2** is a circuit diagram of such a prior art (forward) dimmer switch **75**. The time constant of resistor **76** (R1) and capacitor **77** (C1) control the firing angle "α" (illustrated in FIG. **3**) of the triac **80**. The diac **85** is used to maximize symmetry between the firing angle for the positive and negative half cycles of the input AC line voltage **35**. Capacitor **45** (C2) and inductor **40** (L1) form a low pass filter to help reduce noise generated by the dimmer switch **75**. A triac **80** is a switching device effectively equivalent to reverse parallel Silicon Controlled Rectifiers (SCRs), sharing a common gate. The single SCR is a gate controlled semiconductor that behaves like a diode when turned on. A signal at the gate **70** is used to turn the triac **80** on, and the load current is used to hold or keep the triac **80** on. Thus, the gate signal cannot turn an SCR off and it will remain on until the load current goes to zero. A triac **80** behaves like an SCR but conducts in both directions. Triacs have different turn-on thresholds for positive and negative conduction. This difference is usually minimized by using a diac **85** coupled to the gate **70** of the triac **80** to control the turn-on voltage of the triac **80**.



Triacs **80** also have minimum latching and holding currents. The latching current is the minimum current to turn on the triac **80** when given a sufficient gate pulse. The holding current is the minimum current to hold the triac **80** in an on state once conducting. When the current drops below this holding current, the triac **80** will turn off. The latching current is typically higher than the holding current. For dimmer switches that use triacs, capable of switching 3 to 8 A for example, the holding and latching currents are on the order of 10 mA to about 70 mA, also for example and without limitation.

The firing angle (α) of the triac **80** controls the delay from the zero crossing of the AC line, and is theoretically limited between 0° and 180°, with 0° equating to full power and 180° to no power delivered to the load, with a representative phase-modulated output voltage illustrated in FIG. **3** (as a "chopped" sinusoid). A typical dimmer switch, for example, may have minimum and maximum α values of about 25° and 155°, respectively, allowing about 98% to 2% of power to flow to the load compared to operation directly from the AC mains (AC line voltage (**35**)). Similarly, a reverse phase-modulated dimmer will provide an output voltage across a resistive load as illustrated in FIG. **4**, which provides energy to the load at the beginning of each cycle, such as from 0° to 90°, for example, with no energy delivered in the latter part of each cycle (illustrated as interval (β).

Referring to FIG. **2**, the firing angle α is determined by the RC time constant of capacitor **77** (C1), resistor **76** (R1), and the impedance of the load, such as an incandescent bulb or an LED driver circuit (ZLOAD **81**). In typical dimming applications, ZLOAD will be orders of magnitude lower than RI and resistive, thus will not affect the firing angle appreciably. When the load is comparable to RI or is not resistive, however, the firing angle and behavior of the dimmer switch can change dramatically.

Typical prior art, off-line AC/DC converters that drive LEDs using phase modulation from a dimmer switch have several problems associated with providing a quality drive to LEDs, such as: (1) phase modulation from a dimmer switch can produce a low frequency (about 120 Hz) in the optical output, referred to as "flicker," which can be detected by a human eye or otherwise create a reaction in people to the oscillating light; (2) filtering the input voltage may require quite a substantial value of the input capacitor, compromising both the size of the converter and its useful life; (3) when the triac **80** is turned on, a large inrush current may be created, due to a low impedance of the input filter, which may damage elements of both the dimmer switch **75** and any LED driver; and (4) power management controllers are typically not designed to operate in an environment having phase modulation of input voltage and could malfunction.

## SUMMARY

A system of one or more computers can be configured to perform particular operations or actions by virtue of having software, firmware, hardware, or a combination of them installed on the system that in operation causes or cause the system to perform the actions. One or more computer programs can be configured to perform particular operations or actions by virtue of including instructions that, when executed by data processing apparatus, cause the apparatus to

perform the actions. One general aspect includes an apparatus for power conversion, the apparatus couplable to a first switch coupled to an alternating current (AC) power source, the apparatus further couplable to solid state lighting. The apparatus including a switching power supply and a first adaptive interface circuit including a resistive impedance coupled in series to a reactive impedance, where the first adaptive interface circuit is configured to conduct current from the first switch in a first current path in a default mode. The apparatus also includes a second adaptive interface circuit including a second switch coupled to the reactive impedance. The apparatus also includes where the second adaptive interface circuit is configured to conduct current from the first switch in a second current path. The apparatus also includes where at least one of the first and second adaptive interface circuits is configured to damp oscillation when the first switch turns on. Other embodiments of this aspect include corresponding computer systems, apparatus, and computer programs recorded on one or more computer storage devices, each configured to perform the actions of the methods.

Implementations may include one or more of the following features. The apparatus where the first switch is a phase-modulated dimmer switch. The apparatus further including a controller coupled to the second switch, where the controller is configured to modulate the second switch to provide the second current path when the first switch turns on. The apparatus where the controller is further configured to modulate the second adaptive interface circuit to modulate a current of the first switch. The apparatus where the first adaptive interface circuit includes a first resistor coupled in series to a first capacitor. The apparatus where the second adaptive interface circuit further includes a transistor coupled in series to the first capacitor. The apparatus where the second adaptive interface circuit further includes: a voltage divider including a second resistor coupled in series to a third resistor, where the second and third resistors are further coupled to a gate of the transistor. The apparatus may also include a capacitor coupled in parallel to the third resistor. The apparatus where the solid state lighting includes one or more light emitting diodes. The apparatus where the apparatus is couplable through a rectifier to the first switch. The system where the first switch includes a phase-modulated dimmer switch. The system further including a controller coupled to the second adaptive interface circuit, where the controller is configured to modulate the second adaptive interface circuit to provide a current path when the first switch turns on. The system where the controller is further configured to modulate the second adaptive interface circuit to modulate a current of the first switch. The system where the first adaptive interface circuit further includes a first resistor coupled in series to a first capacitor. The system where the second adaptive interface circuit further includes a transistor coupled in series to the first capacitor. The system where the second adaptive interface circuit further includes: a voltage divider including a second resistor coupled in series to a third resistor, the second and third resistors further coupled to a gate of the transistor. The system may also include a capacitor coupled in parallel to the third resistor. The system where the solid state lighting includes one or more light emitting diodes. The system further including a rectifier couplable to the first switch. The apparatus where the first switch includes a phase-modulated dimmer switch. The apparatus further including: a controller coupled to the second switch, where the controller is configured to modulate the second switch to provide the second current path when the first switch turns on. The apparatus where the adaptive interface circuit includes a first resistor coupled in series to a first capacitor. The apparatus where the adaptive interface circuit further includes a transistor coupled in series to the first capacitor. The apparatus where the adaptive interface circuit further includes: a voltage divider including a second resistor coupled in series to a third resistor, the second and third resistors further coupled to a gate of the transistor. The apparatus may also include a capacitor coupled in parallel to the third resistor. The apparatus where the solid state lighting includes one or more light emitting diodes. The apparatus where the apparatus further includes a rectifier couplable to the first switch. Implementations of the described techniques may include hardware, a method or process, or computer software on a computer-accessible medium.

One general aspect includes a system for power conversion, the system couplable to a first switch coupled to an alternating current (AC) power source, the system including a switching power supply. The system also includes solid state lighting coupled to the switching power supply. The system also includes a first adaptive interface circuit including a resistive impedance coupled to a reactive impedance, where the first adaptive interface circuit is configured to conduct current from the first switch in a first current path in a default mode. The system also includes a second adaptive interface circuit including a second switch coupled to the reactive impedance. The system also includes where the second adaptive interface is configured to conduct current from the first switch in a second current path. The system also includes where at least one of the first and second adaptive interface circuits is configured to damp oscillation when the first switch turns on. Other embodiments of this aspect include corresponding computer systems, apparatus, and computer programs recorded on one or more computer storage devices, each configured to perform the actions of the methods.

Implementations may include one or more of the following features. The system where the first switch includes a phase-modulated dimmer switch. The system further including a controller coupled to the second adaptive interface circuit, where the controller is configured to modulate the second adaptive interface circuit to provide a current path when the first switch turns on. The system where the controller is further configured to modulate the second adaptive interface circuit to modulate a current of the first switch. The system where the first adaptive interface circuit further includes a first resistor coupled in series to a first capacitor. The system where the second adaptive interface circuit further includes a transistor coupled in series to the first capacitor. The system where the second adaptive interface circuit further includes: a voltage divider including a second resistor coupled in series to a third resistor, the second and third resistors further coupled to a gate of the transistor. The system may also include a capacitor coupled in parallel to the third resistor. The system where the solid state lighting includes one or more light emitting diodes. The system further including a rectifier couplable to the first switch. The apparatus where the first switch includes a phase-modulated dimmer switch. The apparatus further including: a controller coupled to the second switch, where the controller is configured to modulate the second switch to provide the second current path when the first switch turns on. The apparatus where the adaptive interface circuit includes a first resistor coupled in series to a first capacitor. The apparatus where the adaptive interface circuit further includes a transistor coupled in series to the first capacitor. The apparatus where the adaptive interface circuit further includes: a voltage divider including a second resistor coupled in series to a third resistor, the second and third resistors further coupled to a gate of the transistor. The apparatus may also include a capacitor coupled in parallel to the

third resistor. The apparatus where the solid state lighting includes one or more light emitting diodes. The apparatus where the apparatus further includes a rectifier couplable to the first switch. Implementations of the described techniques may include hardware, a method or process, or computer software on a computer-accessible medium.

One general aspect includes an apparatus for power conversion, the apparatus couplable to a first switch coupled to an alternating current (AC) power source, the apparatus further couplable to a solid state lighting, the apparatus including a switching power supply and an adaptive interface circuit. The adaptive interface circuit also includes a resistive impedance coupled in series to a reactive impedance. The apparatus also includes a second switch coupled to the reactive impedance to conduct current from the first switch in a second current path, where the adaptive interface circuit is configured to damp oscillation when the first switch turns on and conduct current from the first switch in a first current path in a default mode. Other embodiments of this aspect include corresponding computer systems, apparatus, and computer programs recorded on one or more computer storage devices, each configured to perform the actions of the methods.

Implementations may include one or more of the following features. The apparatus where the first switch includes a phase-modulated dimmer switch. The apparatus further including: a controller coupled to the second switch, where the controller is configured to modulate the second switch to provide the second current path when the first switch turns on. The apparatus where the adaptive interface circuit includes a first resistor coupled in series to a first capacitor. The apparatus where the adaptive interface circuit further includes a transistor coupled in series to the first capacitor. The apparatus where the adaptive interface circuit further includes: a voltage divider including a second resistor coupled in series to a third resistor, the second and third resistors further coupled to a gate of the transistor. The apparatus may also include a capacitor coupled in parallel to the third resistor. The apparatus where the solid state lighting includes one or more light emitting diodes. The apparatus where the apparatus further includes a rectifier couplable to the first switch. Implementations of the described techniques may include hardware, a method or process, or computer software on a computer-accessible medium.

Numerous other advantages and features will become readily apparent from the following detailed description, from the claims, and from the accompanying drawings.

## DESCRIPTION OF THE DRAWINGS

Various features and advantages of the present disclosure will be more readily appreciated upon reference to the following disclosure when considered in conjunction with the accompanying drawings, wherein like reference numerals are used to identify identical components in the various views, and wherein reference numerals with alphabetic characters are utilized to identify additional types, instantiations, or variations of a selected component embodiment in the various views, in which:

FIG. **1** is a circuit diagram illustrating a prior art current regulator;

FIG. **2** is a circuit diagram illustrating a representative prior art dimmer switch;

FIG. **3** is a graphical diagram illustrating the phase-modulated output voltage from a standard phase-modulated dimmer switch;

FIG. **4** is a graphical diagram illustrating the phase-modulated output voltage from a reverse phase-modulated dimmer switch;

FIG. **5** is a high-level block and circuit diagram illustrating a generalized prior art current regulator (or converter);

FIG. **6** is a graphical diagram illustrating a triac voltage having a subharmonic start-up frequency in a prior art current regulator coupled to a dimmer switch which causes perceptible LED flicker;

FIG. **7** is a graphical diagram illustrating a triac voltage with a 20K Ohm load and illustrating premature startup in a prior art current regulator coupled to a dimmer switch which causes perceptible LED flicker;

FIG. **8** is a block diagram illustrating a first exemplary apparatus embodiment and a first exemplary system embodiment in accordance with the teachings of the present disclosure;

FIG. **9** is a block diagram illustrating a second exemplary apparatus embodiment, a second exemplary system embodiment, and a second exemplary adaptive interface embodiment in accordance with the teachings of the present disclosure;

FIG. **10** is a flow diagram illustrating a first exemplary method embodiment in accordance with the teachings of the present disclosure;

FIG. **11** is a block and circuit diagram illustrating a third exemplary apparatus embodiment, a third exemplary system embodiment, and a third exemplary adaptive interface embodiment in accordance with the teachings of the present disclosure;

FIG. **12** is a block and circuit diagram illustrating a fourth exemplary apparatus embodiment, a fourth exemplary system embodiment, and a fourth exemplary adaptive interface embodiment in accordance with the teachings of the present disclosure;

FIG. **13** is a graphical timing diagram for exemplary switching of a dimmer switch, an exemplary adaptive interface embodiment, power provided to an exemplary switching power supply, and exemplary adaptive interface power, in accordance with the teachings of the present disclosure;

FIG. **14** is a block and circuit diagram illustrating a fifth exemplary apparatus embodiment, a fifth exemplary system embodiment, and a fifth exemplary adaptive interface embodiment in accordance with the teachings of the present disclosure;

FIG. **15** is a block and circuit diagram illustrating a sixth exemplary apparatus embodiment, a sixth exemplary system embodiment, and a sixth exemplary adaptive interface embodiment in accordance with the teachings of the present disclosure;

FIG. **16** is a block and circuit diagram illustrating a seventh exemplary apparatus embodiment, a seventh exemplary system embodiment, and a seventh exemplary adaptive interface embodiment in accordance with the teachings of the present disclosure;

FIG. **17** is a block and circuit diagram illustrating an eighth exemplary apparatus embodiment and an eighth exemplary system embodiment in accordance with the teachings of the present disclosure;

FIG. **18** is a flow diagram illustrating a second exemplary method embodiment in accordance with the teachings of the present disclosure;

FIG. **19** is a flow diagram illustrating a third exemplary method embodiment in accordance with the teachings of the present disclosure;

FIG. **20** is a graphical diagram illustrating exemplary transient voltage and current waveforms for a switch turn on in a resonant mode;

FIG. **21** is a graphical diagram illustrating exemplary, modeled transient voltage and current waveforms for a fifth exemplary apparatus embodiment, a fifth exemplary system embodiment, and a fifth exemplary adaptive interface embodiment in accordance with the teachings of the present disclosure;

FIG. **22** is a graphical diagram illustrating exemplary, modeled transient voltage and current waveforms for a sixth exemplary apparatus embodiment, a sixth exemplary system embodiment, and a sixth exemplary adaptive interface embodiment in accordance with the teachings of the present disclosure;

FIG. **23** is a graphical diagram illustrating exemplary, modeled transient voltage and current waveforms for a seventh exemplary apparatus embodiment, a seventh exemplary system embodiment, and a seventh exemplary adaptive interface embodiment in accordance with the teachings of the present disclosure;

FIG. **24** is a block and circuit diagram illustrating a ninth exemplary apparatus embodiment, a ninth exemplary system embodiment, and an eighth exemplary adaptive interface embodiment in accordance with the teachings of the present disclosure;

FIG. **25** is a graphical diagram illustrating an exemplary, modeled transient current waveform for a ninth exemplary apparatus embodiment, a ninth representative system embodiment, and an eighth exemplary adaptive interface embodiment in accordance with the teachings of the present disclosure;

FIG. **26** is a block and circuit diagram illustrating a tenth exemplary apparatus embodiment, a tenth exemplary system embodiment, and a ninth exemplary adaptive interface embodiment in accordance with the teachings of the present disclosure;

FIG. **27** is a graphical diagram illustrating exemplary, modeled transient voltage and current waveforms for a tenth exemplary apparatus embodiment, a tenth exemplary system embodiment, and a ninth exemplary adaptive interface embodiment in accordance with the teachings of the present disclosure;

FIG. **28** is a block and circuit diagram illustrating an eleventh exemplary apparatus embodiment, an eleventh exemplary system embodiment, and a tenth exemplary adaptive interface embodiment in accordance with the teachings of the present disclosure;

FIG. **29** is a block and circuit diagram illustrating a twelfth exemplary apparatus embodiment, a twelfth exemplary system embodiment, and an eleventh exemplary adaptive interface embodiment in accordance with the teachings of the present disclosure;

FIG. **30** is a block and circuit diagram illustrating a thirteenth exemplary apparatus embodiment and a thirteenth exemplary system embodiment in accordance with the teachings of the present disclosure; and

FIG. **31** is a block and circuit diagram illustrating an exemplary ripple cancellation circuit embodiment in accordance with the teachings of the present disclosure.

## DETAILED DESCRIPTION

The present disclosure is not intended to limit the claimed subject matter to the specific embodiments illustrated. In this respect, it is to be understood that the disclosure is not limited in its application to the details of construction and to the arrangements of components set forth above and below, illustrated in the drawings, or as described in the examples. Methods and apparatuses consistent with the claimed subject matter are capable of other embodiments and of being practiced and carried out in various ways. Also, it is to be understood that the phraseology and terminology employed herein, as well as the abstract included below, are for the purposes of description and should not be regarded as limiting.

As mentioned above, prior art LED driver circuits are often problematic when utilized with conventional dimmer switches **75**, causing problems such as perceptible flicker and large inrush currents. For example, as illustrated in FIG. **5**, a switching off-line LED driver **90** typically includes a full wave rectifier **20** with a capacitive filter **15**, which allows current to flow to the filter capacitor (CFILT) **15**, when the input voltage is greater than the voltage across the capacitor. The inrush current to the capacitor is limited by the resistance in series with the capacitor. Under normal operating conditions there may be a Negative Temperature Coefficient resistor (NTC) or thermistor in series with the capacitor to minimize inrush current during initial charging. This resistance will be significantly reduced during operation, allowing for fast capacitor charging. This circuit will continuously peak charge the capacitor to the peak voltage of the input waveform, 169 V DC for standard 120 V AC line voltage.

When used with a dimmer switch **75**, however, the charging current of the filter capacitor is limited by the dimming resistance R1 (of resistor **76**) and is ICHARGE=(VIN−VLOAD−VC1)/R1 (FIGS. **2** and **5**). The voltage across the filter capacitor can be approximated to a DC voltage source due to the large difference between C1 **77** and CFILT **15**. The charging current of the filter capacitor is also the charging current for C1, which controls the firing angle of the dimmer. The charging current for C1 will be decreased from normal dimmer operation due to the large voltage drop (VC1) across the filter capacitor **15**. For large values of VC1, the current into C1 will be small and thus slowly charge. As a consequence, and as illustrated in FIG. **6**, the small charging current may not be enough to charge C1 to the diac **85** breakover voltage during one half cycle. If the breakover voltage is not reached 93, the triac **80** will not turn on. This will continue through many cycles until the voltage on the filter capacitor is small enough to allow C1 to charge to the breakover voltage. Once the breakover voltage has been reached 94, the triac **80** will turn on and the capacitor will charge to the peak value of the remaining half cycle input voltage. This phenomenon is illustrated in FIG. **6**, requiring four cycles at 60 Hz **92** for this breakover voltage to be reached, such that the triac **80** only turns on at a subharmonic frequency, e.g., every 15 Hz as illustrated.

When a dimmer switch is used with a load drawing or sinking a small amount of current, such that ILOAD is less than the holding current for all values of the AC input, the triac **80** will provide inconsistent behavior unsuitable for applications with LED drivers. The nominal firing angle will increase due to the increased resistance of ZLOAD **81**. When the capacitor (C1) voltage exceeds the diac breakover voltage, the diac **85** will discharge the capacitor into the gate of the triac **80**, momentarily turning the triac on. Because the load resistance is too high to allow the necessary holding current, however, the triac **80** will then turn off. When the triac turns off, the capacitor C1 begins charging again through R1 and ZLOAD (**81**). If there is enough time remaining in the half cycle, the triac will fire again, and this process repeats itself through each half cycle. Such premature and unsustainable on-states of a triac **80** are illustrated in FIG. **7**, showing the multiple firings (premature startup attempts) **91** of the triac **80** which can cause perceptible LED flicker.

For a prior art power supply in the normal status of operation, one comparatively inefficient, prior art method to pro-

vide for sufficient current through the dimmer switch **75** is to simply use a load resistor, RL, in parallel with (across) the dimmer switch **75**, thereby providing a load current of at least VTRIAC/RL when the triac **80** is firing. By setting the resistor values small enough, the current can be made sufficiently high to ensure that it is above the threshold current (typically in the vicinity of 50 mA~100 mA) needed to keep the triac **80** in an on state. The power dissipation across the resistor RL would be extremely high, i.e., 1202/RL when the phase angle (firing angle $\alpha$) is small, further resulting in creation of significant heat. Such a load resistance is typically provided by an incandescent lamp, but is not automatically provided by an electronic or switchable load, such as a switching LED driver system.

Further, it is not always necessary to add more current to the triac **80** when it is turning on, particularly if multiple lamps are being used (incandescent bulbs or LEDs) which are drawing sufficient current. Thus, in accordance with various exemplary embodiments, instead of a "dummy" resistor RL, active circuitry may be used which is capable of adjusting according to the needs of the dimmer switch **75**. The exemplary embodiments provide current regulation to allow the triac **80** to switch on (fire) and to hold it in an on-state as desired. The exemplary embodiments are also more power efficient, reducing the supplemented current (and therefore **12**R power loss) when there are other loads providing or sinking currents or when the phase angle $\alpha$ is small.

While solid state lighting (such as LED lighting) has significant environmental and energy-saving benefits, their adoption as the lighting technology of choice is less likely if they cannot be integrated into or otherwise made compatible for operation with the existing lighting infrastructure. In accordance with the present disclosure, therefore, an LED driver circuit is provided which is compatible for operation with the existing lighting infrastructure, such as dimmer switches, and may be coupled directly to and controlled by such dimmer switches, regardless of whether other loads, such as additional incandescent or fluorescent lighting, are also coupled to and controlled by such dimmer or other switches. While the exemplary embodiments are illustrated and discussed below with reference to use with dimmer switches **75**, it should be noted that the exemplary embodiments are suitable for use with effectively any types of switching devices or other lighting infrastructure, except potentially those switches or other infrastructure specially designed or implemented for other purposes.

As indicated above, exemplary embodiments described herein not only recognize and accommodate various states of switches, such as phase-modulating dimmer switches, but further utilize a novel insight to also concurrently recognize and accommodate various states of a switching power supply, such that both a phase-modulating dimmer switch and a switching power supply operate together, seamlessly and with substantial stability. More particularly, the exemplary embodiments recognize and accommodate at least three states of a phase modulating dimmer switch, namely, a first state in which the dimmer switch is not conducting but during which a triggering capacitor **77** (C1) is being charged; a second state in which the dimmer switch has turned on and requires a latching current; and a third state in which the dimmer switch is fully conducting and requires a holding current, such as for a triac **80** or thyristor. Concurrently, in combination with the states of the switch, the exemplary embodiments recognize and accommodate at least three states, and in various embodiments, four states, of a switching power supply, namely, a first start-up state of the switching power supply, during which it generates its power supply (VCC voltage level); a second, gradual start state of the switching power supply during which it ramps up its provision of power to a load (such as LEDs) (e.g., through pulse width modulation switching) from start up to a full operational mode; a third state, during which the switching power supply is in a full operational mode; and an optional fourth state, during which the switching power supply may experience an abnormal or atypical operation and enter a protective operating mode. For each combination of states of the switch (e.g., dimmer switch) and switching power supply, using corresponding criteria for stable operation, the exemplary embodiments provide a substantially matching electrical environment to meet such criteria for stable operation of both the switch and the switching power supply, enabling seamless and stable operation of both components. In various exemplary embodiments, the same type of substantially matching electrical environment may be utilized for multiple combinations of states, and in other instances, other types of substantially matching electrical environments will be utilized for a selected combination of states of the switch and switching power supply.

FIG. **8** is a block diagram of a first exemplary apparatus **100** embodiment, and a first exemplary system **105** embodiment in accordance with the teachings of the present disclosure. The apparatus **100** provides power to one or more LEDs **140**, which may be an array or multiple arrays of LEDs **140**, of any type or color, with the apparatus **100** and LEDs **140** forming a first system **105**. The apparatus **100** is compatible with existing lighting infrastructure, and may be coupled directly to a dimmer switch **75** for receiving an AC voltage (potentially phase-modulated or without any modulation) derived from the AC line voltage (AC mains) **35**, and may be constructed to fit within an A19 (e.g., Edison) socket, for example, and without limitation. In addition, the apparatus **100** may operate in parallel with other or additional loads **95**, such as an incandescent lamp or other LEDs **140**, under the common control of the dimmer switch **75**.

More generally, the apparatus **100** may be utilized with any existing lighting infrastructure. In addition, it may not be known (such as by a manufacturer) in advance how the apparatus **100** and system **105** will be deployed by the end user, so such compatibility with any existing lighting infrastructure is a true advantage of the exemplary embodiments of the disclosure. For example, a manufacturer, distributor, or other provider of an apparatus **100** will typically not know in advance the types of switches to which the apparatus **100** and system **105** may be coupled (e.g., to a dimmer switch **75**, or a non-dimming switch), whether other loads **95** may be present, and if so, what types of loads (e.g., incandescent, LED, fluorescent, etc.).

As illustrated, the apparatus **100** comprises one or more sensors **125**, one or more adaptive interfaces **115**, a controller **120**, a switching power supply (or driver) **130**, a memory (e.g., registers, RAM) **160**, and typically may also comprise a rectifier **110**, depending on the type of switching power supply **130** utilized. Embodiments or other implementations for a controller **120** (and any of its variations, such as **120**A, illustrated below) and a memory **160** are described in greater detail below. The one or more sensors **125** are utilized to sense or measure a parameter, such as a voltage or current level, with voltage sensors **125**A and current sensors **125**B illustrated and discussed below. For purposes of the present disclosure, it may be assumed that a rectifier **110** is present, and those having skill in the art will recognize that innumerable other variations may be implemented. The switching power supply **130** and/or the controller **120**, in exemplary embodiments, may also and typically will receive feedback from the

LEDs **140**, as illustrated. One or more adaptive interfaces **115** may be different types and may be placed in a wide variety of locations within the apparatus **100**, depending upon the selected embodiment, such as between the rectifier **110** and the dimmer switch **75**, in addition to between the rectifier **110** and the switching power supply **130**, or in parallel with the switching power supply **130**, or within the switching power supply **130** (and more generally, an adaptive interface **115** may have any of the illustrated circuit locations, such as in series or in parallel with the rectifier or switching power supply (or driver) **130**, for example, and without limitation), as illustrated in FIG. **8**. Exemplary adaptive interfaces **115** and/or their components may be implemented generally using active or passive components, or both. One or more sensors **125** also may be different types and may be placed in a wide variety of locations within the apparatus **100**, depending upon the selected embodiment, such as voltage sensors **125**A for detection of various input and/or output voltage levels, or current sensors **125**B for detection of inductor current levels (e.g., within switching power supply **130**) and/or LED **140** current, such as the various sensors **125** described in greater detail below. It should also be noted that the various components, such as controller **120**, may be implemented in analog or digital form. The rectifier **110** may be any type of rectifier, including without limitation, a full-wave rectifier, a full-wave bridge, a half-wave rectifier, an electromechanical rectifier, or another type of rectifier as known or becomes known in the art. The apparatus **100** and system **105** also may be implemented in any form, including in forms compatible with A19 (Edison) or T8 sockets, for example.

In accordance with exemplary embodiments, dynamic control over the one or more adaptive interfaces **115** is implemented, to account for both the current state (or timing cycle) of the switching power supply **130** and the current state (or timing cycle) of the dimmer switch **75**, to provide for substantially stable operation of the apparatus **100** and system **105** without incurring the various forms of flicker or other malfunctions discussed above. Stated another way, a matching electrical (or electronic) environment is provided for each state of the dimmer switch **75** (non-conducting and charging a triggering capacitor, turning on with a latching current, and on and conducting with a holding current) in conjunction with each state of the switching power supply **130**, such as a start-up state, a gradual or soft-start power state, a full operational mode power state, and a protective-mode state. For example, assuming that a dimmer switch **75** is installed and is not accessible directly to any sensing and functional manipulations, an exemplary method embodiment provides for interfacing of a phase modulated dimmer switch **75** and a switching power supply **130** by controlling the functionality of the switching power supply **130** in an adaptive timely manner while concurrently recognizing the current process in the dimmer switch **75**, and providing a substantially matching electrical environment for a stable completion of this dimmer **75** process and transition to another dimmer switch **75** process, such as transitioning from a charging process to a turning-on process to a conducting process. Also, for example and without limitation, a substantially matching electrical environment may be provided by controlling the switching power supply **130** (e.g., controlling a resonant process and current shaping), or by controlling an input impedance of the switching power supply **130**, or controlling an input current to the apparatus **100**, or by controlling an input power of the switching power supply **130**, including control by shutting down the switching power supply **130**.

FIG. **9** is a block diagram of a second exemplary apparatus embodiment **100**A, a second exemplary system embodiment **105**A, and a second exemplary adaptive interface embodiment **115**A in accordance with the teachings of the present disclosure. In addition to the components previously discussed with reference to the first exemplary apparatus embodiment **100**, the second exemplary apparatus embodiment is also illustrated as optionally comprising filter capacitor **235**, discussed in greater detail below. As illustrated in FIG. **9**, an exemplary adaptive interface **115**A comprises one or more of five interface circuits, namely, a start-up interface circuit **200**, a gradual or soft-start power interface circuit **210**, a full-operation interface circuit **220**, a resonant-process interface circuit **195**, and a protective mode interface circuit **230**. In any selected embodiment, it should be noted that the five interface circuits **195**, **200**, **210**, **220**, and/or **230** may share common circuitry or be implemented using the same circuitry, in addition to potentially comprising separate circuits, and may share common control parameters in some instances as well. While illustrated as located between a rectifier **110** and the switching power supply **130**, as discussed above, the exemplary adaptive interface **115**A and/or its component interfaces **195**, **200**, **210**, **220**, and/or **230** may have any of various circuit locations within an apparatus **100**A, in addition to or in lieu of those illustrated.

As mentioned above, concerning the exemplary adaptive interface **115**A, we can distinguish at least four independent functional phases or states of the switching power supply **130**, in conjunction with at least three operational states of a dimmer switch **75**. The exemplary adaptive interface **115**A recognizes and accommodates the various combinations of states of the dimmer switch **75** and the switching power supply **130** using one or more of the component interfaces **195**, **200**, **210**, **220**, and/or **230**. During switching power supply **130** start up, exemplary start-up interface circuit **200** is utilized for creating an operational voltage (VCC) for a power supply controller **120**, during which all other switching power supply **130** circuits are disabled and energy consumption is comparatively small, and for providing or allowing sufficient current to the dimmer switch **75** for any of its three states. During a gradual or soft start for supplying power by the switching power supply **130**, as an electrical process of supplying increasing levels of energy to the output load (LEDs **140**), and energy consumption is comparatively small energy, gradual or soft start power interface circuit **210** is utilized to allow both ramping up of output energy and sufficient current to the dimmer switch **75** for any of its three states. During full operation of the switching power supply **130**, having nominal energy consumption, resonant process interface circuit **195** and full operation interface circuit **220** are utilized to provide current shaping (generally controlling input current levels) and also allow sufficient current to the dimmer switch **75** for any of its three states. A protective mode of operation, in which the switching power supply **130** or its various components are shut down and energy consumption is comparatively small, is also implemented using protective mode interface circuit **230**, which, depending upon the selected embodiment, may also effectively shut down the dimmer switch **75** or may allow sufficient current to the dimmer switch **75** for any of its three states.

By controlling the adaptive interface **115** and/or its component interfaces **195**, **200**, **210**, **220**, and/or **230**, the various processes (or states) of the dimmer switch **75** are also controlled, including, without limitation: (a) the charging of the triggering capacitor **77** (C1) and firing of the diac (D1) **85** (and, in order to preserve the dimmer switch **75** mechanical position (value of R1) related to the desired dimming level provided by the user, the external impedance of charging circuit (input impedance of the apparatus) is substantially

close to one provided by an incandescent bulb (e.g., ZLOAD **81**), and no energy is supplied to the power supply); (b) turning on of the dimmer switch **75** (e.g., triac **80**) with a substantially minimum current nonetheless sufficient to exceed the triac **80** latching current, which involves a transient input to the apparatus **100** from zero power to any power sourced by AC line **35**; and (c) conducting current through the dimmer switch **75** (triac **80**) through the end of the current AC cycle (e.g., until zero voltage during the phase a, which may be referred to equivalently (although inexactly) as a zero crossing) with a current as may be needed and nonetheless sufficient to exceed the triac **80** holding current with any power sourced by the AC line to the switching power supply **130**. For a reverse dimmer, the charging process ((a) above) generally follows the conducting process ((c) above), and those having skill in the art will recognize the application of the exemplary embodiments and principles taught herein to such situations.

FIG. **10** is a flow diagram of a first exemplary method embodiment in accordance with the teachings of the present disclosure. The various states of the switching power supply **130** and the dimmer switch **75** may be viewed as forming a matrix, such that the functionality of the switching power supply **130** is controlled in a timely and adaptive manner, recognizing the current process of the dimmer switch **75**, the current state of the switching power supply **130**, and providing a corresponding substantially matching electrical environment for substantially stable operation of the dimmer switch **75**, the provision of appropriate power to the LEDs **140**, and the corresponding substantially stable transition from state to state. Referring to FIG. **10**, the method begins with the turning on of the AC line, such as by a user mechanically turning on a dimmer switch **75**, start step **300**. The apparatus **100**, **100**A (or the other apparatus embodiments discussed below) (and/or the controller **120**, **120**A) then determines the functional status of the switching power supply **130**, whether it is in any of the four states mentioned above, a protective mode, full operational mode, gradual or soft start mode, or by default in a start-up mode (steps **302**, **304**, **306**, and **308**). For each of these possible states of the switching power supply **130**, a state of the dimmer switch **75** is determined (e.g., through one or more sensors **125**) and a corresponding substantially matching electrical environment is provided for the combination of states of both the switching power supply **130** and the dimmer switch **75**. Stated another way, for each of four states of the switching power supply **130**, one or more substantially matching electrical environments is provided when the triggering capacitor **77** (C1) is being charged (steps **310**, **316**, **322**, and/or **328**), or when the dimmer switch **75** (triac **80**) is turning on (steps **312**, **318**, **324**, and/or **330**), or when current is being conducted through the dimmer switch **75** (steps **314**, **320**, **326**, and/or **332**). Following steps **314**, **320**, **326**, and/or **332**, the method determines whether the AC line (dimmer switch **75**) has been turned off, step **334**, and if not, the method returns to step **302** and iterates, and if so, the method may end, return step **336**. As a consequence, the apparatus **100**, **100**A (or the other apparatus embodiments discussed below) provides a substantially matching electrical environment corresponding to both the state of the dimmer switch **75** and the switching power supply **130**. The various combinations of states, monitoring of states, and provision of substantially matching electrical environments is discussed in greater detail below.

For each of these 12 combinations of states or processes, and depending on the intended deployment (e.g., 110 V, 220 V), corresponding parameters are predetermined and stored in memory **160**, and then in subsequent operation, are retrieved from the memory **160** and utilized by the controller **120** to provide the corresponding substantially matching electrical environment. As mentioned above, a substantially matching electrical environment may be provided by the controller **120** by controlling the switching power supply **130** (e.g., controlling a resonant process, current shaping, and other methods discussed below), or by controlling an input impedance of the switching power supply **130**, or controlling an input current to the apparatus **100**, or by controlling an input power of the switching power supply **130**, including control by shutting down the switching power supply **130**, for example and without limitation. It should be noted, however, that for various combinations of states, the corresponding parameters and/or types of control may be substantially similar or the same, depending on the selected embodiment. The corresponding parameters and/or types of control may be determined in a wide variety of ways, such as based upon minimum voltage levels for any and/or all countries, component values, maximum voltage levels to be tolerated by a switching power supply **130** and/or LEDs **140**, characteristics of dimmer switches **75** (such as minimum holding and latching currents), etc., with exemplary methods of predetermining corresponding parameters discussed in greater detail below. For example and without limitation, a minimum current parameter (e.g., 50 mA) may be utilized and sensed via a current sensor **125**B, with a controller **120**, **120**A then providing corresponding gating or modulation of the various switches and other circuits comprising an adaptive interface **115** to ensure such minimum current flow. Accordingly, as the dimmer switch **75** and switching power supply **130** change their respective functional statuses, the inventive method implemented by an apparatus **100**, **100**A-G (or the other apparatus embodiments discussed below) automatically adapts and adjusts using a new set of corresponding parameters for the corresponding combination of states of the dimmer switch **75** and switching power supply **130**.

For example, a method of interfacing a power supply **130** powered through a dimmer switch **75** during the start-up state of an apparatus **100**, **100**A-G (switching power supply **130**) by providing a substantially matching electrical environment, may comprise the following sequence (FIG. **10**, steps **310**-**314**):

1. Monitoring the status of the dimmer switch **75** (steps **310**-**314**).
2. Recognizing that the dimmer switch **75** status is that of charging its triggering capacitor **77** (step **310**).
3. Providing a comparatively low impedance to the dimmer switch **75** (steps **310**-**314**), thereby allowing sufficient current to flow to charge the triggering circuitry, and further effectively emulating an incandescent lamp. For example, the provided impedance can be constant with a maximum value to create current at dimmer switch **75** turn on slightly exceeding the latching and holding current thresholds (steps **312**-**314**). The matching impedance, in the case of an available independent control voltage, can be adaptive, changing its value based on triggering circuit charge time to sink the current slightly over latching and holding current thresholds, which may be correspondingly defined at the values of instantaneous AC voltage at dimmer turn on.
4. Sensing when the dimmer switch **75** is turned on and conducting, and continuing to provide the matching impedance to the dimmer switch **75** to sink current slightly over holding current threshold (step **312**).
5. Starting a process of building an operational voltage for the apparatus **100**, **100**A-G (by active or passive circuits), such as to provide an operating voltage (VCC) to

the controller **120**. The provided matching interface impedance(s) will remain activated through this process which may take a few complete sequential cycles of the dimmer switch **75**, namely, charging the triggering capacitor **77**, turning the dimmer switch **75** (triac **80**) on, and conducting current through the dimmer switch **75** (steps **310-314**).

6. Monitoring the level of the operational voltage of the apparatus **100**, **100**A-G.
7. At a power on reset threshold voltage level, enabling the controller **120** and transitioning to the gradual or soft start of the switching power supply **130**.
8. Continuing providing a matching impedance(s) to the dimmer switch **75** to charge triggering capacitor, turn on the dimmer switch **75**, and adaptively sink sufficient current over the latching, and then holding current thresholds during the transition to gradual or soft start (steps **310-314**).

Accordingly, during start up of the apparatus **100**, **100**A-G and its incorporated switching power supply **130**, for any state of the dimmer switch **75**, an interface circuit (e.g., **115**, **200**, **210**, and/or the others discussed below) is utilized for providing an appropriate impedance to allow sufficient current for the corresponding state of the dimmer switch **75**, thereby generating a corresponding, substantially matching electrical environment for each combination of states.

FIG. **11** is a block and circuit diagram of a third exemplary apparatus embodiment **10013**, a third exemplary system embodiment **105**B, and a third exemplary adaptive interface embodiment **115**B in accordance with the teachings of the present disclosure. Not separately illustrated, the apparatus **100**E may be coupled to a dimmer switch **75** and an AC line **35** as previously illustrated in FIGS. **8** and **9**. For example, and without limitation, the third exemplary adaptive interface embodiment **115**B may be utilized during start up, gradual or soft start, and other processes (and states of the switching power supply **130**), and may be utilized to implement either or both a start-up interface circuit **200**, a gradual or soft start power interface circuit **210**, and/or a full operation interface circuit **220**, for example and without limitation. Referring to FIG. **11**, third exemplary adaptive interface embodiment **115**B comprises a resistive impedance (resistor **202**), switch **205** and optional resistor **203**, with the resistor **202** connected to the dimmer switch **75** (and in parallel with the switching power supply **130**) by the switching of a switch (depletion mode MOSFET) **205**, which is on and conducting without the provision of any control signal from the controller **120**, providing a comparatively low impedance as a substantially matching electrical environment and further providing the comparatively low impedance as a default mode, such as during VCC generation (steps **310-314**) or during gradual or soft start (steps **316-320**). Providing such a comparatively low impedance as a default mode serves to ensure that the dimmer switch **75** functions properly and has sufficient trigger capacitor charging, latching, and holding currents, provided through the resistive impedance (resistor **202**) and switch **205**, such as when the controller **120** and switching power supply **130** are generating their respective operational voltages and may not yet be fully functional, e.g., when the dimmer switch **75** is initially turned on by a user. If during this initial start-up time interval the controller **120** has an independent voltage source (such as a battery) or it develops an operational voltage, the controller **120** may change (adapt) this impedance to the optimal conditions for dimmer performance, as may be sensed by a voltage and/or current sensor **125**A, **125**B. Following such start up, the controller **120** may provide a control signal to the gate of the switch (MOSFET) **205**, such as to modulate the current flow through resistor **202** and switch **205**, such as for gradual or soft start power mode of the switching power supply **130**, or to decrease or terminate the additional current flow-through adaptive interface embodiment **115**B, such as during full operational mode of the switching power supply **130** when sufficient current may be drawn by the switching power supply **130**. Those skilled in the art, using principles of this disclosure, may suggest a variety of other circuits to provide a comparatively low resistive impedance to the dimmer without any control signal for such a start-up process and a default mode.

During gradual or soft start of the system **105**B (FIG. **11**), the controller **120** ramps up power to the load (LEDs) **140** compatible with the stable operation of the apparatus **100**B (and other apparatuses **100**, **100**A, **100**C-G). Typically at or during gradual or soft start, the operating switching frequency, output voltage and output current are increasing. A significant parameter for the adaptive interface **115**B is increasing input power to the switching power supply **130** from levels below the matching of the minimum needs of the dimmer switch **75** to the levels far exceeding that minimum level to provide power to the LEDs **140**. An exemplary method of a gradual or soft start up of a switching power supply **130** powered by a dimmer switch **75**, by providing a substantially matching electrical environment to the dimmer switch **75**, such as using interface **115**B providing a resistive impedance, may comprise the following sequence (FIG. **10**, steps **316-320**):

1. Transitioning from a start-up stage to a gradual or soft start stage asynchronously to the state of the dimmer switch **75**, i.e., gradual or soft start may commence regardless of the state of the dimmer switch **75**, such as when the dimmer switch **75** is in any one of its three cyclical states of charging its triggering capacitor, turning on the dimmer switch **75**, or conducting current through the dimmer switch **75**.
2. Continuing providing (via an adaptive interface **115**) a substantially matching electrical environment (as with the case for the power supply **130** start up), such as using interface **115**B, to keep the dimmer switch **75** operation stable in each of its possible three states until the input voltage is substantially zero (e.g., a zero crossing).
3. Monitoring the status of the dimmer switch **75** after a zero crossing, such that if the dimmer switch **75** is off (a forward dimmer), providing a matching resistive impedance to the triggering circuit of the dimmer **75** via an adaptive interface **115**, and if the dimmer switch **75** is on (a reverse dimmer), providing a matching adaptive power sink to the dimmer via an adaptive interface **115**. The total matching power sink to the dimmer switch **75** is equal to the sum of input power of the switching power supply **130** and additional power consumed by an adaptive interface **115**. Exemplary matching adaptive power sinks are discussed in greater detail below with reference to FIGS. **14-16**.
4. Monitoring a change of the dimmer switch **75** status from charging to turning on and conducting current for a forward dimmer and providing a matching adaptive power sink to the dimmer switch **75** via an adaptive interface **115** and providing a matching resistive impedance to a triggering circuit of a reverse dimmer.
5. Cyclically changing the dimmer matching electrical environment compatible with and corresponding to the dimmer switch **75** cyclical status.
6. Phasing the additional current drawn by an adaptive interface **115** to zero as input power of the switching

power supply **130** increases and goes over a minimum level for ongoing stable operation of the dimmer switch **75**.

7. Transitioning to a full operation power mode and discontinuing operations of applicable adaptive interfaces **115** as necessary or desirable.

Accordingly, during gradual or soft start of the apparatus **100**, **100**A-G and its incorporated switching power supply **130**, for any state of the dimmer switch **75**, an interface circuit (e.g., **200**, **210**, and/or the others discussed below) is utilized for providing an appropriate impedance to allow sufficient current for the corresponding state of the dimmer switch **75** and to provide current shaping/control during dimmer turn on (as discussed in greater detail below), thereby generating a corresponding, substantially matching electrical environment for each combination of states. As the switching power supply **130** ramps up to a full operational mode, the additional current sinking provided by the adaptive interface **115** is decreased, while concurrently maintaining sufficient current through the dimmer switch for any of its charging, turning on, and conducting states.

FIG. **12** is a block and circuit diagram of a fourth exemplary apparatus embodiment **100**C, a fourth exemplary system embodiment **105**C, and a fourth exemplary adaptive interface embodiment **115**C in accordance with the teachings of the present disclosure. Not separately illustrated, the apparatus **100**C may be coupled to a dimmer switch **75** and an AC line **35** as previously illustrated in FIGS. **8** and **9**. FIG. **13** is a graphical timing diagram for exemplary switching of a dimmer switch, an exemplary adaptive interface **115** embodiment, power provided to an exemplary switching power supply **130**, and exemplary adaptive interface power utilization, in accordance with the teachings of the present disclosure. For example and without limitation, the fourth exemplary adaptive interface embodiment **115**C may be utilized during both start up and gradual or soft start processes for any state of the dimmer switch **75** (steps **310**-**320**), may be utilized during full operational mode (step **322**), and may be utilized to implement either or both a start-up interface circuit **200** and/or a gradual or soft start power interface circuit **210**, for example and without limitation. The fourth exemplary adaptive interface embodiment **115**C comprises a matching resistive impedance **207** and **208** connected to the dimmer switch **75** by a switch (MOSFET) **215**, to provide a substantially matching electrical environment for the dimmer switch **75** (for any of its three states) during start up and/or during gradual or soft start of the switching power supply **130**. This matching resistive impedance can be either constant by using a gate-to-source voltage defined by an optional zener diode **211**, or variable and driven by a control voltage from controller **120**. The dimmer switch **75** status is sensed by the voltage sensor **125**A in this exemplary embodiment. When the dimmer switch **75** is turning on, the controller **120** regulates the current sink circuit formed by resistors **207**, **208**, **212**, **213**, and switch (MOSFET) **215**. The adaptive interface **115**C is effectively regulating the input power to the system **105**C such that the minimum current to be put through the dimmer switch **75** for its stable operation is exceeded. As gradual or soft start of the switching power supply **130** progresses to its full operational state and when the dimmer switch **75** is on and conducting, the additional power consumed by an adaptive interface **115**C is gradually phased out to zero, as illustrated in FIG. **13**.

Accordingly, during either start up or gradual or soft start states of the switching power supply **130**, an adaptive interface **115**, such as **115**B or **115**C, provides a corresponding and substantially matching electrical environment to the dimmer switch **75**, such as a constant or variable impedance allowing sufficient current through the dimmer switch **75** to be greater than or equal to a latching or holding current (when the dimmer is turning on or is in an on state, steps **312**, **314**, **318**, and/or **320**) and to provide a current path for charging the triggering capacitor (when the dimmer is in an off or non-conducting state, FIG. **10**, steps **310**, **316**). During full operational mode of the switching power supply **130**, such a substantially matching electrical environment to the dimmer switch **75**, such as a constant or variable impedance, may also be used to provide a current path for charging the triggering capacitor (when the dimmer is in an off or non-conducting state, FIG. **10**, step **322**)

A substantially matching electrical environment is also provided, actively (dynamically) or passively, during the full operational mode of the switching power supply **130**. In various exemplary embodiments, a resonant mode is created for controlling an inrush, peak current when the dimmer switch **75** turns on, which is further actively modulated to avoid excessive current levels while concurrently maintaining minimum latching and holding currents for the dimmer switch **75**, as discussed in greater detail below. Referring again to FIG. **9**, an optional filter capacitor **235** may be implemented to provide power factor correction, for example. The filter capacitor **235** may be connected after the rectifier **110** as illustrated, or between the rectifier **110** and the dimmer switch **75**. Inclusion of such a filter capacitor **235**, however, can serve to extend and delay the charging time for the triggering capacitor **77**. Various modeling has shown, for example, that a 3.4 ms delay for charging the triggering capacitor **77** when connected to an incandescent bulb may be extended to 4.2 ms when such a filter capacitor **235** is utilized, potentially leading to non-triggering of the diac **85** due to a low voltage on triggering capacitor **77**, even after one-half cycle of charging. To avoid undue delay in charging of the triggering capacitor **77**, in accordance with the exemplary embodiments, the capacitance of the filter capacitor **235** should not exceed the capacitance of the triggering capacitor **77** by more than three orders of magnitude. In an exemplary embodiment, the filter capacitor **235** is comparatively small, on the order of about 0.5-2.5 μF, and more particularly on the order of about or substantially 0.1-0.2 μF in various exemplary embodiments, as a larger filter capacitor **235** would interfere with charging of the triggering capacitor **77**.

Use of such a comparatively small filter capacitor **235**, however, without additional components provided in the exemplary novel embodiments and discussed below, would allow for a substantial and potentially excessive peak current into the switching power supply **130** when the dimmer switch **75** is turned on, which may be harmful to the switching power supply **130**, among other things. Accordingly, to avoid such a peak inrush current, exemplary embodiments of the disclosure create and modulate a resonant process during full operational mode of the switching power supply **130** when the dimmer switch **75** is turning on (FIG. **10**, step **324**), such as by using an adaptive interface **115**D, **115**E, and/or **115**F, as illustrated and discussed in greater detail below with reference to FIGS. **14**-**16** and FIGS. **20**-**23**. Such creation and modulation of a resonant process may also be utilized during other states of the switching power supply **130** and dimmer switch **75**, such as during gradual or soft start when the dimmer switch **75** is turning on (step **318**) and otherwise during the transition from gradual or soft start to full operational mode.

Exemplary apparatus **100**B and **100**C also comprise a voltage sensor **125**A which may be utilized to sense the status of the dimmer switch **75**. Alternatively, other types of sensors **125** may also be utilized equivalently to determine the status

of the dimmer switch **75**. When the sensor **125** indicates that the dimmer switch **75** is off due to zero voltage of a forward dimmer or the dimmer turning off for a reverse type of dimmer, the voltage across the input filter capacitor **235** drops to a very small value. At about this time, during full operational mode, the controller **120** turns on at least one switch of the switching power supply **130** (e.g., **285** in FIG. **17**) which is series connected to the input via at least one magnetic winding (and as illustrated by the primary winding of flyback transformer **280** in FIG. **17** or an inductor such as inductor **236** of FIGS. **14-16**). Due to the comparatively small values of the capacitance of the filter capacitor **235** and inductance of inductors in the switching power supplies working in the practical range of frequencies from 50 kHz to 1 MHz, the external impedance to charge the triggering capacitor **77** is comparatively small and is in the range of an incandescent bulb value, thereby allowing sufficient current to charge the triggering capacitor **77** (FIG. **10**, step **322**). Accordingly, during full operational mode and the transition to full operational mode from gradual or soft start, during charging of the triggering capacitor **77**, circuits within the switching power supply **130** may be utilized to ensure sufficient charging current (in addition to ensuring sufficient latching and holding currents), without requiring additional resistive impedances or current sinks, etc., to draw additional current for this purpose.

An exemplary first method of operating an apparatus having a switching power supply **130** and an input filter capacitor **235** (having a comparatively low capacitance, i.e., a small capacitor) during a full operation mode and when powered by a dimmer switch **75**, by providing a substantially matching electrical environment to the dimmer switch **75**, may comprise the following sequence (FIG. **10**, step **322**):

1. Monitoring the status of the dimmer switch **75**.
2. When the dimmer switch **75** has turned off, turning on the primary switch of the switching power supply **130** in a first switching mode with a substantially maximum practical duty cycle (up to 100%) (FIG. **10**, step **322**) (and also effectively providing an additional current path to allow charging of the triggering capacitor, such as using an adaptive interface **115**, as may be necessary or desirable, for example, based on monitoring of voltage or current levels (e.g., **115**B, **115**C)). For such charging of the triggering capacitor during full operational mode, it should be noted that components internal to the switching power supply **130** may be utilized to provide the current path to allow such charging, rather than other additional components.
3. Continuing switching the switching power supply **130** in the first mode with the substantially maximum duty cycle if it is less than one-hundred percent (100%), or keeping it in a DC mode if it is 100%.
4. When the dimmer switch **75** turns on, operating the switching power supply **130** in a second switching mode having the duty cycle determined by feedback from the switching power supply **130**, such as via voltage or current sensors **125**A, **125**B, or feedback from another circuit component, such as LED **140** current.

As mentioned above, a magnetic winding of some kind, such as an inductor **236** or transformer, will be connected in series to the rectifier **110** at some point during the switching cycle of the switching power supply **130**. Inclusion of such a filter capacitor **235** and magnetic winding (inductor **236**) may serve to reduce the reliability of the performance of a dimmer switch **75** without the introduction of a corresponding substantially matching electrical environment in accordance with the exemplary embodiments, using methods in addition to those discussed for the start up and gradual or soft start functional phases of the switching power supply **130**, to provide for a more optimal performance of the switching power supply **130** during full operational mode (following gradual or soft start).

FIG. **20** is a graphical diagram illustrating exemplary voltage and current waveforms for a switch turn on in a resonant mode if an inductor or other magnetic winding, without additional circuitry, is included, such as for the circuit of FIG. **14** if resistor **237** were not included (contrary to various exemplary embodiments). While the peak current **611** and voltage **612** waveforms are damped oscillations and by including an inductor **236** are now below excessive current levels, during the time interval of t3 to t4, another problem may be created, as the illustrated modeling indicates that dimmer switch **75** current is substantially zero, potentially resulting in a malfunction of the dimmer switch **75** and causing perceptible flicker.

Various experimental modeling and theoretical analyses indicate, however, that with typical inductance and capacitance values of a prior art switching power supply, because the filter capacitor **235** is likely discharged by the time the dimmer switch **75** turns on, the turning on of the dimmer switch **75** will produce transient voltage and current levels which may create an unstable, oscillatory interface with the dimmer switch **75**. To avoid such an unstable, oscillatory interface with the dimmer switch **75**, a substantially matching electrical environment is introduced in accordance with the exemplary embodiments, using an adaptive interface **115**D which shapes or otherwise alters the current provided through the dimmer switch **75**. FIG. **14** is a block and circuit diagram of a fifth exemplary apparatus embodiment **100**D, a fifth exemplary system embodiment **105**D, and a fifth exemplary adaptive interface embodiment **115**D in accordance with the teachings of the present disclosure. FIG. **21** is a graphical diagram illustrating exemplary, modeled transient voltage **616** and current **615** waveforms for a fifth exemplary apparatus embodiment, a fifth exemplary system embodiment, and a fifth exemplary adaptive interface embodiment in accordance with the teachings of the present disclosure. Not separately illustrated, the apparatus **100**D may be coupled to a dimmer switch **75** and an AC line **35** as previously illustrated in FIGS. **8** and **9**. The adaptive interface **115**D is an exemplary passive embodiment of a full operation interface circuit **220**, for example, and without limitation. The adaptive interface **115**D comprises a resistor **237** is connected in parallel with inductor **236**, and the inductor **236** and capacitor **235**A form a resonant circuit. When the resonant current reaches its peak, the voltage across the inductor **236** changes polarity and partially discharges through the resistor **237**, thereby diminishing the inrush current into the switching power supply **130** and preventing current to further charge filter capacitor **235**A, while simultaneously allowing sufficient latching and holding currents for the dimmer switch **75**. Adaptive interface **115**D provides a passive implementation of the method of interfacing of the dimmer switch **75** and switching power supply **130** by providing a substantially matching electrical environment through shaping dimmer switch **75** current in the resonant process and provides latching and holding currents well above any typical minimum value for a dimmer switch **75**. As illustrated in FIG. **21**, experimental modeling indicates significant damping and effective elimination of any unwanted oscillation following switch turn on (waveform **613**), and further may provide a minimum dimmer switch **75** current of about 96 mA (current waveform **615**), a value above typical holding current levels

(e.g., 50 mA), while latching current has been shown to be about 782 mA, also well above the typical minimum latching current threshold.

In accordance with exemplary embodiments, the inductance and capacitance values of the resonant components outside the dimmer switch **75** (or otherwise a characteristic impedance, such as about the 250 Ohm value mentioned below) are predetermined or preselected in such a way that the peak resonant current both exceeds the value of the latching current of the dimmer switch **75** at any AC value at turn on and, further, is reasonably or comparatively low in order to avoid damaging dimmer switch **75** and switching power supply **130** components. For a 110 V (220 V) operating environment, one or more inductors having a combined inductance of about 16-24 mH (40-50 mH), and more particularly, 18-22 mH (43-47 mH), are utilized (e.g., three inductors implementing inductor **236** at 6.8 mH each (15 mH each)), for the previously stated range of capacitance values for the filter capacitor **235**, providing an overall characteristic impedance between about 200-300 Ohms, and more particularly, generally about 250 Ohms.

FIG. **24** is a block and circuit diagram illustrating a ninth exemplary apparatus embodiment **100**H, a ninth exemplary system embodiment **105**H, and an eighth exemplary adaptive interface embodiment **115**H in accordance with the teachings of the present disclosure. FIG. **25** is a graphical diagram illustrating an exemplary, modeled transient current waveform for a ninth exemplary apparatus embodiment **100**H, a ninth exemplary system embodiment **105**H, and an eighth exemplary adaptive interface embodiment **115**H in accordance with the teachings of the present disclosure. Not separately illustrated, the apparatus **100**H may be coupled to a dimmer switch **75** and an AC line **35** as previously illustrated in FIGS. **8** and **9**. Also not separately illustrated, the apparatus **100**H may also comprise additional or other current and/or voltage sensors. For example and without limitation, the exemplary adaptive interface **115**H may be utilized during both start up and gradual or soft start processes for any state of the dimmer switch **75** (steps **310-320**), may be utilized during full operational mode (step **322**), and may be utilized to implement either or both a start-up interface circuit **200** and/or a gradual or soft start power interface circuit **210**. The adaptive interface **115**H is also an exemplary passive embodiment of a full operation interface circuit **220**, also for example and without limitation. The adaptive interface **115**H comprises a resistor **440** connected in series to capacitor **445** and also connected with inductor **236**, and the inductor **236** and capacitor **445** form a resonant circuit. The resistor **440** is also in parallel with diode **450**, which also provides a discharge path for the capacitor **445** into the switching power supply **130**, thereby avoiding substantially resistive power losses. When the resonant current reaches its peak, the voltage across the inductor **236** changes polarity and partially discharges through the resistor **440** and into capacitor **445** (and also into capacitor **235**A), thereby diminishing the inrush current into the switching power supply **130**, damping oscillation, and preventing current to further charge filter capacitor **235**A, while simultaneously allowing sufficient latching and holding currents for the dimmer switch **75**. Adaptive interface **115**H provides a passive implementation of the method of interfacing of the dimmer switch **75** and switching power supply **130** by providing a substantially matching electrical environment through shaping dimmer switch **75** current in the resonant process and provides latching and holding currents well above any typical minimum value for a dimmer switch **75**. As illustrated in FIG. **25**, experimental modeling indicates significant damping and effective elimination of any unwanted oscillation following switch turn on (waveform **640**), and further may provide a minimum dimmer switch **75** current of about 200 mA, a value above typical holding current levels (e.g., 50 mA) and also well above the typical minimum latching current threshold.

As mentioned above, in accordance with exemplary embodiments of adaptive interface **115**H, the inductance and capacitance values of the resonant components outside the dimmer switch **75** (or otherwise a characteristic impedance) are predetermined or preselected in such a way that the peak resonant current both exceeds the value of the latching current of the dimmer switch **75** at any AC value at turn on, and further is reasonably or comparatively low in order to avoid damaging dimmer switch **75** and switching power supply **130** components.

The adaptive interface **115**H may also be considered to comprise two interface circuits, a first interface circuit providing an (at least partially) resistive impedance in a default mode (resistor **440**, alone or in conjunction with capacitor **445** (as a reactive impedance) and/or diode **450**, and a second interface circuit (inductor **236** and capacitor **445** and/or capacitor **235**A) creating a resonant process when the dimmer switch **75** turns on. The at least partially resistive impedance (resistor **440**) further serves to damp oscillation and limit any initial current inrush, while further avoiding decreasing the current to zero after resonance ends.

An apparatus **100**H for power conversion, with the apparatus couplable to a first, phase-modulated dimmer switch coupled to an alternating current (AC) power source, the apparatus **100**H also couplable to a solid state lighting, may be considered to comprise: a switching power supply **130**; a first adaptive interface circuit comprising an at least partially resistive impedance to conduct current from the first switch in a default mode; and a second adaptive interface circuit to create a resonant process when the first switch turns on. The first adaptive interface circuit may comprise a resistor **440**, and may further comprise a diode **450** coupled in parallel to the resistor. The second adaptive interface circuit may be considered to comprise: an inductor **236** coupled to the resistor **440**; and a capacitor **445** coupled in series to the resistor **440**. Stated another way, the first adaptive interface circuit and the second adaptive interface circuit comprise: an inductor (**236**); a resistor **440** coupled to the inductor **236**; a capacitor **445** coupled in series to the resistor **440**; and a diode **450** coupled in parallel to the resistor **440** and further coupled to the inductor **236**. A filter capacitor **235**A may also be coupled in parallel to the series-coupled resistor **440** and capacitor **445**.

FIG. **26** is a block and circuit diagram illustrating a tenth exemplary apparatus embodiment **100**J, a tenth exemplary system embodiment **105**J, and a ninth exemplary adaptive interface embodiment **115**J in accordance with the teachings of the present disclosure. FIG. **27** is a graphical diagram illustrating exemplary, modeled transient voltage and current waveforms for a tenth exemplary apparatus embodiment **100**J, a tenth exemplary system embodiment **105**J, and a ninth exemplary adaptive interface embodiment **115**J in accordance with the teachings of the present disclosure. Not separately illustrated, the apparatus **100**J may be coupled to a dimmer switch **75** and an AC line **35** as previously illustrated in FIGS. **8** and **9**. Also not separately illustrated, the apparatus **100**J may also comprise additional or other current and/or voltage sensors. For example, and without limitation, the tenth exemplary apparatus embodiment **100**J may be utilized during both start up and gradual or soft start processes for any state of the dimmer switch **75** (steps **310-320**), may be utilized during full operational mode (step **322**), and may be

utilized to implement either or both a start-up interface circuit **200** and/or a gradual or soft start power interface circuit **210**, for example and without limitation. The tenth exemplary apparatus embodiment **100**J comprises a matching resistive impedance (resistor **480**) coupled in series to (filter) capacitor **460**, which are coupled in parallel to another matching resistive impedance (resistors **470** and **475**) (which are also connected to the dimmer switch **75** through rectifier **110**), to provide a substantially matching electrical environment for the dimmer switch **75** (for any of its three states) during start up and/or during gradual or soft start of the switching power supply **130**. When the dimmer switch **75** is on, the capacitor **460** is charged through the resistor **480**, which serves to limit peak current, with capacitor **460** also providing power factor correction. The matching resistive impedance (resistor **480**) coupled in series to (filter) capacitor **460** provides a first current path, and the capacitor **460** in series with the switch (MOSFET) **455** provide a second current path, to maintain sufficient holding and latching currents in a default mode. The additional matching impedance (resistors **470** and **475**), together or further in conjunction with capacitor **465**, in addition to providing an input voltage sensing function, also may be considered to provide a third current path.

In addition, the resistors **470**, **475** and capacitor **465** allow the switch (MOSFET) **455** to turn on passively, without active control, although active control may also be provided optionally (connection **485**, illustrated using a dashed line), also thereby providing another current path (current sink) through the switch **455** to maintain sufficient holding and latching currents while decreasing resistive power losses. This latter matching impedance can be controlled by using a gate-to-source voltage defined by resistor **475** and capacitor **465**, or variable and driven by a control voltage from controller **120**. The adaptive interface **115**J is effectively regulating the input power to the system **105**J such that the minimum current to be put through the dimmer switch **75** for its stable operation is exceeded. A corresponding voltage waveform **642** and current waveform **641** are illustrated in FIG. **27**, showing peak current limited to about 180 mA. Such a peak current limit may be predetermined or preselected based on the resistance value of resistor **480**. In addition, the switch (MOSFET) **455** may be sized to a corresponding input voltage, such as 200 V in the US or 400 V in Europe, for example, and without limitation.

The voltage divider formed by resistors **470**, **475** (or also in conjunction with capacitor **465**) also acts as a voltage sensor (such as for input voltage levels). The resistors **470**, **475** (or also in conjunction with capacitor **465**) may also be considered to constitute an interface controller which automatically modulates the gate of the switch (MOSFET) **455** accordingly, thereby also regulating current through the switch (MOSFET) **455** and capacitor **460**.

The adaptive interface **115**J may also be considered to comprise one or more interface circuits, such as a first interface circuit providing a resistive and a reactive impedance for conducting current in a default mode (resistor **480** in conjunction with capacitor **460**) and a second interface circuit (capacitor **460** in conjunction with switch (MOSFET) **455**) which provides a second current path when the dimmer switch **75** has turned on and sufficient voltage has been generated at the gate of switch (MOSFET) **455**, both of which further serve to create an oscillation damping process when the dimmer switch **75** turns on and limit any initial current inrush, while further allowing sufficient current flow to maintain holding and latching current levels. Alternatively, the adaptive interface **115**J may be considered to be a single interface circuit which provides these functions.

Accordingly, during either start up or gradual or soft start states of the switching power supply **130**, an adaptive interface **115**, such as **115**H or **115**J, also provides a corresponding and substantially matching electrical environment to the dimmer switch **75**, such as a constant or variable impedance allowing sufficient current through the dimmer switch **75** to be greater than or equal to a latching or holding current (when the dimmer is turning on or is in an on state, steps **312**, **314**, **318**, and/or **320**) and to provide a current path for charging the triggering capacitor (when the dimmer is in an off or non-conducting state, FIG. **10**, steps **310**, **316**). During full operational mode of the switching power supply **130**, such a substantially matching electrical environment to the dimmer switch **75**, such as a constant or variable impedance, may also be used to provide a current path for charging the triggering capacitor (when the dimmer is in an off or non-conducting state, FIG. **10**, step **322**), as discussed above.

FIG. **28** is a block and circuit diagram illustrating an eleventh exemplary apparatus embodiment **100**K, an eleventh exemplary system embodiment **105**K, and a tenth exemplary adaptive interface embodiment **115**K in accordance with the teachings of the present disclosure. Not separately illustrated, the apparatus **100**K may be coupled to a dimmer switch **75** and an AC line **35** as previously illustrated in FIGS. **8** and **9**. Also not separately illustrated, the apparatus **100**K may also comprise additional or other current and/or voltage sensors. For example and without limitation, the exemplary adaptive interface **115**K may be utilized during both start up and gradual or soft start processes for any state of the dimmer switch **75** (steps **310**-**320**), may be utilized during full operational mode (step **322**), and may be utilized to implement any of a start-up interface circuit **200**, a gradual or soft start power interface circuit **210**, and/or a full operation interface circuit **220**. The adaptive interface **115**K functions similarly to the adaptive interface **115**H previously discussed with reference to FIG. **24**, but is an exemplary active embodiment, also for example, and without limitation. The adaptive interface **115**K comprises a resistor **440** connected in series to capacitor **445** and also connected with inductor **236**, and the inductor **236** and capacitor **445** form a resonant circuit. The resistor **440** is also in parallel with diode **450**, which also provides a discharge path for the capacitor **445** into the switching power supply **130**, thereby avoiding substantially resistive power losses. When the resonant current reaches its peak, the voltage across the inductor **236** changes polarity and partially discharges through the resistor **440** and into capacitor **445** (and also into capacitor **235**A), thereby diminishing the inrush current into the switching power supply **130**, damping oscillation, and preventing current to further charge filter capacitor **235**A, while simultaneously allowing sufficient latching and holding currents for the dimmer switch **75**.

Adaptive interface **115**K provides an active implementation of the method of interfacing of the dimmer switch **75** and switching power supply **130** by providing a substantially matching electrical environment through shaping dimmer switch **75** current in the resonant process and provides latching and holding currents well above any typical minimum value for a dimmer switch **75**. In this exemplary embodiment, the resistive network (comprised of resistors **446** and **447** configure in series as a voltage divider) provides information to the controller **120** about the status of the dimmer switch **75**, with the controller **120** in turn (through a MOSFET driver circuit, not separately illustrated) controlling the on and off status of the switch (MOSFET) **455**A. In an exemplary embodiment, the switch (MOSFET) **455**A is in an on state when the dimmer switch **75** is off, and then, with a slight delay on the order of 200-300 microseconds, turns off after the

dimmer switch **75** turns on, providing for start up and gradual or soft start processes when the switch (MOSFET) **455**A is in an on state, and then for reducing potential power losses during full operational mode when the switch (MOSFET) **455**A is in an off state.

As mentioned above, in accordance with exemplary embodiments of adaptive interface **115**K, the inductance and capacitance values of the resonant components outside the dimmer switch **75** (or otherwise a characteristic impedance) are predetermined or preselected in such a way that the peak resonant current both exceeds the value of the latching current of the dimmer switch **75** at any AC value at turn on, and further is reasonably or comparatively low in order to avoid damaging dimmer switch **75** and switching power supply **130** components.

The adaptive interface **115**K may also be considered to comprise two interface circuits, a first interface circuit providing an (at least partially) resistive impedance in a default mode (resistor **440**, alone or in conjunction with capacitor **445** (as a reactive impedance) and/or diode **450**, and a second interface circuit (inductor **236**, switch (MOSFET) **455**A, and capacitor **445** and/or capacitor **235**A) creating a resonant process when the dimmer switch **75** turns on. The at least partially resistive impedance (resistor **440**) further serves to damp oscillation and limit any initial current inrush, while further avoiding decreasing the current to zero after resonance ends.

An apparatus **100**K for power conversion, with the apparatus couplable to a first, phase-modulated dimmer switch coupled to an alternating current (AC) power source, the apparatus **100**K also couplable to a solid state lighting, may be considered to comprise: a switching power supply **130**; a first adaptive interface circuit comprising an at least partially resistive impedance to conduct current from the first switch in a default mode; and a second adaptive interface circuit to create a resonant process when the first switch turns on, and thereafter to turn off and allow a full operational mode without additional power losses. The first adaptive interface circuit may comprise a resistor **440**, and may further comprise a diode **450** coupled in parallel to the resistor. The second adaptive interface circuit may be considered to comprise: an inductor **236** coupled to the resistor **440**; a capacitor **445** coupled in series to the resistor **440**, and a switch **455**A coupled in series to the capacitor **445** and further coupled to a controller **120**. Stated another way, the first adaptive interface circuit and the second adaptive interface circuit comprise: an inductor **236**; a resistor **440** coupled to the inductor **236**; a capacitor **445** coupled in series to the resistor **440** and to the switch **455**A; and a diode **450** coupled in parallel to the resistor **440** and further coupled to the inductor **236**. A filter capacitor **235**A may also be coupled in parallel to the series-coupled resistor **440** and capacitor **445**. In addition, a resistive network (such as voltage divider comprising resistors **446**, **447**) may also be included to provide dimmer switch **75** status information to the controller **120**.

FIG. **29** is a block and circuit diagram illustrating a twelfth exemplary apparatus embodiment **100**L, a twelfth exemplary system embodiment **105**L, and an eleventh exemplary adaptive interface embodiment **115**L in accordance with the teachings of the present disclosure. Not separately illustrated, the apparatus **100**L may be coupled to a dimmer switch **75** and an AC line **35** as previously illustrated in FIGS. **8** and **9**. Also not separately illustrated, the apparatus **100**L may also comprise additional or other current and/or voltage sensors. For example and without limitation, the exemplary adaptive interface **115**L may be utilized during both start up and gradual or soft start processes for any state of the dimmer switch **75** (steps **310**-**320**), may be utilized during full operational mode (step **322**), and may be utilized to implement any of a start-up interface circuit **200**, a gradual or soft start power interface circuit **210**, and/or a full operation interface circuit **220**. This exemplary adaptive interface **115**L is also particularly well-suited to a wide, expanded dimmer range on the order of 1:10,000 while simultaneously providing exceptional stability.

For this exemplary embodiment, a comparatively low and consistent impedance is provided to the dimmer switch **75** to charge the triggering capacitor **77** (C1) when the dimmer switch **75** is off. A switch (MOSFET) **740** is connected to the rectified voltage line (line **746**) via resistor **703**. At start up, the switch (MOSFET) **740** turns on and (via diode **712**) charges VCC capacitor **460**, to provide a substantially matching electrical environment (and first current path) for the dimmer switch **75** (for any of its three states) during start up and/or during gradual or soft start of the switching power supply **130**. When VCC capacitor **460** has been charged to about a power on reset voltage level of the switching power supply **130**, the switching power supply **130** turns on and generates a voltage (or other signal) on line **745**, which turns on switch (MOSFET) **730** and turns off switch (MOSFET) **740**, effectively terminating the precharging of the VCC capacitor **460** and providing a second current path (resistor **702** in series with switch (MOSFET) **730**). At about the same time, switch (MOSFET) **735** is turned on, and is in series with switch (MOSFET) **740**, which then subsequently provides a third current path when switch (MOSFET) **740** may be switched back on (resistor **703** in series with switch (MOSFET) **740** and switch (MOSFET) **735**).

Bipolar junction transistor (BJT) **720** is utilized as a sensor, to determine the status of the dimmer switch **75**, and further to control the switching of switches (MOSFETs) **740** and **730**. Bipolar junction transistor (BJT) **720** is connected between the VCC voltage level (on line **747**) and the rectified line voltage (on line **746**). When the rectified voltage is less than the voltage across zener diode **714** (generally about 5 V), the transistor (BJT) **720** is off (or open), switch (MOSFET) **725** is in an on state, turning off switch (MOSFET) **730** and turning on switch (MOSFET) **740**. Accordingly, when the dimmer switch **75** is off, switch (MOSFET) **740** is on and another current path is provided through resistor **703**, switch (MOSFET) **740**, and switch (MOSFET) **735**. The triggering capacitor **77** (C1) of the dimmer switch **75** is now charged through the comparatively low resistance of (comparatively small) resistor **703** until it reaches a triggering voltage level and the dimmer switch **75** turns on. The rectified voltage increases (substantially immediately), turning on transistor (BJT) **720** and turning off switch (MOSFET) **740**, with another current path provided through resistor **702** and switch (MOSFET) **730**.

The twelfth exemplary apparatus embodiment **100**L comprises a matching resistive impedance (resistor **703**) switchably coupled, via switch (MOSFET) **740** and diode **712**, in series to (filter or VCC) capacitor **460**, and which are switchably coupled in parallel to another matching resistive impedance (resistor **702**) and switch (MOSFET) **730** (also with resistor **709**) (which are also connected to the dimmer switch **75** through rectifier **110**), to provide a substantially matching electrical environment for the dimmer switch **75** (for any of its three states) during start up, and/or during gradual or soft start of the switching power supply **130**. When the dimmer switch **75** is turning on, the capacitor **460** is charged through the resistor **703** (and switch (MOSFET) **740** and diode **712**), which serves to limit peak current, with capacitor **460** also potentially providing power factor correction. The matching

resistive impedance (resistor **703**) switchably coupled (via switch (MOSFET) **740** and diode **712**) in series to (filter or VCC) capacitor **460** provides a first current path, the matching resistive impedance (resistor **702**) in series with the switch (MOSFET) **730** provide a second current path, and the matching resistive impedance (resistor **703**) switchably coupled (via switch (MOSFET) **740** and switch (MOSFET) **735** provides a third current path, to maintain sufficient holding and latching currents in a default mode. The additional matching impedance (resistors **470** and **475**), in addition to providing an input voltage sensing function, also may be considered to provide a fourth current path.

During typical operation, power losses through adaptive interface **115**L are quite insignificant, as it is on at very low line voltages. In addition, the dimming angle is reduced by about 10-15 degrees, moving the dimmer switch **75** into the range of higher operating voltages and thereby making it much more stable.

Accordingly, during either start up or gradual or soft start states of the switching power supply **130**, an adaptive interface **115**, such as **115**K or **115**L, also provides a corresponding and substantially matching electrical environment to the dimmer switch **75**, such as a constant or variable impedance allowing sufficient current through the dimmer switch **75** to be greater than or equal to a latching or holding current (when the dimmer is turning on or is in an on state, steps **312**, **314**, **318**, and/or **320**) and to provide a current path for charging the triggering capacitor (when the dimmer is in an off or non-conducting state, FIG. **10**, steps **310**, **316**). During full operational mode of the switching power supply **130**, such a substantially matching electrical environment to the dimmer switch **75**, such as a constant or variable impedance, may also be used to provide a current path for charging the triggering capacitor (when the dimmer is in an off or non-conducting state, FIG. **10**, step **322**), as discussed above.

FIG. **30** is a block and circuit diagram illustrating a thirteenth exemplary apparatus embodiment **100**M and a thirteenth exemplary system embodiment **105**M in accordance with the teachings of the present disclosure. The apparatus **100**M and system **105**M operate as previously discussed for apparatus **100**G and **105**G (of FIG. **17**), but now include ripple cancellation circuit **800**. Such a ripple cancellation circuit **800** may be utilized with any of the apparatus and system embodiments described herein, and is illustrated as part of apparatus **100**M and system **105**M to show its location between a switching power supply **130** (illustrated in FIG. **30** as switching power supply **130**A) and LEDs **140**. FIG. **31** is a block and circuit diagram illustrating an exemplary ripple cancellation circuit **800**A embodiment in accordance with the teachings of the present disclosure.

An exemplary ripple cancellation circuit **800**, **800**A is particularly useful for extremely low dimming, such as 1:10,000, where the output of the dimmer switch **75** may drop to less than 1 W, such as in the range of 0.5-0.6 W. Regardless of any interface circuits **115**, a device designed to work at 600 W or 1000 W may be quite unpredictable at 0.5 W, and which may result in a low frequency dimmer ripple jittering which creates visible LED **140** flickering. As discussed in greater detail below, an exemplary ripple cancellation circuit **800**, **800**A may be utilized to eliminate such ripple at low power levels, while allowing the ripple and avoiding causing increased power losses at higher power levels.

Referring to FIG. **31**, an input voltage VIN from a switching power supply **130** is provided at node **865**, and an output voltage to LEDs **140** is provided at node **870**. First and second (BJT) transistors **805**, **810**, with resistors **845** and **850**, function as a differential amplifier circuit. Using first zener diode **820** and resistors **830**, **835**, a reference voltage is provided at node **880** to the base of first transistor **805**, while the base of second transistor **810** receives a feedback voltage at node **875** using zener diode **825** and resistors **855**, **860**. A negative feedback loop is formed with the collector of first transistor **805**, pass transistor **815**, second zener diode **825** and resistors **855**, **860**. The differential amplifier circuit with pass transistor **815** effectively operates similarly to an operational amplifier circuit, forcing the feedback voltage at node **875** to be substantially the same as the reference voltage at node **880**. For example, if the feedback voltage at node **875** is greater than the reference voltage at node **870**, the voltage at the emitter of second transistor **810** is pulled higher, turning off first transistor **805**, allowing the voltage at the collector of first transistor **805** to rise, lowering the voltage drop across resistor **845**, thereby turning off or modulating pass transistor **815** as its gate-to-source voltage has decreased, resulting in a lower output voltage at node **870** which lowers the feedback voltage at node **875** (from voltage divider comprising resistors **855**, **860**). Also for example, if the feedback voltage at node **875** is less than the reference voltage at node **870**, the first transistor **805** is turned on more, increasing the voltage drop across resistor **845**, lowering the voltage at the collector of first transistor **805**, thereby turning on, or turning on more, the pass transistor **815** as its gate-to-source voltage has increased, resulting in a higher output voltage at node **870** which raises the feedback voltage at node **875** (from voltage divider comprising resistors **855**, **860**). The values of the resistors **830**, **835**, **855**, and **860** may be adjusted to allow the output voltage provided at node **870** to be any desired fraction (or multiple) of the input voltage VIN provided at node **865**.

A low pass filter comprising capacitor **840** and resistors **835**, **840** is utilized to prevent the reference voltage at node **880** from following perturbations (such as AC ripple) of the input voltage VIN at node **865**, thereby preventing AC ripple or other perturbations of the input voltage VIN at node **865** from appearing in the output voltage provided at node **870**. The values of the resistors **830**, **835** and capacitor **840** may be adjusted to provide the desired or selected frequency response.

At higher voltage and/or current levels, however, the exemplary embodiments avoid a loss of efficiency (from pass transistor **815**), when flicker would not be perceived at higher brightness levels. Accordingly, at higher output voltage levels, second zener diode **825** is utilized to clamp the voltage level of the feedback voltage at node **875**. This results in the first transistor **805** being turned on quite strongly (or quite hard), increasing the voltage across resistor **845** resulting in a large gate-to-source voltage on pass transistor **815** which is then also on quite strongly (or quite hard), effectively shorting the output voltage provided at node **870** to the input voltage VIN at node **865**, thereby allowing the AC ripple to appear at the output voltage provided at node **870** and avoiding a voltage drop across pass transistor **815** (and correspondingly avoiding power losses).

Additional control stability is provided through the use of first zener diode **820**. For example, delays in providing corresponding output voltage and current levels from input voltage and current levels can create instabilities in the control provided by a controller **120**, which may overcorrect and generate oscillation. Accordingly, first zener diode **820** is utilized to rapidly pull up the reference voltage at node **880** and charge capacitor **840** when the input voltage VIN at node **865** increases rapidly, allowing the output voltage provided at node **870** to react quickly to large increases in the input voltage VIN at node **865**.

An exemplary second method of operating an apparatus **100**, **100**A-H having a switching power supply **130** and an input filter capacitor **235** (having a comparatively low capacitance, i.e., a small capacitor) during a full operation mode and when powered by a dimmer switch **75**, by providing a substantially matching electrical environment to the dimmer switch **75** when it has turned on, may comprise the following sequence (FIG. **10**, step **326**, or both steps **324**-**326**):

1. Monitoring resonant current after dimmer switch **75** turn on.
2. When the resonant current has reached its peak, adaptively providing a first interface mode using an adaptive interface **115** (e.g., **115**E, **115**F) as an additional transient path for the current to divert it from resonant charging of the filter capacitor **235** while simultaneously maintaining the dimmer switch **75** current above the holding (or latching) current threshold.
3. With the adaptive interface **115** (as an additional transient circuit) activated, driving the switching power supply **130** with the substantially maximum permissible instantaneous input power without violation of the subsequent average power consumed by the switching power supply **130** during the utility cycle as determined or set by corresponding feedback.
4. Discontinuing use of the adaptive interface **115** and transitioning to a second interface mode of the dimmer switch **75** and the switching power supply **130** at about the time the resonant inductor has discharged its stored energy or when a predetermined period of time has elapsed following the resonant current having substantially reached its peak.

This exemplary methodology may be implemented, for example, using the circuitry illustrated in FIGS. **15**-**17**.

FIG. **15** is a block and circuit diagram of a sixth exemplary apparatus embodiment **100**E, a sixth exemplary system embodiment **105**E, and a sixth exemplary adaptive interface embodiment **115**E in accordance with the teachings of the present disclosure. FIG. **22** is a graphical diagram illustrating exemplary, modeled transient voltage **621** and current **620**, **622** waveforms for a sixth exemplary apparatus embodiment, a sixth exemplary system embodiment, and a sixth exemplary adaptive interface embodiment in accordance with the teachings of the present disclosure. Not separately illustrated, the apparatus **100**E may be coupled to a dimmer switch **75** and an AC line **35** as previously illustrated in FIGS. **8** and **9**. The adaptive interface **115**E implements a full operation interface circuit **220**, for example and without limitation. The adaptive interface **115**E comprises inductor **236**, resistors **238** and **239**, switch (transistor) **240**, zener diode **241**, and blocking diode **242**. The inductor **236** and filter capacitor **235**A form a resonant circuit. A transistor **240** is connected in series with the resistor **239** and diodes **241** and **242** across (in parallel with) the inductor **236**. The base of transistor **240** is also connected to the inductor **236** via a resistor **238**. Blocking diode **242** and zener diode **241** prevent a turning on of the transistor **240** during the non-resonant (or non-transient) switching cycles of the power supply **130**. When the resonant current through the dimmer switch **75** reaches its peak, the polarity of the voltage across inductor **236** changes and transistor **240** starts conducting, providing a transient current path through resistor **239** and preventing excessive overcharge of the filter capacitor **235**A. As illustrated in FIG. **22**, experimental modeling (voltage waveform **621** across filter capacitor **235**, modeled voltage waveform **623** provided by dimmer switch **75**, current **620** through dimmer switch **75**, and current **622** through transistor **240**) indicates significant damping and effective elimination of any unwanted oscillation, providing substantially stable operation of the dimmer switch **75**, and further provides both a maximum current of about 1.07 A and a minimum dimmer switch **75** current of about 156 mA, a value above typical minimum holding and latching current thresholds.

FIG. **16** is a block and circuit diagram of a seventh exemplary apparatus embodiment **100**F, a seventh exemplary system embodiment **105**F, and a seventh exemplary adaptive interface embodiment **115**F in accordance with the teachings of the present disclosure. FIG. **23** is a graphical diagram illustrating exemplary, modeled transient voltage and current waveforms for a seventh exemplary apparatus embodiment, a seventh exemplary system embodiment, and a seventh exemplary adaptive interface embodiment in accordance with the teachings of the present disclosure. Not separately illustrated, the apparatus **100**F may be coupled to a dimmer switch **75** and an AC line **35** as previously illustrated in FIGS. **8** and **9**. The adaptive interface **115**F implements a full operation interface circuit **220**, for example, and without limitation. The adaptive interface **115**F comprises inductor **236**, differentiator **261**, one shot circuit **252**, switch (MOSFET transistor) **250**, and resistor **251**. A current sensor **125**B is illustrated as embodied by and comprising a current sense resistor **260**, which is illustrated as providing feedback to the differentiator **261** and also optionally to the controller **120**. In addition to the other control functionality of a controller **120** as discussed herein, controller **120**A may further comprise a differentiator **261**. A voltage generated across current sense resistor **260** may be utilized as an indicator of, for example, current through the dimmer switch **75** (not separately illustrated). Inductor **236** and input filter capacitor **235**A also form a resonant circuit as discussed above. A differentiator **261** comprising operational amplifier **255**, capacitor **256**, and resistors **253** and **254** is connected (via capacitor **256** to its inverting input) to current sense resistor **260**. The output of the differentiator **261** is coupled to a one shot circuit **252** to drive the switch (MOSFET) **250** with a resistive load **251**. When the resonant current through the dimmer switch **75** reaches its peak, the differentiator **261** triggers the one shot circuit **252** which turns on switch (MOSFET) **250** for a predetermined or preselected time duration, providing an additional path for current from inductor **236**, to avoid additional charging of filter capacitor **235**A. The various waveforms illustrated in FIG. **23** include current waveform **630** for the current through the dimmer switch **75**, voltage waveform **631** for the voltage across the filter capacitor **235**A, the input AC voltage waveform **623** (when turned on by the dimmer switch **75**), and the current waveform **632** for the current through the MOSFET switch **250**. Experimental modeling indicates significant damping and effective elimination of any unwanted oscillation, providing substantially stable operation of the dimmer switch **75**, and further may provide a minimum dimmer switch **75** current of about 100 mA, a value above typical minimum holding and latching current thresholds, with resistor **251** and switch **250** sinking about 60 mA of current for a 1 A peak current, and with the on time duration of the switch **250** (from the one shot circuit **252**) being about 200 μs. Circuitry other than the one shot circuit **252** having a fixed active time duration could be substituted equivalently, such as by a variable or dynamic active time under the control of the controller **120**, **120**A, and those having skill in the art may use numerous adaptive timing circuits to exercise such an option.

FIG. **17** is a block and circuit diagram of an eighth exemplary apparatus embodiment **100**G and an eighth exemplary system embodiment **105**G in accordance with the teachings of the present disclosure. The apparatus **100**G implements both a full operation interface circuit **220** (using adaptive

interfaces **115**D and **115**F) and a combined start-up interface and gradual or soft start power interface circuit **200**, **210** (using adaptive interface **115**B, operating voltage bootstrap circuit **115**G which also functions as an adaptive interface), for example, and without limitation. In addition, through the use of the various sensors **125** and the controller **120**A (including the differentiator **261** for driving the one shot circuit **252**), the apparatus **100**G also implements a protective mode interface circuit **230**, as discussed in greater detail below. The apparatus **100**G is considered exemplary of any of the various combinations of a resonant process interface circuit **195** (implemented using interface **115**D), a full operation interface circuit **220**, a start-up interface **200**, a gradual or soft start power interface circuit **210**, and a protective mode interface circuit **230**, and those having skill in the electronic arts will recognize innumerable equivalent combinations which are considered within the scope of the present disclosure.

As illustrated, the apparatus **100**G comprises a controller **120**A, a memory **160** (e.g., registers, RAM), a plurality of sensors **125**, a plurality of adaptive interface circuits **115**, optional coupling inductor **270** and capacitor **271**, a bridge rectifier **110**A, filter capacitor **235**A, bootstrap circuit **115**G for fast generation of an operating voltage VCC (in block **290**) (and bootstrap circuit **115**G also serves to operate as an adaptive interface circuit **115**B, as discussed below), a switching power supply **130**A (illustrated as having a transformer **280** in a flyback configuration), and an optional resistance **295** (which may also function as a voltage or current sensor in exemplary embodiments). The teachings of this disclosure do not limit the topology of the apparatus **100**G to the referenced flyback configuration, and any type or kind of power supply **130** configuration may be utilized, and may be implemented as known or becomes known in the electronic arts. The apparatus **100**G is coupled to a dimmer switch **75** and an AC line **35** via inductor **270** and capacitor **271**, which are then coupled to a bridge rectifier **110**A, as an illustration of an exemplary rectifier **110** which is coupled through other components to the dimmer switch **75**. The adaptive interface **115**B and adaptive interface **115**D function as discussed above to provide the substantially matching electrical environments to the dimmer switch **75** during start up, gradual or soft start, and full operational modes. A dimmer status sensor **125**C is also illustrated, which may be implemented using any type of sensor, such as using a voltage sensor **125**A as discussed above. As illustrated, a plurality of sensors **125** are utilized, in addition to the dimmer status sensor **125**C, namely, two current sensors **125**B**1**, **125**B**2** and voltage sensor **125**A. The apparatus **100**G provides power to one or more LEDs **140**, which may be an array or multiple arrays of LEDs **140**, of any type or color, with the apparatus **100**G and LEDs **140** forming system **105**G.

Exemplary embodiments or other implementations for a controller **120**A and a memory **160** are described in greater detail below. The one or more sensors are utilized to sense or measure a parameter, such as a voltage or current level, and may be implemented as known or becomes known in the electronic arts. The switching power supply **130**A and/or the controller **120**A may and typically will receive feedback from the LEDs **140** via sensors **125**A, **125**B**1**, **125**B**2**, as illustrated.

The adaptive interface circuits **115** of the apparatus **100**G function as discussed previously. Bootstrap circuit **115**G may be used both to generate an operational voltage during start up and to provide additional current sinking capability during any of the states of the dimmer switch **75**. Switching of transistor **285** is utilized for delivering power to the plurality of LEDs **140** via transformer **280**.

The controller **120**A implements a first control method comprising two parts, a pulse width modulation (PWM) switching of the switching power supply **130**A (via transistor **285**), using a variable duty cycle ("D") up to a maximum duty cycle ("DMAX"), followed by an additional operating mode, referred to as a current pulse mode, to maintain stable operation of the dimmer switch **75** and provide the appropriate dimming of the light output. The duty cycle D is determined by the controller **120** based on a detected input voltage level, so that the apparatus **100**G and system **105**G may accommodate a wide range of input voltages (which may vary from time to time and also both nationally and internationally, e.g., from 90 to 130 V).

The output power POUT delivered by the switching power supply **130**A to the LEDs **140** is equal to:

$$P_{OUT} = \frac{\pi V^2 D}{4 f L_m}$$

where V is the RMS input voltage;

D is the Duty cycle, averaged for a half cycle of the input AC voltage;

f is the switching frequency of the power supply **130**A; and

Lm is the magnetizing inductance of the transformer of the switching power supply **130**A.

For a constant switching frequency of the power supply **130**A, the duty cycle D is inversely proportional to the square of the input voltage, i.e., when voltage is increasing, the duty cycle drops to deliver the same output power. Constant switching frequency is given for an example only, and a method described below is transparent to the frequency domain. Based on the output power, a maximum duty cycle DMAX is occurring at the minimum input voltage. As a switching power supply **130** is generally designed with a predetermined or otherwise certain maximum duty cycle for a stable operation of its magnetic components, the maximum duty cycle DMAX is predetermined or preselected at minimum input voltage. When the output of the switching power supply **130** is controlled by a dimmer switch **75**, the controller **120** is configured to have an average duty cycle based on an average input voltage regulated by the dimmer switch **75**.

The following is an example to illustrate the insight of aspects of the present disclosure which introduces two separate control methodologies, without relying solely on control through PWM as typically found in the prior art, in addition to independently controlling the amount of current through the dimmer switch **75** to maintain stable operation. As an example, at an input voltage of 90V RMS (Average 81 V), a DMAX=0.6 is selected at a phase angle $\alpha$=0. It should be noted that the maximum volt-seconds ("voltsecs") to magnetize the magnetic components **280** will happen at the crest of the input voltage. In the event that the input voltage is or becomes 130 VRMs (average 120 V), the duty cycle developed, determined or otherwise calculated by the controller **120** decreases to D=0.29, and as for the same magnetizing voltsecs at the crest of 130 V the duty cycle is D=0.415. As a consequence, working with D=0.415 is safe or otherwise appropriate for the magnetic components of the transformer **280**. Assuming for this example that at 130 V the phase modulation then introduced by the dimmer switch **75** is $\alpha$=90°. The average input voltage will be 60 V and controller **120** will generate a maximum possible duty cycle D=DMAX=0.6 to compensate for the lower input voltage. However, from the power supply **130**A point of view, the magnetizing voltage at the crest will still be an amplitude of

input voltage for which we calculated the maximum permissible duty cycle as D=0.415. The power supply **130**A would then be forced to work at the crest with an elevated duty cycle D=0.6 instead of D=0.415, which could mean the saturation of the magnetic components **280** and a power supply **130** failure. Accordingly, recognizing that PWM alone will not accomplish the desired stability under dimming conditions, to both draw sufficient current for proper dimmer operation and provide the desired lighting output, the exemplary embodiments provide another, second control mechanism for powering a switching power supply **130** from a dimmer switch **75** for a stable interface of the dimmer switch **75** and switching power supply **130**.

A first control method is based on adjustment of the duty cycle based on average input voltage with maximum average duty cycle DMAX preselected at minimum input voltage and stored in the controller **120**A (or its memory or memory **160**). For that predetermined or preselected DMAX value, another maximum parameter of the switching power supply **130** is predetermined or otherwise preselected, namely, the maximum volt-seconds ("VSECMAX") at the crest or peak of the minimum input voltage and stored in the controller **120** (or its memory or memory **160**). In accordance with various exemplary embodiments, the switching power supply **130**A is enabled to operate using a range of input voltages, while the operational duty cycle is maintained below DMAX and the same operational volt-seconds are kept below maximum stored volt-seconds VSECMAX. Accordingly, the switching power supply **130**A operates with a potentially constant or adjustable duty cycle to generate a high power factor and it further switches to the volt-seconds limit whenever the duty cycle is excessive (i.e., within a predetermined range of DMAX) for the maximum preselected value of volt-seconds VSECMAX. Implementation of this second inventive regulation mechanism of the first control method may be done by measuring input voltage and integrating it (e.g., within the controller **120**A, using an integrator, not separately illustrated) during the on time of the switch **285** of the switching power supply **130**A (and volt-seconds may also be obtained through a feed forward technique, not shown on FIG. **17**). It also can be implemented by a switch current measurement, Ipeak control, using sensor **125**B**1** illustrated in FIG. **17**. Rather than using a maximum volt-seconds VSECMAX parameter, another alternative control methodology for the second tier of this two-tiered control methodology will utilize a peak current level ("IP") parameter, either the peak current level of the primary inductor of transformer **280** or the output peak current level, to adjust the power provided to LEDs **140** under dimming conditions.

FIG. **18** is a flow diagram of a second exemplary method embodiment in accordance with the teachings of the present disclosure, and provides a useful explanation and summary of the two-tiered control methodology, using either the maximum volt-seconds VSECMAX parameter or the peak current level ("IP") parameter. Beginning with start step **400**, the method determines an input voltage, step **405**. Using the determined or sensed input voltage, the method determines a duty cycle D for pulse width modulation, step **410**, which is less than (or equal to) the maximum duty cycle DMAX, to provide the selected or predetermined average output current level, IAV. The switching power supply is then switched using the duty cycle D, step **415**, providing the selected or predetermined average output current level, IAV. The method then determines whether the duty cycle D is within a predetermined range of (or substantially equal to) the maximum duty cycle DMAX, step **420**, and if so, transitions to current pulse mode (step **425**), and if not, and the method is to continue (step **430**), iteratively returns to step **405**, adjusting the duty cycle D as may be needed based on the sensed input voltage to provide the selected or predetermined average output current level, IAV, and continuing to provide PWM for the switching power supply **130**, **130**A. When the duty cycle D is within the predetermined range of (or substantially equal to) the maximum duty cycle DMAX, current pulse mode is implemented, step **425**, providing a current pulse with a dynamically adjustable or varying peak current IP (either the peak current level of the primary inductor of transformer **280** or the output peak current level), to increase the output current level during a selected interval, up to a maximum peak current level ("IMAX"), to maintain the output current (usually the selected or predetermined average output current level, IAV) above a predetermined or selected minimum level, to maintain sufficient current for the LEDs **140** to emit light, and simultaneously allow a dimming effect. Alternatively, in step **425**, current pulse mode is also implemented, step **425**, providing a current pulse with a dynamically adjustable or varying peak current IP (either the peak current level of the primary inductor of transformer **280** or the output peak current level), to increase the output current level during a selected interval, up to a maximum volt-seconds VSECMAX parameter, to maintain the output current (usually the selected or predetermined average output current level, IAV) above a predetermined or selected minimum level, to maintain sufficient current for the LEDs **140** to emit light, and simultaneously allow a dimming effect. When the method is to continue, step **430**, the method returns to step **405** and iterates, and otherwise, the method may end, return step **435**.

The duty cycle control, peak current control, and/or maximum volt-seconds VSECMAX control is implemented by the controller **120**, **120**A, which may dynamically increase or decrease the duty cycle D to maintain a selected or predetermined average output current ("IAV"), up to the maximum duty cycle DMAX. Accordingly, if or when the apparatus **100** (and any of its variations **100**A-**100**G) and system **105** (and any of its variations **105**A-**105**G) is coupled to a dimmer switch **75** and the user adjusts the dimmer switch to provide dimming, the duty cycle is dynamically adjusted and increased up to the maximum duty cycle DMAX, after which point the average output current to LEDs **140** may begin to decrease, and the output light emission is dimmed. The controller **120**, **120**A, however, will transition to the additional, current pulse mode, and maintain the allowable peak current (amplitude) (i.e., up to a predetermined or selected maximum peak current or maximum volt-seconds VSECMAX parameter) to support sufficient current to the LEDs **140** such that light continues to be provided, and does not become so low that the LEDs **140** effectively shut off and stop emitting light. In these various embodiments, a dimmer switch **75** is automatically accommodated, without any need for additional or separate detection of such a dimmer. A significant advantage of the first control method is that no additional current is utilized and, therefore, there are no additional corresponding power losses as found in the prior art.

The controller **120**, **120**A also functions as an adaptive interface (circuit **230**) to implement the protective mode of operation. Using any of the various sensors **125**, the controller may determine that while there is incoming power from a dimmer switch **75** or other switch, for example and without limitation, the output current (e.g., through the LEDs) is too high (e.g., indicative of a short circuit), or too low or nonexistent (indicative of an open circuit), or may detect other faults within any of the other various components. In these circumstances, the controller **120**, **120**A may provide a low power mode, taking sufficient power to maintain an on state of

circuitry such as the controller **120**, or may determine to shut down the apparatus **100**, **100**A-G, and/or the switching power supply **130** completely.

FIG. **19** is a flow diagram of a third exemplary method embodiment in accordance with the teachings of the present disclosure, by keeping the dimmer switch **75** operating stably but just at the edge or border of potentially becoming unstable, such as by having flicker or other triggering issues. For example, and as illustrated above in FIGS. **6** and **7**, there are a wide variety of types of dimmer instability or improper performance, such as (without limitation): (1) the dimmer switch **75** does not turn on within a half cycle of AC **35** being provided; (2) the dimmer switch **75** turns on more than one time within a half cycle of the AC **35**; (3) following a zero crossing and conducting, a forward dimmer switch **75** does not turn off at a next AC line voltage zero crossing; (4) a reverse dimmer switch **75** does not turn on following the first AC zero crossing; (5) the phase angle $\alpha$ is changing from one half cycle to another with different signs of changes, suggestive of the existence of oscillations. Stable operation of a dimmer switch **75** may be characterized using opposing criteria, such as (without limitation): (1) the dimmer switch **75** turns on once during each half cycle; (2) the dimmer switch **75** turns off (on) at AC zero crossings; and/or (3) the phase angle $\alpha$ is changing monotonically. Using any of the various sensors **125**, the controller **120** may be utilized to detect any of these features of improper or proper operation, such as using a voltage sensor **125**A to detect the voltage changes indicative of the dimmer switch **75** turning on multiple times during a half cycle, or not turning off at the appropriate time, for example, and without limitation.

Referring to FIG. **19**, the method begins, start step **500**, with the system **105** being powered on, such as by applying AC voltage **35** to the dimmer switch **75**, and with adaptive interface circuits **115** set to their default levels as discussed above, step **505**, such that sufficient current levels are drawn through the dimmer switch **75**. Voltage or current levels are monitored, step **510**. When the voltage or current levels indicate the presence of a dimmer switch, step **515**, the method determines whether the dimmer switch is functioning properly or improperly, such as by detecting the presence of flicker, step **520**. For example, a dimmer switch **75** may be present and also functioning properly, due to, for example, the presence of other loads in parallel with the system **105**, with sufficient current being drawn by all of the loads to maintain proper operation of the dimmer switch **75**. Further, different dimmer switches **75** may function improperly (or properly) at different holding or latching currents, such that some dimmer switches **75** may function properly and others improperly for the same LEDs **140** and, therefore, it may be necessary or desirable to detect flickering. Accordingly, when the method determines that the dimmer switch **75** is functioning improperly in step **520**, such as by detecting the presence of flicker, the method regulates the current from the dimmer switch **75** during selected intervals, step **525**, such as through control of any of the various adaptive interface circuits discussed above, and also as discussed below.

Another alternative may be utilized to diminish power consumption. When no dimmer switch **75** is present in step **515**, or is functioning properly in step **520**, the controller **120** may be utilized to decrease the current (and power) drawn by the adaptive interface circuits **115** in their default modes, determining whether any adaptive interface circuits **115** with power dissipation are active, step **530**. If so, and if the dimmer switch **75** has not exhibited instability, an active adaptive interface circuit **115** may be selected, its current parameters stored in memory **160** (and returned to if the dimmer switch **75** subsequently exhibits instability), and its power dissipation reduced, step **535**, such as by reducing the amount of current through an adaptive interface circuit **115**B, with these parameters stored as next parameters in memory **160**, for example. The method then returns to step **205** and iterates, continuing to monitor voltage and/or current levels and provide current regulation accordingly. Following steps **525**, **530**, or **535**, when the method is to continue (step **540**), the method returns to step **510** and iterates, continuing to monitor voltage and/or current levels and provide current regulation accordingly, and otherwise (such as when the system **105** is turned off) the method may end, return step **545**.

For example, in this exemplary methodology, using dimmer status sensor **125**C or a voltage sensor **125**A, the exemplary apparatus **100**G detects the presence of a dimmer switch **75**. When a dimmer switch **75** is detected, the controller **120** and one or more adaptive interface circuits (e.g., **115**B and **115**D, or any other of the illustrated interface circuits) provide one or more of the following substantially matching electrical environments to the dimmer switch **75**: (1) a small matching impedance to the dimmer switch **75** triggering circuit, using adaptive interface circuit **115**B controlled by controller **120**; (2) supports greater than holding current of the dimmer switch **75** when the bootstrap circuit **115**G is active and charging a VCC capacitor (in block **290**), which thereby also constitutes an adaptive interface circuit **115** controlled by controller **120**; (3) adjusts minimum power from the dimmer switch **75** at gradual or soft start of the switching power supply **130**, also using adaptive interface circuit **115**B controlled by controller **120**; (4) provides a matching small impedance to the dimmer switch **75** triggering circuit by keeping the duty cycle D (of the switching power supply **130**) close to 1, also under control of the controller **120**; and/or (5) shaping the current of the dimmer switch **75** in the resonant process, using one or more of adaptive interface circuits **115**D, **115**E, **115**F.

The controller **120**, which may be embodied using one or a plurality of controllers or other comparable circuits, is typically configured to compare the sensed output voltage and current levels to corresponding predetermined voltage and current values, which may be programmed and stored in memory **160**, or which may be obtained from memory **160** (such as through a look-up table) based upon other sensed values, such as sensed input voltage levels. Following such comparisons, an error signal or error level is determined, such as a difference between the sensed and predetermined levels, and corresponding feedback provided, such as to increase or decrease output voltage or current levels, in a first mode, through modulating the on-time (on-time pulse width) of the power switch **285** at a selected switching frequency, or at a variable switching frequency, which is generally at a substantially higher frequency than the AC line frequency, and in a second mode, by modulating the peak current levels.

Several novel features are implemented in the apparatus **100** (and any of its variations **100**A-**100**M), system **105** (and any of its variations **105**A-**105**M), and controller **120** embodiments. First, the adaptive interface circuits **115** independently enable operation with a phase-modulated dimmer switch **75**, without unwanted flicker and premature start-up problems of the prior art. Second, the adaptive interface circuits **115** provide control based on a combination of both the state of the dimmer switch **75** and the state of the switching power supply **130**. Third, a resonant mode is introduced with input current shaping or control during dimmer switch **75** turn on. Fourth, a PWM control is implemented, as a first part of a two-part control method, having a dynamic and adjustable maximum duty cycle DMAX, based or dependent on the

(sensed) input voltage, having a theoretical dynamic range of zero to one hundred eighty degrees, and accommodating a wide range of potentially varying input voltages. Fifth, a current pulse mode is implemented, as a second part of the two-part control method, having a variable and dynamically adjustable peak current level, for either the primary inductor peak current level or the output peak current level, or up to a maximum volt-seconds VSECMAX parameter.

Additional advantages of the exemplary embodiments of the present disclosure are readily apparent. The exemplary embodiments allow for solid state lighting, such as LEDs, to be utilized with the currently existing lighting infrastructure and to be controlled by any of a variety of switches, such as phase-modulating dimmer switches, which would otherwise cause significant operation problems. The exemplary embodiments further allow for sophisticated control of the output brightness or intensity of such solid state lighting, and may be implemented using fewer and comparatively lower cost components. In addition, the exemplary embodiments may be utilized for stand-alone solid state lighting systems, or may be utilized in parallel with other types of existing lighting systems, such as incandescent lamps. The exemplary embodiments essentially may work with any high-impedance load and/or anything drawing comparatively low current through a dimmer switch.

The various methodologies described above may also be combined in additional ways. For example, dimmer detection is not required, and instead, a series element may be programmed to switch at predetermined intervals to accommodate a dimmer switch, or also as described above with reference to FIGS. **9** and **10**, switching duty cycles may be determined from input parameters, such as sensed input voltage levels. In addition, when dimmer detection may be utilized, different strategies are available, such as blocking current to prevent capacitors from charging, such as through a series current control element, or providing current bypassing, such as through an adaptive current control element.

A wide variety of control methodologies and alternative adaptive interface circuits **115** have been illustrated to implement the proposed method of interfacing of a dimmer switch and switching power supply by modulating dimmer current and further by shaping dimmer current in a resonant process. The present disclosure is to be considered as an exemplification of the principles of the claimed subject matter and is not intended to limit the claimed subject matter to the specific embodiments illustrated. In this respect, it is to be understood that the claimed subject matter is not limited in its application to the details of construction and to the arrangements of components set forth above and below, illustrated in the drawings, or as described in the examples. Methods and apparatuses consistent with the claimed subject matter are capable of other embodiments and of being practiced and carried out in various ways.

Although the claimed subject matter has been described with respect to specific embodiments thereof, these embodiments are merely illustrative and not restrictive of the claimed subject matter. In the description herein, numerous specific details are provided, such as examples of electronic components, electronic and structural connections, materials, and structural variations, to provide a thorough understanding of the embodiments. One skilled in the relevant art will recognize, however, that an embodiment can be practiced without one or more of the specific details, or with other apparatus, systems, assemblies, components, materials, parts, etc. In other instances, well-known structures, materials, or operations are not specifically shown or described in detail to avoid obscuring aspects of the embodiments. In addition, the various figures are not drawn to scale and should not be regarded as limiting.

Those having skill in the electronic arts will recognize that the various single-stage or two-stage converters may be implemented in a wide variety of ways, in addition to those illustrated, such as flyback, buck, boost, and buck-boost, for example, and without limitation, and may be operated in any number of modes (discontinuous current mode, continuous current mode, and critical conduction mode).

Reference throughout this specification to "one embodiment," "an embodiment," or a specific "embodiment" means that a particular feature, structure, or characteristic described in connection with the embodiment is included in at least one embodiment of the present disclosure and not necessarily in all embodiments, and further, are not necessarily referring to the same embodiment. Furthermore, the particular features, structures, or characteristics of any specific embodiment of the present disclosure may be combined in any suitable manner and in any suitable combination with one or more other embodiments, including the use of selected features without corresponding use of other features. In addition, many modifications may be made to adapt a particular application, situation, or material. It is to be understood that other variations and modifications of the embodiments described and illustrated herein are possible in light of the teachings herein.

It will also be appreciated that one or more of the elements depicted in the figures can also be implemented in a more separate or integrated manner, or even removed or rendered inoperable in certain cases, as may be useful in accordance with a particular application. Integrally formed combinations of components are possible. In addition, use of the term "coupled" herein, including in its various forms such as "coupling" or "couplable," means and includes any direct or indirect electrical, structural, or magnetic coupling, connection or attachment, or adaptation or capability for such a direct or indirect electrical, structural or magnetic coupling, connection, or attachment, including integrally formed components and components which are coupled via or through another component.

As used herein for purposes of the present disclosure, the term "LED" and its plural form "LEDs" should be understood to include any electroluminescent diode or other type of carrier injection- or junction-based system which is capable of generating radiation in response to an electrical signal, including without limitation, various semiconductor- or carbon-based structures which emit light in response to a current or voltage, light-emitting polymers, organic LEDs, and so on, including within the visible spectrum, or other spectra such as ultraviolet or infrared, of any bandwidth, or of any color or color temperature.

A "controller" or "processor" may be any type of controller or processor, and may be embodied as one or more controllers, configured, designed, programmed, or otherwise adapted to perform the functionality discussed herein. As the term controller or processor is used herein, a controller or processor may include use of a single integrated circuit ("IC"), or may include use of a plurality of integrated circuits or other components connected, arranged, or grouped together, such as controllers, microprocessors, digital signal processors ("DSPs"), parallel processors, multiple core processors, custom ICs, application specific integrated circuits ("ASICs"), field programmable gate arrays ("FPGAs"), adaptive computing ICs, associated memory (such as RAM, DRAM, and ROM), and other ICs and components. As a consequence, as used herein, the term controller (or processor) should be understood to equivalently mean and include a

single IC, or arrangement of custom ICs, ASICs, processors, microprocessors, controllers, FPGAs, adaptive computing ICs, or some other grouping of integrated circuits which perform the functions discussed below, with associated memory, such as microprocessor memory or additional RAM, DRAM, SDRAM, SRAM, MRAM, ROM, FLASH, EPROM, or E2PROM. A controller (or processor) (such as controller **120**), with its associated memory, may be adapted or configured (via programming, FPGA interconnection, or hard-wiring) to perform described methodology, as discussed below. For example, the methodology may be programmed and stored in a controller **120** with its associated memory (and/or memory **160**) and other equivalent components as a set of program instructions or other code (or equivalent configuration or other program) for subsequent execution when the processor is operative (i.e., powered on and functioning). Equivalently, when the controller **120** is implemented in whole or part as FPGAs, custom ICs and/or ASICs, the FPGAs, custom ICs or ASICs also may be designed, configured and/or hard-wired to implement described methodology. For example, the controller **120** may be implemented as an arrangement of controllers, microprocessors, DSPs, and/or ASICs, collectively referred to as a "controller," which are respectively programmed, designed, adapted, or configured to implement the methodology of the disclosure, in conjunction with a memory **160**.

The memory **160**, which may include a data repository (or database), may be embodied in any number of forms, including within any computer or other machine-readable data storage medium, memory device, or other storage or communication device for storage or communication of information, currently known or which becomes available in the future, including, but not limited to, a memory integrated circuit ("IC"), or memory portion of an integrated circuit (such as the resident memory within a controller **120** or processor IC), whether volatile or non-volatile, whether removable or non-removable, including, without limitation RAM, FLASH, DRAM, SDRAM, SRAM, MRAM, FeRAM, ROM, EPROM, or E2PROM, or any other form of memory device, such as a magnetic hard drive, an optical drive, a magnetic disk or tape drive, a hard disk drive, other machine-readable storage or memory media such as a floppy disk, a CDROM, a CD-RW, digital versatile disk (DVD), or other optical memory, or any other type of memory, storage medium, or data storage apparatus or circuit, which is known or which becomes known, depending upon the selected embodiment. In addition, such computer-readable media includes any form of communication media which embodies computer-readable instructions, data structures, program modules, or other data in a data signal or modulated signal, such as an electromagnetic or optical carrier wave or other transport mechanism, including any information delivery media, which may encode data or other information in a signal, wired or wirelessly, including electromagnetic, optical, acoustic, RF or infrared signals, and so on. The memory **160** may be adapted to store various look up tables, parameters, coefficients, other information and data, programs or instructions, and other types of tables such as database tables.

As indicated above, the controller **120** is programmed, using software and data structures, for example, to perform described methodology Technology described herein may be embodied as software which provides such programming or other instructions, such as a set of instructions and/or metadata embodied within a computer-readable medium, discussed above. In addition, metadata may also be utilized to define the various data structures of a look-up table or a database. Such software may be in the form of source or object code, by way of example and without limitation. Source code further may be compiled into some form of instructions or object code (including assembly language instructions or configuration information). The software, source code, or metadata may be embodied as any type of code, such as C, C++, SystemC, LISA, XML, Java, Brew, SQL and its variations (e.g., SQL 99 or proprietary versions of SQL), DB2, Oracle, or any other type of programming language which performs the functionality discussed herein, including various hardware definition or hardware modeling languages (e.g., Verilog, VHDL, RTL) and resulting database files (e.g., GDSII). As a consequence, a "construct," "program construct," "software construct" or "software," as used equivalently herein, means and refers to any programming language, of any kind, with any syntax or signatures, which provides or can be interpreted to provide the associated functionality or methodology specified (when instantiated or loaded into a processor or computer and executed, including the controller **120**, for example).

The software, metadata, or other source code and any resulting bit file (object code, database, or look up table) may be embodied within any tangible storage medium, such as any of the computer or other machine-readable data storage media, as computer-readable instructions, data structures, program modules, or other data, such as discussed above with respect to the memory **160**, e.g., a floppy disk, a CD-ROM, a CD-RW, a DVD, a magnetic hard drive, an optical drive, or any other type of data storage apparatus or medium, as mentioned above.

In the foregoing description and in the figures, sense resistors are shown in exemplary configurations and locations; however, those skilled in the art will recognize that other types and configurations of sensors may also be used and that sensors may be placed in other locations. Alternate sensor configurations and placements are within the scope of the present disclosure.

As used herein, the term "DC" denotes both fluctuating DC (such as is obtained from rectified AC) and constant voltage DC (such as is obtained from a battery, voltage regulator, or power filtered with a capacitor). As used herein, the term "AC" denotes any form of alternating current with any waveform (sinusoidal, sine squared, rectified sinusoidal, square, rectangular, triangular, sawtooth, irregular, etc.) and with any DC offset and may include any variation such as chopped or forward- or reverse-phase modulated alternating current, such as from a dimmer switch.

With respect to sensors, we refer herein to parameters that "represent" a given metric or are "representative" of a given metric, where a metric is a measure of a state of at least part of the regulator or its inputs or outputs. A parameter is considered to represent a metric if it is related to the metric directly enough that regulating the parameter will satisfactorily regulate the metric. For example, the metric of LED current may be represented by an inductor current because they are similar and because regulating an inductor current satisfactorily regulates LED current. A parameter may be considered to be an acceptable representation of a metric if it represents a multiple or fraction of the metric. It is to be noted that a parameter may physically be a voltage and yet still represent a current value. For example, the voltage across a sense resistor "represents" current through the resistor.

In the foregoing description of illustrative embodiments and in attached figures where diodes are shown, it is to be understood that synchronous diodes or synchronous rectifiers (for example, relays or MOSFETs or other transistors switched off and on by a control signal) or other types of diodes may be used in place of standard diodes within the scope of the present disclosure. Exemplary embodiments presented here generally generate a positive output voltage with respect to ground; however, the teachings of the present disclosure apply also to power converters that generate a nega-

tive output voltage, where complementary topologies may be constructed by reversing the polarity of semiconductors and other polarized components.

For convenience in notation and description, transformers such as transformer **280** are referred to as a "transformer," although in illustrative embodiments, it behaves in many respects also as an inductor. Similarly, inductors can, under proper conditions, be replaced by transformers. We refer to transformers and inductors as "inductive" or "magnetic" elements, with the understanding that they perform similar functions and may be interchanged within the scope of the present disclosure.

Furthermore, any signal arrows in the drawings/figures should be considered only exemplary, and not limiting, unless otherwise specifically noted. Combinations of components of steps will also be considered within the scope of the present disclosure. The disjunctive term "or," as used herein and throughout the claims that follow, is generally intended to mean "and/or," having both conjunctive and disjunctive meanings (and is not confined to an "exclusive or" meaning), unless otherwise indicated. As used in the description herein and throughout the claims that follow, "a," "an," and the include plural references unless the context clearly dictates otherwise. Also, as used in the description herein and throughout the claims that follow, the meaning of in includes in and on unless the context clearly dictates otherwise.

The foregoing description of illustrated embodiments of the present disclosure, including what is described in the summary or in the abstract, is not intended to be exhaustive or to limit the claimed subject matter to the precise forms disclosed herein. From the foregoing, it will be observed that numerous variations, modifications and substitutions are intended and may be effected without departing from the spirit and scope of the disclosure. It is to be understood that no limitation with respect to the specific methods and apparatus illustrated herein is intended or should be inferred. It is, of course, intended to cover by the appended claims all such modifications as fall within the scope of the claims.

The invention claimed is:

**1**. An apparatus for power conversion, the apparatus couplable to a first switch coupled to an alternating current (AC) power source, the apparatus further couplable to solid state lighting, the apparatus comprising:

a switching power supply;

a first adaptive interface circuit comprising a resistive impedance coupled in series to a reactive impedance, wherein the first adaptive interface circuit is configured to conduct current from the first switch in a first current path in a default mode; and

a second adaptive interface circuit comprising a second switch coupled to the reactive impedance,

wherein the second adaptive interface circuit is configured to conduct current from the first switch in a second current path, and

wherein at least one of the first and second adaptive interface circuits is configured to damp oscillation when the first switch turns on.

**2**. The apparatus of claim **1**, wherein the first switch is a phase-modulated dimmer switch.

**3**. The apparatus of claim **1**, further comprising:

a controller coupled to the second switch, wherein the controller is configured to modulate the second switch to provide the second current path when the first switch turns on.

**4**. The apparatus of claim **3**, wherein the controller is further configured to modulate the second adaptive interface circuit to modulate a current of the first switch.

**5**. The apparatus of claim **1**, wherein the first adaptive interface circuit comprises a first resistor coupled in series to a first capacitor.

**6**. The apparatus of claim **5**, wherein the second adaptive interface circuit further comprises a transistor coupled in series to the first capacitor.

**7**. The apparatus of claim **6**, wherein the second adaptive interface circuit further comprises:

a voltage divider including a second resistor coupled in series to a third resistor, wherein the second and third resistors are further coupled to a gate of the transistor; and

a capacitor coupled in parallel to the third resistor.

**8**. The apparatus of claim **1**, wherein the solid state lighting comprises one or more light emitting diodes.

**9**. The apparatus of claim **1**, wherein the apparatus is couplable through a rectifier to the first switch.

**10**. A system for power conversion, the system couplable to a first switch coupled to an alternating current (AC) power source, the system comprising:

a switching power supply;

solid state lighting coupled to the switching power supply;

a first adaptive interface circuit comprising a resistive impedance coupled to a reactive impedance, wherein the first adaptive interface circuit is configured to conduct current from the first switch in a first current path in a default mode; and

a second adaptive interface circuit comprising a second switch coupled to the reactive impedance,

wherein the second adaptive interface is configured to conduct current from the first switch in a second current path, and

wherein at least one of the first and second adaptive interface circuits is configured to damp oscillation when the first switch turns on.

**11**. The system of claim **10**, wherein the first switch comprises a phase-modulated dimmer switch.

**12**. The system of claim **10**, further comprising a controller coupled to the second adaptive interface circuit, wherein the controller is configured to modulate the second adaptive interface circuit to provide a current path when the first switch turns on.

**13**. The system of claim **12**, wherein the controller is further configured to modulate the second adaptive interface circuit to modulate a current of the first switch.

**14**. The system of claim **10**, wherein the first adaptive interface circuit further comprises a first resistor coupled in series to a first capacitor.

**15**. The system of claim **14**, wherein the second adaptive interface circuit further comprises a transistor coupled in series to the first capacitor.

**16**. The system of claim **15**, wherein the second adaptive interface circuit further comprises:

a voltage divider comprising a second resistor coupled in series to a third resistor, the second and third resistors further coupled to a gate of the transistor; and

a capacitor coupled in parallel to the third resistor.

**17**. The system of claim **10**, wherein the solid state lighting comprises one or more light emitting diodes.

**18**. The system of claim **10**, further comprising a rectifier couplable to the first switch.

**19**. An apparatus for power conversion, the apparatus couplable to a first switch coupled to an alternating current (AC) power source, the apparatus further couplable to solid state lighting, the apparatus comprising:

a switching power supply; and

an adaptive interface circuit including:

a resistive impedance coupled in series to a reactive impedance; and

a second switch coupled to the reactive impedance to conduct current from the first switch in a second current path,

wherein the adaptive interface circuit is configured to:

damp oscillation when the first switch turns on; and

conduct current from the first switch in a first current path in a default mode.

**20**. The apparatus of claim **19**, wherein the first switch comprises a phase-modulated dimmer switch.

**21**. The apparatus of claim **19**, further comprising:

a controller coupled to the second switch, wherein the controller is configured to modulate the second switch to provide the second current path when the first switch turns on.

**22**. The apparatus of claim **19**, wherein the adaptive interface circuit comprises a first resistor coupled in series to a first capacitor.

**23**. The apparatus of claim **22**, wherein the adaptive interface circuit further comprises a transistor coupled in series to the first capacitor.

**24**. The apparatus of claim **23**, wherein the adaptive interface circuit further comprises:

a voltage divider comprising a second resistor coupled in series to a third resistor, the second and third resistors further coupled to a gate of the transistor; and

a capacitor coupled in parallel to the third resistor.

**25**. The apparatus of claim **19**, wherein the solid state lighting comprises one or more light emitting diodes.

**26**. The apparatus of claim **19**, wherein the apparatus further comprises a rectifier couplable to the first switch.

* * * * *